Childears, Jennifer L (DNREC)

From: Matthews, Jordan G. (DNREC)
Sent: Monday, May 16, 2022 9:39 AM
To: DAQ.DNRECtory
Subject: Fw: TR BIC-00097 Request for Additional Information Clarification
Attachments: TR_BIC-00097.pdf; 220510_DNREC Response Letter.pdf; Documents.zip

Please include the forwarded email and attached documents in the file for BioEnergy Development Group, LLC. This is a response to a request for additional information related to the permit application for Permit: APC-2022/0049-CONSTRUCTION. Please let me know if you have any questions. Thanks!

From: Anna Alvino <aalvino@bioenergydevco.com>
Sent: Friday, May 13, 2022 11:10 AM
To: Matthews, Jordan G. (DNREC) <Jordan.Matthews@delaware.gov>
Cc: Peter Ettinger <pettinger@bioenergydevco.com>; Christine McKiernan <cmckiernan@bioenergydevco.com>; Tressa Bathke <tbathke@bioenergydevco.com>; Brian Lyncha <blyncha@duffnet.com>
Subject: TR BIC-00097 Request for Additional Information Clarification
See attached transmittal and associated documents. Please contact Peter Ettinger should you have questions.

WE ARE SENDING YOU

☒Attached ☐Via:

DATE	FILE NAME	DESCRIPTION
5/12/2022	220510_DNREC Response Letter.pdf	Response Letter
5/12/2022	AQM-5 - revised 5-12-22.pdf	Emissions Information Application - revised
	Bioenergy Devco O&M Manual - RTO_EXAMPLE.pdf	Regenerative Thermal Oxidizer Manual Example
	Model3010BR OM.pdf	Model 3010 BR O&M
5/12/2022	RTO Emissions Calculations - revised 5-12-22.pdf	Thermal Oxidizer Emissions Calculations
	ZEF OM Manual Example.pdf	Flare O&M Manual Example

THESE ARE TRANSMITTED AS CHECKED BELOW:

☐For Approval	☐Approved as Submitted	☐Resubmit for approval
☐For Your Use	☐Returned for Corrections	☐Submit for distribution
☒As Requested	☐Bids due:	☐Other:

Warm Regards,
Anna Alvino
Support Specialist - Engineering
aalvino@bioenergydevco.com
BTS NORTH AMERICA
bts-biogas.com

Emissions Information Application

If you are using this form electronically, press F1 at any time for help

Process Information

1.	Number of Individual Pieces of Process Equipment in Process: **4**
2.	Number of Individual Control Devices in Process: **2**

Emissions Information for First Emission Point/Stack

3.	Emission Point Name: **Flare**
4.	Equipment ID Number for all Process Equipment and Control Devices Venting Through Emission Point/Stack: **Flare**
5.	Pollutant Emissions

If more than 15 pollutants are emitted at this Emission Point/Stack, attach additional copies of this page as needed.

	Pollutant Name (Specify VOCs and HAPs Individually in 5.10 through 5.18)	CAS Number (Not required for 5.1 through 5.10)	Maximum Uncontrolled Emission Rate at Design Capacity	Maximum Controlled Emission Rate at Design Capacity	Annual Potential to Emit (PTE)	Requested Permitted Annual Emissions
5.1.	Particulate Matter (PM)		**0 lbs/hour**	**0.00038 lbs/hour**	**0.0017** tons/year	**0.00047** tons/year
5.2.	PM_{10}		**lbs/hour**	**lbs/hour**	tons/year	tons/year
5.3.	$PM_{2.5}$		**lbs/hour**	**lbs/hour**	tons/year	tons/year
5.4.	Sulfur Oxides (SO_X)		**0 lbs/hour**	**0.00003 lbs/hour**	**0.0001** tons/year	**0.00004** tons/year
5.5.	Nitrogen Oxides (NO_X)		**0 lbs/hour**	**3.7 lbs/hour**	**16** tons/year	**4.5** tons/year
5.6.	Carbon Monoxide (CO)		**0 lbs/hour**	**16.8 lbs/hour**	**74** tons/year	**20.6** tons/year
5.7.	Total Volatile Organic Compounds (VOCs)		**0 lbs/hour**	**0.00028 lbs/hour**	**0.0012** tons/year	**0.00034** tons/year

Emissions Information for First Emission Point/Stack

5.8.	Total Hazardous Air Pollutants (HAPs)		**lbs/hour**	**lbs/hour**	tons/year	tons/year
5.9.	CO_2		**3,260 lbs/hour**	**9,489 lbs/hour**	**41,562** tons/year	**11,638** tons/year
5.10.	CO_{2e}		**lbs/hour**	**lbs/hour**	tons/year	tons/year
5.11.	**Methane (CH4)**		**4,043 lbs/hour**	**81 lbs/hour**	**354** tons/year	**99** tons/year
5.12.			**lbs/hour**	**lbs/hour**	tons/year	tons/year
5.13.			**lbs/hour**	**lbs/hour**	tons/year	tons/year
5.14.			**lbs/hour**	**lbs/hour**	tons/year	tons/year
5.15.			**lbs/hour**	**lbs/hour**	tons/year	tons/year

6. Provide Any Additional Information Necessary to Understanding the Emission Rates Provided Above:

Attach the Basis of Determination or Calculations for each Emission Rate provided above.

Emissions Information for Second Emission Point/Stack

7. Emission Point Name: **Thermal Oxidizer**

8. Equipment ID Number for all Process Equipment and Control Devices Venting Through Emission Point/Stack: **Thermal Oxidizer**

9. Pollutant Emissions

If more than 15 pollutants are emitted at this Emission Point/Stack, attach additional copies of this page as needed.

	Pollutant Name (Specify VOCs and HAPs Individually in 9.10 through 9.18)	CAS Number (Not required for 9.1 through 9.10)	Maximum Uncontrolled Emission Rate at Design Capacity	Maximum Controlled Emission Rate at Design Capacity	Annual Potential to Emit (PTE)	Requested Permitted Annual Emissions
9.1.	Particulate Matter (PM)		**0 lbs/hour**	**0.0051 lbs/hour**	**0.022** tons/year	**0.022** tons/year

Emissions Information for Second Emission Point/Stack

9.2.	PM_{10}		**lbs/hour**	**lbs/hour**	tons/year	tons/year
9.3.	$PM_{2.5}$		**lbs/hour**	**lbs/hour**	tons/year	tons/year
9.4.	Sulfur Oxides (SO_X)		**0 lbs/hour**	**0.0004 lbs/hour**	**0.002** tons/year	**0.002** tons/year
9.5.	Nitrogen Oxides (NO_X)		**0 lbs/hour**	**0.252 lbs/hour**	**1.10** tons/year	**1.10** tons/year
9.6.	Carbon Monoxide (CO)		**0 lbs/hour**	**0.056 lbs/hour**	**0.25** tons/year	**0.25** tons/year
9.7.	Total Volatile Organic Compounds (VOCs)		**0 lbs/hour**	**0.0037 lbs/hour**	**0.016** tons/year	**0.016** tons/year
9.8.	Total Hazardous Air Pollutants (HAPs)		**lbs/hour**	**lbs/hour**	tons/year	tons/year
9.9.	CO_2		**2,615 lbs/hour**	**2,696 lbs/hour**	**11,808** tons/year	**11,808** tons/year
9.10.	CO_{2e}		**lbs/hour**	**lbs/hour**	tons/year	tons/year
9.11.	**Methane (CH4)**		**38 lbs/hour**	**0.76 lbs/hour**	**3.3** tons/year	**3,3** tons/year
9.12.			**lbs/hour**	**lbs/hour**	tons/year	tons/year
9.13.			**lbs/hour**	**lbs/hour**	tons/year	tons/year
9.14.			**lbs/hour**	**lbs/hour**	tons/year	tons/year
9.15.			**lbs/hour**	**lbs/hour**	tons/year	tons/year

10. Provide Any Additional Information Necessary to Understanding the Emission Rates Provided Above:

Attach the Basis of Determination or Calculations for each Emission Rate provided above.

Emissions Information for Third Emission Point/Stack

11. Emission Point Name:

Emissions Information for Third Emission Point/Stack

12. Equipment ID Number for all Process Equipment and Control Devices Venting Through Emission Point/Stack:

13. Pollutant Emissions

If more than 15 pollutants are emitted at this Emission Point/Stack, attach additional copies of this page as needed.

	Pollutant Name (Specify VOCs and HAPs Individually in 13.10 through 13.18)	CAS Number (Not required for 13.1 through 13.10)	Maximum Uncontrolled Emission Rate at Design Capacity	Maximum Controlled Emission Rate at Design Capacity	Annual Potential to Emit (PTE)	Requested Permitted Annual Emissions
13.1.	Particulate Matter (PM)		**lbs/hour**	**lbs/hour**	tons/year	tons/year
13.2.	PM_{10}		**lbs/hour**	**lbs/hour**	tons/year	tons/year
13.3.	$PM_{2.5}$		**lbs/hour**	**lbs/hour**	tons/year	tons/year
13.4.	Sulfur Oxides (SO_X)		**lbs/hour**	**lbs/hour**	tons/year	tons/year
13.5.	Nitrogen Oxides (NO_X)		**lbs/hour**	**lbs/hour**	tons/year	tons/year
13.6.	Carbon Monoxide (CO)		**lbs/hour**	**lbs/hour**	tons/year	tons/year
13.7.	Total Volatile Organic Compounds (VOCs)		**lbs/hour**	**lbs/hour**	tons/year	tons/year
13.8.	Total Hazardous Air Pollutants (HAPs)		**lbs/hour**	**lbs/hour**	tons/year	tons/year
13.9.	CO_2		**lbs/hour**	**lbs/hour**	tons/year	tons/year
13.10.	CO_{2e}		**lbs/hour**	**lbs/hour**	tons/year	tons/year
13.11.			**lbs/hour**	**lbs/hour**	tons/year	tons/year
13.12.			**lbs/hour**	**lbs/hour**	tons/year	tons/year
13.13.			**lbs/hour**	**lbs/hour**	tons/year	tons/year
13.14.			**lbs/hour**	**lbs/hour**	tons/year	tons/year
13.15.			**lbs/hour**	**lbs/hour**	tons/year	tons/year

Emissions Information for Third Emission Point/Stack

14. Provide Any Additional Information Necessary to Understanding the Emission Rates Provided Above:

Attach the Basis of Determination or Calculations for each Emission Rate provided above.

Emissions Information for Fourth Emission Point/Stack

15. Emission Point Name:

16. Equipment ID Number for all Process Equipment and Control Devices Venting Through Emission Point/Stack:

17. Pollutant Emissions

If more than 15 pollutants are emitted at this Emission Point/Stack, attach additional copies of this page as needed.

	Pollutant Name (Specify VOCs and HAPs Individually in 17.10 through 17.18)	CAS Number (Not required for 17.1 through 17.10)	Maximum Uncontrolled Emission Rate at Design Capacity	Maximum Controlled Emission Rate at Design Capacity	Annual Potential to Emit (PTE)	Requested Permitted Annual Emissions
17.1.	Particulate Matter (PM)		**lbs/hour**	**lbs/hour**	tons/year	tons/year
17.2.	PM_{10}		**lbs/hour**	**lbs/hour**	tons/year	tons/year
17.3.	$PM_{2.5}$		**lbs/hour**	**lbs/hour**	tons/year	tons/year
17.4.	Sulfur Oxides (SO_X)		**lbs/hour**	**lbs/hour**	tons/year	tons/year
17.5.	Nitrogen Oxides (NO_X)		**lbs/hour**	**lbs/hour**	tons/year	tons/year
17.6.	Carbon Monoxide (CO)		**lbs/hour**	**lbs/hour**	tons/year	tons/year
17.7.	Volatile Organic Compounds (VOCs)		**lbs/hour**	**lbs/hour**	tons/year	tons/year
17.8.	Total Hazardous Air Pollutants (HAPs)		**lbs/hour**	**lbs/hour**	tons/year	tons/year
17.9.	CO_2		**lbs/hour**	**lbs/hour**	tons/year	tons/year

Emissions Information for Fourth Emission Point/Stack

17.10. CO_{2e}		**lbs/hour**	**lbs/hour**	tons/year	tons/year
17.11.		**lbs/hour**	**lbs/hour**	tons/year	tons/year
17.12.		**lbs/hour**	**lbs/hour**	tons/year	tons/year
17.13.		**lbs/hour**	**lbs/hour**	tons/year	tons/year
17.14.		**lbs/hour**	**lbs/hour**	tons/year	tons/year
17.15.		**lbs/hour**	**lbs/hour**	tons/year	tons/year

18. Provide Any Additional Information Necessary to Understanding the Emission Rates Provided Above:

Attach the Basis of Determination or Calculations for each Emission Rate provided above.

If there are more than four Emission Points/Stacks, attach additional copies of this form as needed.

Overall Process Emissions

19. Pollutant Emissions

If more than 15 pollutants are emitted from this Process, attach additional copies of this page as needed.

Pollutant Name (Specify VOCs and HAPs Individually in 19.10 through 19.18)	CAS Number (Not required for 19.1 through 19.10)	Maximum Uncontrolled Emission Rate at Design Capacity	Maximum Controlled Emission Rate at Design Capacity	Annual Potential to Emit (PTE)	Requested Permitted Annual Emissions
19.1. Particulate Matter (PM)		**0 lbs/hour**	**0.0055 lbs/hour**	**0.024** tons/year	**0.022** tons/year
19.2. PM_{10}		**lbs/hour**	**lbs/hour**	tons/year	tons/year
19.3. $PM_{2.5}$		**lbs/hour**	**lbs/hour**	tons/year	tons/year
19.4. Sulfur Oxides (SO_X)		**0 lbs/hour**	**0.00043 lbs/hour**	**0.0021** tons/year	**0.0020** tons/year
19.5. Nitrogen Oxides (NO_X)		**0 lbs/hour**	**4.0 lbs/hour**	**17.1** tons/year	**5.6** tons/year

Overall Process Emissions

19.6.	Carbon Monoxide (CO)		**0 lbs/hour**	**16.9 lbs/hour**	**74** tons/year	**21** tons/year
19.7.	Total Volatile Organic Compounds (VOCs)		**0 lbs/hour**	**0.0040 lbs/hour**	**0.017** tons/year	**0.016** tons/year
19.8.	Total Hazardous Air Pollutants (HAPs)		**lbs/hour**	**lbs/hour**	tons/year	tons/year
19.9.	CO_2		**5,875 lbs/hour**	**12,185 lbs/hour**	**53,370** tons/year	**23,446** tons/year
19.10.	CO_{2e}		**lbs/hour**	**lbs/hour**	tons/year	tons/year
19.12.	**Methane (CH4)**		**4,081 lbs/hour**	**82 lbs/hour**	**357** tons/year	**102** tons/year
19.13.			**lbs/hour**	**lbs/hour**	tons/year	tons/year
19.14.			**lbs/hour**	**lbs/hour**	tons/year	tons/year
19.15.			**lbs/hour**	**lbs/hour**	tons/year	tons/year

20. Provide Any Additional Information Necessary to Understanding the Emission Rates Provided Above:

Attach the Basis of Determination or Calculations for each Emission Rate provided above.

Minor New Source Review Information

21. Does the Process Have the Potential to Emit More Than Five Tons Per Year of Any Pollutant? ☒ YES ☐ NO

22. Is the Source New or Existing? ☒ NEW ☐ EXISTING
See Question 11 of AQM-1

If the Process has the Potential to Emit more than five tons per year of any pollutant, and is a New Source, a Control Technology Analysis pursuant to Regulation No. 1125 Section 4 must be conducted and attached to this application.

Major New Source Review Information

23. Does the Process Have the Potential to Emit More Than the Significance Level for Any Pollutant? *(Check All That Apply)*

- ☐ Greater Than 25 Tons Per Year of Particulate Matter (PM)
- ☐ Greater Than 15 Tons Per Year of PM_{10}
- ☐ Greater Than 10 Tons Per Year of $PM_{2.5}$
- ☐ Greater Than 40 Tons Per Year of Sulfur Dioxide(SO_2)
- ☐ Greater Than 25 Tons Per Year of Nitrogen Oxides (NO_X) in New Castle and Kent County
- ☐ Greater Than 100 Tons Per Year of Nitrogen Oxides (NO_X) in Sussex County
- ☐ Greater Than 100 Tons Per Year of Carbon Monoxide (CO)
- ☐ Greater Than 25 Tons Per Year of Total Volatile Organic Compounds (VOCs) in New Castle and Kent County
- ☐ Greater Than 50 Tons Per Year of Total Volatile Organic Compounds (VOCs) in Sussex County
- ☐ Greater Than 75,000 Tons Per Year of Equivalent Carbon Dioxide (CO_{2e})

If the Process has the Potential to Emit greater than any of the amounts listed above 7 DE Admin. Code 1125 Sections 2 and/or 3 apply. Contact the Department at (302) 323-4542 or (302) 739-9402 for additional information

Additional Information

24. Is There Any Additional Information Pertinent to this Application? ☒ YES ☐ NO

If YES, complete the rest of Question 24.

24.1. Describe: **Gas volume combusted in the flare will be limited to 840,960,000 SCF/year.**

May 12, 2022

Mr. Jordan Matthews, P.E.
State of Delaware – DNREC
Division of Air Quality
State Street Commons
100 W. Water Street, Suite 6A
Dover, DE 19904

Re: Bioenergy Development Group Request for Additional Information Clarification

Dear Mr. Matthews:

This letter is in response to the Department's letter dated May 5, 2022, requesting additional information regarding air permit applications submitted to the Department on January 12, 2022. The following responses correspond to the numbering system in the Department's request. Responses are indicated in **bold** font.

1. Item 5.a in the Department's March 30, 2022, request for additional information letter asked for clarification on which method would be used in monitoring the H2S and VOC/siloxane removal vessels for breakthrough. Your April 7, 2022, response letter included the following statement:

   Use of both methods provides redundancy in monitoring breakthrough in the H2S and VOC/siloxane removal vessels. The pressure drop can be monitored remotely via the HMI, while the sampling between vessels will be part of the operator's daily checklist.

   In addition to this response (and in response to other questions included in the request), the response letter included specifications of the proposed equipment as an attachment at the end of the letter. At the bottom of the page summarizing the specifications for the H2S removal media, the following statement was provided:

   040522 GJM – H2S removal expected to be 100% removal efficiency assuming proper monitoring (including calibration of online H2S analyzer) of breakthrough and change out frequency of media if and when H2S breakthrough is seen.

   Please provide the H2S analyzer manufacturer's recommended calibration and

maintenance requirements since that is an integral part of ensuring that the 100% removal efficiency of the pollutant is achieved.

For the VOC/siloxane adsorption media, the April 7, 2022, response letter proposed weekly sampling between the in-series vessels by use of "draeger tube or portable gas analyzer". No calibration or maintenance information is required if draeger tubes are the option used, but the manufacturer's calibration and maintenance recommendations are required if a portable gas analyzer is chosen as the monitoring method.

In addition to the calibration and maintenance recommendations for the monitoring equipment proposed for use in relation to the H2S and VOC/siloxane removal media, please provide the manufacturer-recommended maintenance recommendations for the proposed flare, RTO, and emergency generator equipment. This may include, but is not necessarily limited to, calibrations, tune-ups, inspections, or other routine preventative maintenance that is recommended to ensure proper operation of the proposed equipment.

Please see the attached data sheet for the H2S analyzer, as well as calibration and maintenance information from the supplier.

Example O&M manuals for flare and RTO are attached. These documents are strictly for example only. Equipment-specific O&M documentation will be provided following commissioning of the flare and RTO in Seaford.

2. Item 6 in the Department's March 30, 2022, request for additional information stated the following:

   The "Untreated biogas Characteristics" section of the "Filter Operations" page indicates that data from existing biogas plants was used in modeling of the project and estimating biogas quantity and characteristics. Please elaborate on the process that was used in estimating the quantity and composition of biogas expected to be generated in the proposed AD system as it relates to the type and quantity of feedstock proposed for use.

   The following statement was provided in the April 7, 2022, response letter:

   Bioenergy Devco has built and assisted operations and maintenance for approximately 240 plants since 1996. The expected biogas quantity and quality is derived from said operating experience. Given that no two plants are identical, we believe the parameters stated in the air permit applications represent the best available information and are most representative of future operating conditions.

Considering that this source is unique, I believe this explanation is acceptable with the condition that emissions from the RTO are tested upon startup of the equipment. The specific requirements related to testing will be specified in the draft permit.

Aside from ensuring compliance with the permit's emission limitations, during the April 25, 2022, meeting we discussed the methods by which estimated emissions from the process would be calculated. It is my understanding through our conversation that emissions from natural gas combustion in the RTO and flare will be estimated through the measurement of fuel flow to each source and using the AP-42 emission factors submitted in the permit application.

Emissions generated from the combustion of tailgas by the flare shall be calculated by measuring the flow of that gas stream and using the emission factors submitted in the permit application.

It is my understanding that emission factors for the combustion of tailgas in the RTO will be determined through measuring the flow of gas and emissions generated on the day(s) of testing. Because it will be impossible to separate the emissions generated from the combustion of natural gas from the emissions generated from the combustion of tailgas, any emissions in excess of the emissions expected from the combustion of natural gas will be attributed to the tailgas combustion unless an alternative method is determined.

I am not requesting any additional response to this item unless an alternative method of estimating emissions is proposed, or you have additional comments to add on the subject.

Revised estimated emissions attached.

3. The following questions and responses were asked and provided regarding the solid feedstock receiving area (Item 7.a in the March 30, 2022, letter requesting additional information):

   The March 30, 2022, request for additional information asked for "The sequence of events involved in the unloading and transfer of solid feedstock and an estimated residence time of material in the area prior to transfer into the pre-tanks." The April 7, 2022, letter to the Department provided the following response:

   Solid deliveries will enter the building, back in, and offload onto the walking floor area. The feedstock is then immediately conveyed and mixed with liquid feedstocks before being pumps to pre-tanks. The unloading and processing of a single load is approximately 30 minutes.

The March 30, 2022, request for additional information letter also asked for "A plan of action in the event that equipment malfunction, for example, prevents the unloading and transfer of solid feedstock from occurring in the manner in which it was designed." The April 7, 2022, letter to the Department provided the following response:

The design of the plant includes preventative measures to ensure that, in the event of an equipment malfunctions, the solid feedstock will be handled as designed:

There are three walking floor feeders. Typically, only one walking floor is required, or two may be required for maximum conditions. In the event one feeder malfunctions, there will be either one or two others available for use.

There will be an inventory of spare parts. In the event of an equipment malfunction, the other feeders will be used while maintenance is being done on the malfunctioning part.

I feel that these responses are acceptable but, as discussed during the April 25, 2022, meeting, I am proposing that requirements to prohibit the stockpiling of feedstock and requiring the stoppage of feedstock receipt and/or shutdown of receiving area ventilation system in the event that there is an unplanned malfunction of the feedstock transfer system that prevents feedstock from being transferred to the pre-tanks.

In lieu of an estimate of emissions from this and other processes, I am also proposing requirements to conduct daily qualitative odor surveys at areas of the site where odors could be generated. This shall include, but is not necessarily limited to, the solid feedstock receiving area, feedtank separator, and any other locations where feedstock or digestate could reasonably be vented to the atmosphere. In the event that excessive odors are observed, corrective action and fenceline odor surveys would be triggered.

As discussed during the April 25, 2022, meeting, the frequency of the odor surveys may be reduced in response to the findings of emissions testing or due to the lack of odors identified over an extended period of conducting the surveys. **No additional response to this item is required** unless there are any proposed alternatives to conducting these surveys, or additional comments to add on the matter.

4. The following question and response were asked and provided regarding the feedtank separators portion of the process (Item 7.b in the March 30, 2022, letter requesting additional information):

In the March 30, 2022, request for additional information I stated that it was my "understanding that filters will be implemented to control odors". I indicated this understanding because of the following statement which was provided in the "Engineering Report":

The facility equipment that will have process odor control is mainly the feedtank separators prior to the solid separation of digestate downstream of the digesters. This equipment will have process filters to eliminate odors. Filters will be changed according to the maintenance requirements for correct functioning of the system. Changes will be done with the use of all required Personal Protective Equipment.

Additionally, the March 30, 2022, letter asked you to "quantify and submit the pre- and post- control emissions anticipated to be generated in this area along with the specifications of the filters proposed for use." The April 7, 2022, letter to the Department provided the following response:

In lieu of use of a filter(s) to control potential VOC emissions (odors), Bioenergy Devco proposes to sample/monitor potential VOC/odor emission sources within 6 months of achieving steady-state operations after plant startup. Once data is obtained, the data will be evaluated and controls will be added, if necessary to comply with applicable regulations.

This issue was discussed during the April 25, 2022, meeting and it was my understanding that filters are no longer being considered for use in this area of the process. Please provide written confirmation that this is the case and any additional information you feel is necessary.

I also agree that sampling emissions from this location in the process is the best method of understanding the air quality impact. Requirements to conduct testing of emissions following startup of the proposed equipment will be included in the draft permit. In the event that testing reveals emissions above the permitting threshold, an application for this emission source shall be submitted to the Department within thirty (30) days of receiving the test report, and additional controls may be required.

The solids separation equipment is located in the building, which will have an overall exhaust system for odor control. The exhaust system will be sized appropriately for air flow in both the receiving area and the solid separation area. In the solid separation area liquid from the digesters flows to the solid separation feed tank which in turn feeds the disc press for the dewatering process. The disc press produces liquid and solid fractions. At this time, we do not plan to install filters on the solid separation tanks.

5. Item 8 in the Department's March 30, 2022, request for additional information letter asked for verification that the emissions estimated in the permit application were correct and that additional emissions of pollutants such as NOX, CO, and PM were not anticipated from the combustion of the tailgas in the RTO & flare. For the flare, some additional emissions (other than those generated from the combustion of natural gas) of CO and NOX were estimated from the combustion of tailgas. No additional emissions of these pollutants were estimated in RTO.

   The April 7, 2022, letter to the Department provided the following response:

   Additional emissions of NOx, CO or PM are not expected in the process of combusting the biogas.

   This document from the United Nations Framework Convention on Climate Change suggests that the composition of biogas from anaerobic digestion operations is typically "50 to 70% CH_4 and 30 to 50% CO_2, with traces of H_2S and NH_3 (1 to 5%)." The typical composition of biogas generated by anaerobic digestion systems defined in the document (including compounds like CH_4, CO_2, and H_2S) generally aligns with information included in the permit application. The one exception being that NH_3 has not been included in estimates of the biogas stream composition to date.

   During the April 25, 2022, meeting, the question of whether NH_3 could reasonably be a pollutant generated by the proposed AD system was asked. The answer provided was that NH_3 is not expected to be a pollutant generated by the proposed AD system. Please provide written confirmation that this is the case and any additional information you feel is necessary.

   Ammonia is not expected to be a pollutant generated by the proposed AD system.

6. The following questions and responses were asked and provided regarding the storage of solid digestate (Item 11 in March 30, 2022, letter requesting additional information):

   The request for additional information letter asked if "this storage bunker [would] be vented to the atmosphere?"

   The April 7, 2022, letter to the Department provided the following response:

   Yes.

   The Department's letter included the follow-up question, "if so, have potential emissions

from the storage of solid digestate been quantified?"

The April 7, 2022, letter to the Department provided the following response:

No potential emissions from the storage bunker have been quantified; however, based on operating experience at other similar facilities, no emissions are expected to exceed applicable regulatory thresholds.

This issue was addressed in the April 25, 2022, meeting between the Department and representatives of BioEnergy Devco. It is my understanding that the solid digestate storage bunker and the previously addressed feedtank separators section of the process are the same potential source of emissions. Please provide written confirmation that this is the case and any additional information you feel is necessary.

There is no separated solids storage bunker. There is a receiving trailer on site that collects dewatered solids from the disc press that are transported to compost daily.

7. Item 12 in the Department's March 30, 2022, request for additional information was in reference to information provided in the permit application regarding temperature excursions related to the H2S and VOC/siloxane carbon adsorption systems. I had interpreted these excursions to mean that there could be a period during startup of the AD system in which the temperature of the adsorption media would be outside of the range for the media to function properly and remove the intended pollutants. The following questions were asked in the March 30, 2022, request for additional information, and the italicized text in each sub-bullet includes the information provided in the April 7, 2022 response letter:

   - What causes the excursions?

     The media reacting with O2/H2O in the micropores.

   - Is the temperature of the H2S and VOC/siloxane adsorption beds continuously monitored and recorded?

     The temperature can be seen in upstream and downstream transmitters.

   - How long are the excursions expected to last?

     A few hours at most. The manufacturer has a method of "treating" and inerting the media prior to putting it online that has drastically reduced the temperature excursions that are typically seen. This includes introducing biogas after inerting and letting the gas assimilate with the vessel and media prior to introduction of live process gas. In the manufacturer's experience, this has reduced the length, as well as the temperature range of the excursion.

- What is the expected impact of the excursion on the composition of the gas stream that is eventually emitted to the atmosphere?

  Little to none, as the temperature is not changing the CH4/CO2 mixture.

- Are there any other expected instances where excursions are expected to occur?
  No, assuming proper procedures are followed regarding inerting.

This issue was discussed at the April 25, 2022, meeting between representatives of the Department and BioEnergy Devco. It is my understanding, based on responses provided during the meeting, that the excursion events are not expected to have an impact on the adsorption media's ability to fully remove the intended contaminants from the biogas stream. Please provide written confirmation that this is the case and any additional information you feel is necessary.

There is no expected impact to the adsorption media due to temperature excursions.

8. Unrelated to questions previously asked in the March 30, 2022, request for additional information, the proposed site drawings included in the application showed the presence of a "hot water boiler" on site. This issue was discussed at the April 25, 2022, meeting between representatives of the Department and BioEnergy Devco. During this meeting it was stated that the boiler was an existing boiler left at the site from the days when it operated for the purposes of Perdue's pellet and prill operations.

   While the exact size and type of fuel combusted by the boiler was not known during the meeting, it was estimated that the boiler was likely below the Department's permitting threshold for external combustion equipment. It was also stated that the boiler would likely be removed and replaced by a new boiler. In either case, Section 2.0 of Appendix A to 7 DE Admin. Code 1102 ("Permits") includes the following relevant exceptions from permitting requirements at minor sources:

   2.0 Except as provided for in 7 DE Admin. Code 1122, "Restriction on Quality of Fuel in Fuel Burning Equipment," external combustion fuel burning equipment which:
   2.1 Uses any fuel and has a rated heat input of less than 10 million British-Thermal Units (BTUs) per hour.
   2.2 Uses only natural gas, LP gas, or other desulfurized fuel gas and has a rated heat input of less than 15 million British-Thermal Units (BTUs) per hour.

9. Should the existing boiler, or any future replacements of the existing boiler, exceed the applicable threshold specified in Section 2.0 of Appendix A to 7 DE Admin. Code 1102, an application for its construction or operation shall be submitted, prior to

commencing operation of construction, as applicable.

Unrelated to questions previously asked in the March 30, 2022, request for additional information letter, it was noticed that no information regarding the on-site storage of finished biogas was provided in the application. This issue was discussed at the April 25, 2022, meeting between representatives of the Department and BioEnergy Devco. During this meeting it was indicated that no on-site biogas storage would occur downstream of the biogas upgrade system, and that all biogas produced would either be loaded onto trucks for off-site transfer or injected directly into a natural gas transmission pipeline, upon completion. Please provide written confirmation that this is the case and any additional information you feel is necessary.

There is no onsite biogas storage. The renewable natural gas from the biogas upgrading system will either be injected directly into a natural gas pipeline or compressed and offloaded into tube trailers for daily off-site transfer.

If you need any additional information, please contact me by e-mail at pettinger@bioenergydevco.com or by phone at (301) 943-4860.

Sincerely,

Peter Ettinger
Chief Strategy Officer

BIOENERGY DEVCO

50 STATE CIRCLE ANNAPOLIS, MD 21401
INFO@BIOENERGYDEVCO.COM

LETTER OF TRANSMITTAL
TR_BIC - 00097

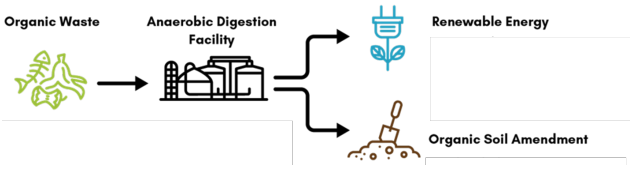

TO: JORDAN MATTHEWS

CC: PETER ETTINGER
CHRISTINE MCKIERNAN
TRESSA BATHKE
BRIAN LYNCHA

DATE: 05/13/2022
PROJECT: BIOENERGY INNOVATION CENTER (BIC)

RE: REQUEST FOR ADDITIONAL INFORMATION CLARIFICATION

WE ARE SENDING YOU

☒Attached ☐Via:

DATE	FILE NAME	DESCRIPTION
5/12/2022	220510_DNREC Response Letter.pdf	Response Letter
5/12/2022	AQM-5 - revised 5-12-22.pdf	Emissions Information Application - revised
	Bioenergy Devco O&M Manual - RTO_EXAMPLE.pdf	Regenerative Thermal Oxidizer Manual Example
	Model3010BR OM.pdf	Model 3010 BR O&M
5/12/2022	RTO Emissions Calculations - revised 5-12-22.pdf	Thermal Oxidizer Emissions Calculations
	ZEF OM Manual Example.pdf	Flare O&M Manual Example

THESE ARE TRANSMITTED AS CHECKED BELOW:

☐For Approval	☐Approved as Submitted	☐Resubmit for approval
☐For Your Use	☐Returned for Corrections	☐Submit for distribution
☒As Requested	☐Bids due:	☐Other:

COMMENTS:

Ship & Shore Environmental, Inc.

Regenerative Thermal Oxidizer

Ship & Shore Environmental, Inc.
2474 N Palm Drive
Signal Hill, CA 90755
(562) 997-0233
info@shipandshore.com
http://www.shipandshore.com

Bioenergy Devco

Bioenergy Devco
7950 Oceano Ave
Jessup, MD 20794
Project # 2021-786

Regenerative Thermal Oxidizer Manual (5,000 SCFM RTO)

Model No. SSE-5K-95X-RTO

Serial No. 2021-786-XXXX

SHIP & SHORE ENVIRONMENTAL, INC.
Clean Air Solutions for Industry

Table of Contents

1. General Information:
   - 1.1 Introduction
   - 1.2 System Specifications

2. Safety:
   - 2.1 Introduction
   - 2.2 Safety Awareness
   - 2.3 Safety during Shutdown and Maintenance
   - 2.4 General Safety Precautions
   - 2.5 Safety during Operation
   - 2.6 Lockout and Tag Procedure

3. System Operation:
   - 3.1 General Outline of Operation
   - 3.2 Operating Controls
   - 3.3 Operating the System

4. HMI:
   - 4.1 Screens
   - 4.2 Digital Data Logging

5. Alarms & Trouble Shooting:
   - 5.1 Introduction
   - 5.2 Service Help
   - 5.3 Alarms List
   - 5.4 Interlocks & Three-way Damper

6. Preventive Maintenance:

7. Check List

8. Spare Parts:
   - 8.1 Introduction
   - 8.2 Ordering Parts
   - 8.3 Recommended Spare Parts

9. Warranty

10. Appendixes:

10.1 Appendix A - RTO Mechanical Drawings
10.2 Appendix B - Electrical Drawings
10.3 Appendix C - Fans Certified Drawings and Curves
10.4 Appendix D - Burner Certified Drawing and Specifications
10.5 Appendix E - Mechanical Components
10.6 Appendix F - Electrical Components

1.0 - GENERAL INFORMATION

1.1 INTRODUCTION:

Increased public awareness of the need for air quality control has resulted in the United States Environmental Protection Agency air quality standards for most common air pollutants, notably hydrocarbons. As we know, the exhaust gases from many industrial processes contain Volatile Organic Compounds (VOCs.). When released into the atmosphere, VOCs contribute to the formation of harmful ozone and are health hazards.

This Volatile Organic Compound Abatement System (or VOC Abatement System) is designed to control such hydrocarbon emissions using a Ship & Shore Environmental, Inc. regenerative thermal oxidizer and a system of fans, filters, and ducts.

The Regenerative Thermal Oxidizer (RTO) is designed with a combustion chamber section operating at approximately 1500 ºF with a retention time of minimum 0.50 second or greater. Below the combustion chamber are heat storage sections containing a ceramic heat transfer media (two (2) heat storage sections total).

The exhaust gases from the combustion chamber travel through one (1) of the heat storage sections wherein they are cooled to between 170ºF-350ºF. As the gases flow through the section they raise the temperature of the ceramic heat transfer media.

Approximately every two (2) minutes the valve cycle time system causes the gas to flow in reverse so that the incoming air will pass through the just heated media and the combustion chamber exhaust gases travel through the other storage section. In this way the incoming gases will be heated to approximately 95% of the combustion chamber temperature.

Because of the high thermal efficiency of this system, relatively little fuel will be required to sustain the operating temperature. Often the fuel value of the incoming VOC will suffice.

The control panel consists of devices that are UL approved. A PLC (Programmable Logic Controller) supervises system's operating sequences. A burner flame relay (flame safeguard) monitors the burner limits and the burner flame with its ultraviolet scanner. A separate high temperature limit controller protects the unit from over temperature. A digital data recorder constantly records the combustion chamber temperature.

1.2 SYSTEM SPECIFICATIONS:

Air Pollution Control System, **Regenerative Thermal Oxidizer,** and RTO dual chambers system

Model No. SSE-5K-95X-RTO
Serial No. 2021-786-XXXX

Overall Dimensions (w/ fans): 10'- 6" Wide x 25' Long x 30' High

Unit Weight:	Approximately –30,000 lbs.
Internal Insulation:	6" Thick Ceramic Fiber
Construction:	Mild Steel
Stack:	18" Ø, 30' Tall, with two (2) 4" Ø test port
Inlet Duct Size:	18" Ø
Duct Fabrication:	3/16" - Carbon Steel (ASTM A-36)
Airflow:	5,000 SCFM
Operating Temperature:	1500ºF
Normal RTO inlet temp.:	70°F
Normal RTO Exhaust Temp.:	182-225°F
Inlet Static Pressure:	-2.0" WC
Destruction Efficiency:	98%
Thermal Effectiveness:	~95%
Retention Time:	0.5 Seconds Nominal
Valve Cycle Time:	45 - 220 seconds (Depending on Efficiency Set Point)
Media:	MLM 200 Media
Burner:	(1) 1 MMBTU/HR Kinedizer LE
Main Fumes Blower:	(1) Chicago Blower Main Fan w/ VFD Fan Type: Package Forced Draft, Airfoil, Direct Drive Fan Model: Design 1903 PFD Fan Size: 2214 Weight: 940lb

Fan Rating: 5,000 SCFM @ 25" SP, 3500 RPM, 25. BHP at 70°F, 250ft.
- Rotation: CW
- Discharge: Bottom Horizontal

Motor:
- 25 HP, 3600 RPM, 3Ph/60Hz/480V, TEFC

Combustion Air Blower:	(1) Chicago Blower Combustion Fan w/ VFD Fan Type: Pressure Blower Centrifugal Fans Fan Model: Design 53 Pressure Blower Fan Site: H1 Weight: 417 **Fan Rating:** 250 SCFM, 34" WC, 3495 RPM, 3.62 BHP at 70F, 250 Feet. - Rotation: CCW - Discharge: Up Blast **Motor:** - 5 HP, 3600 RPM, 3Ph/60Hz/480V TEFC
VFD:	SINAMICS G120X
Valve:	SSE Standard 18" Ø Pneumatically Controlled Poppet Valve
Gas Train:	1-1/2" UL & FM Gas Train
PLC:	Siemens S7-1200
HMI:	SIMATIC HMI TP900

Utilities:

Electrical:	480 Volts, 3 Phase, 60 Hertz, 80A Circuit Breakers, Total Load 54A
Natural Gas:	1000 CFH at 10 PSIG

Standards:

The following standards shall be recognized:

Piping:	ANSI B31.3
General:	OSHA
Electrical:	NEC
Burner & Gas Train:	NFPA 30, 54, 70, 86, 91
ACGIH:	Industrial Ventilation of Recommended Construction Standards
Ductwork:	SMACNA Round Industrial Duct Construction Standards

2.0 - SAFETY

2.1 INTRODUCTION:

The owners and operators of this pollution control equipment are responsible for establishing an effective safety program that is consistent with good management practices, laws, regulations, or ordinances. Specific requirements, precaution and hazards associated with the oxidizer must be provided and explained to all plant personnel and visitors. All involved personnel must assure safe performance in the operation and maintenance of the oxidizer.

2.2 SAFETY AWARENESS:

The best safeguard against injury or accidents is an informed, aware, and alert operator. Operator safety and the safety of others depend upon reasonable care and judgment. Most accidents are caused by failure to observe simple safety rules and precautions. Be aware of what is going on around your work area. Utilize safety equipment and protective clothing. Learn to recognize hazards before they become accidents. Avoid causing a dangerous situation. Unsafe or careless operation and maintenance can result in death or injury and/or costly damage to the oxidizer.

2.3 SAFETY DURING SHUTDOWN AND MAINTENANCE:

During shutdown and maintenance procedures it is imperative that the lead man on the job site lock out the power and controls. Padlocks with red tags that read “DANGER-DO NOT START” or “OUT OF SERVICE” should be used to lock out power, water, and fuel sources.

After servicing, all guards and access covers must be replaced. Remove the lockouts and tags only after ensuring all personnel are clear and aware that the system is being put back into service. Make sure all maintenance equipment is removed and no stray parts are left in any part of the system. Serious personal injury can occur if these procedures are not followed.

2.4 GENERAL SAFETY PRECAUTIONS:

The following list of hazards is divided into two categories:

A. IMMEDIATE HAZARD
B. POTENTIAL HAZARD.

SHIP & SHORE ENVIRONMENTAL, INC.
Clean Air Solutions for Industry

A. IMMEDIATE HAZARD

1. Faulty and/or incorrect wiring. Faulty wiring and incorrect wiring can cause severe electrical shock and death. All electrical maintenance and repair should be performed by qualified personnel and with the power shut off. Close the electrical enclosure before closing the main disconnect switch. Faulty wiring or a faulty component can cause an electrical explosion that could injure personnel. Never close the main disconnect switch while standing directly in front of the enclosure.
2. Never work on rotating or moving machinery (i.e. blowers, motors, RTO poppet valves) without shutting off and locking out power. Accidental startup of rotating machinery while someone is working on it can cause serious injury.
3. Do not operate the oxidizer with any of the access doors removed. Parts of the system are under positive pressure and hot gasses or particulate matter could cause serious injury to personnel.
4. Do not alter, by-pass, or remove any of the safety devices. All the safety devices in the system serve a specific purpose and protect the oxidizer from damage and personnel from injury.
5. Do not bypass or shorten the length of the purge cycle. The duration is factory set to NFPA standards to avoid a gas pocket build-up and potential explosion.
6. Never allow fumes or solvents into the oxidizer before it has reached operating temperature. Condensed solvents or coatings will become a fire or explosion hazard.

B. POTENTIAL HAZARDS:

1. At regular intervals check the gas pipe train for any gas leaks. Gas leaks can produce a severe fire or explosion hazard.
2. Do not operate the blowers without the drive guards securely in place. Do not try to remove the guards while the blower is operating or while power is available to the blower.
3. Do not meddle with the spark igniter, UV sensor, or ground electrode while the oxidizer is running. A shock hazard is present.
4. Avoid touching non-insulated ductwork on the oxidizer while it is running, it may be very hot.
5. Keep all flammable and explosive material away from the system.

2.5 SAFETY DURING OPERATION:

1. Make certain the **Flame Safety System** is operating properly.
2. Check to verify that all valves are working correctly and there is no leak in the gas train. Any leaks detected should be repaired right away.
3. All inlet motor valves and fresh air motor valves should always be in proper working condition.
4. Alarm (horn) should be in good working condition. **In case of emergency, the PLC will activate the alarm and shut off the burner and/or blowers as require.** Contact your technician or supervisor immediately to remedy the alarm condition.

Lockout & Tagout

SHIP & SHORE ENVIRONMENTAL, INC.
Clean Air Solutions for Industry

2.6 LOCKOUT - ENERGY CONTROL:

…….*SAFETY FIRST*…….

Ship & Shore Environmental, Inc. SPECIAL SAFETY CONDITIONS

Qualified Person Contractor must identify in writing a qualified individual(s) who will be responsible for coordinating energy isolation and lockout activities on behalf of the Contractor and for resolving issues regarding energy isolation and lockout.

Lockout Devices Where under applicable safety laws or regulations lockout or tagout must be applied, Contractor(s) must use safety lockout devices. Tags are used for identification purposes only and in conjunction with an appropriate lockout device. Contractor must not use a tag for energy isolation without a safety lockout device.
Contractor will use one safety lockout device on each energy source for each worker on the job. Each safety lockout device will have only one key. The key must be under the exclusive control of the worker who attached the safety lockout device. Contractor must use tags to identify each safety lockout device. The tag must identify the contractor name and the workers name.

Energy Source Identification/Placards Owner's machines and equipment may have on display a Lockout/Hazardous Energy Placard that identifies multiple or single energy sources and isolation devices. When working on machines or equipment bearing a Lockout/Hazardous Energy Placard in a manner such that energy isolation/lockout is required, Contractor(s) must review and follow the energy isolation instructions contained on the placard.

Safe Operating Procedures Contractor must review Owner's lockout procedure, including any safe operating procedures pertaining to affected machinery or equipment, before commencing energy isolation and lockout. Competent Person
- Contractor must employ a competent, knowledgeable person to evaluate the equipment and determine the proper method to safely de-energize the equipment and perform energy isolation.

Contractor Request for Energy Isolation Where Contractor believes that energy isolation of any operation, equipment, utilities, etc. is necessary to Contractor's activities, Contractor must submit a request for energy isolation in writing using the procedures specified by the owner. If the owner does not have a form, then Contractor must provide and use a form acceptable to the Owner. Where Owner's employees perform the energy isolation and lockout before releasing equipment to the contractor, Contractor must still apply its own lockout devices.

Safety Plan for Regenerative Thermal Oxidizer Confined Space Entry

CONFINED SPACE ENTRY AND OPERATIONAL PLAN

Ship & Shore Environmental, Inc. has established the following confined space policy and procedures. Supervisory employees are responsible to ensure that proper procedures are carried out in all phases of confined space entry operations.

Date:

Location:

Equipment:

Company:

Inspectors:

Scope of Work: The purpose of the RTO inspections is to check RTO interior and exterior for any sign of malfunctions or damage and to make sure all the equipment is in proper order. The exterior Inspections do not require any confined space entry; however, the interior inspections require confined space entry procedures as outlined below. Service Manager is responsible to see that the overall employee work procedures and equipment meet this policy Federal and California OSHA standards.

1. ***Personnel Safety Equipment:***

   - ☐ Safety Harness or lifelines
   - ☐ Gas Monitors
   - ☐ Respiratory Protection Devices
   - ☐ Communication systems

2. ***Testing of the Air:***

   Within confined spaces shall be performed prior to entry to determine oxygen content, toxic gas potential and flammable or explosive atmospheres.

   - ☐ Entry into a confined space is prohibited until initial testing of the atmosphere has been done from outside the space.

SHIP & SHORE ENVIRONMENTAL, INC.
Clean Air Solutions for Industry

- The tests performed shall include those for oxygen content, flammable/ combustible gases, and hydrogen sulfide

3. ***Air Quality Standards:*** If the space meets the following air quality standards then entry may be done without a SCBA or continuous airline with escape bottle:

   - Oxygen level between 19.5% - 23.5%
   - Flammable vapors below 10%* (note: this level could be a significant health risk depending on the type of vapors - any readings on combustible gas meter will need further evaluation if an employee is entering the space without respirator protection)
   - Hydrogen sulfide below the PEL of 10 ppm
   - Carbon Monoxide below the PEL of 35 ppm
   - Even under these conditions an entrant may be required to wear an air- purifying respirator for protection against other chemicals.

4. ***The Material Safety Data Sheets (MSDSs):*** Of all products and cleaning materials used in confined space must be reviewed before entry unless the products have already been covered with the employees in the routine hazard communication training. The MSDS must be available with the permit at the permit-required confined space entry area.

5. ***Lock-Out:*** Mechanical and electrical equipment installed in the confined space must be disconnected from its power source and locked out.

   - RTO Supply Fan Motor.
   - RTO Pneumatic.
   - RTO Main Control Panel.
   - RTO Combustion Blower.
   - RTO VFD.
   - Main Gas Shut-off Valve.

6. ***Communication***: With other entry team members by Mobile Radio, Telephone or other effective means is provided.

7. ***Safety Officer/Entry Supervisor:*** _____

8. ***Date:*** _____

3.0 - SYSTEM OPERATION

3.1 - GENERAL OUTLINE OF OPERATION:

The Regenerative Thermal Oxidizer (RTO) burns emissions from multiple sources in the facility.

The exhaust ducting of the processes is connected to the RTO. The exhaust duct to the RTO transports VOCs emitted during the process.

On start-up and shutdown of the RTO, the fumes are isolated from the RTO by means of an isolation damper. Process fumes are vented through the process damper located at the top of the RTO. A fresh air damper opens during start-up when fumes are not being received into the RTO, which provides fresh air for purging and ignition of the burner of the RTO.

The RTO burner is monitored by a flame safeguard that ensures that the burner is lit by detecting the ultra-violet light of the flame. The RTO temperature is controlled by PID controller in PLC program.

When the chamber thermocouple is greater than 1450ºF and differential temperature between stack and inlet is greater than 50ºF for 180 seconds, PLC generates RTO ready signal. Consequently, if the operator enables the "fume request" mode, the process damper closes, the isolation damper opens, and the fresh air damper closes or modulate based on the sequence. The process emissions are now accepted into the RTO. The whole process is tractable on HMI.

Once the fumes are introduced into the RTO, the main blower speed is controlled according to the measured inlet pressure. When fumes are not being accepted by the RTO, main blower runs at a pre-set frequency.

The valve is controlled through an electric actuator which is a part of the burner PID control loop. The electric actuator control signal, 4 to 20mA, is generated by PLC.

During normal operation, the RTO will run without any further operator control and all controls will be done automatically by PLC.

3.2 - OPERATING CONTROLS:

1. "VFD and Control Panels"

   Based on the size of the main blower we can have VFD Panel & Control Panel, for systems with main fan less than 30 HP the VFD panel is combined with control panel. Control panel energizes the combustion blower. In the control panel, there is a transformer for converting 575VAC to 120VAC that provides 120VAC for energizing control panel. The circuitry for the transformer and control panel is protected with miniature circuit breakers or fuses. The Variable Frequency Drive (VFD) panel energizes RTO main blower. Additionally, VFD panel receives control signal from control panel for driving the main blower at different frequencies. Programmable logic controller (PLC), human machine interface (HMI), Safety relay, UPS and other control components are located inside the control panel. The control panel is controlling the sequence of operation.

2. "Temperature Limit Controller"

   Temperature limit controller, located on the remote panel door, monitors the chamber center temperature. This instrument shuts down the RTO if the temperature in the combustion chamber exceeds the high set point. The instrument cannot be reset nor the RTO started up again until the temperature falls below its set point temperature.

3. "Human Machine Interface (HMI)"

   Human Machine Interface (HMI) is located on the control panel door. This device is a touch screen interactive user interactive interface. Through HMI, operator can control and monitor the whole process. Additionally, HMI can be used for troubleshooting and data analysis.

4. "Alarm Acknowledge"

   The "alarm acknowledge" push button is located on the control panel. When any alarm condition is present, the red light on the button begins blinking. There will be alarm horn in addition to visual alarm indication as well. The "alarm acknowledge" pushbutton should be pressed to silence the alarm horn. However, the red light on the button will stay on unless the alarm does not exist anymore. It is also possible to acknowledge alarms on HMI. Moreover, a detail explanation of the alarm will be displayed on the HMI alarm history screen.

5. “Emergency Stop”

   The “Emergency Stop” pushbutton is located on the control panel door and remote panel. This is a red pushbutton used in an emergency. If emergency stop is pressed, all the critical dampers will go to home position and burner management system will be disabled. Do not use this button to de-energize the system unless it is a real emergency, as there could be complications and/or damage to components due to the sudden uncontrolled stop. To reset the emergency stop, pull the button out away from the panel. Under normal operation the button should be pulled out away from the panel.

6. “RJ 45 Port”

   The RJ45 port is located on the control panel and can be used for accessing PLC and HMI without opening the panel. It is also possible to use this port for accessing logged data or ethernet based components.

7. “Power Light”

   The “Power Light” is located on the control panel door. The light will be on when control panel is energized.

8. “Remote Panel”

   This panel is located on the gas train. All the local components on the RTO itself are wired to remote panel. The “Remote Panel” is connected to the control panel via an Ethernet cable. Burner Management System (BMS), High Temperature Limit Controller and Remote I/O system are located inside remote panel.

3.3 - OPERATING THE SYSTEM:

1. RTO START-UP:

1. On the HMI, browse to "Startup & Shutdown" screen
2. Press the "Blowers start" button for energizing combustion blower and main fan
3. Press the "Burner" button to turn on RTO burner. Before igniting the burner, all the safety interlocks must be met. After purging the combustion chamber with fresh air, the burner ignition sequence will be conducted by a burner controller.
4. When RTO is ready to accept process fumes, the green light begins blinking. If the "Fume Mode" on HMI "Startup & Shutdown" screen is activated, RTO will begin accepting fumes by opening the process isolation damper.

2. RTO IDLE MODE:

This mode will automatically maintain the RTO chamber temperature at approximately 1,000°F when the RTO is offline. Idle mode will reduce the required time for heating up the RTO up to the ready temperature. This mode is designed for short shutdown periods such as weekends or holidays. To put the RTO on idle mode, follow the following steps:

1. On the HMI, browse to "Startup & Shutdown" screen
2. Disable the "Fume Mode" button
3. Press the "Idle Mode Enable" button

To disable idle mode, toggle the "Idle Mode" button.

3. RTO SHUTDOWN:

This mode will turn off the RTO fans automatically. In this mode, main blower and combustion blower will stay energized till the RTO center temperature reaches to a safe temperature. Thereafter, the PLC will automatically turn off the combustion blower and main blower. To put the RTO on shutdown mode, follow the following steps:

1. On the HMI, browse to "Startup & Shutdown" screen
2. Disable the "Fume Mode" button
3. Disable the "Burner Mode" button
4. Press the "Auto Shutdown Enable" button

To disable auto shutdown mode, toggle the "Auto Shutdown" button.

4.0 - Human Machine Interface (HMI)

4.1 HMI Screens

Human Machine Interface (HMI) is located on the control panel door. This device is a touch screen interactive user interactive interface. Through HMI, operator can control and monitor the whole process. Additionally, HMI can be used for troubleshooting and data analysis. The following is a list of the screens:

1) Process Overview
2) Startup & Shutdown
3) Trends
4) Alarms History
5) Maintenance (Digital Input)
6) Digital Output
7) Analog Input
8) Analog Output
9) TC Input
10) RTO Ethernet
11) RTO Set Points
12) Alarm Set Points

1. Process Overview:

This screen displays overview of the process including cylinder positions, vacuum pressure, cycle times, burner status, blowers' status, gas train status, temperatures, and fume sources status. Process overview screen is the main screen for tracking the RTO operation.

2. Startup & Shutdown:

To access this screen, you need to press "Startup & Shutdown" button. This screen can be used for tracking startup procedure. Moreover, through this screen operator can enable/disable idle mode and auto shut down mode. This screen also allows the operator to turn on/off the blowers, burner, and fumes.

3. Trends:

To access this screen, you need to press "Trends" button. "Retention Chamber" screen displays retention chamber center, chamber A and B real time temperature. This screen can also display temperature trends for "Inlet & Stack", "Hoppers & Inlet", "VFD Frequency", and "Inlet Pressure". Moreover, the operator can trace the temperature through time by using navigation buttons and cursor. It is also possible to jump into a specific time for checking the information.

4. Alarm History:

To access this screen, press "Alarm History" button. This screen displays a history of the occurred alarms. The operator can navigate through the alarms with the navigation buttons.

5. Maintenance (Digital Input):

To access "Digital Input" screen, press the "RTO Settings" button. This screen displays real time status of digital inputs. If an input is active, the input will be displayed in green color.

6. Digital Output:

To access this screen, press the "RTO Settings" button and on the top of the screen press "Digital Output". This screen displays real time status of digital outputs. If an output is active, the output will be displayed in green color. To control outputs manually, the operator needs to select the manual mode selector switch on HMI for the intended output. However, manual mode overrides PLC control which may result in a critical alarm. For this reason, this function is password protected.

7. Analog Input:

To access this screen, press the "RTO Settings" button and on top of the screen press "Analog Input". This screen displays real time status of analog signals connected to the PLC.

8. Analog Output:

To access this screen, press the "RTO Settings" button and on top of the screen press "Analog Output". This screen displays real time status of analog output signals from the PLC to the field devices. It is possible to manually control the outputs. However, it is not recommended since it will override the PLC control which may result in critical alarm. For this reason, this function is password protected. The PID parameters are displayed on this screen for each control feedback loop. These parameters are adjustable; however, they are password protected.

9. TC Input:

To access this screen, press the "RTO Settings" button and on top of the screen press "TC Input". This screen displays real time status of the thermocouples connected to the PLC card.

10. RTO Ethernet:

To access this screen, press the "RTO Settings" button and on top of the screen press "RTO Ethernet". This screen displays Main Fan & Combustion Blower VFD frequency.

11. RTO Set Points:

To access this screen, press the "Maintenance" button and on top of the screen press "RTO SPs". This screen displays RTO's operation set points. These set points are adjustable; however, they are password protected.

DANGER: CHANGING SETTINGS IN THE SETPOINTS SCREEN COULD RESULT IN DEATH OR INJURY AND/OR COSTLY DAMAGE TO THE OXIDIZER

12. Alarm Set Points:

To access this screen, press the "Maintenance" button and on top of the screen press "Alarm SPs". This screen displays RTO's alarm set points. These set points are adjustable; however, they are password protected.

DANGER: CHANGING SETTINGS IN THE SETPOINTS SCREEN COULD RESULT IN DEATH OR INJURY AND/OR COSTLY DAMAGE TO THE OXIDIZER.

4.2 – DIGITAL DATA LOGGING:

The following variables are being recorded every 60 seconds for two weeks on a SD card, installed on the HMI, in CSV format.

1. Retention Chamber Temperature
2. Fifteen Minute Absolute Average
3. Chamber "A" Temperature
4. Chamber "B" Temperature
5. Stack Temperature
6. Hopper "A" Temperature
7. Hopper "B" Temperature
8. Inlet Temperature
9. VFD Frequency
10. RTO Alarm History

Moreover, the following data is being recorded on a daily basis for one year (Incentive Files).

1. One Hour Average Center Temperature
2. One Hour Average Inlet Temperature
3. One Hour Average Stack Temperature
4. One Hour Average VFD Frequency

The data logged files are recorded on the HMI SD card. This data will be re-written every 4 weeks. To prevent any data loss, the customer should create a backup per Operational Manual instructions, preferably every week. Additionally, RTO alarm history is being recorded on the SD card. There are two options for downloading the logged data:

I. <u>Directly from the SD card</u>

Note: For this option, data logger must be stopped temporary.

1. On the HMI, browse to “Startup & Shutdown” screen
2. Log in is as operator
3. Disable data logging on HMI screen
4. Remove the SD card, and connect it to your computer
5. Copy the files to your computer
6. Put the SD card back to the HMI
7. Re-enable data logging on HMI screen **<u>(Very Important)</u>**

5.0 – ALARMS & TROUBLESHOOTING

5.1 - INTRODUCTION:

Included in this section is a general guide for determining the possible causes of a failure and possible solutions. This guide is not intended to be all-inclusive. Always consult the troubleshooting guide of vendor supplied equipment, such as, flame scanners, burner controls and temperature controls in addition to the instructions given here.

Do not alter the original settings established during startup without recording and consulting Ship & Shore Environmental. Follow all safety precautions listed in the safety sections of this manual.

DANGER: CHANGING SETTINGS IN THE CONTROL SETUP SCREEN COULD RESULT IN DEATH OR INJURY AND/OR COSTLY DAMAGE TO THE OXIDIZER.

5.2 SERVICE HELP:

At Ship & Shore Environmental, Inc., we are always committed to provide our customers with our best services available, either in troubleshooting or in new designs to increase the capacity of the unit to adapt to new production environments.

Our service number is (562) 997-0233,
8:30-4:30 Pacific Time Zone.

After hours call (562) 477-7557 or (562) 400-4439

Our E-mail is Service@ShipandShore.com

As you become more familiar with this system, you will be able to use the information contained in the troubleshooting section of this manual to solve many of the problems yourself.

Most of the time, just by monitoring the indicator lights, the alarms, and the operator interface, the operator will be able to identify the problem.

5.3 – ALARMS LIST

RTO communicates with operator through the HMI. There are several messages that may appear on the HMI. There are two types of messages which required operator attention. The following is a brief description on these categories:

Critical Alarm: In case of critical alarms, the PLC will generate visual and audio alarms. Additionally, the RTO will be shutdown. The alarm can be silenced by "alarm acknowledge" push button on control panel or "alarm silence" button on HMI. However, the alarm needs to be cleared before running the RTO again. In certain cases, it is required to reset the safety devices manually.

Warning Alarm: In case of warning, a message will be displayed on HMI. The issue should be cleared and after that the warning message will be cleared automatically. Based on the type of warning alarm, RTO may switch to fresh air until warning alarm is cleared.

The following is a list of possible alarms for **Bioenergy Devco**. Moreover, possible causes of the alarm and quick required actions are provided.

Message	Type	Possible Cause	Corrective Action
Combustion Blower Air Flow Fault	Critical Alarm	• Combustion blower air proving switch is not made	• Check the combustion blower switch & wiring • Check the combustion line for possible debris build up • Check the inlet filter & clean the filter regularly
Combustion Blower Air Pressure Switch Fault	Critical Alarm	• Combustion blower air proving switch is made without combustion blower running	• Check the combustion blower switch & wiring • Check for condensation or water in the switch
Poppet Extension Fault Poppet Retraction Fault	Critical Alarm	• Problem with proximity switches • Problem with poppet cylinder • Problem with internal shafts • Problem with shaft & cylinder moving too slow, not meeting timing set point on PLC	• Check proximity switches & wiring closest to Chamber B • Check/hear poppet cylinder internal air leakage or hose leak • Check speed control mufflers for debris build up & clean as required

SHIP & SHORE ENVIRONMENTAL, INC.
Clean Air Solutions for Industry

VFD Fault (Manual Reset)	Critical Alarm	• VFD is not running	• Check VFD panel • Write the error code on the VFD LCD screen. • Reset the VFD manually by pressing the reset button • Look up error code on VFD manual
Main Fan Air Flow Switch Fault	Critical Alarm	• Main fan air proving switch is not made	• Check the main fan switch, wiring & set point • Check for condensation/water in the switch
Main Fan Air Flow Pressure Switch Fault	Critical Alarm	• Main fan blower air proving switch is made without combustion blower running	• Check the main fan air pressure switch • Check for condensation/water in the switch
Low Compressed Air Fault	Critical Alarm	• Problem with the supplied compressed air from plant	• Check air pressure indicator on air cylinder tank meeting above 60 PSI • Check compressed air pressure switch on air line • Check air filters & air line for possible debris build up • Check air compressor inside plant
High Temperature Limit Controller Fault (Manual Reset)	Critical Alarm	• High temperature fumes from the plant (change in process) • Problem with the center thermocouple • Problem with burner control and/or mechanical linkage • Poppet cycle time is not correct	• Verify the plant process • Check the center thermocouple & wiring • Verify the RTO set points • Check that the burner modulates on low & high fire Please note: You will need to reset the temperature controller manually located on the top left corner of the control panel

Gas POC Switch Fault	Critical Alarm	• Slow open SSOV is not close	• Check gas safety shut off valves • Check the wiring
Thermocouple Broken Wire Fault	Warning Alarm	• Problem with thermocouple wiring loose or broken	• Check the thermocouples on the RTO & look for a disconnect or broken wire
Low Gas Pressure Switch Fault (Manual Reset)	Critical Alarm	• Low gas pressure switch is not made • Supplied gas pressure is not adequate	• Check the gas pressure & flow being supplied by utility company • Check setting on the low gas pressure • Check wiring on the switch • Check for condensation/water in the switch Please note: Operator may need to reset low gas pressure switch manually on gas train
High Gas Pressure Switch Fault (Manual Reset)	Critical Alarm	• High gas pressure switch is not made Supplied gas pressure is not adequate	• Check the gas pressure & flow being supplied by utility company • Check setting on the high gas pressure • Check wiring on the switch • Check for condensation/water in the switch
No Flame Detected Fault	Critical Alarm	• Problem with self-check UV scanner • Problem with burner pilot • Problem with ignition transformer • Problem with flame safeguard relay • Problem with ignitor • Problem with gas/air ratio to burner and/or butterfly valve (internal mechanism on burner)	• Check the UV scanner for carbon build up or moisture and clean lens with dry cloth • Check pilot solenoid valve • Check safety shut off valve • Check/test the burner actuator • Check the wiring on the actuator, UV scanner, transformer, safety shut off valve • Check/replace ignitor

SHIP & SHORE ENVIRONMENTAL, INC.
Clean Air Solutions for Industry

Low Fire Switch Fault	Critical Alarm	• Mechanical linkage is not meeting the low fire switch • Problem with low fire switch • Problem with burner actuator not moving/working • Problem with Natural Gas Pressure	• Check/test the burner actuator • Check the low fire switch • Check/adjust the linkage to meet the low fire switch • Check the wiring of switch & actuator • Check Natural Gas Pressure
Process Isolation Damper Fault	Critical Alarm	• Damper is not at the right position. • Damper is moving too slow • Problem with proximity/auxiliary switches	• Check the damper actuator • Check the proximity/auxiliary switches • Check the wiring
Fresh Air Damper Fault	Critical Alarm	• Damper is not at the right position • Damper is moving too slow • Problem with proximity switches	• Check the damper actuator • Check the proximity switches • Check the wiring
High Stack Temperature Fault	Critical Alarm	• Problem with thermocouple • High temperature fumes from the plant (change in process) • Poppet cycle time is not correct • Problem with unbalanced chamber temperature	• Check the thermocouple on the stack & wiring • Verify the plant process • Verify RTO set points
High Hopper (A or B) Temperature Fault	Critical Alarm	• Problem with thermocouple • High temperature fumes from the plant (change in process) • Poppet cycle time is not correct • Problem with unbalanced chamber temperature	• Check the thermocouple on the stack & wiring • Verify the plant process • Verify RTO set points

VFD Time Out Fault	Critical Alarm	• VFD delay time is passed and VFD permission is not met.	• Check the requirements for VFD permission
Thermocouple Alarm (High Temp)	Critical Alarm	• Problem with thermocouple • High temperature fumes from the plant (change in process)	• Check the thermocouple on the RTO inlet & wiring • Verify the plant process • Verify RTO set points
Low Temperature Warning Alarm	Warning Alarm	• Burner is off and RTO is online • Problem with low fire • Problem with burner actuator	• Verify that burner is on and PLC is controlling it • Check burner actuator
Burner Actuator Fault	Critical Alarm	• Valve is not at the right position • Problem with low/high fire contact switches • Problem with 4-20mA signal	• Check the actuator • Check the low/high fire contact switches • Check the wiring
High Gas Pressure – Burner - Fault	Critical Alarm	• High gas pressure switch is not made • Supplied gas pressure is not adequate	• Check the gas pressure & flow being supplied by utility company • Check setting on the high gas pressure • Check wiring on the switch • Check switch for condensation/water
High Inlet Temperature Fault	Critical Alarm	• Problem with thermocouple • High temperature fumes from the plant (change in process)	• Check the thermocouple on the stack & wiring • Verify the plant process • Verify RTO inlet temperature set point

6.0 - PREVENTIVE MAINTENANCE

Oxidizer components are of high quality and require little maintenance. However, to understand the whole system, it is necessary to study the P&ID, process flow diagram, the electrical schematic and subcomponent information (drawings are included in this manual). Good preventive maintenance will minimize downtime and assure safe operation.

This section provides a scheduled maintenance indication for items supplied by Ship & Shore Environmental under this contract. The sections are divided into daily, monthly, quarterly, semi-annual, and annual checks, which should be performed and recorded. Vendor equipment may require additional maintenance over and above that recommended here. We recommend periodic inspections by Ship & Shore Environmental, Inc. service personnel at least annually, to assure proper operation. Operation of equipment at high temperatures, as this equipment is, will necessitate periodic repair. Ship & Shore Environmental, Inc. is equipped to offer proper and timely inspection and repair service.

Please call 1-562-997-0233 or send email to Service@Shipandshore.com for proper VOC oxidizer service.

SHIP & SHORE ENVIRONMENTAL, INC.
Clean Air Solutions for Industry

7.0 CHECK LIST:

The following lists are general guides for maintaining proper operation of the oxidizer equipment. This list is not intended to be all-inclusive. Check vendor information for additional maintenance information.

7.1 OXIDIZER DAILY CHECKLIST:

1. The Oxidizer:

_____ 1. Check the operating temperature of the oxidizer. Record the temperature at the beginning of each shift or verify recorder is functional.
_____ 2. Walk around the oxidizer. Look for hot spots and other visual signs of problems.
_____3. Check compressed air receiver for water, panel fan(s) and process filters for buildup (at least weekly).
_____4. Check the oil level on the inline mist lubricator that leads to the poppet cylinder. Refill as required. (F442 Parker Oil)

2. The Control Cabinet:

_____ 1. Check panel for burned out lights.
_____ 2. Check that the operating temperature is in working range. (The set point is 1520°F; therefore, the process temperature should be >1500°F ± 40°F).
_____ 3. Check if the flame signal is strong. The flame signal on a DC voltage meter should read between 7 and 10.2 VDC.

7.2 OXIDIZER MONTHLY CHECKLIST (items to check in addition to those listed above):

_____ 1. Check the burner control valve(s) for proper operation and linkage tightness.
_____ 2. Check for gas leaks on gas train.
_____ 3. Check that the main blower and other associated blowers are working properly.
_____ 4. Check that all automatic dampers and their linkages are working properly and well secured.
_____ 5. Open top media hatch to inspect media & top thermocouples. Process and RTO must be off for safety purposes when inspecting the media. RTO needs to be on to check pressure differential across media.

7.3 OXIDIZER QUARTERLY CHECKLIST (items to check in addition to those listed above):

_____ 1. Lubricate all the blower bearings.
_____ 2. Check all the motorized dampers and linkages to assure that they are working smoothly.
_____ 3. Check all the gas valves and the gas regulators for leaks & proper operation.
_____ 4. Check all the electrical connections and contacts at the disconnect switches; at the motor starters, and at the circuit breakers to make sure that they are still in good working condition.
_____ 5. The junction box should also be inspected for moister and proper seal around the door.
_____ 6. GFEP circuit breaker should be inspected.

7.4 Semi-Annual: (items to check in addition to those listed above):

_____ 1. Inspect interior of oxidizer: Remove access doors, check for damage, debris, or other problems. Listen for air/seal leaks at the cylinder(s).
_____ 2. Check seal on the shifting valves.
_____ 3. Check the UV flame sensor for a dirty or clouded lens and housing damage.
_____ 4. Check the spark igniter gap and look for insulator cracks.
_____ 5. Check gas valves for proper operation.
_____ 6. Lubricate valves, fan bearings.

7.5 Annual: (items to check in addition to those listed above):

_____ 1. Check all bearings on any dampers and lubricate/grease if necessary.
_____ 2. Schedule service inspection by Ship & Shore Environmental, Inc.
_____ 3. Check safety switches for proper operation.
_____ 4. Check blowers and lubricate/replace bearings if necessary.
_____ 5. Check and/or calibrate all thermocouples.
_____ 6. Check airflows for each section of the VOC capture system to see if they are in the prescribed operating range.
_____ 7. Inspect/replace UV scanner.
_____ 8. Inspect/replace thermocouples.
_____ 9. The filter elements in the desiccant air dryer should be inspected/replaced annually.

7.6 ADDITIONAL COMPONENTS TO BE INSPECTED AND REPLACED:

_____ 1. UPS Battery system has an estimated life span of 10 years and it is highly recommended and it is checked annually.

8.0 - Spare Parts

8.1 Introduction

Parts for this Ship and Shore Environmental Inc. 4K RTO are available from our service department. All replacement parts are designed to meet or exceed the original equipment part. Substitution of parts other than supplied with the unit during warranty period will void the warranty.

8.2 Ordering parts

The following information is necessary to provide the best service in the least amount of time when ordering parts from Ship and Shore Environmental, Inc.

A. SSE job number and identification of unit

Model No: SSE-5K-95X-RTO
Serial No: 2021-786-XXXX

B. Part number and/or brief description of part.
C. Purchase order number or other form of payment.
D. Shipping and billing address including person responsible for receipt.
E. Method of shipment preferred.

8.3 Recommended Spare Parts

Critical parts should be stocked for the oxidizer. See the list below. Part prices can be provided on request. Prices are subject to change without prior notice. Please allow 4 to 6 weeks lead time for delivery after PO is issued.

Gas Train / Burner Section

Item	Description	Quantity
P-9A	Low Gas Pressure Switch	1
P-15A	High Gas Pressure Switch	1
P-17	Self-Check UV Scanner	1
P-18	Burner Spark Igniter	1
P-19	Burner Ignition Transformer	1

Blowers / Process Section

Item	Description	Quantity
P-102	Electric Actuator On/Off	1
P-102A	Electric Actuator Modulating	1
P-105A	Combustion Blower Air Switch	1
P-107A	Main Blower Air Switch	1
P-118	Combustion Blower Intake Filter	1
P-200	12” Type K Inconel Thermocouple	4
P-200A	12” Type K 316 SS Thermocouple	2
P-200B	9” Type K 316 SS Thermocouple	2
P-221	Poppet Proximity Switch	2
-	Poppet Silicone Seals	4
-	Black Silicone for Seals	8

Pneumatic Power Unit Section

Item	Description	Quantity
P-307	Compressed Air Coalescing Filter	1
P-308	Compress Air Filter/Regulator	1
P-310	Inline Compressed Air Filter ¾” NPT	1
P-310A	Inline Compressed Air Filter ½” NPT	1
P-320	Air Solenoid Valve for Poppet	1
P-332	Air Muffler/Silencer for Poppet	2
P-350	Air Cylinder for Poppet	1
P-350B	Air Flow Control for Poppet	4
P-359	Disposable Desiccant Air Dryer for UV Scanner	1

SHIP & SHORE ENVIRONMENTAL, INC.
Clean Air Solutions for Industry

Electrical Section

Item	Description	Quantity
E-30	PLC	1
E-36	HMI	1
E-50	Burner Management System (BMS)	1
E-150	Transformer	1
E-152	24 VDC Power Supply	2
E-220	SPDT Relay	23
E-221	SPDT Relay	9
E-222	DPDT Relay	17
E-225	Timer (on-delay)	1
E-227	Timer (off-delay)	1
E-230	Master Control Relay	2
E-322	Fuses	4

9.0 - WARRANTY, TERMS & CONDITIONS OF SALE

1. AGREEMENT AND ACCEPTANCE. The terms and conditions of Sale set forth herein, in the order, and entire order acknowledgement shall constitute the entire Agreement between SHIP & SHORE ENVIRONMENTAL, INC. (known as Seller) and Buyer and supersedes all other agreements and understandings, whether written or oral between the parties with respect to the subject matter hereof. Seller's acceptance of any offer by Buyer is expressly mode conditional upon Buyer's assent to the terms and conditions hereof, and none of Buyer's Additional or different terms shall apply. Acceptance of Seller's offer to sell is expressly limited to acceptance of the terms and conditions hereof and no other terms or conditions shall apply, unless expressly agreed to by Seller in writing.

2. PRICE. All prices exclude federal, state, or local taxes, customs, duties, charges, consular fees, permit and license fees and any other taxes, fees or expenses which shall be added to the price or billed separately to Buyer where Seller has the legal obligation to collect or pay such taxes, fees, or expenses. All such taxes shall be paid by Buyer. Prices quoted are firm for thirty (30) days unless extended in writing by Seller. Prices are firm provided release to manufacturing and shipment is completed by Seller within one hundred and twenty (120) days of acceptance of purchase order by Seller. However, prices may increase as a result of delays due to changes requested by Buyer or Buyer's failure to furnish information requested. Seller reserves the right to change this policy at any time without written notice. Seller reserves the right to charge at any time a monthly service charge of one and one-half percent (1.5%) or the highest rate allowed by Law, whichever is Iower, on accounts outstanding more than thirty (30) days from the date of Seller's invoice, effective as of the thirty-first (31st) day from the date of the invoice.

3. PAYMENT TERMS. If Seller has extended credit to Buyer (as evidenced by notation to that effect on the face of this Agreement), payment shall be due upon presentation of Seller’s invoice, not to exceed net thirty (30) days after date of Seller's Invoice. The amount of credit may be changed and/or credit withdrawn by Seller, at any time. On any order on which credit is not extended by Seller, shipment or delivery shall only be made, at Seller's election after payment in cash with order (in whole or in part), C.O.D., or by a signed draft upon presentation of bill of lading or other appropriate shipping documents covering each shipment. All costs of collection shall be borne by Buyer. If shipment or delivery is delayed by Buyer, payment shall be due when Seller is ready to make the shipment or delivery. Unless otherwise set forth on the face of this Agreement all payments shall be made In U.S. Dollars. If Buyer fails to fulfill the terms of payment or if Seller shall have any doubt at any time as to Buyer's financial condition, Seller may decline to make further deliveries except upon prompt receipt of cash or satisfactory security, as decided by Seller. This requirement will not release Buyer from any previous obligation. Seller's right under this Section shall be in addition to all other rights and remedies provided by law or in equity upon Buyer's default. In addition, if reasonably requested by Seller, Buyer shall furnish a irrevocable letter of credit in favor of Seller, in an amount sufficient to cover the price of products and all related expenses which are for Buyer's account, and which includes such other terms and conditions as may be agreed upon and issued or confirmed by a U.S. bank, as may be acceptable to Seller.

4. ORDERS. No order shall be valid until accepted by Seller at its office in Signal Hill, California. U.S.A.

5. FORCE MAJEURE. Seller shall not be liable for any delays in the delivery of orders or any other failure to perform, due in whole or in part, directly or indirectly, to fire, storm, flood, earthquake, war, insurrection, labor disputes or shortages, act of God, strike, shortage of raw materials, supplies or components, retooling, upgrading of technology, delays of carriers, embargo, government order or directive, or any other circumstance beyond Seller's reasonable control. Buyer agrees that Seller shall not be liable for any direct, indirect, consequential, or special damages which may result from any such delays.

6. DELIVERY TERMS; RISK OF LOSS. Unless otherwise stated on the face of this Agreement, all deliveries shall be F.O.B. Seller's factory. Seller will attempt to meet the requirements of Buyer's delivery schedule but shall be obligated only to the delivery schedule shown on the order acknowledgment and Seller shall not be in default of performance due to a delay of reasonable duration resulting from any cause. All delivery expenses, including transportation, freight, cranes, lifting devices and labor required for loading and unloading, insurance, and any other shipping costs, and risk of fees during delivery and transportation, shall be for the account of Buyer. Claims for damages in transit must be assessed against the carrier. Unless otherwise instructed, selection of carrier and routing of all shipments shall be at Seller's discretion. All boxing, crating and packaging charges for sales shall be added to the price. When special packaging is specified for domestic or export sales involving greater expense than that customarily supplied, a charge may be made to cover such extra expense. Shipment dates for export sales are approximate and are subject to receipt of all necessary Buyer Information, letter of credit, if required, and all necessary licenses, permits and other documents.

7. INSPECTION AND ACCEPTANCE. Buyer must inspect delivered products and report claims for damages or shortages in writing within ten (10) days of delivery or the products shall be deemed irrevocably accepted and such claims are hereby waived.

8. LIMITED WARRANTY AND REMEDIES. Seller warrants to the original purchaser that the products sold hereunder shall be free from defects in workmanship and material upon delivery under normal use and service (except in those cases where the materials are supplied by Buyer) for a period of one year from the date of original installation or fifteen (15) months from the date of shipment, whichever occurs first. The liability of Seller under this warranty is limited to replacing, repairing, or issuing credit (at cost, FOB factory and at Seller's discretion) for any part or parts which are returned by Buyer during such period provided that (a) Seller is notified in writing within ten (10) days following discovery of such defects by Buyer, or within ten (10) days after such defects should reasonably have been discovered, whichever is less, (b) the defective unit returned to Seller, transportation charges prepaid by Buyer, (c) payment in full has been received by Seller for said products, (d) Seller's examination of such unit shall disclose to Seller's satisfaction that such defects have not been caused by misuse, neglect, improper installation, repair, unauthorized modification, Buyer’s design, alteration, act of God, or accident. No warranty made hereunder shall extend to any Seller's product whose serial number is altered, effaced or removed. Seller makes no warranty, expressed or implied with respect to the specific application for which Seller's products are used or with respect to the design or operation of an entire system, in which Seller's products sold hereunder are mere components, nor does Seller make any warranty, expressed or implied, with respect to motors, switches, controls, or other components of Seller's

product, where such components are warranted separately by their respective manufacturers. Repair or replacement of the products sold hereunder, or refund of the purchase price as provided in this warranty, is the Buyer's exclusive remedy. This exclusive remedy will not be deemed to have failed its essential purpose so long as Seller is willing and able to repair or replace any defective product, refund the purchase price, in the prescribed manner. THIS WARRANTY IS EXPRESSLY IN LIEU OF ALL OTHER WARRANTIES, EXPRESSED OR IMPLIED, WHETHER STATUTORY OR OTHERWISE, INCLUDING ANY WARRANTY OF MERCHANTABILITY, INFRINGEMENT, OR FITNESS FOR A PARTICULAR PURPOSE. BUYER'S FAILURE TO PAY THE FULL AMOUNT DUE WITHIN SIXTY (6O) DAYS OF DATE OF INVOICE SHALL OPERATE TO RELEASE SELLER FROM ANY AND ALL LIABILITY OR OBLIGATION ARISING PURSUANT TO ANY WARRANTY EXPRESSED OR IMPLIED, WHETHER STATUTORY OR OTHERWISE, INCLUDING ANY WARRANTY OF MERCHANTABILITY, INFRINGEMENT, OR FITNESS FOR A PARTICULAR PURPOSE, MADE IN CONNECTION WITH ANY CONTRACT FORMED HEREUNDER. BUYER AGREES THAT SUCH FAILURE TO PAY SHALL CONSTITUTE A VOLUNTARY WAIVER OF ANY AND ALL SUCH WARRANTIES ARISING PURSUANT TO SUCH CONTRACT, Seller makes no other warranties of any kind and any repair or attempt to repair products by anyone other than an authorized representative of Seller automatically voids any warranty of those products. Any oral or written statement concerning the products inconsistent with the warranty contained herein shall be of no force or effect.

9. LIMITATIONS ON LIABILITY. Under no circumstances shall Seller be liable for any indirect, consequential, collateral, special or incidental damages (including without limitation, increased manufacturing costs, loss of profits, or goodwill) whether such claim is based on contract, negligence, strict tort, warranty or any other basis. Seller's liability shall, in no event, exceed the purchase price of the particular products with respect to which a claim is made. Tools, dies, and other equipment furnished to Seller by Buyer shall be at Buyer's risk and expense. Seller does not insure Buyer under any of its insurance policies, including liability or workers' compensation. Seller will not provide Buyer with indemnification for any matter nor does Seller agree to provide Buyer with contribution for any damages. Seller has no obligation to Buyer to direct Seller's insurance companies to waive their right of subrogation against Buyer in the event of an insured loss.

10. LIMITATION OF ACTIONS. Any actions or claims by Buyer under this Agreement shall be brought within 15 months after shipment of the products sold by Seller hereunder, or shall be deemed barred by waiver.

11. PATENTS. When Seller has manufactured any products or parts thereof in accordance with specifications or drawings furnished by Buyer or when a product or a part thereof is made to Buyer's design, Buyer at its own expense will defend any suit against Seller for infringement of patents and will satisfy any final award of damages for such infringement; provided Seller gives Buyer notice in writing of any such suit for infringement, opportunity to conduct the defense thereof and assistance and cooperation in said defense. As to other articles furnished by Seller, Seller, at its own expense will defend any suit against Buyer for infringement of United States patents by any such product purchased from Seller when used or sold for its normal purpose and in any such

suit will satisfy any final award of damages for such infringement, but Seller assumes no liability consequential or otherwise for infringement or patent claims covering any components, switches, motors or other parts purchased by Seller from third parties or covering any other product, or any completed equipment, or any assembly, combination, method or process, in which, or in the manufacture or testing of which, any such product may be used (notwithstanding that such product may have been designed only for use in, or may be useful in, such other patented product or such patented equipment, assembly, combination, method or process, or in the manufacturing or testing thereof, and that such product may have been purchased by Buyer and sold by Seller for such use.) This covenant by Seller is upon the condition that Buyer shall give Seller a prompt notice in writing of such suit or infringement, full opportunity to conduct the defense thereof and full assistance and cooperation in said defense. No cost or expense shall be incurred for the account of Seller without its written consent. When Buyer orders articles Buyer is licensed to have made for Buyer, Seller is hereby authorized to manufacture said articles under Buyer's license and Buyer will be responsible for such royalties as may be due and for such notification to its licensor as Buyer is obligated to make.

12. CHANGES. After acceptance by Seller, Buyer's order shall not be subject to cancellation, change or reduction in amount nor to any suspension by Buyer of deliveries without Seller's prior written consent. Buyer acknowledges that Seller engages in continuous product improvement and makes changes to its products from time to time. The Seller reserves the right to make reasonable changes and use substitute parts or products as long as such substitutions perform equal to, or better than the original product or part thereof, and shall have the right to deliver revised designs or models and such substitute products or parts against any order.

13. NONWAIVER OF DEFAULT. Each shipment made under any order shall be treated as a separate transaction, but in the event of any default by Buyer, Seller may decline to make further shipments without in any way affecting its rights under such order, if, despite any default by Buyer, Seller elects, to continue to make shipments, its actions shall constitute a waiver of any default by Buyer or in any way affect Seller's legal remedy for such default and Seller's failure to deliver, or nonconformity of, any installment of this Agreement after a Buyer default shall not be a breach of the entire Agreement.

14. TERMINATION. If the products to be furnished under this order are to be used in the performance of a Government contract or subcontract and the Government terminates such contract, in whole or in part, this order may be the same proportion, and the liability of Buyer for termination allowances shall be determined by the then applicable regulations of the Government (regarding termination of contracts). No termination by Buyer for default shall be effective unless Seller shall have failed to correct such alleged default within fifteen (15) days after receipt by Seller of a written notice specifying such default.

15. ASSIGNS. This agreement shall be binding upon and inure to the benefit of the successors end assigns of the entire business and good will of either Seller or Buyer or of that part of the business of either used in the performance of this Agreement, but shall not be otherwise assignable.

16. MODIFICATION OF STANDARD TERMS AND CONDITIONS. No addition to or modification of any of the provisions upon the face or reverse of this form shall be

binding upon Seller, unless made in writing and signed by a duly authorized employee of Seller.

17. ARBITRATION. Buyer agrees that all claims, demands, disputes, controversies, and differences arising under any contract made hereunder shall be settled exclusively in arbitration in accordance with the rules then prevailing American Arbitration Association. Judgment on the award thus rendered shall be binding on the Buyer and may be entered in any court having jurisdiction thereof. Unless the parties agree otherwise in writing, such arbitration will be conducted in Signal Hill, California, U.S.A.

18. EXPORT REGULATIONS; PERMITS. Buyer will comply with the provisions of the United States Government's Export Administration regulations end related documentation requirements and internal control procedures. Buyer shall be responsible for obtaining any necessary export or import licenses and permits.

19. APPLICABLE LAW. This agreement shall be governed by and construed in accordance with the internal laws (and not the laws of conflicts) of the State of California, U.S.A. and the Buyer submits to the personal jurisdiction of courts located in California, U.S.A. The United Nations Convention on Contracts for the International Sale of Products shall not apply to this Agreement.

20. VALIDITY. If any provision of this Agreement is found to be invalid or unenforceable in any respect, the validity and enforceability of the remaining provisions shall not be affected.

21. MISCELLANEOUS. All clerical errors are subject to correction. Seller may subcontract the furnishing of any products sold hereunder and any portion thereof.

APPENDIX A

RTO Mechanical Drawings

NOTES:

1. EQUIPMENT LOCATION PER BIOENERGY DEVCO.
2. CONTROL PANEL FINALIZED.
3. REFERENCE DIMENSION TO BE ADDED

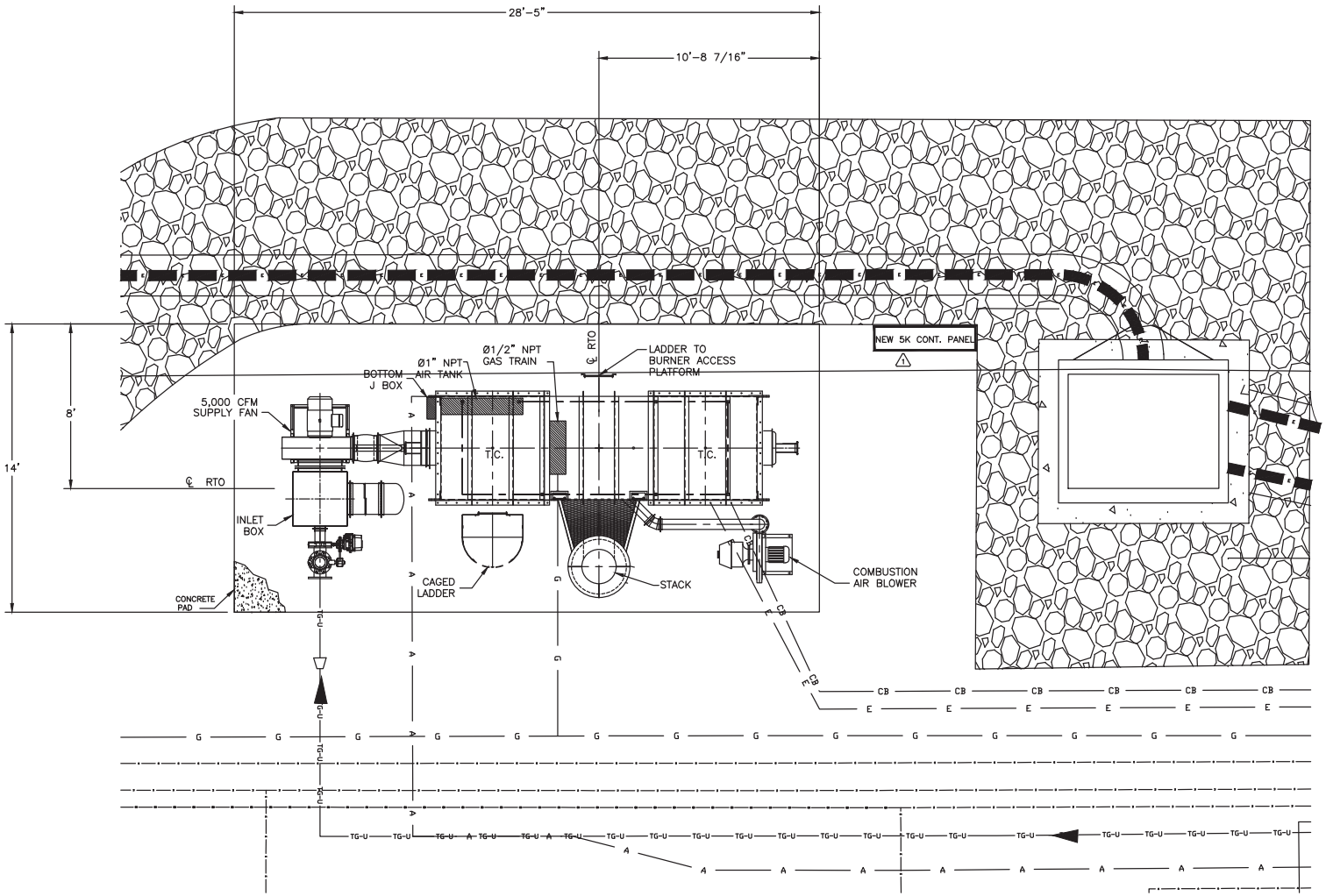

BIOENERGY DEVCO FACILITY

PLAN VIEW

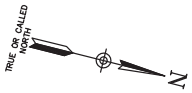

APPROVAL DRAWING
6-8-21

- [ ] APPROVED
- [ ] APPROVED AS MARKED
- [ ] REJECTED

BY _____

IF DRAWINGS ARE NOT RETURNED WITHIN ONE WEEK, THEY ARE CONSIDERED APPROVED

REV	DESCRIPTION	DATE	BY	CK'D
1	INCLUDED LOCATION OF CONTROL PANEL	6/7/21	EM	CK'D

THIS DRAWING CONTAINS PROPRIETARY AND PRIVILEGED INFORMATION OF SHIP & SHORE ENVIRONMENTAL, INC. AND SHALL NOT BE DISCLOSED OR USED FOR THE BENEFIT OF OTHERS WITHOUT PRIOR WRITTEN PERMISSION OF SHIP & SHORE ENVIRONMENTAL, INC.

SHIP & SHORE ENVIRONMENTAL, INC.
Clean Air Solutions for Industry
2474 N. PALM DRIVE – SIGNAL HILL, CA 90755
Tel: (562) 997-0233 – Fax: (562) 997-0604

BIOENERGY DEVCO

DRAWING FILE NAME: 2021-786-M01r1	SCALE: 3/8"=1'-0"	DRAWN BY: EM	APPROVED BY:
TITLE: EQUIPMENT LAYOUT			
DATE: 5-26-21	DRAWING NUMBER: 2021-786-M01	SHT. of	REV. 1

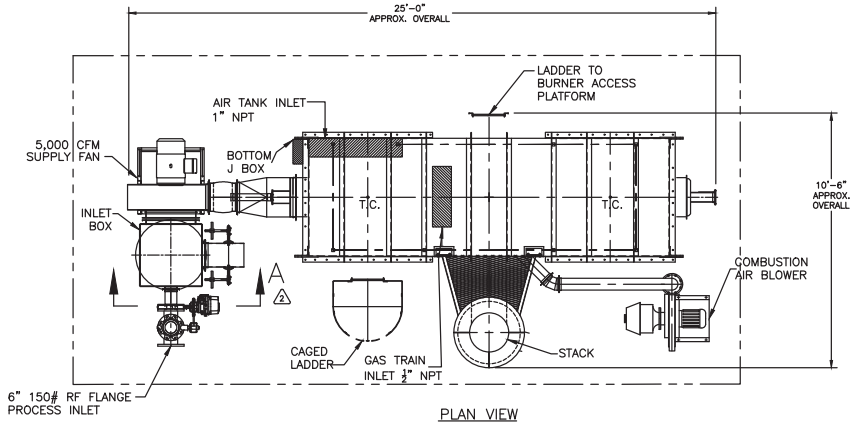

PLAN VIEW

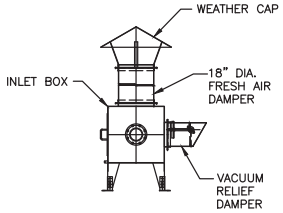

VIEW "A" 2

NOTE:
APPROXIMATE WEIGHT OF COMPLETED REGENERATIVE THERMAL OXIDIZER AND MISC. COMPONENTS:

UPPER SECTION (RET. CHAMBER)	= 6,317 LBS.
LOWER SECTION (MEDIA CHAMBER)	= 5,226 LBS.
MEDIA	=10,560 LBS.
GRILL	= 475 LBS.
MANIFOLDS & VALVES	= 1,690 LBS.
EXHAUST STACK	= 1,650 LBS.
BLOWER	= 1,300 LBS.
MISCELLANEOUS	= 1,800 LBS.
TOTAL WEIGHT	= 29,018 LBS.

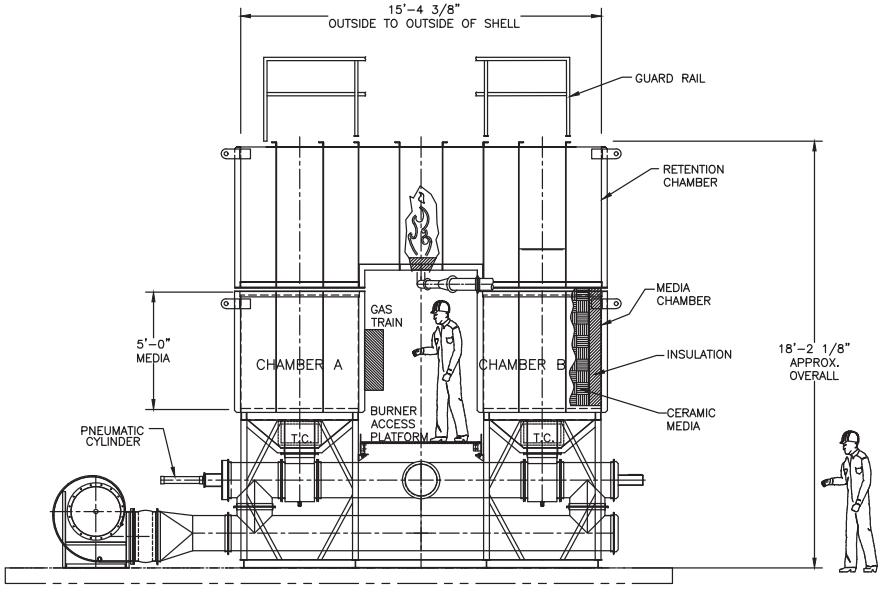

ELEVATION VIEW
STACK & COMBUSTION AIR BLOWER NOT SHOWN IN THIS VIEW FOR CLARITY

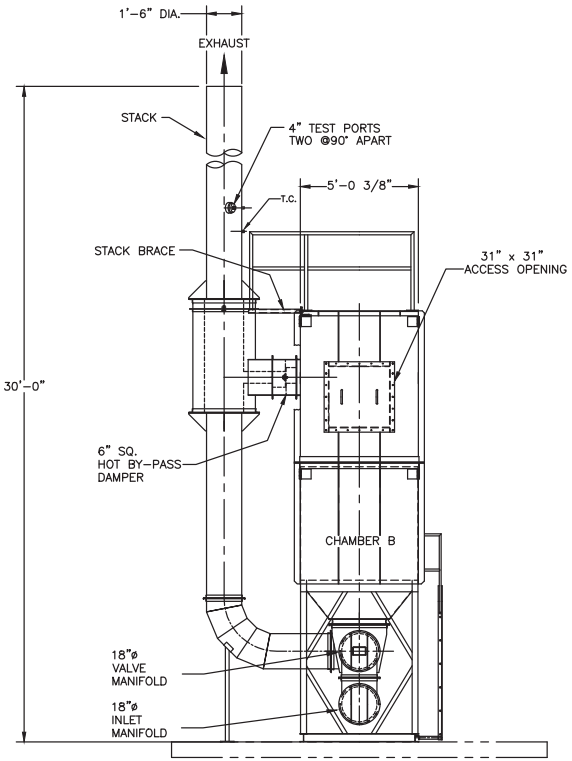

RIGHT ELEVATION
COMBUSTION BLOWER, CAGED LADDER & FAR END EQUIPMENT NOT SHOWN FOR CLARITY

RELEASED
BY: GERRIT FISSER
DATE: 10-5-21

NOTES:

1. ALL WEIGHTS & DIMENSIONS ARE APPROXIMATE AND SUBJECT TO CHANGE DURING DESIGN PHASE.

ENG. REF.:
4' x 4' BED

REV	DESCRIPTION	DATE	BY	CK'D
2	ADDED VIEW "A" TO SHOW LOCATION OF FRESH AIR AND VACUUM RELIEF DAMPERS	10/5/21	GPF	CK'D
1	INCLUDED INLET SIZES	6/7/21	EM	CK'D

THIS DRAWING CONTAINS PROPRIETARY AND PRIVILEGED INFORMATION OF SHIP & SHORE ENVIRONMENTAL, INC. AND SHALL NOT BE DISCLOSED OR USED FOR THE BENEFIT OF OTHERS WITHOUT PRIOR WRITTEN PERMISSION OF SHIP & SHORE ENVIRONMENTAL, INC.

SHIP & SHORE ENVIRONMENTAL, INC.
Clean Air Solutions for Industry
2474 N. PALM DRIVE – SIGNAL HILL, CA 90755
Tel: (562) 997-0233 – Fax: (562) 997-0604

BIOENERGY DEVCO

DRAWING FILE NAME: 2021-786-M02r2	SCALE: 3/8"=1'-0"	DRAWN BY: GPF	APPROVED BY:
TITLE: 5,000 SCFM REGENERATIVE THERMAL OXIDIZER GENERAL ARRANGEMENT			
DATE: 5-17-21	DRAWING NUMBER: 2021-786-M02	SHT. 1 of 1	REV. 2

2018-492-M001 2020-774-M02

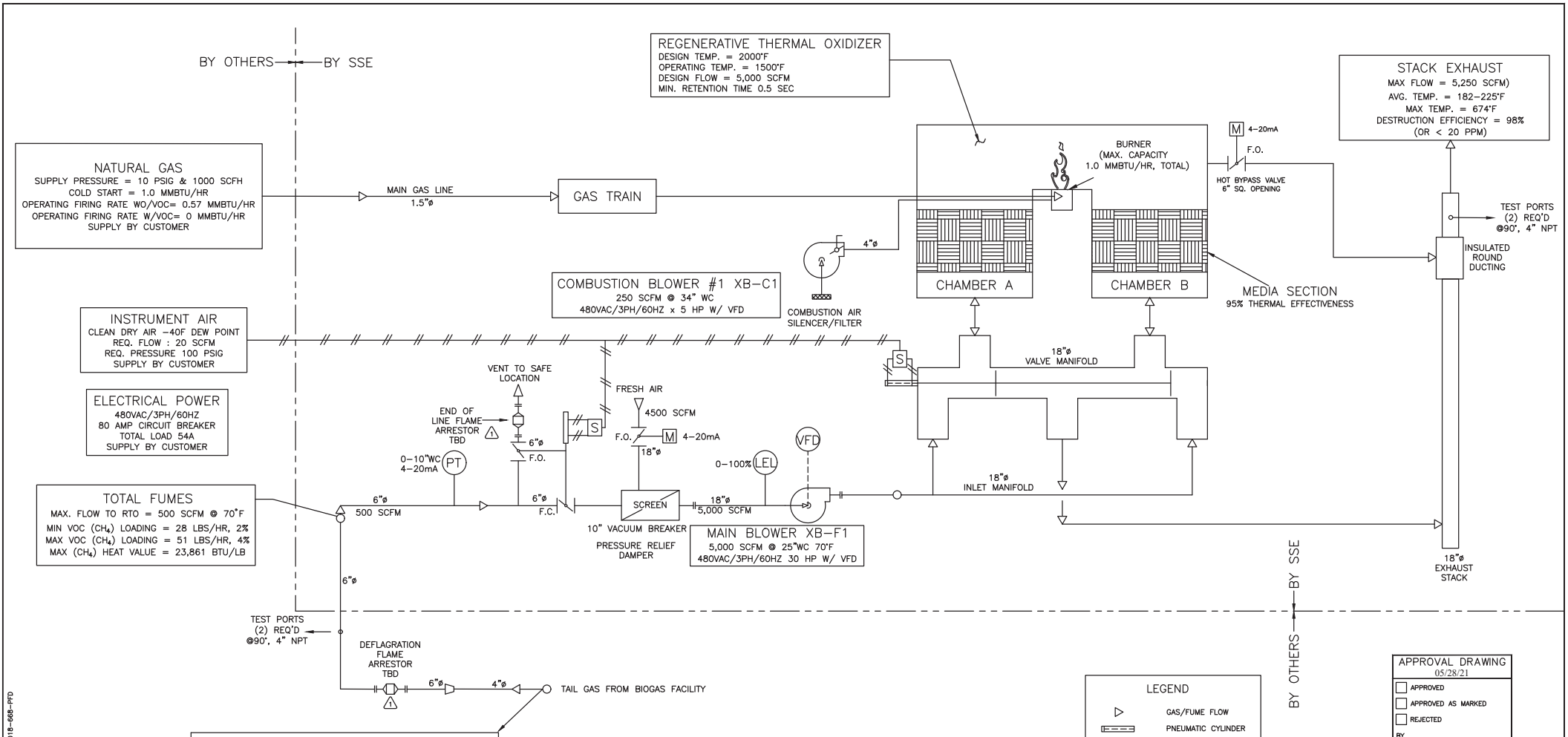

TAIL GAS COMPOSITION	
FLOW, SCFM	274–500
INLET PRESSURE, PSIG	0
TEMPERATURE, °F	50–70
CH_4, % BY VOLUME	2–4
CO_2, % BY VOLUME	96%
N_2, % BY VOLUME	0.1%
H_2S, ppmV	<4 ppmV
O_2, % BY VOLUME	0.2%0
NH3, PPM	<10 ppmV
VOCs	<4 ppmV

LEGEND

- GAS/FUME FLOW
- PNEUMATIC CYLINDER
- FLAME ARRESTOR
- MOTORIZED DAMPER
- SOLENOID
- CENTRIFUGAL BLOWER
- BURNER
- INSTRUMENT AIR

APPROVAL DRAWING
05/28/21

- ☐ APPROVED
- ☐ APPROVED AS MARKED
- ☐ REJECTED

BY _____

IF DRAWINGS ARE NOT RETURNED WITHIN ONE WEEK, THEY ARE CONSIDERED APPROVED

NOTES:

1. Compressed air requirement is not continuous. 20 cfm @ 100 psig will be required for approx. 20 minutes every 8 hours in order to fill the air tank.

REV	DESCRIPTION	DATE	BY	CK'D
1	ADDED FLAME ARRESTORS TO SSE SCOPE	6/7/21	EM	CK'D

THIS DRAWING CONTAINS PROPRIETARY AND PRIVILEGED INFORMATION OF SHIP & SHORE ENVIRONMENTAL, INC. AND SHALL NOT BE DISCLOSED OR USED FOR THE BENEFIT OF OTHERS WITHOUT PRIOR WRITTEN PERMISSION OF SHIP & SHORE ENVIRONMENTAL, INC.

SHIP & SHORE ENVIRONMENTAL, INC.
Clean Air Solutions for Industry
2474 N. PALM DRIVE – SIGNAL HILL, CA 90755
Tel: (562) 997-0233 – Fax: (562) 997-0604

BIOENERGY DEVCO

DRAWING FILE NAME	SCALE	DRAWN BY	E.M.
2021–786–PFDr1	NONE	APPROVED BY	

TITLE: PROCESS FLOW DIAGRAM

DATE	DRAWING NUMBER	SHT.	REV.
6–7–21	2021–786–PFD	1 of 1	1

2004–117–PFDR6 2009–292–PFD 2013–403–PFD 2016–574–PFD 2018–668–PFD

LEGEND

AE	ANALYSIS SENSOR
AAL	ANALYSIS ALARM LOW
AAH	ANALYSIS ALARM HIGH
AAHH	ANALYSIS ALARM HIGH HIGH
BE	BURNER
BSHL	BURNER SAFEGUARD
BV	BUTTERFLY VALVE
CV	CHECK VALVE
DE	DE-ENERGIZED
EJ	EXPANSION JOINT
EN	ENCLOSURE
EXH	EXHAUST
FC	FLOW CONTROL
FCV	FLOW CONTROL VALVE
FE	FLOW ELEMENT
FIT	FLOW INDICATING TRANSMITTER
FT	FLOW TRANSMITTER
FH	FLEXIBLE HOSING
FS	FLOW SWITCH
HE	HEATING ELEMENT
HF	HYDRAULIC FITTING
HH	HYDRAULIC HOSE
HSP	HYDRAULIC SUB PLATE
HT	HYDRAULIC TUBING
HTE	HYDRAULIC TUBING ELBOW
HTF	HYDRAULIC TRANSMISSION FLUID
HV	HAND VALVE
IH	IMMERSION HEATER
I/P	CURRENT TO PRESSURE TRANSDUCER
LC	LEVEL CONTROL
LAH	LEVEL ALARM HIGH
LR	INLINE MIST LUBRICATOR
LEL	LOW EXPLOSION LIMIT
LS	LEVEL SWITCH
LT	LEVEL TRANSMITTER
M	MOTOR/ACTUATOR
MG	MAGNIFYING GLASS
MV	MOTORIZED VALVE
PC	PRESSURE CONTROL
PCV	PRESSURE REQULATOR
PD	PULSATION DAMPENER
PDI	PRESSURE DIFFERENTIAL INDICATOR
PDS	PRESSURE DIFFERENTIAL SWITCH
PDT	PRESSURE DIFFERENTIAL TRANSMITTER
PI	PRESSURE INDICATOR
PIC	PRESSURE INDICATING CONTROLLER
PIT	PRESSURE INDICATING TRANSMITTER
PSH	PRESSURE SWITCH HIGH
PSL	PRESSURE SWITCH LOW
PSV	PRESSURE SAFETY VALVE
PRV	PRESSURE RELIEF VALVE
PT	PRESSURE TRANSMITTER
PX	PRESSURE TAP
QRV	QUICK RELIEF VALVE
S	SOLENOID
SP	SPEED CONTROL
SSOV	SAFETY SHUT OFF VALVE
TAH	TEMPERATURE ALARM HIGH
TAL	TEMPERATURE ALARM LOW
TCV	TEMPERATURE CONTROL VALVE
TE	THERMOCOUPLE OR RTD
TI	TEMPERATURE INDICATOR/INDICATION
TIAH	TEMPERATURE INDICATING ALARM HIGH
TIC	TEMPERATURE INDICATIN CONTROL
TICR	TEMPERATURE INDICATING CONTROLLER/RECORDER
TSH	TEMPERATURE SWITCH HIGH
TSL	TEMPERATURE SWITCH LOW
VB	VACUUM BREAKER
VE	VIBRATION SENSOR
VS	VIBRATION SWITCH
VFD	VARIABLE FREQUENCY DRIVE
XAR	AIR RESERVOIR
XAD	AIR DRYER
XB	BLOWER
XBS	BURNER UV SCANNER
XBT	BLADDER TANK
XC	AIR COMPRESSOR
XDC	DUST COLLECTOR
XEB	EXPANSION BELLOWS
XEG	EMERGENCY GENERATOR
XES	EXHAUST SILENCER
XF	FILTER
XH	HOSE
XHA	HYDRAULIC ACCUMULATOR
XHC	HYDRAULIC CYLINDER
XHP	HYDRAULIC PUMP
XHX	HEAT EXCHANGER
XIT	IGNITION TRANSFORMER
XPA	PNEUMATIC ACTUATOR
XPC	PNEUMATIC CYLINDER
XS	SNORKEL
XSA	SHOCK ABSORBER
XSG	COMPRESSION SPRING
XSP	SPARK PLUG
ZI	POSITION INDICATOR
ZSH	POSITION/PROXIMITY SWITCH/SENSOR HIGH
ZSL	POSITION/PROXIMITY SWITCH/SENSOR LOW

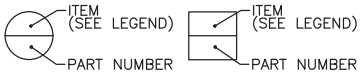

ITEM-A = ON COMP. AIR LINE
ITEM-C = ON COMBUSTION LINE
ITEM-F = ON FUME LINE
ITEM-G = ON GAS LINE
ITEM-H = ON HYDRAULIC LINE
ITEM-R = ON RTO

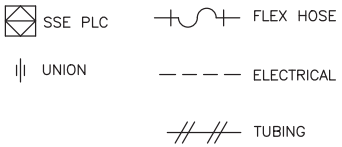

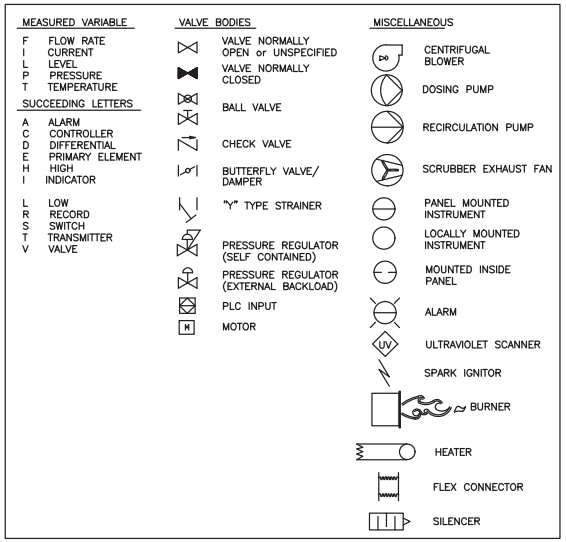

REV	DESCRIPTION	DATE	BY	CK'D
1	SEE SHEET 3	8/11/21	ED	CK'D

THIS DRAWING CONTAINS PROPRIETARY AND PRIVILEGED INFORMATION OF SHIP AND SHORE ENVIRONMENTAL, INC. AND SHALL NOT BE DISCLOSED OR USED FOR THE BENEFIT OF OTHERS WITHOUT PRIOR WRITTEN PERMISSION OF SHIP AND SHORE ENVIRONMENTAL, INC.

SHIP & SHORE ENVIRONMENTAL, INC.
Clean Air Solutions for Industry
2474 N. PALM DRIVE – SIGNAL HILL, CA 90755
Tel: (562) 997-0233 – Fax: (562) 997-0604

BIOENERGY DEVCO

DRAWING FILE NAME	SCALE	DRAWN BY	EM
2021-786-PID r1-sht1	NONE	APPROVED BY	

TITLE PIPING & INSTRUMENTATION DIAGRAM LEGEND & NOTES

DATE	DRAWING NUMBER	SHT.	REV.
6-3-21	2021-786-PID	1 of 3	1

2006-239-PID4-SHT4, 2008-274-PID5-SHT1, 2010-315-PID SHT1 2011-334-PID2-sht1 2011-349-PID 2012-359-PID 2018-668-PID

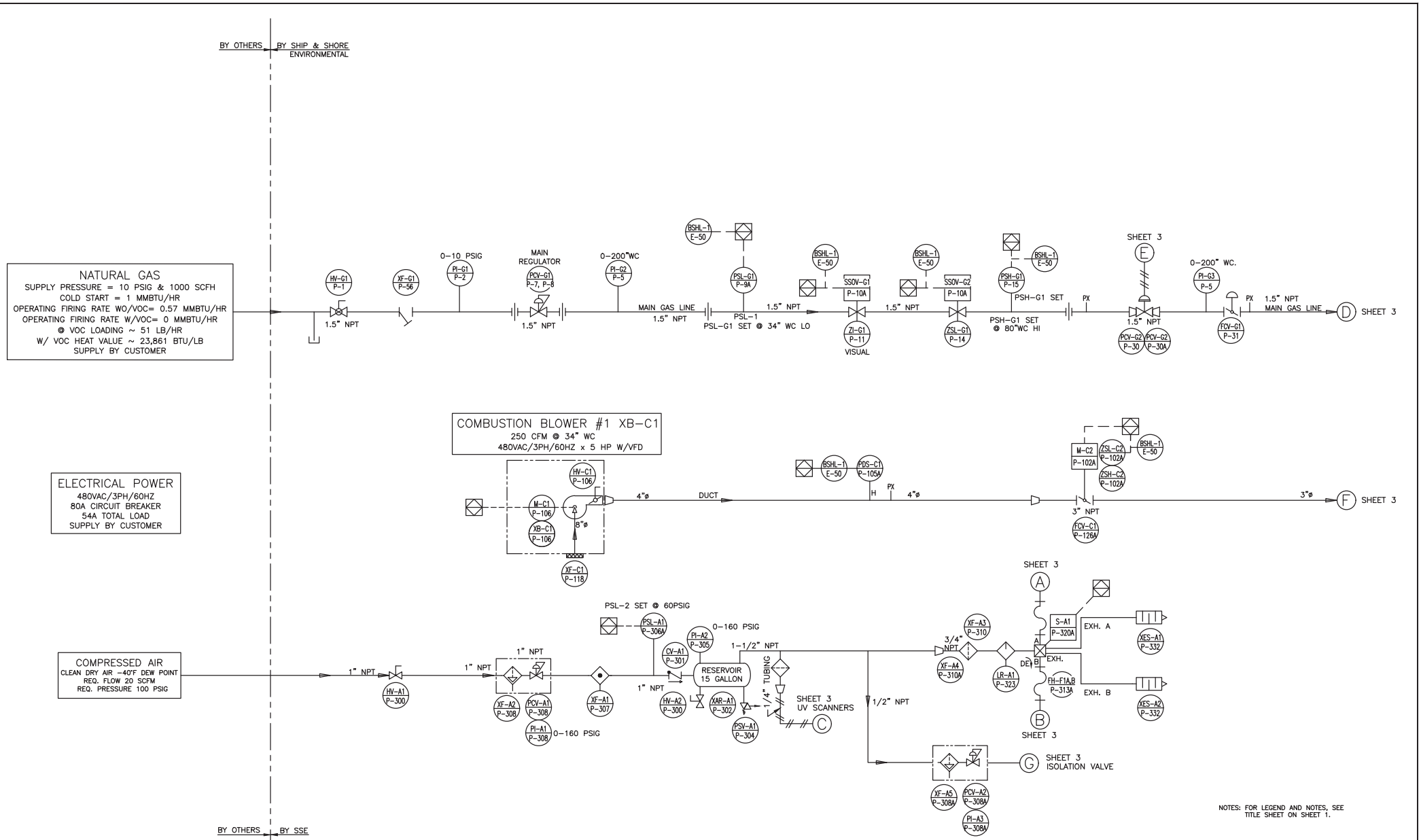

NOTES: FOR LEGEND AND NOTES, SEE TITLE SHEET ON SHEET 1.

REV	DESCRIPTION	DATE	BY	CK'D
1	SEE SHEET 3	8/11/21	ED	CK'D

THIS DRAWING CONTAINS PROPRIETARY AND PRIVILEGED INFORMATION OF SHIP AND SHORE ENVIRONMENTAL, INC. AND SHALL NOT BE DISCLOSED OR USED FOR THE BENEFIT OF OTHERS WITHOUT PRIOR WRITTEN PERMISSION OF SHIP AND SHORE ENVIRONMENTAL, INC.

SHIP & SHORE ENVIRONMENTAL, INC.
Clean Air Solutions for Industry
2474 N. PALM DRIVE – SIGNAL HILL, CA 90755
Tel: (562) 997-0233 – Fax: (562) 997-0604

BIOENERGY DEVCO

DRAWING FILE NAME	SCALE	DRAWN BY
2021-786-PIDr1-sht2	NONE	EM
		APPROVED BY

TITLE: PIPING & INSTRUMENTATION DIAGRAM-UTILITY

DATE	DRAWING NUMBER	SHT.	REV.
7-6-21	2021-786-PID	2 of 3	1

2013-433-PID-SHT2 2014-457-PID-SHT2

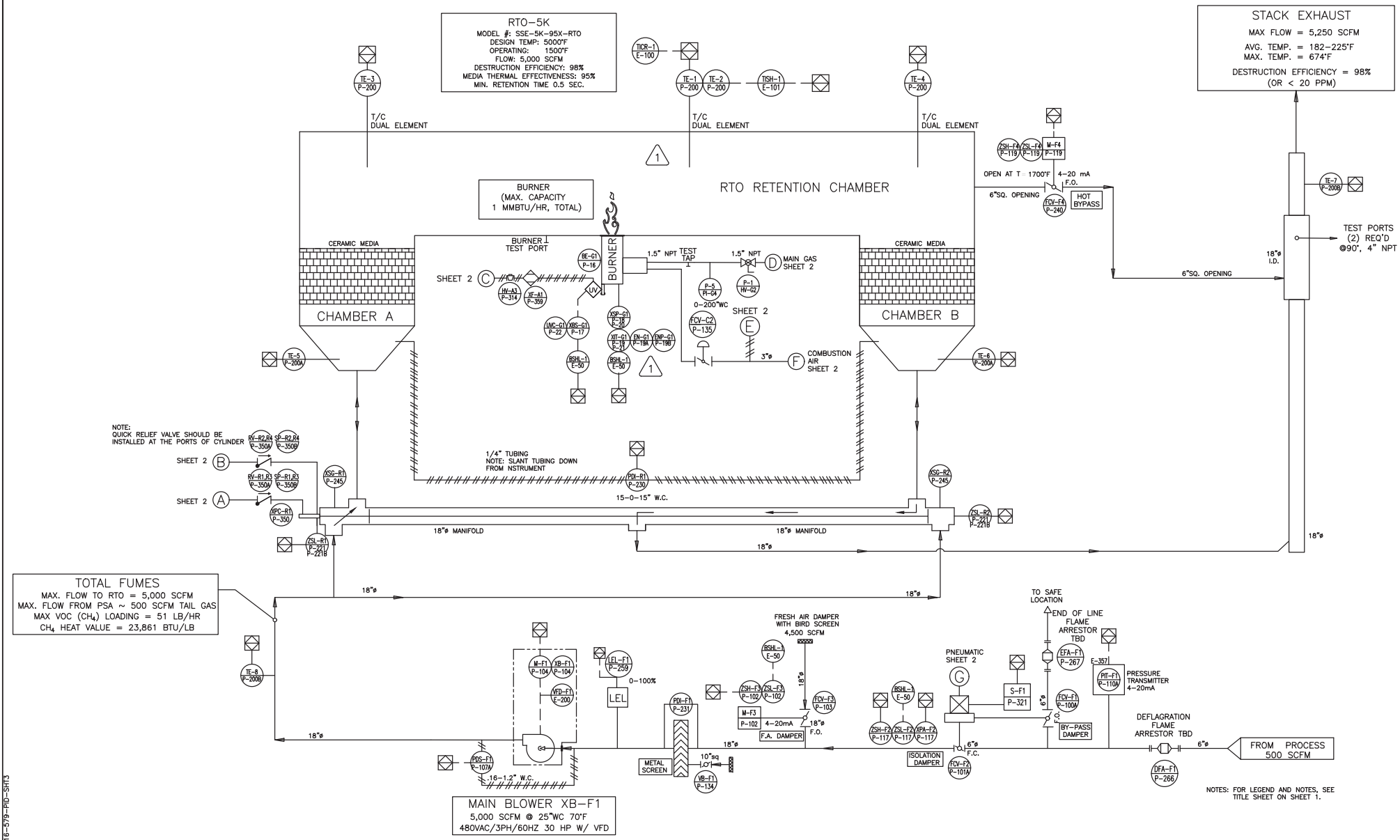

REV	DESCRIPTION	DATE	BY	CK'D
1	INCLUDED ENCLOSURE P-19A FOR P-19	8/18/21	ED	CK'D
1	INCLUDED CENTER THERMOCOUPLE AND ADJUSTED DRAWING	8/11/21	ED	CK'D

THIS DRAWING CONTAINS PROPRIETARY AND PRIVILEGED INFORMATION OF SHIP AND SHORE ENVIRONMENTAL, INC. AND SHALL NOT BE DISCLOSED OR USED FOR THE BENEFIT OF OTHERS WITHOUT PRIOR WRITTEN PERMISSION OF SHIP AND SHORE ENVIRONMENTAL, INC.

SHIP & SHORE ENVIRONMENTAL, INC.
Clean Air Solutions for Industry
2474 N. PALM DRIVE – SIGNAL HILL, CA 90755
Tel: (562) 997-0233 – Fax: (562) 997-0604

BIOENERGY DEVCO

DRAWING FILE NAME: 2021-786-PIDr1-sht3	SCALE: NONE	DRAWN BY: EM	APPROVED BY:
TITLE: PIPING & INSTRUMENTATION DIAGRAM-PROCESS			
DATE: 7-6-21	DRAWING NUMBER: 2021-786-PID	SHT. 3 of 3	REV. 1

2013-407-PID, 2016-579-PID-SHT3

APPENDIX C

Fans Certified Drawings and Curves

Process Fan

CBC FAN ASSEMBLY: 19-1-0016-45-55
CBC WHEEL ASSEMBLY: 400215-51

* DIMENSION IS FOR REFERENCE ONLY
AND VARIES PER MOTOR MANUFACTURER.
SEE MOTOR PRINTS FOR FINAL DIMENSIONING

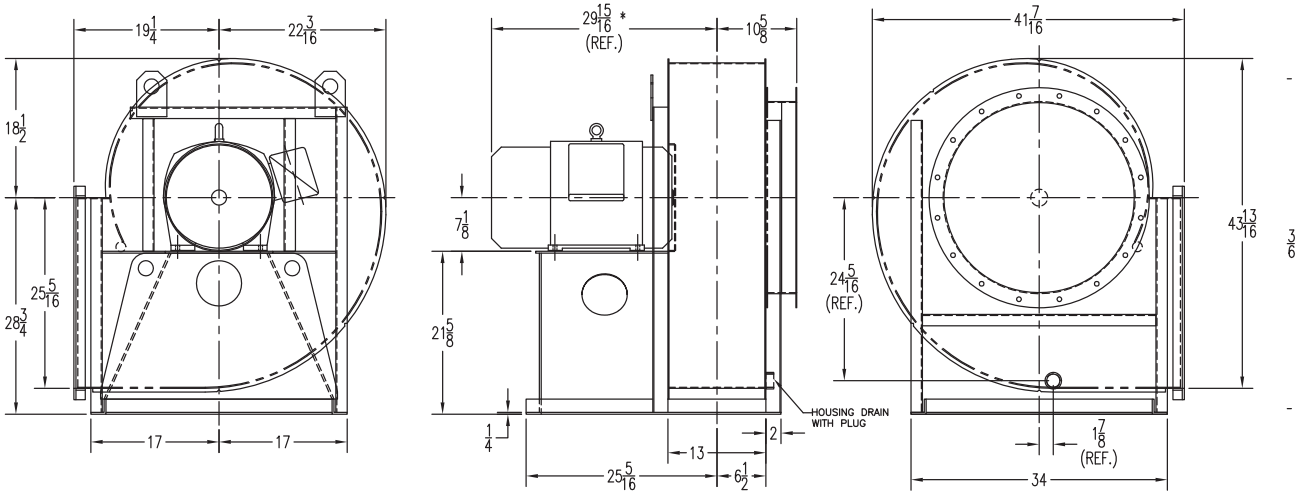

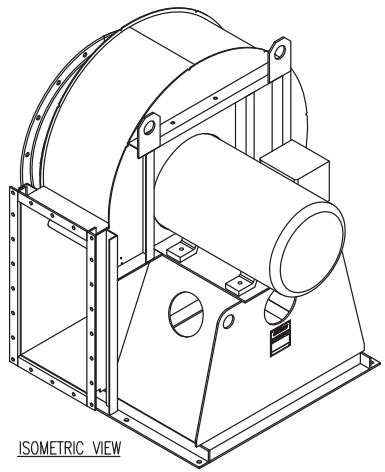

ISOMETRIC VIEW

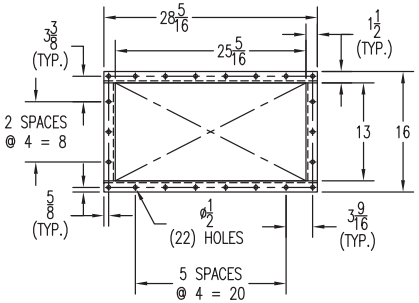

OUTLET FLANGE
PUNCHING DETAIL

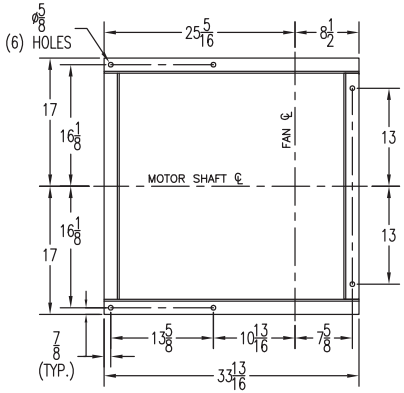

FOUNDATION PLAN

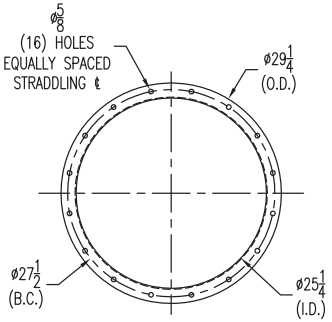

INLET FLANGE
PUNCHING DETAIL

ACCESSORIES:
1. Punched flanged inlet.
2. Punched flanged outlet (see detail).
3. 10" x 10" Quick clamp type access door, located at 3:00 as viewed from drive side.
4. Shaft seal.
5. 316 Stainless steel wheel.
6. 55% Width.
7. G2.5 Balance.
8. Special Crating.
9. Housing Drain with Plug.
10. Lifting Lugs.

NOTES:
A. Motor is a Baldor Model #EM4108T Suitable for Class 1 Div 2 (Mod M15B) with Insulated Bearings (Mod M2F), TEFC Premium, Cast Iron, Foot Mounted, VFD Suitable and VFD Controlled. F-1 Conduit Box Location. Furnished and Mounted by CBC. For Further Details see Title Block Below.
B. Outlet Expansion Joint
Vendor: FlexibleCompensators. Furnished by CBC and Mounted by Others. (Ship Direct)

TOTAL APPROX. FAN WEIGHT(INCLUDING MOTOR): 940 LBS.

QUANTITY OF FANS: 1

CAUTION
PRIOR TO ERECTION AND START-UP, REFER TO SERVICE MANUAL FOR INSTRUCTIONS AND SAFETY PRECAUTIONS.
SCALE NONE

ALL DIMENSIONS IN INCHES
FAN SIZE 60 & BELOW : +/- 1/8
FAN SIZE ABOVE 60 : +/- 1/4

PURCHASER TO PROVIDE OPENINGS IN BUILDING OR STRUCTURE OF SUFFICIENT SIZE TO PERMIT ENTRANCE OF EQUIPMENT PARTS AS SHOWN ON THIS DRAWING.
THIS DOCUMENT CONTAINS MATERIAL AND/OR INFORMATION WHICH IS THE PROPERTY OF CHICAGO BLOWER CORP AND SUPPLIED ONLY ON A CONFIDENTIAL BASIS. NO TRANSMITTAL OR DISCLOSURE SHALL BE MADE TO ANY PERSON, FIRM, OR CORP WITHOUT THE PRIOR WRITTEN APPROVAL OF CHICAGO BLOWER CORP.

REVISIONS

ORDER # 400215 | CUST P.O. # 29569
CUST. SHIP AND SHORE ENV. INC. | JOB NAME SAME
TAG FAN 2021-786 | DESTINATION SIGNAL HILL, CA

PERFORMANCE

CFM	OV FT/MIN	SP IN W.G.	RPM	BHP @ OPER. DENSITY	BHP @ .075 LB/CU-FT	TEMP Deg. F.	ALT. FEET	OPER. DENSITY LB/CU-FT
4814	2154	25	3500	25.3	25.3	70/70	250	0.0779

MOTOR DATA

HP	RPM	CURRENT PHASE	CURRENT HERTZ	CURRENT VOLTAGE	FRAME	TYPE ENCLOSURE	SERVICE FACTOR
30	3600	3	60	230/460	286TS	TEFC	1.15

CHICAGO BLOWER CORPORATION
1675 GLEN ELLYN ROAD, GLENDALE HEIGHTS, IL 60139

TITLE PFD CUSTOMER DRAWING
DESIGN 1903, SIZE 2214, BH DISCHARGE, CW ROTATION
55% SISW, ARRANGEMENT 4

DR. ZS 08/12/21
CK. TES 08/13/21
CT.
DWG. NO. 400215-01
REV. A

Description

Job Description:	**Main Fan**
Reference:	**Selection A**
Fan Type:	**Package Forced Draft, Airfoil, Direct Drive**
Fan Model:	**Design 1903 PFD**
Fan Size:	**2214**
Fan Width:	**53.4%**

Performance

Values are in accordance with AMCA Standard 210

	Flow (ACFM)	SP (IN. WG)	Density (LB/FT³)	Temp. (° F)	Elev. (FT)	Speed (RPM)	Power (BHP)	Power @ 70° F (BHP)	Static Eff. (%)	OV (FT/MIN)	Damper Opening (%)
Design	4814	25	0.0779	70	250	3500	25.3		73.4	2154	0

Fan Discharge Area (FT²)	2.235

Max Airstream Temperature (° F)	70

Maximum Speeds at 70° F (RPM)

HD	3500

Sound

Values are in accordance with AMCA Standard 300

External Sound Power Levels (dB)

Center Hz	63	125	250	500	1000	2000	4000	8000
L_{wi}	101	108	110	106	99	97	92	87
ERC	10	5	2					

Sound Pressure 3 FT from Fan (dBA): 100
L_{wi} (L_{wo}) is sound power at the fan inlet (outlet)/airstream, less ERC.
Sound Pressure, Radiated, 3 FT from 10 GA housing 78 dBA.

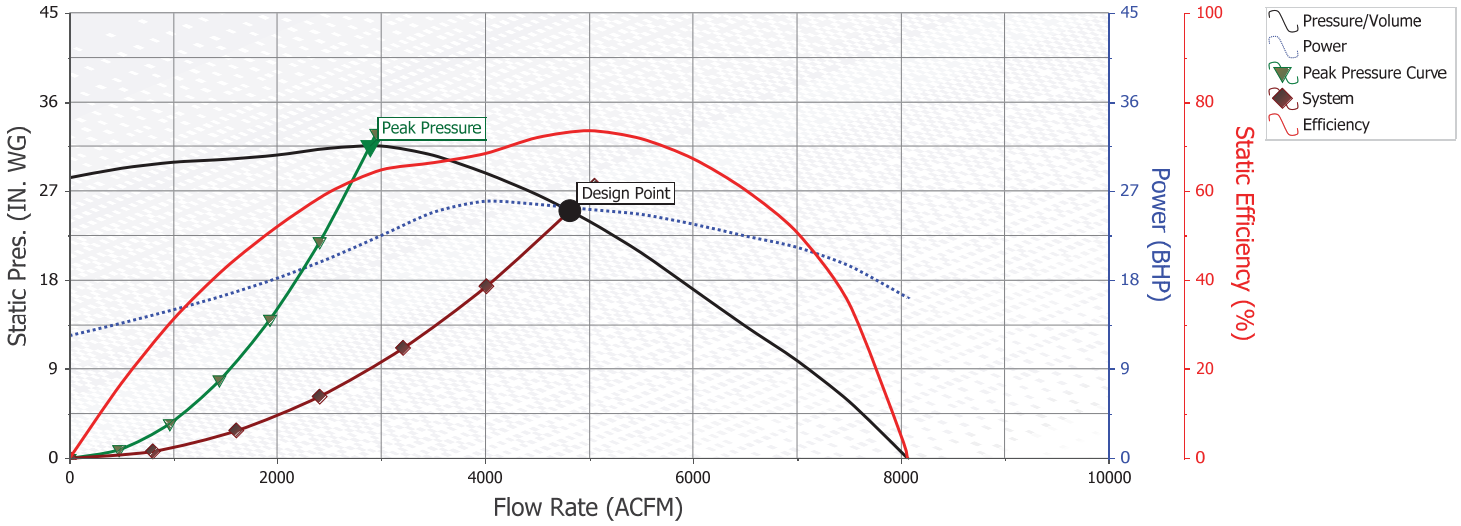

CAUTION: FAN MUST NOT OPERATE LEFT OF PEAK PRESSURE CURVE, EXCEPT FOR START-UP

Combustion Fan

CBC FAN ASSEMBLY NO. USING NEW BASE IN 2018: 53-1-0297-13-01-04-N-N-02-01-Y-01

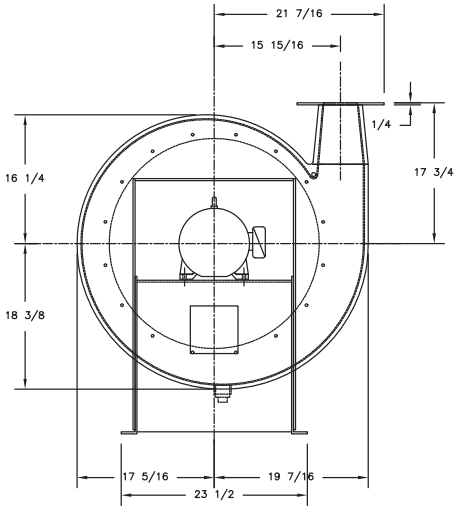

SIDE ELEVATION

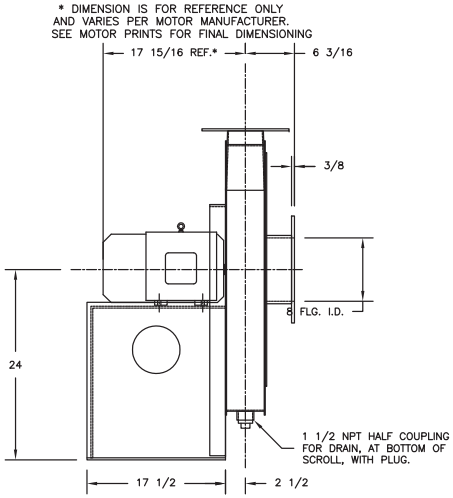

FRONT ELEVATION

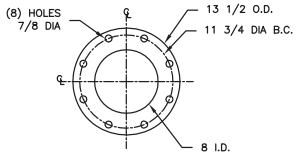

INLET FLANGE
PUNCHING DETAIL

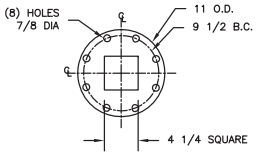

OUTLET FLANGE
PUNCHING DETAIL

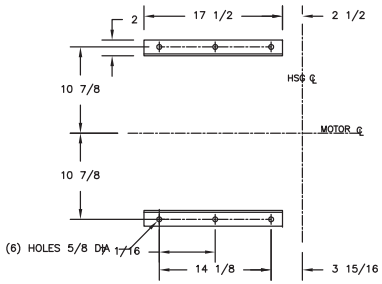

FOUNDATION PLAN

ACCESSORIES
1. Punched Flanged Outlet-std. (shown)
2. Punched Flanged Inlet (shown)
3. 4-Wall Crate
4. Housing Drain and Plug (shown)
5. Shaft Seal

NOTES
A. Inlet and Outlet flanges meet std. ANSI 125/150# flange punchings.
B. Motor is furnished and mounted by CBC. See motor data below in title block.

TOTAL APPROX. FAN WGT. WITH MOTOR LESS ACCESSORIES: 417 LBS.

QUANTITY OF FANS: 1

CAUTION

PRIOR TO ERECTION AND START-UP, REFER TO SERVICE MANUAL FOR INSTRUCTIONS AND SAFETY PRECAUTIONS.

SCALE NONE

PURCHASER TO PROVIDE OPENINGS IN BUILDING OR STRUCTURE OF SUFFICIENT SIZE TO PERMIT ENTRANCE OF EQUIPMENT PARTS AS SHOWN ON THIS DRAWING.

THIS DOCUMENT CONTAINS MATERIAL AND/OR INFORMATION WHICH IS THE PROPERTY OF CHICAGO BLOWER CORP AND SUPPLIED ONLY ON A CONFIDENTIAL BASIS. NO TRANSMITTAL OR DISCLOSURE SHALL BE MADE TO ANY PERSON, FIRM, OR CORP WITHOUT THE PRIOR WRITTEN APPROVAL OF CHICAGO BLOWER CORP.

REVISIONS

ALL DIMENSIONS IN INCHES
FAN SIZE 60 & BELOW : +/- 1/8
FAN SIZE ABOVE 60 : +/- 1/4

JOB # 400216		CUST P.O. # 29569	
CUST. SHIP AND SHORE ENV. INC.		JOB NAME SAME	
TAG FAN P.O. 29569; 2021-786		DESTINATION SIGNAL HILL, CA	

PERFORMANCE

CFM	OV FT/MIN	SP IN W.G.	RPM	BHP @ OPER. DENSITY	BHP @ .075 LB/CU-FT	TEMP Deg. F.	ALT. FEET	OPER. DENSITY LB/CU-FT
252	1287	34	3455	3.62	3.62	70/70	250	0.0743

MOTOR DATA

HP	RPM	CURRENT PHASE	CURRENT HERTZ	CURRENT VOLTAGE	FRAME	TYPE ENCLOSURE	SERVICE FACTOR
5	3600	3	60	230/460	184T	TEFC	1.15

CHICAGO BLOWER CORPORATION
1675 GLEN ELLYN ROAD, GLENDALE HEIGHTS, IL 60139

TITLE D/53 PRESSURE BLOWER ASSEMBLY
MODEL H1 A/4 184T MOTOR
CCW ROTATION UB DISCHARGE

DR.	DD	07/06/21	DWG. NO.
CK.	GW	07/07/21	400216-02
CT.			REV. A

VERSION 1.17

Description

Job Description:	**Combustion Blower**
Reference:	**Selection A**
Fan Type:	**Pressure Blower Centrifugal Fans**
Fan Model:	**Design 53 Pressure Blower**
Fan Size:	**H1 (Outlet Pipe Size 6 IN.)**
Fan Width:	**100%**

Performance

Values are in accordance with AMCA Standard 210

	Flow (ACFM)	SP (IN. WG)	Density (LB/FT³)	Temp. (° F)	Elev. (FT)	Speed (RPM)	Power (BHP)	Power @ 70° F (BHP)	Static Eff. (%)	OV (FT/MIN)	Damper Opening (%)
Design	252	34	0.0743	70	250	3455	3.62		37.31	1287	0

Fan Discharge Area (FT²)	0.2

Max Airstream Temperature (° F)	70

Maximum Speeds at 70° F (RPM)

Max Speed	3600

Sound

Values are in accordance with AMCA Standard 300

External Sound Power Levels (dB)

Center Hz	63	125	250	500	1000	2000	4000	8000
L_{wi}	85	92	96	93	89	85	81	77
ERC	18	12	7	3	1			

Sound Pressure 3 FT from Fan (dBA): 87
L_{wi} (L_{wo}) is sound power at the fan inlet (outlet)/airstream, less ERC.
Sound Pressure, Radiated, 3 FT from 10 GA housing 68 dBA.

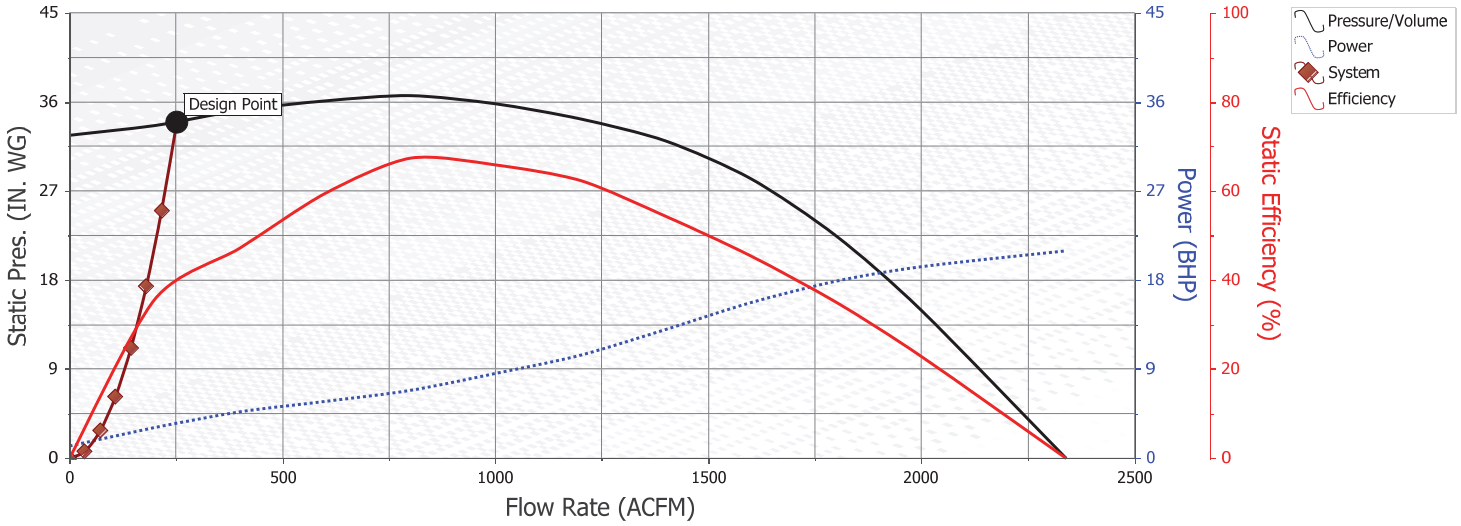

APPENDIX D

Burner Certified Drawings and Specifications

Datasheet 205-5
11/23/2011

Eclipse ThermJet Burners

Model TJ0100

Version 2

Parameter	Burner Velocity		Model TJ0100
Maximum Input Btu/h (kW)	Medium & High Velocity		1,000,000 (293)
Minimum Input, On-Ratio Btu/h (kW)	Medium & High Velocity		100,000 (29)
Minimum Input, Fixed Air Btu/h (kW)	Medium & High Velocity		20,000 (6)
Gas Inlet Pressure Required "w.c. (mbar) Fuel Pressure at Gas Inlet (Tap "B" - see page 3)	High Velocity	Natural Gas	12.5 (31.0)
		Propane	13.5 (34.0)
		Butane	14.5 (36.0)
	Medium Velocity	Natural Gas	5.5 (14.0)
		Propane	8.0 (20.0)
		Butane	7.5 (19.0)
Air Inlet Pressure Required "w.c. (mbar) 15% Excess Air at Maximum Input (Tap "A" - see page 3)	High Velocity	Natural Gas	16.5 (41.0)
		Propane	17.0 (43.0)
		Butane	17.0 (43.0)
	Medium Velocity	Natural Gas	9.0 (23.0)
		Propane	9.0 (23.0)
		Butane	9.0 (23.0)
High Fire Flame Length Inches (mm) (Measured from End of Combustor)	High Velocity	Natural Gas	33 (835)
		Propane	34 (865)
		Butane	35 (890)
	Medium Velocity	Natural Gas	38 (965)
		Propane	37 (940)
		Butane	42 (1065)
Maximum Flame Velocity ft/s (m/s) 15% Excess Air at Maximum Input	High Velocity		630 (192)
	Medium Velocity		310 (95)
Maximum Combustion Air Temperature	300°F (149°C). For higher temperatures, use TJPCA (Data 206).		
Flame Detection	Flamerods can be used with all combustors and operating temperatures up to 2,200°F (1,204°C). UV scanners can be used with all combustors.		
Fuel	Natural gas, propane or butane. For any other mixed gas, contact Eclipse for orifice sizing.		
Approvals	АИ30		

- All information is based on laboratory testing in neutral (0.0" w.c.) pressure chamber. Different chamber size and conditions may affect the data.
- All information is based on standard combustor design. Changes in combustor will alter performance and pressures.
- All inputs based upon gross calorific values.
- Eclipse reserves the right to change the construction and/or configuration of our products at any time without being obliged to adjust earlier supplies accordingly.
- Plumbing of air and gas will affect accuracy of orifice readings. All information is based on generally acceptable air and gas piping practices.

ECLIPSE®
Innovative Thermal Solutions

Performance Graphs

Operational/Ignition Zone

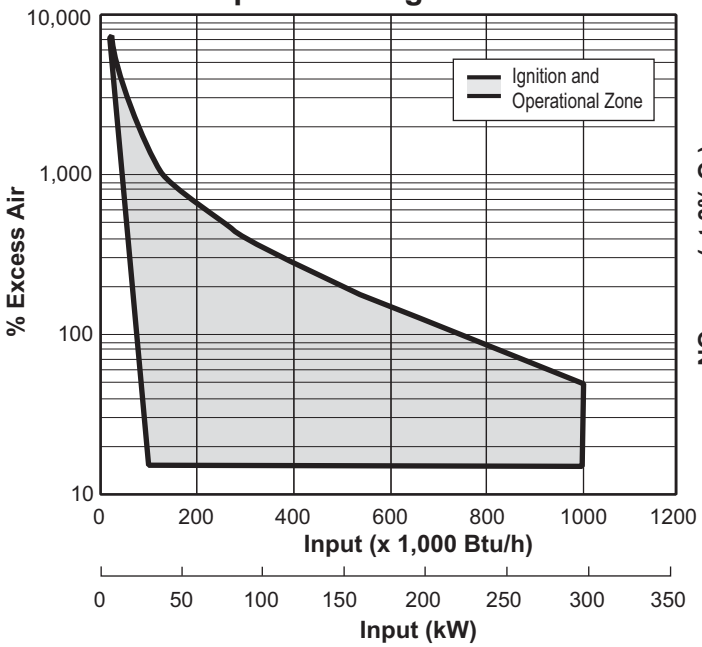

NO_x Emissions

(High Velocity Combustor)

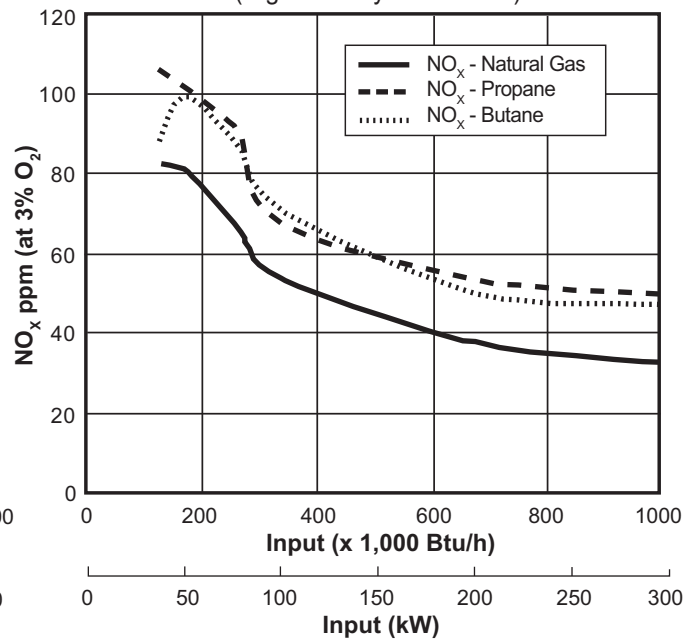

Correction factor for medium velocity combustor is 1.20. Emissions data based on on-ratio control, firing 15% excess air, corrected to 3% O_2.

Emissions from the burner are influenced by:

- Fuel type
- Combustion air temperature
- Firing rate
- Chamber conditions
- Percent of excess air

For estimates of other emissions, contact Eclipse.

Gas Orifice ΔP vs. Input

(Measured from Tap B to Tap D)

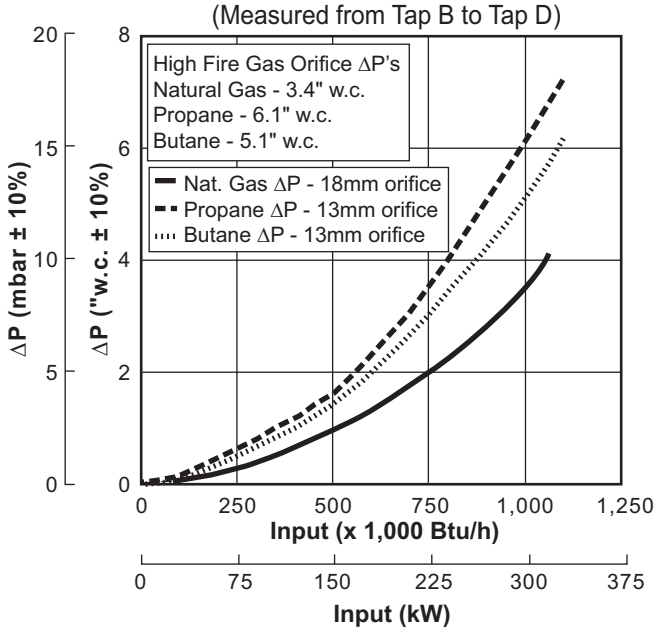

Air Orifice ΔP vs. Input

(Measured from Tap A to Tap C)

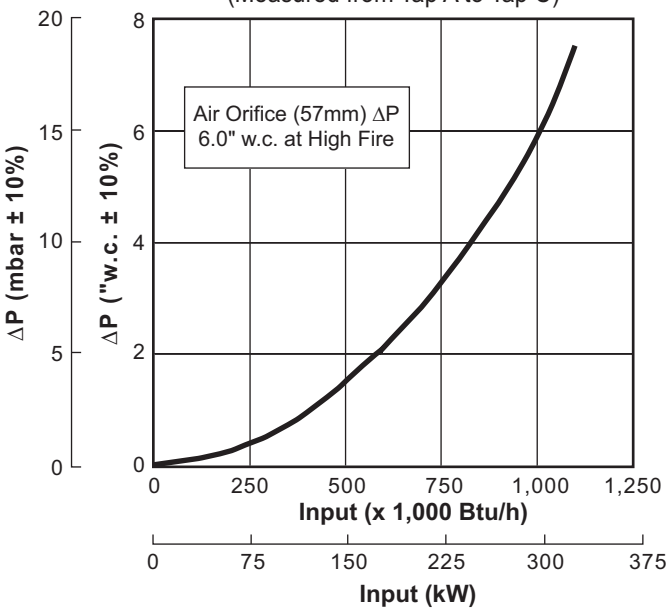

Dimensions in inches (mm)

Burner Housing

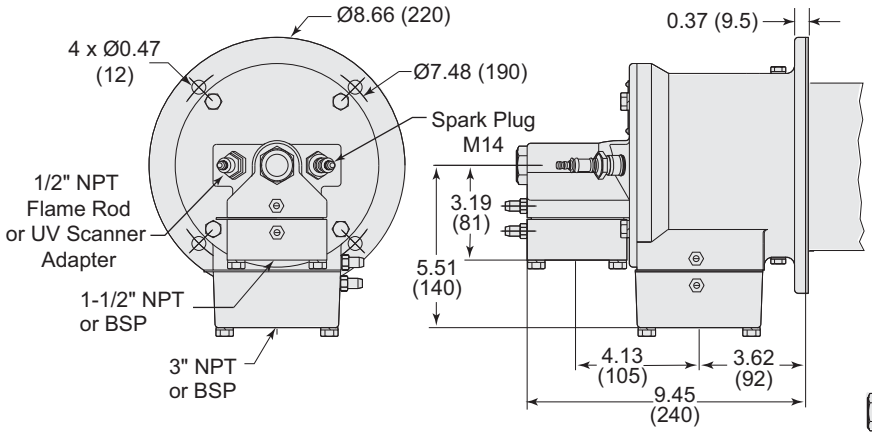

Burner weight less combustor: 42 lbs (19 kg)

Tap Locations

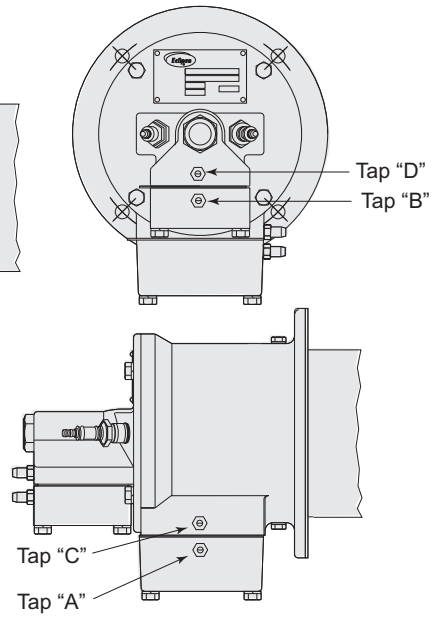

Combustor

Exhaust Outlet Diameter: High Velocity: Ø2.13 (54)
Medium Velocity: Ø3.0 (76.4)

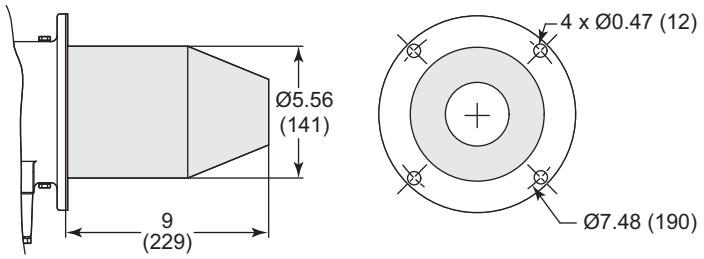

Alloy Tube (AISI 310)
Weight: 3.2 lbs (1.45 kg)
Max Chamber Temp: 1,750°F (950°C)

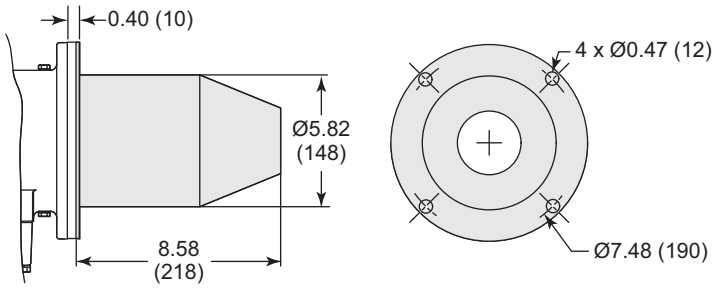

Silicon Carbide Tube
Weight: 3.2 lbs (1.45 kg)
Max Chamber Temp: 2,500°F (1371°C)

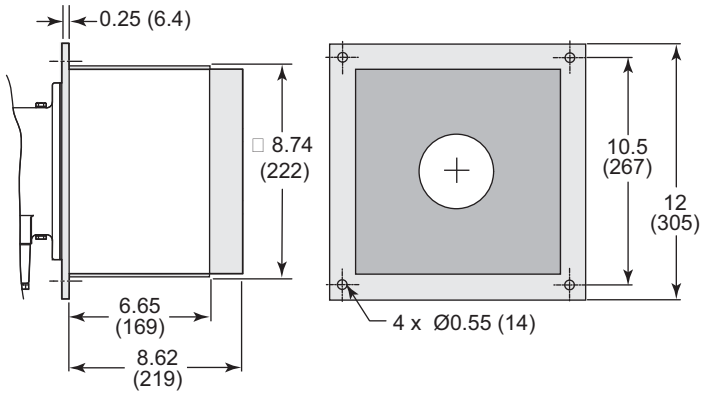

Refractory Block
(w/RA330 wrapper)
Weight: 61.3 lbs (28 kg)
Max Chamber Temp: 2,800°F (1538°C)

Down Firing Block

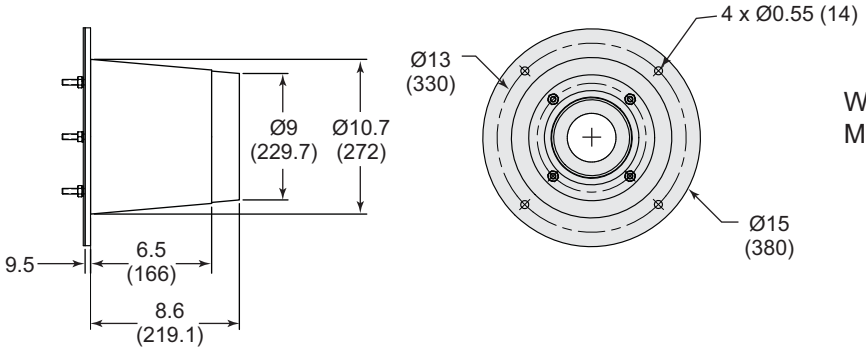

Weight: 75 lbs (34 kg)
Max. Chamber Temp: 2800°F (1535°C)

ECLIPSE®
Innovative Thermal Solutions
www.eclipsenet.com

APPENDIX E

Mechanical Components

SHIP & SHORE ENVIRONMENTAL, INC.
Clean Air Solutions for Industry

GAS TRAIN	
Item	**DESCRIPTION**
P-1	1 1/2” NPT Multipurpose Standard Ball Valve w/tap UL/AGA/FM
P-2	0-10 PSI Pressure Gauge, ¼” NPT bottom tap 2 ½” Diameter, Temperature Limits: -40 to 150°F (-40 to 65°C)
P-5	0-200'WC. Pressure Gauge, ¼” NPT bottom tap 2 ½” Diameter, 0-116-OZ/in2, Temperature Limits: -40 to 150°F (-40 to 65°C)
P-7	1 1/2” NPT Main Gas Regulator, Outlet Pressure: 11/2 to 3 PSI, w/IRV
P-8	Spring, For item P-7
P-9A	Pressure Switch Low, 0-60" wc, 24 VDC NEC Class I Divisions 1,2, Groups A, B, C, D
P-10A	Maxon Series 4000 Valve, 1.5” NPT, Standard Flow, Normally closed shut off valve, Class I Div. 2
P-11	Visual Indicator For P-10 (SSOV-G1) Above
P-14	Closed Position Indicator Switch For Item P-10 (SSOV-G1)Above, comes with P-10A
P-15A	Pressure Switch High, 0-100" wc, 24 VDC NEC Class I Divisions 1,2, Groups A, B, C, D
P-16	Eclipse Thermjet TJ0100, 1 MMBTU/hr
P-17	Dynamic Self-Check Ultraviolet Flame Detector (UV SCANNER), HOUSING, Quartz Viewing Window; rated for 100 psi
P-18	Spark Igniter For Burner, (Comes With Burner)
P-19	Dungs Ignition Transformer, Primary Voltage120V/5-60Hz, Secondary Voltage, Allanson type 1092-S, input Current: ±150%@50Hz,1.6; ±150%@60Hz,0.5
P-19A	Hazardous Location Enclosure outer dimensions 12 1/4" x 14 1/4" x 8 1/4", inside dimensions 7 5/8" x 9 5/8" x 6", NEC Class I, II, III Div. 1, 2
P-19B	7" x 9" Panel For Hazadous Location Enclosure
P-20	Spark Plug Boot, 90 degrees
P-21	High Temperature Ignition Wire, 5 Feet Long
P-22	Cable for self checking UV Scanner with Connector, 10 foot (3 m)
P-30	1.5" NPT Ratio Regulator (Proportionator) Zero Governor w/Low Fire Bypass
P-30A	FRG Proportionator Low Fire Bypass
P-31	1 1/2" NPT Adjustable Limiting Orifice Valve, Temp. range -20F-225F
P-56	1 1/2” NPT Y-Strainer, Rating 400 PSI @ -20F to 150F

SHIP & SHORE ENVIRONMENTAL, INC.
Clean Air Solutions for Industry

PROCESS	
Item	**DESCRIPTION**
P-100A	Fume Vent Damper, Butterfly Valve 6” Diameter
P-101A	Process Isolation damper, Butterfly valve, 6” Diameter
P-103	Fresh Air Inlet Damper, Butterfly Valve, 18" Diameter
P-104	Main Fan Chicago Blower
P-105	Air Pressure Switch Nema 4, ~20” W.C., Outdoor Use
P-106	Combustion Blower AirPro
P-107A	Pressure Differential Switch, 0.15-0.5" W.C., 24 VDC
P-110A	Dwyer Smart pressure transmitter, range -14.5 to 21 psi with LCD display. Wetted
P-117	(1)Double Acting Rack & Pinion Actuator, ISO Mount, with Double Travel Stops (1)Explosion Proof Aluminum Limit Switch, (2) SPDT Mechanical Switches, 4 amps Max, 250 Volts Max, Visual Dome Indicator (Red for Closed, Green for Open), Black Housing Color, cCSAus Certified Class I, Division 1, Groups B, C & D T6; Class II, Division 1, Groups E, F and G; Class III; Class I, Zone 1, AEx d IIC, T6; Class II, Zone 21 AEx tb IIIC T65°C Db; Ex d IIC, T6; Ex tb IIIC T65°C Db, Ambient Temperature -20 C to +60C, 3/4" NPT Conduit Connection. Per Drawing P2053
P-118	Combustion Blower Air Intake Filter & Silencer, 8” Flange, 2125 CFM, 2"-3” WC Pressure Drop, Stoddard Silencers, Inc.
P-119	Hot By Pass - Actuator Motor, 4-20 mA, 115VAC, 290 in-lbs output Torque, modulating control, (2) Auxiliary limit switches, 4.5 seconds response time for full cycle
P-126A	Combustion Air Automatic Control Butterfly Valve, 3" NPT, Reduced port
P-134	Barometric/Vacuum Breaker 10" Square Damper (by SSE)
P-200	Thermocouple, Type K, 12” Long, Dual Element, Alloy INCONEL, Ungrounded, 0.25 Dia, Max. Temp. : 2150°F IP68, NEC Class I Divisions 1,2 Groups B, C, D, NEC class II Divisions 1, 2 Groups E, F, G, NEC Class III Divisions 1, 2, NEMA 4X
P-200A	Thermocouple, Type K, 12" Long, Dual Element, 316 SS, Ungrounded, 0.25 Dia., Max. Temp.: 1000°F IP68, NEC Class I Divisions 1,2 Groups B, C, D, NEC class II Divisions 1, 2 Groups E, F, G, NEC Class III Divisions 1, 2, NEMA 4X
P-200B	Thermocouple, Type K, 9" Long, 0-500°F, Dual Element, 316 SS, Ungrounded, 0.25 Dia., Max. Temp.: 500°F IP68, NEC Class I Divisions 1,2 Groups B, C, D, NEC class II Divisions 1, 2 Groups E, F, G, NEC Class III Divisions 1, 2, NEMA 4X
P-201	TDY/PRG/4-20mA/10-42DC PC-programmable temperature transmitter with display, 2-wire DC powered by output loop, Explosion-Proof enclosure. Configuration cable, USB comes with the transmitter
P-221	Proximity Sensor, M30, Sensing Range 15mm. Product Certifications: INERIS 04 ATEX 002X
P-221B	Cable For P-221, 2 Meters Long
P-230	Magnehelic Differential Pressure Gauge, 15-0-15” W.C.
P-231	Magnehelic Differential Pressure Gauge, 0-6"W.C. AT-2000, ATEX Enclosure
P-240	Hot By Pass Damper 6" sq flow opening (overall 16" sq opening) - Alloy INCONEL
P-245	Spring-Tempered Steel Jumbo Compression Spring, 6" Length, 4.406" OD, 0.625" Wire Diameter
P-259	Infrared 0-100% LEL sensor

SHIP & SHORE ENVIRONMENTAL, INC.
Clean Air Solutions for Industry

PNUEMATICS	
Item	**DESCRIPTION**
P-300	1” NPT Brass Ball Valve
P-301	1” NPT Bronze Y-Pattern Swing Check,
P-302	ASME-Code Compressed Air Tank, 15 Gallon Tank - Vertical tank
P-304	3/8” NPT ASME Brass Soft-Seated Pop Safety Valve Set at 150 PSIG
P-305	0-150 PSIG Pressure Gauge, ¼” NPT, Bottom Tap, 2 ½” Dial
P-306A	Ashcroft, B series, B724B, 0-100" wc, 24 VDC
P-307	Compressed Air Coalescing Filter, 1" NPT, Grade 6 Coalescing
P-308	Compressed Air Filter/Regulator, 1” NPT, Filter Metal Bowl –40 Micron Auto Drain, w/gauge 0-8 Bar
P-308A	1/4" NPT Air Filter Regulator 0-120PSI - Die-cast Aluminum body with SST Gauge, 5 Micron filter, 32 to 158 Deg F Max.
P-310	Inline Compressed Air Filter, ¾” NPT
P-310A	Inline Compressed Air Filter, Miniature Air Filter, ½” NPT High Pressure, 40 microns, Aluminum Body,Max. temperature 200° F, Max. Pressure 500 PSI, 142 Maximum scfm @ 100 psi 142, Connections are NPT female
P-313A	3/4" Air Cylinder Hose Length As Required
P-314	¼” NPTF Female X Female, Lever Handle, Brass stop Cock Valve,For P-17 UV Scanner
P-320	Single Solenoid, 1/2" NPT, 24VDC, 40-175 PSIG Class 1, Div. I / Class 1, Div. II
P-321	NAMUR Mount 3/2, 5/2 convertible solenoid with Manual operator, 120VAC/60Hz, 110VAC/50Hz, Class F Coil, 6.3 Watt, 5 Deg F to 104 Deg F, NEMA 3,3S,4,4x,6,6p,7,9, Class I, Div 1 (GRP A - D), Class II, Div 1 (GRP E-G), 1/2" Coil Connection 18" Flying Leads, 1/4" NPT Air Supply Conn's, 1/8" NPT Exhaust Conn's
P-323	3/4" Inline mist lubricator, Hi-Flow, Bowl capacity 18 OZ, Min Flow 6.6 scfm @100psig, pressure rating 0-250 psig, temperature rating 32F-175F.
P-332	Air Cylinder Muffler, 3/4" NPT
P-350	Pneumatic Air Cylinder, Pneumatics Series A, Non-Lubricated, Cyl Size 3 1/4” Dia. Bore by 9” Stroke, 1” Dia. Rod. Thread Style 9 (NFPA Style SF), Short female-full female threat 1”-14, Head rectangular flange mount Style J (NPFA MFI). Stainless steel tie rods, No cushions, Head: port size 1/2” NPTF port pos.-1,3 Cap: port size 1/2” NPTF port pos.-1,3
P-350A	¾” Quick Relief Valves
P-350B	¾” x ¾” x ¾” Speed Control
P-359	Disposable Desiccant Air Dryer for UV scanner item P-17. 1/4" Pipe size, 15 SCFM max @ -30 F Dew Point, 3-3/4" high x 1-3/4" Wide. Max Pressure 125 PSI.Max Temp 130F. Inlet connection is NPT female. Outlet connection is NPT male

MODEL 3010BR

The AMI Model 3010BR Trace Hydrogen Sulfide (H2S) analyzer provides H2S monitoring in an unprecedented low cost, compact size, virtually maintenance-free package. Using AMI's patented cell block technology, it allows a specially modified electrochemical sensor to operate on oxygen-free sample gas, eliminating the need for hazardous-waste generating lead acetate tape.

- Display reads hydrogen sulfide from 0.00ppm up to 200 (or optionally 2000ppm) with no range changes
- Analog output and alarms can be configured to operate over any of four ranges from 0-10ppm to 0-200ppm (optional 2000ppm) for best resolution.
- CSA approved to meet Class 1 Div. 1 Group BCD with a flammable sample requirements
- Complete sample system built in to AMI's patented cell block.
- Easily replaceable sensor, no tools required.
- 0-200ppm H2S sensor standard, 0-2000ppm optional.
- Simple, versatile installation.
- Operates either off 115VAC or 10-28VDC with very low power consumption
- Available integral explosion-proof heater for cold environments
- Field selectable analog output - 1-5V or 4-20mA, isolated.
- Analog output can be calibrated to a SCADA system or flow computer.
- 2 independent, fully adjustable alarm settings with relay contacts.
- Complete alarm logic programming: latching or non-latching, open or close on alarm, high alarm or low alarm, alarm-on delays and alarm hold-off.
- Integral data logger: Logs data for 15 days @ 1min intervals and 30 days @ 2min. intervals, etc.
- USB connectivity to a PC: Allows complete access to the internal functions.
- Logs sensor calibration history: Shows last five calibrations with calibration gas used.
- ModBus: Industry standard protocol over RS485.

The Model 3010BR provides a complete, industry proven electronics package and integrated sample system. It is offered for about a third the price of competitive models. AMI's patented cell block allows the analyzer to be built with almost no possibility of internal leaking, with minimal volume and with front-panel sensor access. All sample handling components – the flow meter, needle valve and a four-way sample/span/off selection valve – are integrated into a solid metal block. Connections between them are drilled passages in place of long lengths of tubing. The result is a highly reliable sample system with all necessary components provided, and a fast response time – hydrogen sulfide is a "sticky" gas so minimizing the sample path is vital to get the least possible wetted surface area.

The expected sensor life is from one to two years depending on environment. The sensor is immediately accessible on the front panel of the analyzer, and can be replaced in seconds.

For low temperature operation an integral (approved) explosion-proof heater can be supplied. This unit directly heats the cell block and thus is extremely efficient, allowing operation off a solar panel/battery system down to -20°F. The heater option does not require additional enclosures or wiring, or change the footprint in any way. For extreme environments down to -40F, an outer insulated enclosure can be supplied, but no additional power is required.

The analyzer is approved by CSA for operation in a Class 1 Division 1 Group BCD hazardous area with a flammable gas as the sample. No additional safety barriers are needed. The analyzer can be calibrated and sensor replaced without declassifying the area because the analytical electronics are intrinsically safe, protected by internal safety barriers.

The electronic and software package is exceptionally complete, and all features are provided as standard with no additional cost (except for the heater). It is capable of operating off a battery and solar panel, and it logs power brown outs and failures should they occur. It also logs the ambient and the sensor temperatures and so can be used to alarm on the failure of a catalytic heater if one is used in a meter building. It tracks the life of the sensor and indicates the remaining life. It logs the calibration history. It logs the hydrogen sulfide readings over its operational (output) range, and also tracks excursions of up to ten times that range.

The analyzer can be wall-mounted with 4 externally accessible screws, or bolted to a 2" pipe using standard U bolts.

FEATURES

- 4 user selectable output ranges to choose from
- High resolution 3 ½ digit LCD
- 2 fully adjustable Hydrogen Sulfide (H2S) Concentration alarms
- Alarm delays
- Alarm hold off/Bypass
- RFI protected
- 1-5VDC and 4-20mA. isolated analog output signals
- USB virtual comport and Modbus Bidirectional RS485 communication for advanced features.
- Datalog – 15 days hydrogen sulfide reading recording at 1 minute per sample
- Calibration history – stores the last five calibrations with time, date, span factor and calibration gas.
- Brown-out history – stores the last five brown-outs and recoveries.
- Power up history – stores the last ten times the unit was powered up.
- Advanced analog output calibration.
- Power requirements: Choice of 10-28VDC or115VAC power
- Low minimum detection limit
- Excellent repeatability
- Extended operating temperature range
- Patented Cellblock Technology: Allows for all components such as flow control valve, flowmeter, and 4-way selector valve to be an integral part of the cellblock. This eliminates long lengths of tubing and fittings.
- Benefits of this design include compact size, faster response times and front panel sensor access without the need for tools.
- Area Classification: CSA approved to UL-913 and UL-1203 Class 1, Div. 1, Groups B,C,D with a flammable gas sample
- Wall mount or 2.0" pipe
- Compact size
- 2 year warranty for analyzer, parts and labor
- 1 year sensor warranty, life expectancy 1-3 years
- Requires optional AMI User Interface software

SPECIFICATIONS

- 4 standard user selectable output ranges to choose from: 0-10ppm, 0-50ppm, 0-100ppm, 0–200ppm
- Optional output ranges available: 0-500ppm, 0-1000ppm and 2000ppm
- The selection of an output range simultaneously controls the two alarms, the analog output and the data logger so that all 4 functions operate on the same range
- Digital display: High resolution 3 ½ digit LCD. Reads full scale from 0.00ppm to 200ppm independently of output range selection and 0.00ppm to 2000ppm when using high range sensor.
- Alarms: 2 fully adjustable Hydrogen Sulfide (H2S) concentration alarms Dry contacts 5A. @24VDC/115VAC
- Alarm delays: Programmable from 0-300 minutes
- Alarm hold off: Programmable from 0-120 minutes
- Isolated analog output signal: 1-5VDC or 4-20mARepresents the output range selected: 0-10ppm, 0-50ppm, 0-100ppm, 0-200ppm
- Data logger: Logs data for 15 days @ 1 minute intervals, 30 days @ 2 minute intervals, etc. Represents the output range selected: 0-10ppm, 0-50ppm,0-100ppm,0-200ppm
- Power requirements: 10-28VDC/ 115VAC<70mA. @ 12VDC non heated<24W @12VDC with heated option
- Minimum detection: 50ppb of Hydrogen Sulfide (H2S)
- Repeatability: +/- 1% of range or +/- 0.2ppm of H2S,whichever is greater
- Operating temperature range: 25 to 115˚ F non-heated; -20 to 115˚ F heated option
- Diurnal temperature specification:< +/- 2 % of scale over temperature range
- 90% full scale response times for specified range: 0-100ppm < 120 seconds @ 1.5SCFH; 0-2000ppm < 120 seconds @ 1.5SCFH
- Response to Methyl Mercaptan: 40% of actual concentration
- Response to Sulfur Dioxide: 18% of actual concentration
- Area Classification: CSA approved to UL-913 and UL-1203 Class 1, Div. 1, Groups B,C,D with a flammable gas sample
- Inlet gas pressure: 0.5 to 150psig
- Gas connections: ¼" 316 S.S. compression fittings
- Wetted parts: 316 S.S. fittings, electroless nickel plated cellblock, gold plated contacts, acrylic flow meter and Viton O-rings
- Recommended flow rate: from 1.0 to 1.5 SCFH
- Mounting: Wall mount or 2.0" pipe
- Dimensions: 13.0"W x 9.5"H x 5.0"D
- Weight: 16 lbs.

ADVANCED MICRO INSTRUMENTS

MODEL 3010BX
TRACE H_2S

DEPENDABLE H_2S MEASUREMENTS MADE INCREDIBLY EASY

The **MODEL 3010BX** is AMI's ne**X**t generation Trace H_2S Analyzer. Its patented technologies and superior design make the Analyzer the top pick among engineers and measurement technicians seeking reliable and accurate H_2S measurements in harsh conditions.

SUPERIOR PERFORMANCE

AMI's patented ELIMINATOR CELL BLOCK™ combines all the critical sample handling components, including a flow meter, metering valve, 3-way gas control valve, sensor pocket and pressure sensor, into one solid cross drilled block. This means the gas sample only needs to travel 4 inches to reach the sensor, ensuring a fast accurate measurement while keeping the Analyzer in a compact and robust footprint.

COMMON APPLICATIONS

- NATURAL GAS
- BIOGAS
- WASTEWATER

DESIGNED FOR THE USER

Front-loading H_2S sensor, intuitive controls and compact size are all design features that make installation and maintenance of the **MODEL 3010BX** the easiest of any Trace H_2S Analyzer in its class.

FULL SUITE OF STANDARD FEATURES

AMI's **MODEL 3010BX** comes standard with advanced features, including dual independent alarms, comprehensive alarm logic (fail safe or non-fail safe, latching or non-latching and independent alarm delays), alarm bypass and 3 levels of security settings. Automatic data logging provides detailed time-stamped records of H_2S measurement, gas pressure, temperature, supply voltage and power brown-out history.

UNMATCHED VALUE

The unique design of the **MODEL 3010BX** keeps cost low while offering unmatched features and easily handling some of the most difficult H_2S measurement requirements.

MODEL 3010BX

PHYSICAL & ELECTRICAL SPECIFICATIONS

WEIGHT	MOUNTING	GAS CONNECTIONS	WETTED PARTS
16.0 lbs (7.26 kg)	Wall Mount or 2.0" Pipe	¼" 316 S.S. compression fittings	316 S.S. fittings, electro-less nickel-plated cell block, gold-plated contacts, acrylic flow meter & O-rings (Viton, kalrez, and Buna-N)

POWER	
DC	**AC**
10 – 24 VDC, 150 mA max (non-heated) 10 – 24 VDC, 2.2 amps max (heated)	100 – 240 VAC, 150 mA max (non-heated) 100 – 240 VAC, 550 mA max (heated)

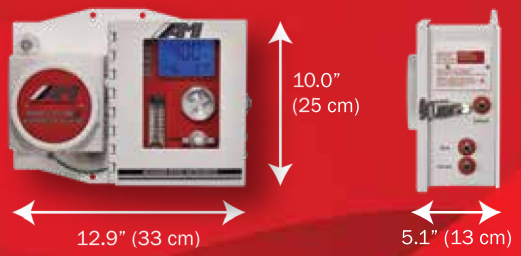

OPERATIONAL SPECIFICATIONS

Note: 2-year Warranty for Parts & Labor for any defects in materials or workmanship. 1-year Warranty for H_2S sensors

OUTPUT RANGES (USER SELECTABLE)		AMBIENT OPERATIONAL TEMPERATURE			FLOW RATE (RECOMMENDED)	INLET GAS PRESSURE	OPERATIONAL ALTITUDE	
STANDARD RANGES	OPTIONAL HIGH RANGE SENSOR	NON-HEATED	HEATED	HEATED WITH EXTREME WEATHER ENCLOSURE			DC	AC
0 – 10 ppm 0 – 50 ppm 0 – 100 ppm 0 – 200 ppm	0 – 100 ppm 0 – 500 ppm 0 – 1000 ppm 0 – 2000 ppm	25°F to 115°F (–3.9°C to 46°C)	–20°F to 115°F (–29°C to 46°C)	–40°F to 115°F (–40°C to 46°C)	1.0 to 1.5 SCFH (0.5 – 0.75 Lpm)	0.5 – 150 psig (0.03 – 10.3 bar)	≤ 5,500 m (18,000 ft)	≤ 2,500 m (8,200 ft)

SENSOR & ANALYZER PERFORMANCE SPECIFICATIONS

LOW RANGE SENSOR	HIGH RANGE SENSOR	90% FULL SCALE RESPONSE TIMES @ 1.5 SCFH (0.75 Lpm) FOR SPECIFIC RANGES		REPEATABILITY	APPROVALS
Max Range 0 –200 ppm	**Max Range** 0 –2000 ppm	<120 sec for 0 – 100 ppm	<120 sec for 0 – 2000 ppm	±1% of range or ±0.2 ppm of H_2S, whichever is greater	Class I, Division 1,Groups B–D, T4 Class I Zone 0/1, AEx ia/db IIB+H2 T4 Ga/Gb IECEX: Ex ia/db IIB+H2 T4 Ga/Gb ATEX: Ex II 1/2 G Ex ia/db IIB+H2T4 Ga/Gb $-32°C \leq T_{amb} \leq 46°C$

RESPONSE TO OTHER GASES IN THE SAMPLE GAS (GIVEN THAT 100 PPM OF THE LISTED GAS IS PRESENT)

Note: For complete list, contact AMI

Methyl Mercaptan (40 ppm) | Carbon monoxide (4 ppm) | Hydrogen (1 ppm) | Sulfur dioxide (18 ppm)

ANALYZER KEY FEATURES

ELIMINATOR CELL BLOCK™	Contains a Complete Sample System with all components, including the flow meter, metering valve, pressure sensor and 3-way Selection (Sample/Span/Off) Valve, fully integrated
ALARMS	2 fully adjustable concentration alarms with configurable Alarm logic and Relay Contacts, featuring: ▶ Alarm Bypass ▶ Alarm Delays ▶ Trigger Above or Below Setpoint ▶ Latching/Non-latching ▶ Failsafe/Non-failsafe ▶ Open or Close on Alarm
INTERNAL PRESSURE SENSOR	Measures gas inlet pressure from 0 – 150 psig
ANALOG OUTPUTS	1 – 5 VDC and 4 – 20mA isolated output signals and Modbus bi-directional RS485 communication
COMMAND CENTER	Software that works across AMI's Analyzers and gives users access to advanced functions: ▶ Error Status Display ▶ Data Logger (records H_2S measurements, temperature, psig, and power) ▶ Alarm Configurations ▶ Calibration Details
ACCESSORIES	▶ Demister ▶ LRP ▶ Extreme Weather Enclosure

225 Paularino Avenue
Costa Mesa, CA 92626
714.848.5533
www.amio2.com

ADVANCED MICRO INSTRUMENTS

NOTES: UNLESS OTHERWISE SPECIFIED

REVISIONS				
ZONE	REV.	DESCRIPTION	DATE	APPROVED
	A	NEW RELEASE	03/23/20	JR

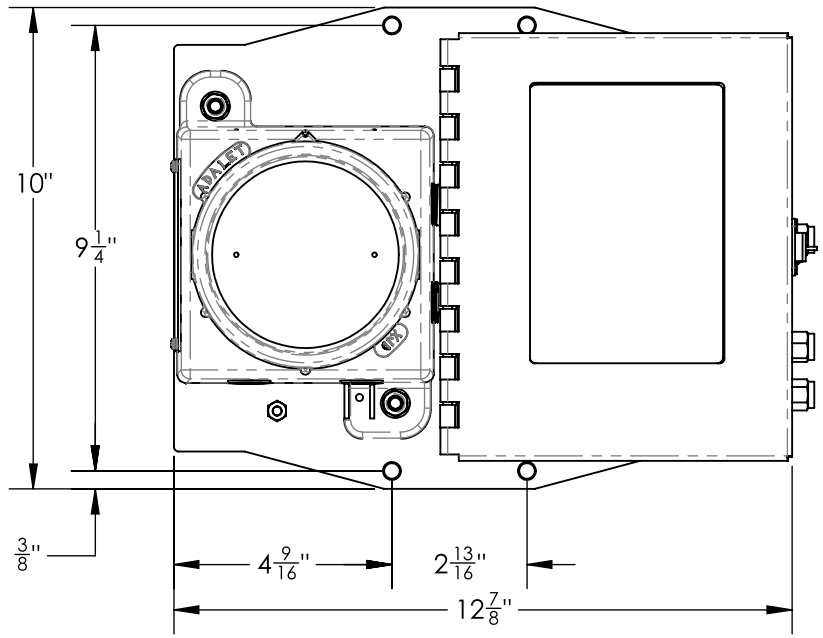

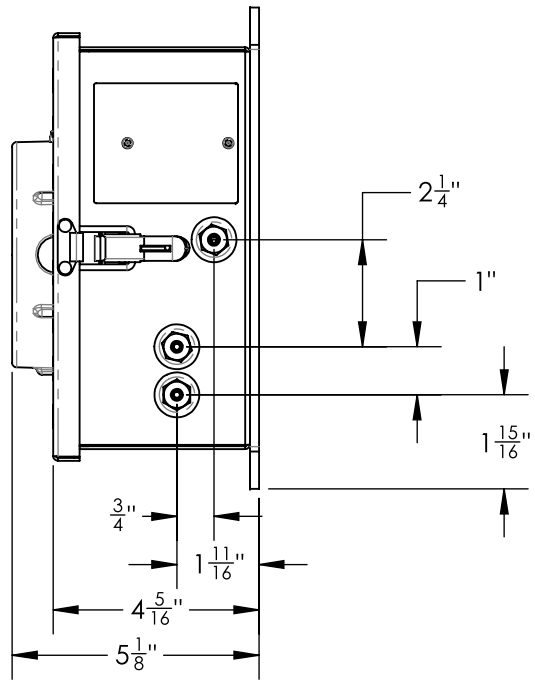

UNCONTROLLED

UNLESS OTHERWISE SPECIFIED:		NAME	DATE
DIMENSIONS ARE IN INCHES TOLERANCES: FRACTIONAL ± 1/32 ANGULAR: ± 1° .x ± 0.050 .xx ± 0.010 .xxx ± 0.005 BREAK EDGES AND REMOVE BURRS: R.005/.005X45° SURFACE FINSH: 64	DRAWN	JR	03/23/20
	CHECKED	-	-
	ENG APPR.	-	-
	MFG APPR.	-	-
	QA APPR.	-	-
INTERPRET GEOMETRIC TOLERANCING PER: ANSI Y14.5M-1994	THIRD ANGLE PROJECTION		
MATERIAL: -	COMMENTS:		
FINISH: -			

Advanced Micro Instruments, Inc.

TITLE: 210BX,2010BX, & 3010BX Installation

E-FILE 4DOD3006

SIZE	DWG. NO.	REV
A	4DOD3006	A

SCALE: 1:4 | WEIGHT: | SHEET 1 OF 1

PROPRIETARY AND CONFIDENTIAL

THIS DOCUMENT IS THE PROPERTY OF ADVANCED MICRO INSTRUMENTS INC. AND IS CONVEYED WITH THE EXPRESS CONDITION THAT IT AND THE INFORMATION CONTAINED IN IT ARE NOT TO BE USED, DISCLOSED, OR REPRODUCED IN WHOLE OR IN PART, FOR ANY PURPOSE WITHOUT THE EXPRESS WRITTEN CONSENT OF ADVANCED MICRO INSTRUMENTS INC., AND THAT NO RIGHT IS GRANTED TO DISCLOSE OR SO USE ANY INFORMATION CONTAINED IN SAID DOCUMENT.

ADVANCED MICRO INSTRUMENTS

MODEL 3010BX

TRACE HYDROGEN SULFIDE ANALYZER

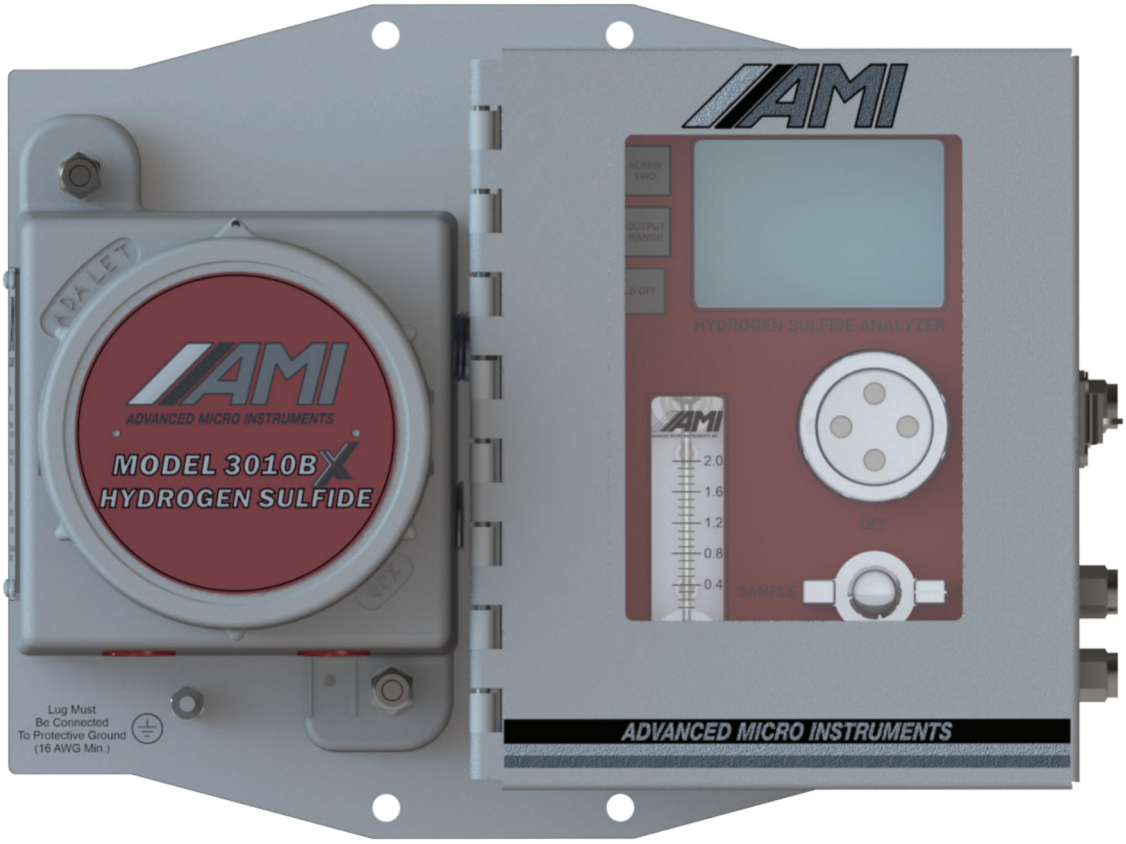

Operator Manual

MODEL 3010BX OPERATOR MANUAL

Special Message from Advanced Micro Instruments (AMI):

Thank you for purchasing this **MODEL 3010BX** for your Trace Hydrogen Sulfide measurement needs. This permanent mount Trace Hydrogen Sulfide Analyzer is the industry's most advanced and contains patented designs and innovations. You will find that it delivers the highest levels of performance and reliability with a full suite of standard features.

Note: Read this manual carefully prior to installation.

If you have any questions, contact AMI at 714.848.5533 or **www.amio2.com**.

TABLE OF CONTENTS

MODEL 3010BX Overview ____ 2
Method of Measurement ____ 3
Key Innovations ____ 4
Safety, Warnings & Cautions ____ 5

Analyzer Installation ____ 8
- Part I: Mounting the Analyzer ____ 8
- Part II: Electrical Connections for the Analyzer ____ 9
  - Initiation of the Pressure Sensor ____ 15
- Part III: Gas Connections ____ 16
  - Initiation of Sample Flow ____ 19

Sensor Installation / Replacement ____ 20
Calibration ____ 22
Analyzer Operation ____ 24

COMMAND CENTER Interface Software Set-up ____ 27
- Remove the Explosion-proof Cover ____ 27
- Establish a Communication Link ____ 27
- Analyzer Output Setup ____ 29
- Alarm Setup ____ 32
- Controls Both Alarms Setup ____ 34
- Datalog Column Setup ____ 35
- Download Data ____ 36

Modbus RS485 Communication Protocol ____ 39
Troubleshooting, Maintenance & Repairs ____ 43
Specifications ____ 47

AMI® Warranty & Support ____ 48
- Limited Warranty/Disclaimer ____ 48
- Limitation of Liability ____ 48
- Limitation of Remedies ____ 48

ANALYZER OVERVIEW

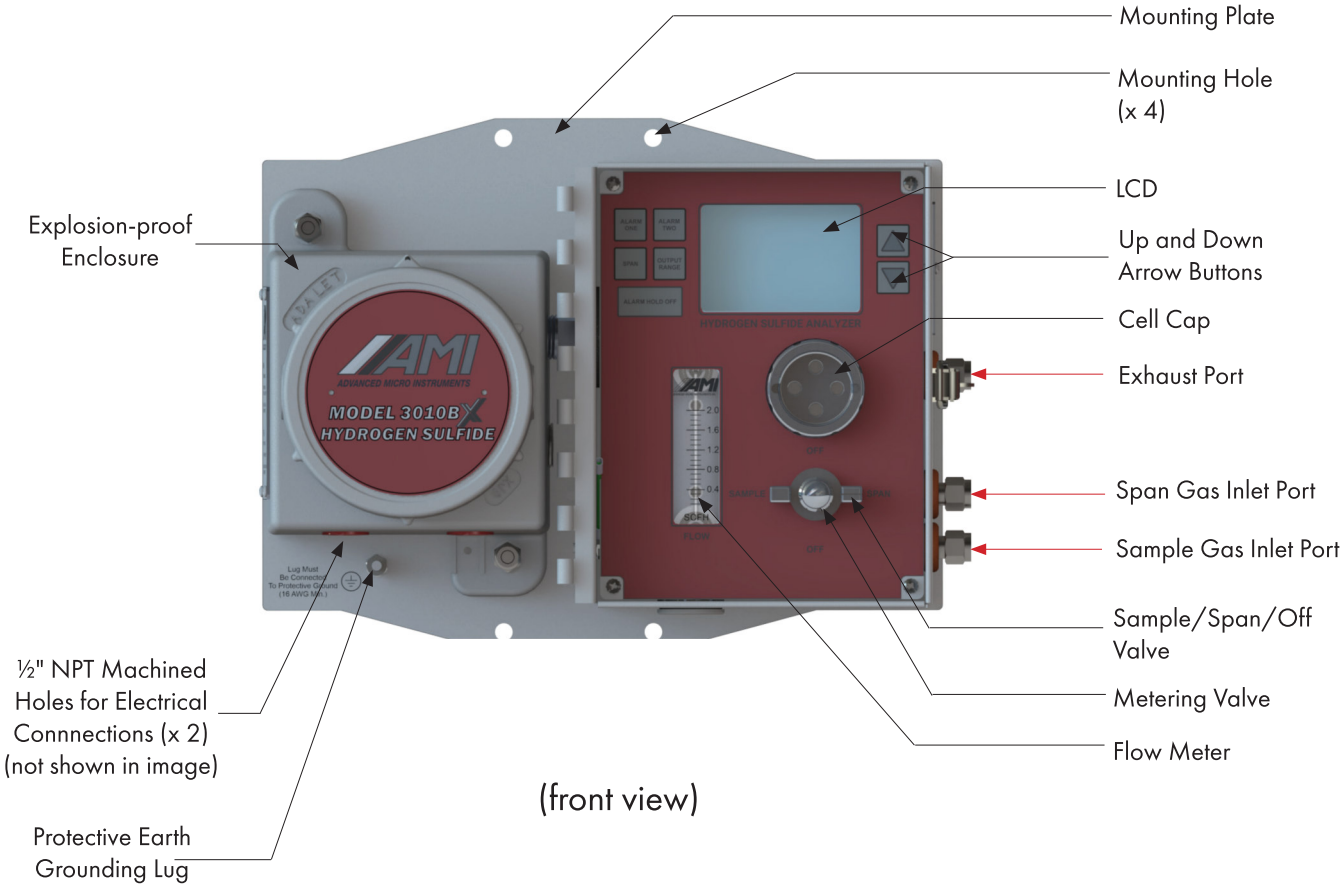

(front view)

(right side view)

(left side view)

⚠ CAUTION

Gas may be hazardous.

Exhaust Port

Span Gas Inlet Port

Sample Gas Inlet Port

Case Earth Ground Lug (Note: No Customer Connections)

Warning/Caution Information Plate

METHOD OF MEASUREMENT:
ELECTROCHEMICAL HYDROGEN SULFIDE SENSORS

The **MODEL 3010BX** utilizes an electrochemical sensor with a strong sensitivity to trace levels of hydrogen sulfide. AMI offers customers two sensor options, based on the needs of their applications. One option can measure trace hydrogen sulfide levels to as high as 200 ppm, while the other option increases the measurement range to 2000 ppm.

Hydrogen Sulfide Sensor	Range(s)
Low Range	0 –10 ppm, 0 –50 ppm, 0 –100 ppm, 0 –200 ppm
High Range	0 –100 ppm, 0 –500 ppm, 0 –1000 ppm, 0 –2000 ppm,

While our sensors have a strong sensitivity to trace levels of H_2S, they also have a cross-sensitivity to other gases.

The following table provides the effect on the H_2S measurement shown on the Analyzer due to cross-sensitivity of the listed gases, if the gas is present at a level of 100 ppm.

Common Gases	Reading
Methyl Mercaptan	40 ppm
Hydrogen	1 ppm
Carbon monoxide	4 ppm

Uncommon Gases	Reading
Nitric Oxide	2 ppm
Sulfur dioxide	18 ppm
Ethylene	< 0.8 ppm
Ammonia or amines	< 0.1 ppm
Carbonyl sulfide	< 0.1 ppm
Carbon disulfide	< 0.1 ppm
Chlorine	-25 ppm
Nitrogen dioxide	-30 ppm

Example: If the sample gas contains 20 ppm of H_2S and also contains 100 ppm of hydrogen, the reading for H2S on the Analyzer will be 21 ppm.

KEY INNOVATIONS

Advanced Micro Instruments has developed and patented key technologies that enable our Analyzers to deliver the highest levels of **PERFORMANCE**, **RELIABILITY** and **EASE-OF-USE**. These technologies are utilized by the **MODEL 3010BX** and are not available on any competitive offering.

ELIMINATOR CELL BLOCK™

Our patented ***ELIMINATOR CELL BLOCK™*** provides a unique sample system approach that virtually eliminates all potential leak paths while optimizing flow efficiencies. The sample system and flow-efficient sensor pocket are machined directly into a solid metallic block and interconnected with precision-drilled, intersecting gas passages – eliminating the need to use long lengths of tubing and leak-prone compression fittings. Additionally, a special engineered 3-way selector valve, metering valve, pressure sensor and flow meter are all integrated into the machined block.

This approach is far superior than the designs of traditional sample systems that use multiple off-the-shelf components, numerous compression fittings and long lengths of tubing that join everything together. The traditional, outdated approach requires a great deal of space and is prone to leaks.

The Block even provides the user with direct front panel access for installing and replacing sensors, as well as air calibration feature, without the need for disassembly or tools.

COMMAND CENTER INTERFACE SOFTWARE

This powerful software platform comes standard with every **MODEL 3010BX** purchase and provides users with access to a full suite of advanced features, including:

- Settings & logic adjustments for 2-fully independent Alarm Relay Contacts
- Security settings to prevent unauthorized adjustments to the Analyzer via the front panel
- Changing the analog outputs from 4 –20 mA to 1–5 VDC or vice versa
- Datalogger that records measurement readings, temperature of the Cell Block, gas pressure, brown-outs and power voltage over a period of 15 days @1-min intervals (data can be displayed on a graph or in tabular format)
- Error Status Display that alerts users to any error(s) detected by the Analyzer
- Communication with the Analyzer via USB Virtual COMport and Modbus bi-directional RS485 Communication

SYMBOL TABLE

	WARNING - RISK OF DANGER OR HARM TO THE USER or RISK OF DAMAGE TO THE PRODUCT. Consult the operator manual.		RISK OF SHOCK (DC)
	Relay		RISK OF SHOCK (AC)
	Earth Ground		Protective Ground
	DC (Direct Current)		AC (Alternating Current)
	Frame Chasis Terminal		

SAFETY, WARNINGS & CAUTIONS

A **WARNING** identifies conditions or procedures that can be dangerous to the user.

A **CAUTION** identifies conditions or procedures that can cause damage to the Product.

WARNING

Make sure no hazardous gas is present in the area before and during installation.

Violation of the National Electrical Code requirements (especially Article 500 that deals with hazardous areas) may cause a fire or explosion with the potential for serious injury or loss of life.

WARNING

Drilling any holes in the enclosure will violate the safety approval and may create risk of harm.

WARNING

Due to non-conductive surfaces, there exists a POTENTIAL ELECTROSTATIC CHARGING HAZARD.

EN RAISON DE SURFACES NON CONDUCTRICES, IL EXISTE UN RISQUE POTENTIEL DE CHARGE ELECTROSTATIQUE

WARNING

You must follow the National Electrical Code (NEC) in your installation. Consult the NEC Handbook for the correct guidelines and standards.

Class I, Div 1 areas must use rigid conduit with seal-offs.

Class I, Div. 2 areas can use flexible conduit with seal-offs.

The Analyzer has approval for Class I, Division 1, Groups C and D. To comply with these requirements you need to assure the following:

- The Protective Earth Ground Lug on the front lower left of the Analyzer mounting bracket must be connected to the High Quality Protective Earth Ground using a16-gauge wire. Please refer to the image on page 2 of the front view of the Analyzer for the location of the Protective Earth Ground Lug

WARNING

The following power requirements must be met by the installer of the DC/AC power connections to the Analyzer:

- You must include an electrical disconnect means and a current limiting device, such as a switch and fuse. The disconnect device must be marked as a 'disconnect device' and readily accessible to shut off power to the Analyzer. This will allow the Analyzer to be quickly shut-off in case of an emergency. The disconnect and current limiting device must be housed in an enclosure rated for the area classification. Conduit seals may be required on the enclosure, depending on the area classification.

DC-powered version (non-heated)
Use a 0.25-Amp fuse disconnect.

DC-powered version with heater option
Use a 2.5-Amp fuse disconnect.
DC power supply must be an approved Class 2 or limited energy circuit for DC power as stated.

AC-powered version (non-heated)
Use a 0.20-Amp fuse disconnect.

AC-powered version with heater option
Use a 1-Amp fuse disconnect.

The voltage rating for the AC Analyzer is 100 to 240VAC at 50/60Hz ± 10%.

AC voltages outside this may cause the Analyzer to malfunction.

WARNING

Enclosure materials contain a light metal content of over 10% Aluminum and pose a potential impact spark ignition hazard. The end user shall carry out a risk assessment prior to installation in an EPL Ga environment and shall only install the equipment where the risk of impact has been considered to be negligible.

Les matériaux de boîtier contiennent une teneur en métaux légers de plus de 10% d'aluminium et constituent un risque potentiel d'inflammation. L'utilisateur final doit procéder à une évaluation des risques avant de l'installer dans un environnement EPL Ga et ne doit installer le matériel que dans les cas où le risque d'impact a été considéré comme négligeable.

WARNING

A SEAL SHALL BE INSTALLED WITHIN 50 mm OF THE ENCLOSURE.

UN SCELLEMENT DOIT ETRE INSTALLE A MOINS DE 50 mm DU BOITIER.

WARNING

SUBSTITUTION OF COMPONENTS MAY IMPAIR INTRINSIC SAFETY.

LE REMPLACEMENT DE COMPOSANTS PEUT COMPROMETTRE LA SECURITE INTRINSEQUE.

CAUTION

The voltage rating of the DC Analyzer is 10–24V.

- DC input has to be an approved Class 2 or limited energy circuit for DC power
- Voltages outside this range may cause the Analyzer to malfunction.

The voltage rating of the AC Analyzer is 100 to 240VAC at 50/60Hz with a tolerance of +/- 10%.

- Any AC voltages outside this range may cause the Analyzer to malfunction

Any use of this equipment in a manner not specified in this manual or approved AMI documentation may impair the protection provided by the equipment.

Toute utilisation de cet équipement d'une manière non spécifiée dans ce manuel ou dans la documentation AMI approuvée peut altérer la protection fournie par l'équipement.

ANALYZER INSTALLATION

Part I: Mounting the Analyzer

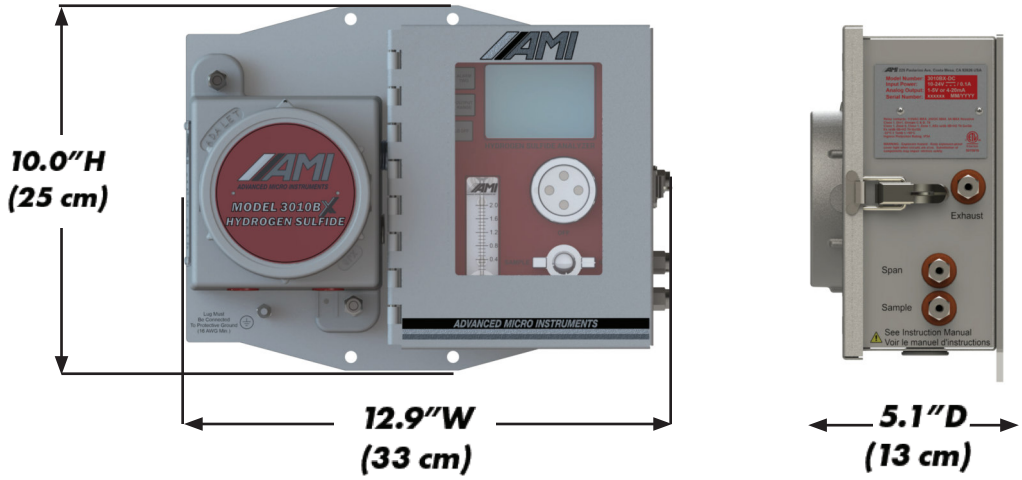

note: Analyzer weighs 16.0 lbs (7.26 kg)

Key Points

- The Analyzer can be mounted either indoors or outdoors, where the ambient temperature remains between 25°F (-3.9°C) and 115°F (46°C)
- For installation, where temperature drops down to -20°F (-29°C), order a **MODEL 3010BX with the factory-installed heater option**
- For installation, where temperature drops down to -40°F (-40°C), order a **MODEL 3010BX with the factory-installed EXTREME WEATHER ENCLOSURE and heater option**
- When using a solar panel to power the Analyzer, we recommend mounting the solar panel just above the Analyzer, using the same mast, to serve as a sunshield

WARNING:
For DC models, do not use above 5,500 m (18,000 ft).

For AC models, do not use above 2,500 m (8,200 ft).

WARNING:
The Analyzer weighs 16.0 lbs (7.26 kg) and can pose a risk to the user if dropped.

STEPS

1. Determine a convenient location to place the Analyzer. The location should ideally be eye-level.

2. Mount the Analyzer to a wall or bulkhead using the 4 mounting holes or to a 2-inch (5 cm) pipe using¼" x 2" U-brackets with ¼ nuts.

Note: Equipment shall only be installed and operated in the upright orientation with the mounting plate vertical.

Part II: Electrical Connections for the Analyzer

Key Points:

- Verify your rated power supply matches the operating voltage of your Analyzer before you begin

- **THE MODEL 3010BX** is available with either AC or DC Power (you must request your desired power at the time of your purchase)

  Note: Refer to page 48 for the power requirements of your Analyzer.

  Note: Both alarm relays are rated for 5A @115VAC or 24VDC.

- Your Analyzer has both 1–5 VDC and 4–20mA isolated analog signals. It has been setup at the factory per your analog output requirements at the time of purchase. However, this can be easily changed in the field by following the instructions shown on page 31

- Flameproof joints are not intended to be repaired

- Electrical bushing separating the Flameproof and Analytical enclosures shall not be subject to environmental conditions which adversely affect the properties of the cement

STEPS

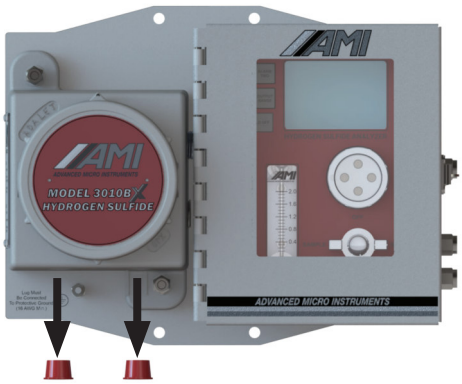

1. Remove the two red plastic protective caps from the ½" NPT conduit holes on the explosion-proof side of the Analyzer. These plastic caps protect the threads of the unit during shipping.

- We provide 2 (two) separate ½" NPT conduit holes to accommodate all electrical connections. The first conduit opening should be used for power and alarm relay connections. The second is for analog output and RS485 connections

  Note: AC Power and the opening and closing of alarm relays produce both electrical noise and large inductive spikes that can have an undesirable effect on the measurement readings. This is why we provide two conduit openings and strongly recommend separating the sensitive analog signal wiring from the power and relay wiring.

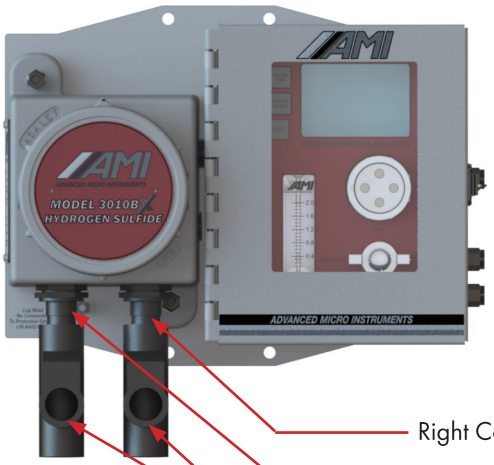

Right Conduit Union

Left Conduit Union

Electrical Seal-offs

2. Install the conduit unions between the explosion-proof housing of the Analyzer and the electrical seal-off. DO NOT fill the electrical seal-offs yet.

- In order to meet electrical codes for Class 1, Div 1 and Class 1, Div 2, Groups C & D, you must use electrical seal-offs in your installation

- We recommend that you install conduit unions between the explosion-proof housing of the Analyzer and the seal-offs. This will prove very useful in the event that you have to remove the Analyzer for servicing, without cutting wires

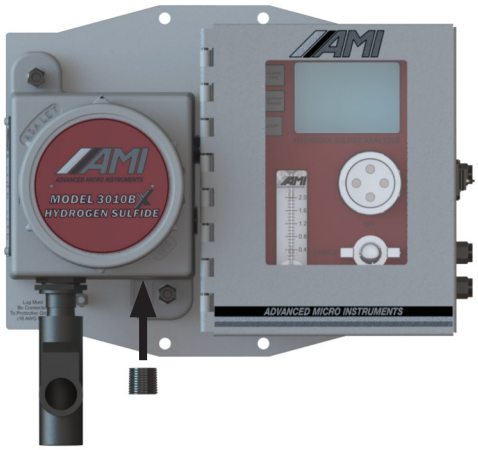

WARNING:

If you are using DC Power and intend on using the analog output only feature (which is the same as using 'NO RELAYS'), you can safely run both DC Power and Analog Output Signal in a single conduit. However, you must install an approved ½" NPT plug for hazardous locations in the unused ½" NPT port.

FAILURE TO DO SO WILL VIOLATE ALL SAFETY REQUIREMENTS AND POTENTIALLY RESULT IN AN EXPLOSION!

DC Version with Terminal Cover
and white information panel

AC Version with Terminal Cover
and black information panel

3. Remove the explosion-proof cover by rotating it counterclockwise.

   Note: A white sheet metal panel inside the explosion-proof housing indicates DC, while a black sheet metal panel indicates AC power.

4. Then remove the Terminal Cover to access the electrical connections.

5. Verify the operating voltage of your Analyzer and the correct power requirements before you continue.

6. Make sure the power source has been turned-off before you begin installing wiring.

- The green terminal block connectors are combination connectors, which allows you to unplug the connector during the wiring process. Combination connectors can accommodate between 12–24 AWG wire for your electrical connection

IMPORTANT: When attaching wiring to the green terminal connectors, use either solid wire or stranded wire with wire ferrule(s) attached. Verify no loose strands are visible after installation of wire ferrule(s).

1st CONDUIT (POWER & ALARMS):

For DC Power:

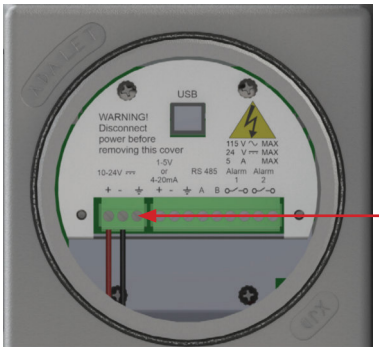

Shield Earth Ground Terminal Connection

7. Connect the DC power wires to the appropriate terminals on the left.

   - The + positive and - negative are clearly marked on the sheet metal cover
   - If you decide to use a 2-wire cable with shield for the power supply connection, AMI provides quality Shield Earth Ground Terminal Connection next to the + positive and - negative terminals

For AC Power:

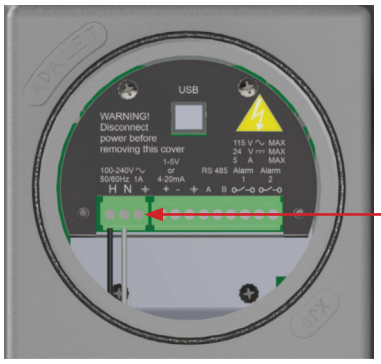

AC Power Ground Terminal Connection (A)

(see recommendation below)

7. Connect the AC power wires to the appropriate terminals on the left. The wire designations are clearly marked on the black metal cover.

   - H is for the Hot Wire
   - N is for the Neutral Wire
   - Position (A), as shown above, is for the AC Power Ground

Protective Earth Ground Lug

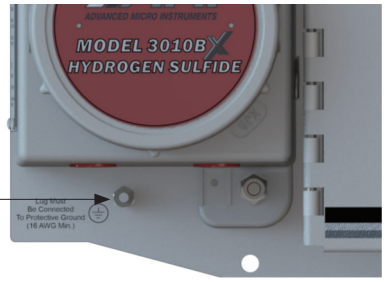

WARNING:
Analyzer must be connected to a Quality Protective Earth Ground for safety and the highest level of RFI protection. This is accomplished by connecting an 16-gauge wire from the Analyzer's Protective Earth Grounding Lug to an 8 foot ground rod or equivalent quality ground. (The Protective Earth Ground Lug is located just below the explosion-proof housing as seen in the image above)

WARNING:
When using a AC power, never rely on the AC Power Ground as a source for Analyzer safety or ground protection. Always connect the Protective Earth Ground Lug, shown above, to a high quality ground, such as an 8 foot ground rod or equivalent.

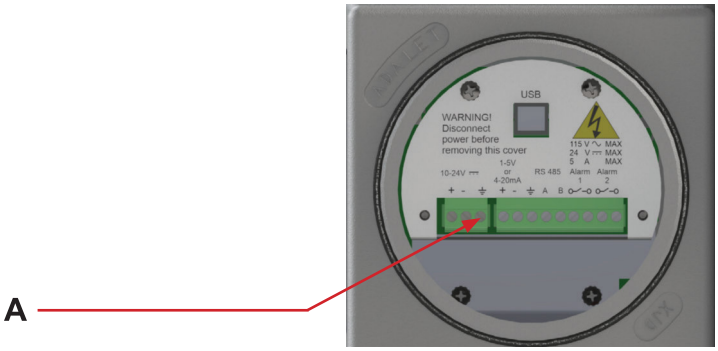

RECOMMENDED: WHEN USING DC POWER, USE A SHIELDED-TWISTED PAIR CABLE AND CONNECT THE CABLE SHIELD TO THE SHIELD EARTH GROUND TERMINAL SHOWN IN POSITION 'A' OF THE ILLUSTRATION BELOW. DO NOT CONNECT THE OTHER END OF THE SHIELD WIRE AS IT WILL CAUSE UNDESIRABLE GROUND LOOPS!

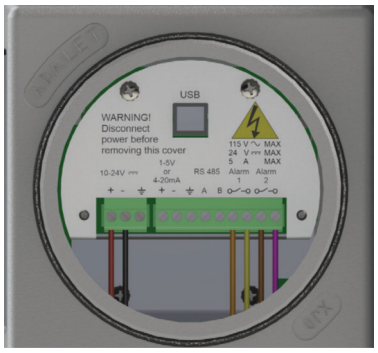

(DC Power Version is shown for alarm wiring. The AC version will be identical for alarms, analog output and RS-485 connections.)

8. Connect the wires for the two fully adjustable alarm contact relays to their proper terminals.

   Note: Both alarm relays are rated for 5A @115VAC or 24VDC.

IMPORTANT: IF YOU DESIRE TO USE THE ALARM CONTACT RELAYS, THE ALARM WIRES MUST BE PULLED THROUGH THE SAME CONDUIT AS THE SUPPLY POWER.

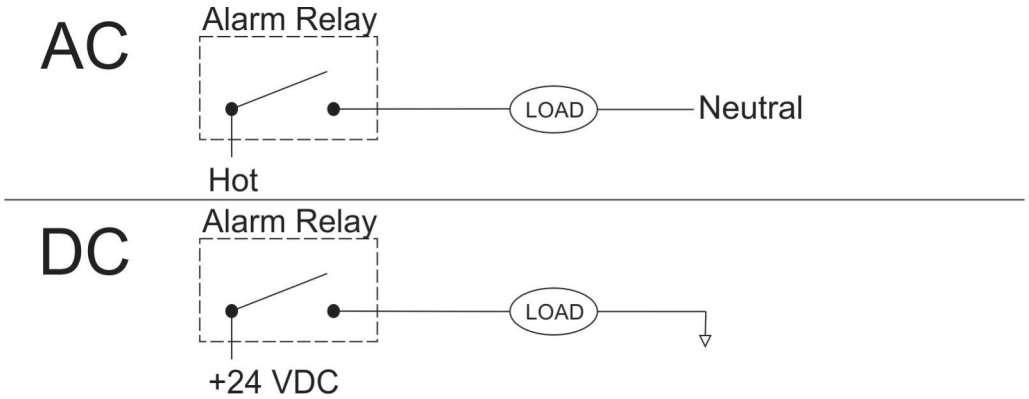

IMPORTANT: The relay contacts act like a simple switch breaking only a single leg of the circuit. In keeping with good electrical practices while wiring the alarm contacts, We suggest **SWITCH/BREAK THE HOT LEG only, NOT THE GROUND LEG OF YOUR CIRCUIT**.

2nd CONDUIT (ANALOG OUTPUTS & RS485 COMMUNICATION):

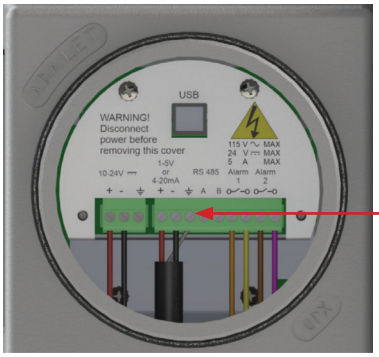

(DC Power Version is shown. Instructions are the same for the AC Power Version)

Analog Output should be connected using a twisted 2-conductor wire with shield

NOTE: Always use a twisted 2-conductor cable with shield. **Never connect both ends of the shield to both devices (Analyzer and other device) as it will cause ground loops**. Connect the analog output shield to the shield earth ground shown above.

(DC Power Version is shown. Instructions are the same for the AC Power Version)

9. Last, connect the wires for RS485 communication to their proper terminals.

10. Verify all electrical connections and then turn on the source of power. The Analyzer will power-up and the LCD will blink for a few seconds during power-up. You may see some LEDs blinking within the explosion-proof housing and NEMA 4X box as this is normal during operation.

11. Once you have tested all electrical functions, pour approved potting compound into the electrical seal-offs.

INITIATION OF THE PRESSURE SENSOR

IMPORTANT: YOU MUST CALIBRATE THE PRESSURE SENSOR READING TO 0.0 PRIOR TO ANY GAS CONNECTIONS. THIS WILL CORRECT FOR ELEVATION VARIATIONS.

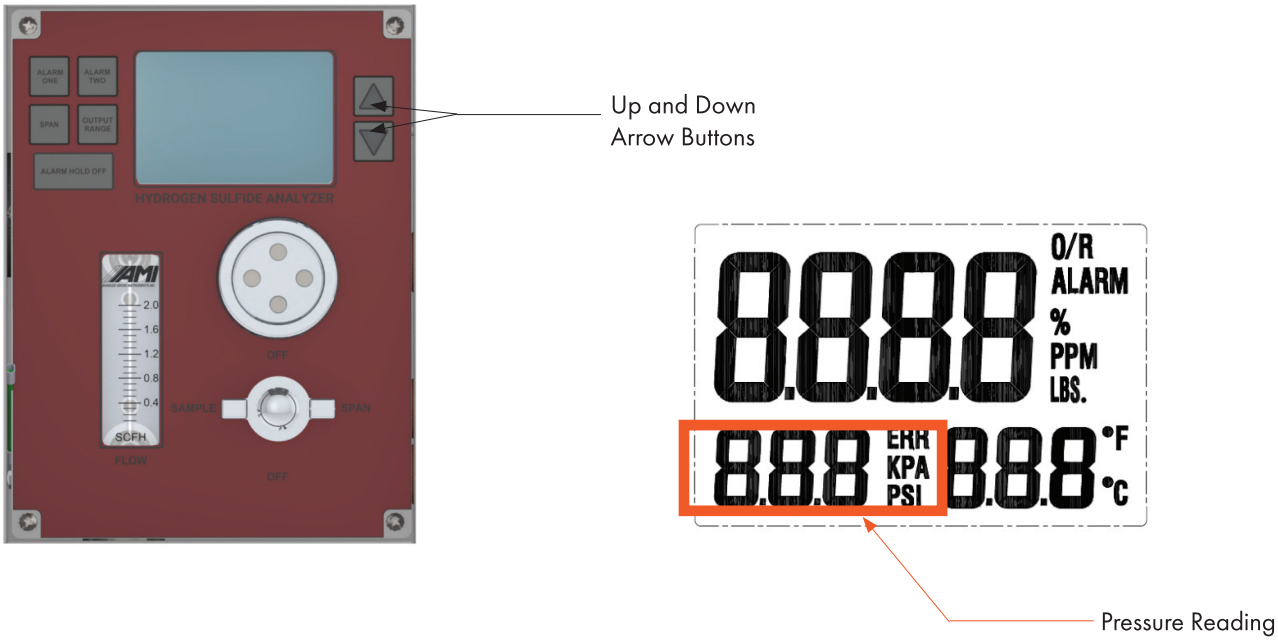

12. Press and hold the DOWN ARROW BUTTON until the 'PSI' indication on the LCD begins to blink (this will take a few seconds).

13. Then press the UP and DOWN ARROW BUTTONS until the pressure reading goes to a value of '**0.0 PSI**'.

14. The LCD will revert back to operation mode in ~ 3 seconds when no buttons are pressed.

Part III: Gas Connections

Key Points:

- Sample Gas Inlet Pressure: You must have a minimum pressure of 0.5 psig for gas to flow through the Analyzer.

WARNING
The maximum allowable inlet pressure for safe operation is 150 psig. Sites, where gas pressure exceeds 150 psig, require a pressure reducing regulator installed between the pipeline tap and Analyzer.

CAUTION
When the sample gas is hot and wet, it could cause water to condense in the Sample Line or Analyzer

- For best operation, we recommend installing an AMI **Demister** and **LRP**, which can be purchased separately

Demister

LRP

— The vertically-mounted Demister is designed to quickly and effectively reduce sample pipeline gas temperatures to ambient. The Demister rapidly cools warm, saturated gas, causing the liquids to condense out and drain back into the pipeline without requiring maintenance of other solutions, such as drip pots and coalescing filters

— The LRP mounts directly on top of the Demister. It houses a unique membrane and stainless steel diaphragm that allows gas to flow through while rejecting liquids, such as water, glycols and compressor oils, etc. This prevents liquid slugs from pipeline gas from reaching the Analyzer, resulting in costly repairs

— The LRP also contains a unique one-way check valve feature that prevents air from being drawn through the exhaust port of an Analyzer and into the pipeline in the event of a loss of pipeline pressure

- All gas connections will require using the supplied ferrule set, ¼" stainless steel compression fittings and tubing

STEPS

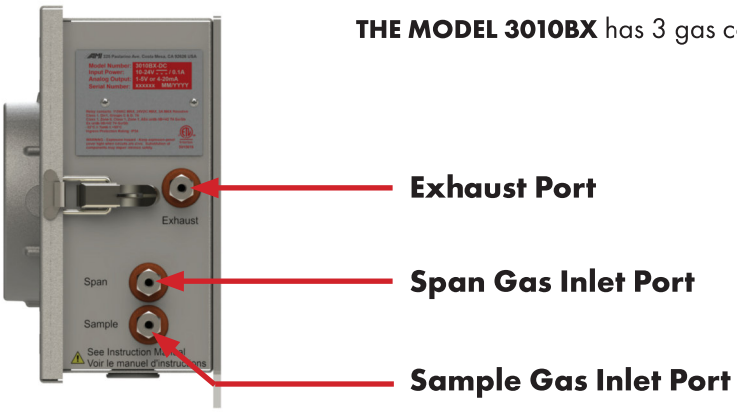

THE MODEL 3010BX has 3 gas connections on its right side.

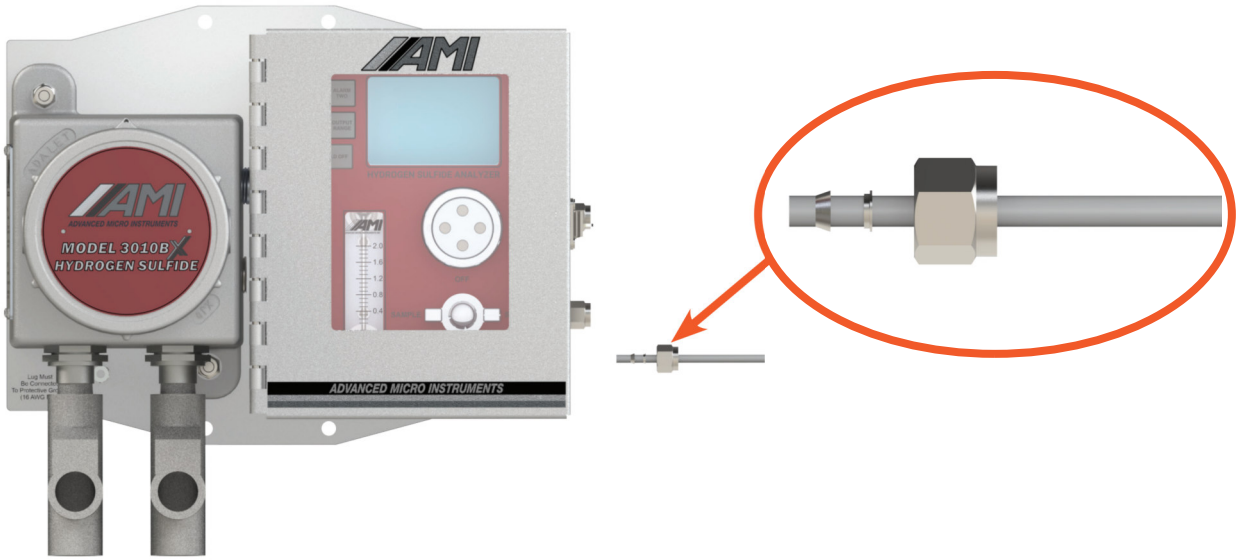

1. Take a deburred length of ¼" stainless steel tubing and slip it through the supplied compression nut and ferrule set. Confirm that the ferrule properly orientated at one end, and connect it to the SAMPLE GAS INLET PORT.

   Make sure the ¼" stainless steel tubing slips all the way into the compression fitting until it bottoms out. Tighten the compression nut with 1 & ¼ turns.

2. Connect the other end to the pipeline gas tab, pressure reducing regulator or an AMI LRP with Demister.

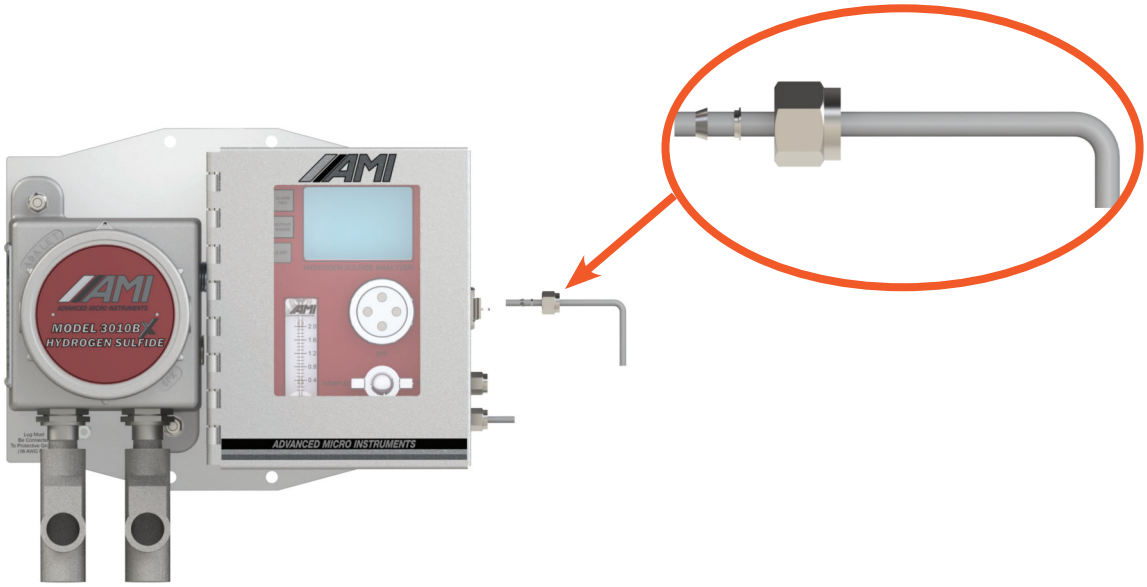

3. Take another deburred length of ¼" stainless steel tubing and slip it through the supplied compression nut and ferrule set. Confirm that the ferrule set is properly oriented and then connect to the EXHAUST PORT.

   Make sure the ¼ stainless steel tubing slips all the way into the compression fitting until it bottoms out. Tighten the compression nut with 1 & ¼ turns.

4. Run the other open end of the ¼" stainless steel tubing to a safe vented area outside of the meter building.

CAUTION

The EXHAUST LINE must run slightly downhill the entire way to a safe area to allow any condensate to drain outside and not back into the Analyzer. If you must run the EXHAUST LINE vertically through the ceiling, install a 'knock-out' pot to capture the liquid condensate just prior to going vertical. This will prevent condensate from running back into the Analyzer.

INITIATION OF SAMPLE FLOW TO THE ANALYZER

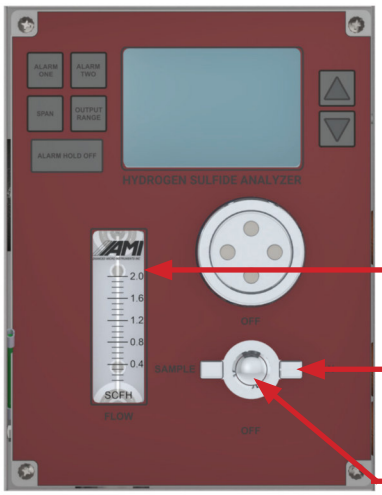

CAUTION:
DO NOT OVERTIGHTEN THE METERING VALVES or you will damage them. They are not ON/OFF VALVES!

Flow Meter
The flow meter indicates the flow rate of either the sample or span gas through the Analyzer.

3-way Selector Valve
This valve selects what gas flows past the sensor. You can rotate this valve clockwise or counter-clockwise. In the SAMPLE position, sample gas will flow past the sensor. In the SPAN position, span gas from the connected cylinder will enter through the SPAN GAS INLET PORT and flow past the sensor (note: this port is provided for periodic calibrations). In the OFF position, both SAMPLE GAS INLET PORT and SPAN GAS INLET PORT are blocked, which prevents any gas flow.

Metering Valve
This valve is located at the center of the 3-WAY SELECTOR VALVE and used for adjusting both sample and span gas flow rates. Turning the knob clockwise decreases the flow, while rotating it counter-clockwise increases the flowrate.

STEPS

1. Leak check the newly installed sample gas line. Rotate the 3-WAY SELECTOR VALVE to the OFF position. Then pressurize the sample line to ~ 20 to 100 psig. Use a squeeze bottle of SNOOP® or equivalent product and leak check every fitting from the SAMPLE GAS INLET PORT back to the sample tap (note: bubble formations indicate a leak). DO NOT USE the spray bottle as this technique produces bubbles and does not achieve the best results.

2. Rotate the 3-WAY SELECTOR VALVE to the SAMPLE position. Then, slowly adjust the METERING VALVE until the FLOW METER reads ~ 1.0 SCFH.
3. Allow the sample gas to purge the tubing and Analyzer.

END OF INSTALLATION

SENSOR INSTALLATION

Note: The Analyzer is shipped with an H_2S sensor already installed.

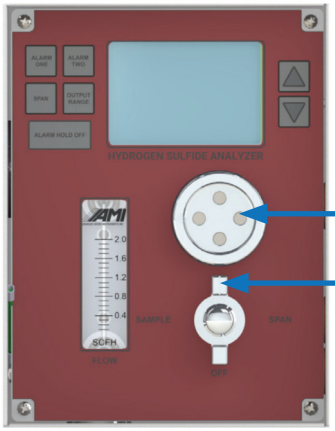

Cell Cap (The H_2S sensor is located behind the Cell Cap)

3-way Selector Valve in the OFF Position

SENSOR REPLACEMENT

1. Turn the 3-WAY SELECTOR Valve to the OFF position.

2. Remove the CELL CAP by turning it counterclockwise.

3. Remove the expired sensor.

4. Open the bag containing the new hydrogen sulfide sensor.

5. Orientate the new hydrogen sulfide sensor into the sensor pocket as shown in the image above.

6. Turn the 3-WAY SELECTOR VALVE to the SPAN position. Allow the measurement reading to stabilize for 20 minutes.

7. Press the SPAN Button and release. The word SPAN will appear on the LCD for 1 second and then display the H_2S reading, while the PPM FLAG blinks. Quickly press the appropriate UP/DOWN ARROW to adjust the LCD reading to the value stated on your calibration gas cylinder.

8. Turn the 3-WAY SELECTOR VALVE back to the SAMPLE position.

CALIBRATION

Note: Every **MODEL 3010BX** unit undergoes rigorous internal quality tests prior to shipping. This includes a complete electronics and in-depth gas test.

Calibrate your Analyzer monthly using a calibration gas standard with your desired range of H_2S in a background of nitrogen. We recommend 5–10ppm H_2S in a background of nitrogen for safety for our low range (0–200 ppm) model.

If you are calibrating the high range **MODEL 3010BX** Analyzer (0–2000 ppm) with a Span Gas, we recommend a Span Gas < 200 ppm for safety reasons.

CALIBRATION WITH A SPAN GAS

We encourage you to view our calibration video at www.amio2.com before starting.

REQUIRED COMPONENTS:

- Certified span gas with approximately 5 ppm H_2S in background of nitrogen
- Stainless steel reducing regulator, outfitted with inlet/outlet pressure gauges and CGA 330 connection fitting (note: regulator must have a stainless-steel diaphragm)
- Flexible (non-diffusive) tubing (available for purchase from AMI) or a length of stainless-steel tubing
- Tank wrench

CALIBRATION STEPS

1. Connect the AMI-supplied non-diffusive flexible tubing or stainless steel tubing from the regulator outlet fitting to the Span Inlet Gas Port.
2. Open the valve of the Span Gas Tank and adjust the regulator pressure to approximately 20 psig.
3. Press the ALARM HOLD OFF button if you are utilizing the alarm feature to avoid an alarm condition.
4. Rotate the 3-WAY SELECTOR VALVE, located on the front panel of the Analyzer, to the SPAN position and adjust the flow rate to approximately 1 SCFH.
5. Allow the measurement reading to stabilize for 20 minutes.
6. Span the Analyzer to the value of the H_2S, specified on the Span Gas Tank, by doing the following:

Press the SPAN Button and release. The word SPAN will appear on the LCD for 1 second and then display the H_2S reading, while the PPM FLAG blinks. Quickly press the appropriate UP/DOWN ARROW to adjust the LCD reading to the value stated on your calibration gas cylinder.

7. Once completed, wait for a few seconds. The PPM FLAG will stop blinking, and the Analyzer will accept the new calibration.

8. Turn the 3-WAY SELECTION VALVE back to the SAMPLE position (the H_2S reading will quickly drop to the value of the pipeline gas).

DISPLAYING THE CURRENT SPAN FACTOR

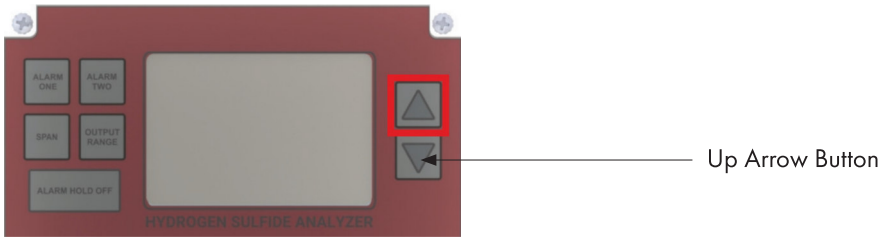

Press the UP ARROW BUTTON.

IMPORTANT:
The SPAN FACTOR is an indication of sensor life. The span factor is accurate only after an accurate callibration has been completed.

The SPAN FACTOR of a new H_2S sensor is in the range of 400 to 600.

Over time, as the H_2S sensor ages, each calibration should require an adjustment with the UP ARROW BUTTON to correct for any degradation of the electrochemical sensor output (note: the degradation is approximately 1% of the reading per month).

When the SPAN FACTOR reaches around 980, it will become necessary to replace the sensor during the next calibration.

If you are calibrating the high range MODEL 3010BX Analyzer (0 – 2000 ppm), we recommend a Span Gas > 200 ppm for safety reasons.

ANALYZER OPERATION

Front Panel Interface

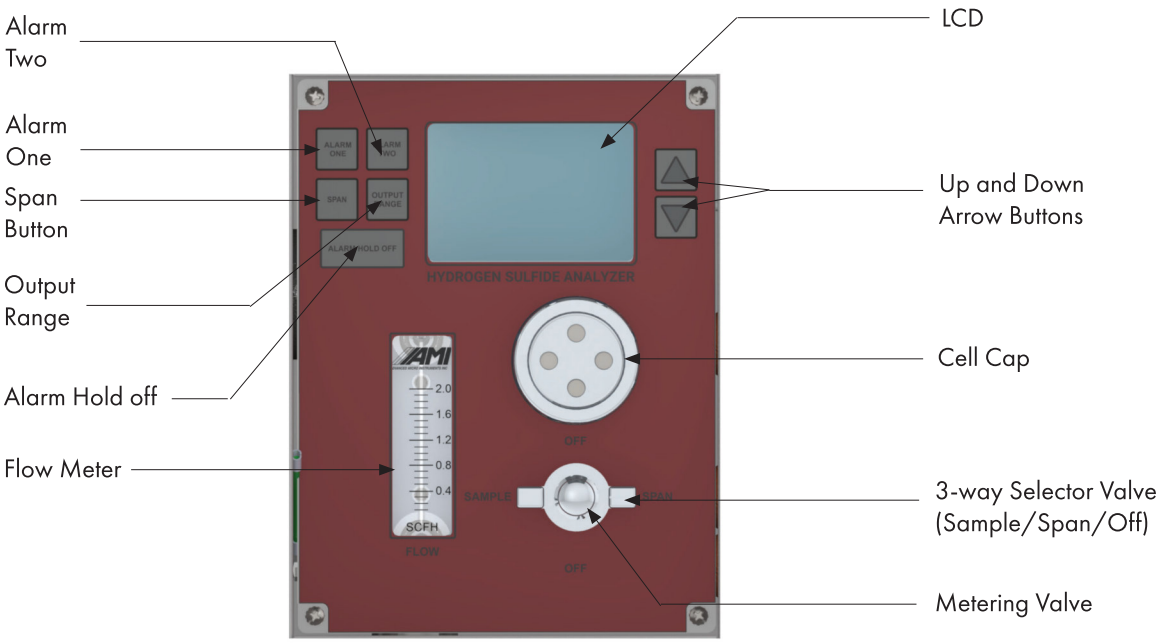

Readings on the LCD

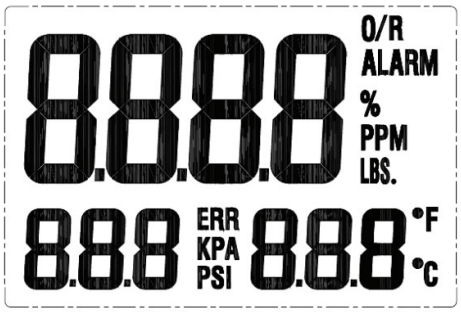

1) H_2S readings are displayed in ppm or %, based on the current reading level.

2) Operating Temperature can be displayed in either Fahrenheit (°F) or Celsius (°C).
Note: Fahrenheit is the factory default unit for temperature. Users can switch to Celsius by changing the settings in the ***COMMAND CENTER*** **User Interface Software**. Refer to the ***COMMAND CENTER*** Operator Manual for the proper instructions.

3) Inlet Gas Pressure is can be displayed in either psi or kPa.
Note: 'psi' is the factory default unit for gas presssure. Users can switch to kPa by changing the settings in the ***COMMAND CENTER*** **User Interface Software**. Refer to the ***COMMAND CENTER*** Operator Manual for the proper instructions.

4) The LCD will display 'ALARM' if either ALARM has been triggered.

5) The LCD will display 'ERR' if any 'fail-safe' error has been detected by the Analyzer.

Changing the Analog Output Range of the measurement readings on the LCD

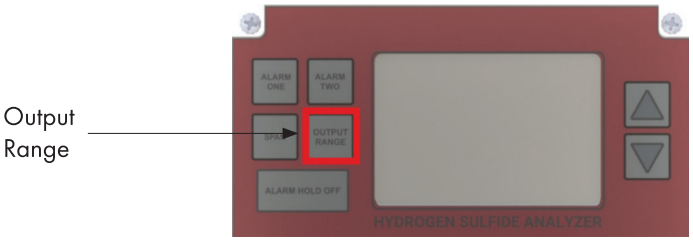

Important:
Your selected Analog Output Range will correlate to the Alarm Range and the Analog Output Range. For example, if the Output Range is set to 0 –10ppm, the Alarm Range is 0 –10ppm. The Analog Output will scale within the selected Analog Output Range and Alarms.

Analog Output Ranges

Standard: 0 –10 ppm, 0 – 50 ppm, 0 – 100 ppm, 0 – 200 ppm
Optional: 0 – 100 ppm, 0 – 500 ppm, 0 –1000 ppm, 0 – 2000 ppm

Press the OUTPUT RANGE button. The LCD screen will display the current Output Range. Within 3 seconds, use the UP AND DOWN ARROW BUTTONS to scroll the choices and select your desired output range. Once completed, do not push any buttons and wait for a couple of seconds. Your new output range will be saved and the Analyzer will revert to measurement mode.

Setting the Alarms on the MODEL 3010BX

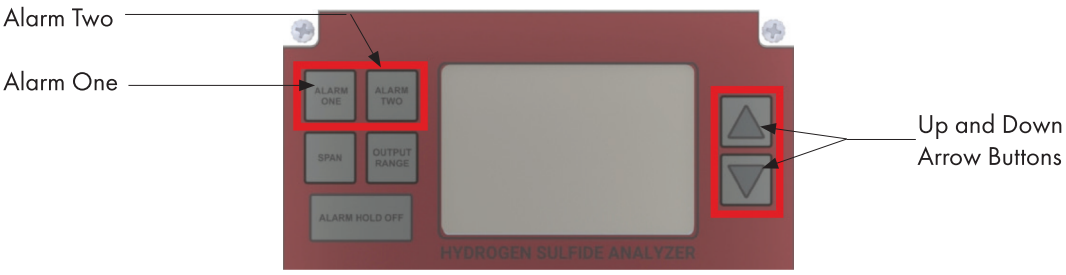

THE MODEL 3010BX comes standard with two fully, adjustable independent alarms (ALARM ONE and ALARM TWO).

To set ALARM ONE, press the ALARM ONE Button and quickly release. The LCD alarm flag will blink, and within 3 seconds, press either the UP or DOWN ARROW BUTTON to adjust your alarm setpoint. Once pressed, just hold the button until you reach your desired alarm setpoint. The longer you hold, the faster the alarm setpoint adjusts. If no buttons are pressed within 3 seconds, the Analyzer will revert to measurement mode.

If you make a mistake at any time, simply let go of the button for 3-4 seconds, and the LCD will return to measurement mode. Then try again.

To set ALARM TWO, repeat the same steps as used in ALARM ONE.

Note: Your alarm setpoint will be fully adjustable within your selected output range.

Setting the Alarm Hold Off

NOTE:
The ALARM HOLD OFF allows you to bypass the Alarm Relay Function for a predetermined amount of time. The feature is helpful to use during monthly or quarterly gas calibrations so as not to set off alarm components driven by the Relay contacts.

Press the ALARM HOLD OFF button, and the Alarm Hold Number will appear in minutes. Within 3-4 seconds, push either the UP or DOWN ARROW BUTTON to adjust the duration of your ALARM HOLD OFF. The ALARM HOLD OFF can be engaged from 0 to 120 minutes. The HOLD OFF feature holds-off both ALARMS and ANALOG OUTPUT.

After the time for setting the ALARM HOLD OFF expires, both Alarms and the Analog Output will revert to measurement mode.

ADDITIONAL NOTES:
If you need more time for the setup, simply push the ALARM HOLD OFF Button again, and it will automatically reset to the original Hold Off Time.

If you are completing a Calibration before the 'Hold Off' Set Time elapses and want the Alarms and Analog Output to become functional immediately, you can simply run the Hold Off Time to zero by pushing the Hold Off Button until the LCD blinks and then pushing the DOWN ARROW BUTTON until the LCD shows zero.

To access the more sophisticated features available on **MODEL 3010BX** requires installing the current version of the ***COMMAND CENTER*** **Software**.

COMMAND CENTER SOFTWARE SET-UP

Step 1: Remove the explosion-proof cover to access the USB Port (Type B) of the Analyzer

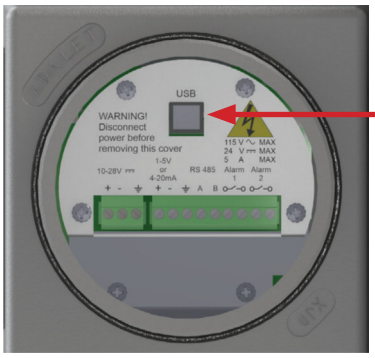

USB Port (Type B)

(DC Power Version is shown. Instructions are the same for the AC Power Version)

Step 2: Establish a Communication Link between your Laptop and the Analyzer

a) Power up your Laptop and open the current version of the ***COMMAND CENTER*** **User Interface Software**.

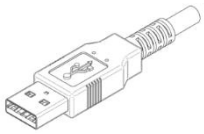

USB Type A Connector

USB Type B Connector

b) Using a USB cable with a Type A Connector on one end and a Type B Connector on the other, insert the Type A Connector into the USB port of your laptop and the Type B Connector into the USB port of the Analyzer on the Explosion-proof side.

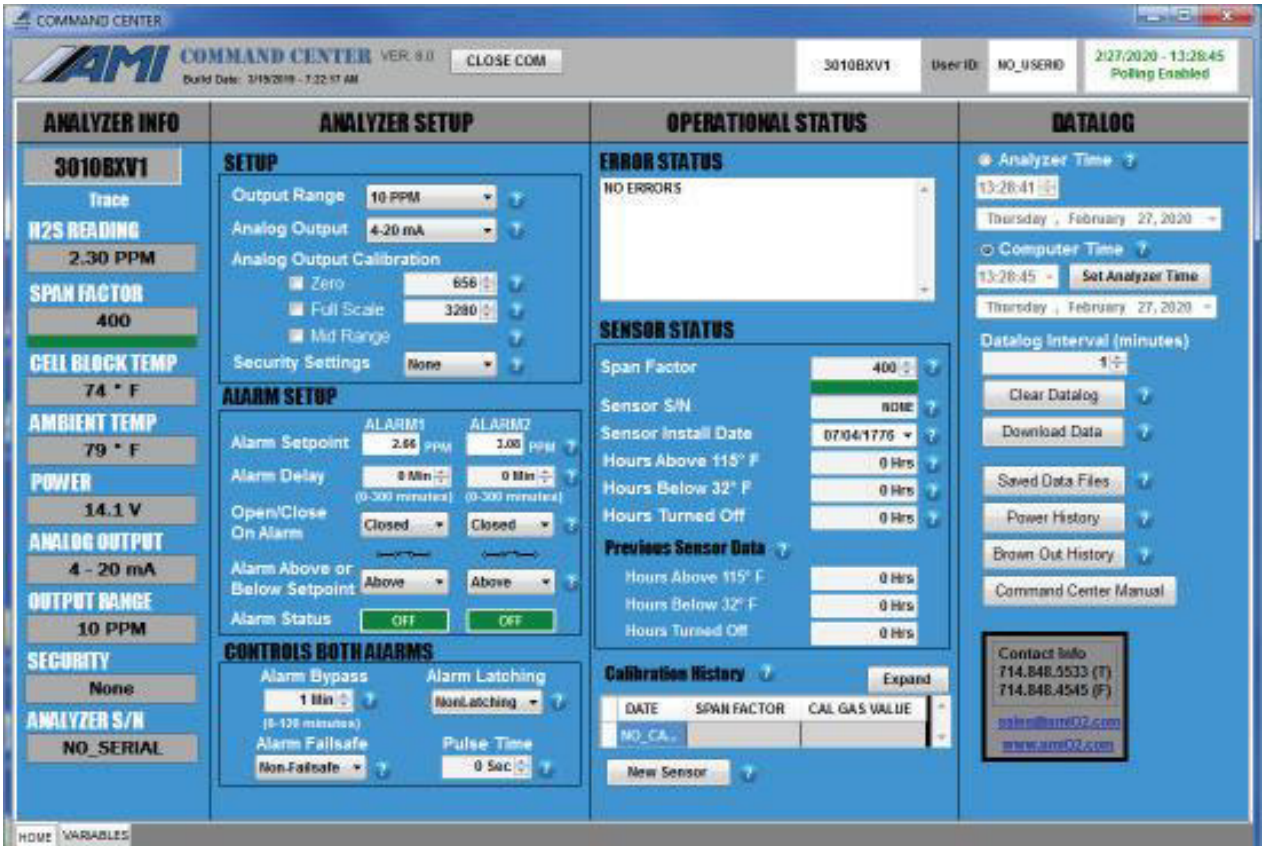

Above: ***COMMAND CENTER* Software** window shown with settings for **MODEL 3010BX**

c) Once the link is established, the software will automatically recognize the Analyzer and populate the Analyzer Info Column with information specific to your Analyzer.

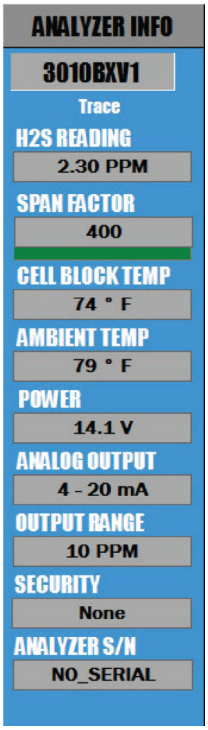

View of the Left Status Column of the User Interface

d) The Analyzer Info Column will display the following information about your Analyzer:

- Analyzer Model Number
- Trace H_2S Reading in ppm
- Span Factor
- Cell Block Temperature
- Ambient Temperature
- Input Power, either AC or DC
- Analog Output Setting (4–20mA or 1–5 VDC)
- Output Range Selection
- Security Selection
- Analyzer Serial Number

Step 3: Selection of Options in Analyzer Setup Area & Syncing with EFM

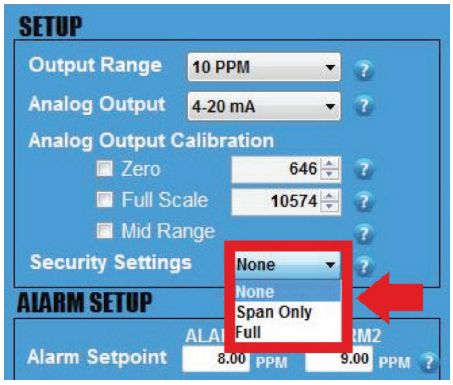

a) Set your desired SECURITY SETTINGS.
You have 3 options available to select from:

–NONE allows anyone to make changes to the Analyzer's settings using the front panel

–SPAN ONLY provides a technician the ability to use the ALARM HOLD-OFF feature and adjust the SPAN value during a gas calibration using the front panel. It will also allow you to push any button for a status but no adjustment. While in this security setting, once any alarm or output range button is pushed, the LCD will flash SSEC as an indication of the security setting and then display status

–FULL **prevents** anyone from changing the Analyzer's settings using the front panel. However, you can still use the front panel to check the Analyzer's status values by pushing any of the buttons
(i.e., pressing the ALARM ONE Button displays the setpoint for ALARM ONE, pressing the ALARM TWO Button displays the setpoint for ALARM TWO, and so on)
While in the full security setting, once any front panel button is pushed, the LCD will flash FSEC as an indication of the security setting and then display status.

Note: To make setting adjustment in the COMMAND CENTER, the 'NONE' Security Setting must be selected.

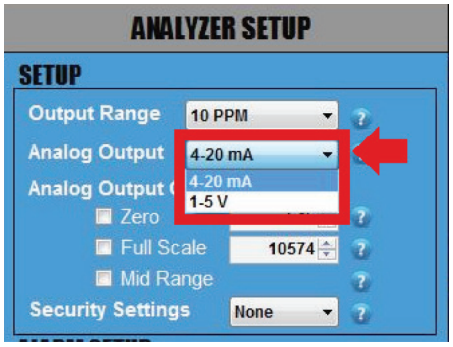

b) View ANALOG OUTPUT Setting.
This is set and calibrated at the factory per your order requirements prior to shipping. If you wish to change the analog output from 4–20mA or 1–5 VDC or vice versa, refer to the instructions shown on page 31.

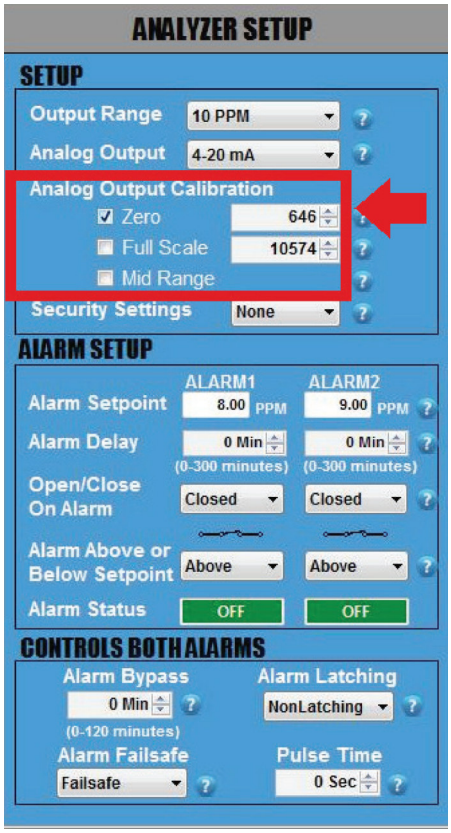

c) Sync your EFM (electronic flow meter) or similar device to your Analyzer.

The following steps are critical because they will ensure that both devices display the same measurement readings and, thereby, prevent unnecessary confusion in the future.

1. By now, you have already wired your EFM or similar device to the Analyzer using the Analyzer's analog output terminals.

2. Click on the small square box next to ZERO and the reading, and this will drive the analog output to exactly 4.00mA or 1.00VDC, depending on your selected output! Confirm that the reading on your EFM or similar device reads 0.00. If it does not, use the UP and DOWN ARROWS to the right of 'Zero' to adjust until the EFM or similar device now reads 0.00.

3. Once this is done, click on the square next to FULL SCALE, and this will drive the analog output to exactly 20.00mA or 5.00VDC, depending on your selected output.

   Confirm that the reading on your EFM or similar device reads full scale. If it does not, use the UP and DOWN ARROWS to right of 'Full Scale' to adjust until the reading of the EFM or similar device reads FULL SCALE.

4. Repeat Step 2 (ZERO) and Step 3 (FULL SCALE) once more to confirm that both your EFM or similar device and the Analyzer are displaying the same readings.

5. Last, click on MID RANGE. This will check the linearity. There are no values to adjust as this is just a midpoint validation.

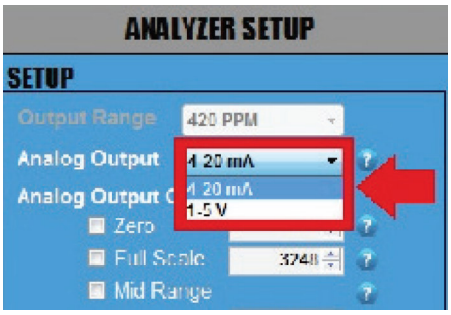

CHANGING ANALOG OUTPUTS (OPTIONAL)

d) Changing your ANALOG OUTPUT from 4–20mA to 1–5 VDC or vice versa. (*Skip this step if you DO NOT want to change your* ANALOG OUTPUT.)

Click on the drop down menu of ANALOG OUTPUT and select the output option that you wish to change to.

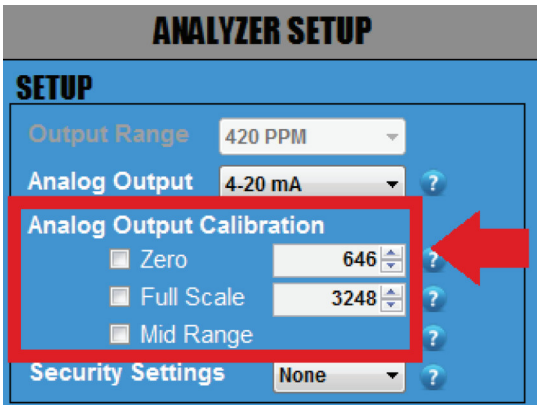

IMPORTANT

Whenever you change the ANALOG OUTPUT from 4–20mA to1–5 VDC or vice versa, you will need to complete the following steps to verify your ANALOG OUTPUT. Remove any analog output wires from the Analyzer connection point!

1. Attach a multimeter to the Green Analog Out Terminal Connector of your Analyzer. Make sure your multimeter is set appropriately, either current for 4–20mA or voltage for 1–5 VDC .

2. Click on the square box next to ZERO to confirm that your multimeter is displaying either 4.00mA or 1.000VDC (the number of digits displayed on the screen will depend on the multimeter that you use). If the reading of the multimeter does not match the reading of the Analyzer, use the UP and DOWN ARROWS to the right of ZERO to adjust the values until the reading of the multimeter is either 4.00mA or 1.000VDC.

3. Once this is completed, click on the square box next to FULL SCALE to confirm that your multimeter is displaying either 20.00mA or 5.00VDC. If the reading of the multimeter does not match the reading of the Analyzer, use the UP and DOWN ARROWS to the right of FULL SCALE to adjust the values until the reading of the multimeter is now either 20.00mA or 5.00VDC .

4.. Repeat Step 2 (ZERO) and Step 3 (FULL SCALE) again until you can confirm that your multimeter is displaying 4.00mA or 1.000VDC for ZERO and 20.00mA or 5VDC for FULL SCALE.

5. Last, click on MID RANGE. This will check the linearity. There are no values to adjust as this is just a midpoint validation.

6. Once you have completed this section, disconnect the multimeter.

Step 4: Alarm Logic & Setup

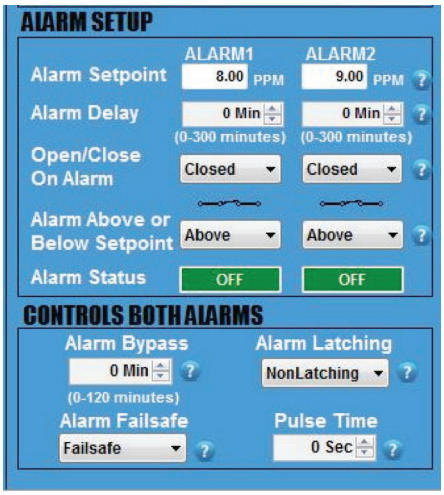

The Analyzer features 2 independent H_2S Concentration Alarms –one for ALARM 1 and one for ALARM 2. The settings for these alarms, including setpoints, relay contacts, close/open logic and alarm delays, are adjusted through the ***COMMAND CENTER***.

It is important that you plan out how you want your ALARM LOGIC to work for each ALARM before you start adjusting the settings discussed in this section.

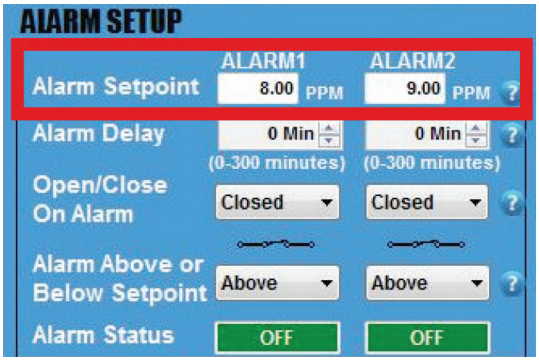

a) Set the ALARM SETPOINTS.
Enter your desired value for each setpoint and then press the ENTER key on your laptop. Keep in mind that your values cannot exceed the limit of the selected analog Output Range that you previously selected.

Both Alarms have a 1% hysteresis band that correlates with the customer selected output range. As the H_2S reading rises to the alarm setpoint, the relay will energize precisely the setpoint. As the H_2S reading drops, it will have to exceed a 1% hysteresis of the alarm setpoint before it de-energizes.

Example: Analog output range has been set for 0–100 ppm with an alarm set for 10 ppm. This relay will energize at exactly 10.0 ppm and de-energize at 9.9 ppm.

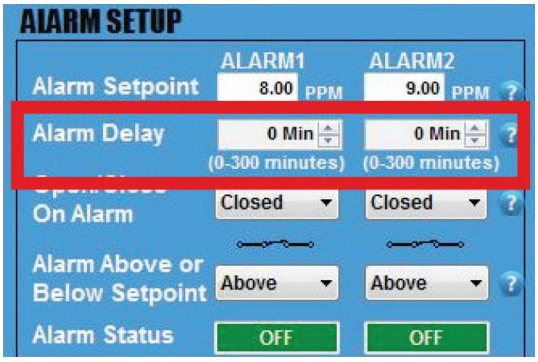

b) Set the ALARM DELAYS.
There are 2 ALARM DELAYS. Each ALARM DELAY setting is located beneath the corresponding ALARM that it controls.

Enter your desired time duration for each ALARM DELAY and press the ENTER key on your laptop. You can also adjust using the UP and DOWN ARROWS. The range is from 0 to 300 minutes.

*This feature is especially helpful at custody transfer points when customers are allowed to exceed contractual limits for a predetermined amount of time.

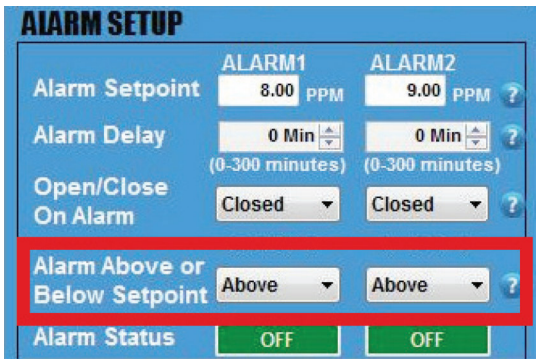

c) Click on the drop-down menu and set the ALARM to trigger ABOVE SETPOINT or BELOW SETPOINT. This causes the alarm flag located on the LCD to illuminate in accordance with your desired setting and the alarm relay contact to open or close as configured in the next step.

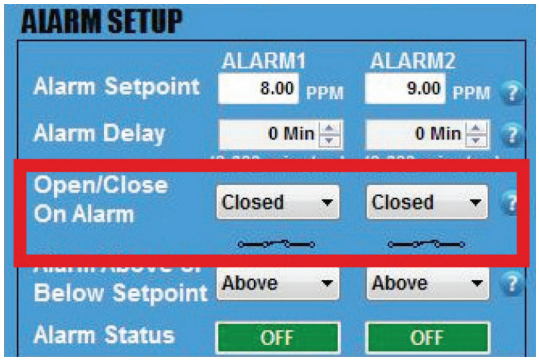

d) Click on the drop-down menu and set the alarm relay contact of each individual ALARM to OPEN or CLOSE when its respective ALARM is triggered.

Each alarm will be triggered above or below setpoint as you have selected in Step c).

The schematic symbol under the drop down menu represents the alarm logic that has been selected. If you select OPEN, the schematic will show an 'open' alarm relay contact. If you select CLOSED, the schematic will show a 'closed' alarm relay contact.

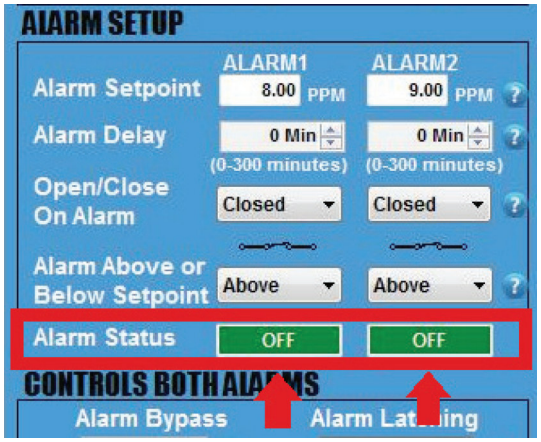

e) View the ALARM STATUS.
Both independent ALARMS have their own ALARM STATUS.

If an ALARM is not triggered, the ALARM STATUS will display 'OFF' in green.

If an ALARM is triggered, its ALARM STATUS will display 'ON' in red.

*For an ALARM to be triggered, it will take into account the complete logic of how the ALARM was set up. This includes SETPOINT, DELAY, OPEN/CLOSE CONTACT ON ALARM, and ALARM ABOVE OR BELOW SETPOINT.

Step 5: Setup of the Controls for Both Alarms

IMPORTANT:
For this section, the adjustments discussed below will affect both ALARMS and **CANNOT** be set independently for each ALARM.

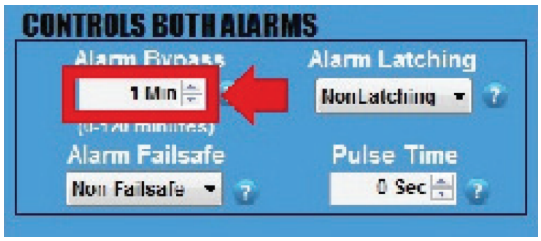

a) Set the ALARM BYPASS. Use the UP and DOWN ARROWS to set the duration of your ALARM BYPASS (HOLDOFF).
*This is a helpful feature during a routine sensor calibration so that you do not set off alarm devices.

*This feature disables both ALARMS and ANALOG OUTPUTS for those of you using the analog output for control..

b) Click on the drop-down menu and set the ALARM relay contacts to LATCHING or NONLATCHING.

-If set to NONLATCHING, the relay contacts will energize when the measurement readings exceeds the ALARM SETPOINTS and then de-energize when the measurement readings drop below the ALARM SETPOINTS.

- If this is set to LATCHING, the relay contacts will energize when the measurement readings exceeds the ALARM SETPOINTS but also remain engaged when the reading drops below the ALARM SETPOINTS. A person will have to press the ALARM HOLDOFF Button for 1 second on the front panel of the Analyzer to disengage the relay contacts.

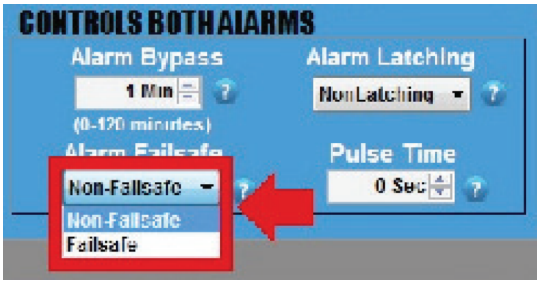

LOW POWER FAILSAFE/NON-FAILSAFE

c) Click on the drop-down menu and set the ALARMS to FAILSAFE or NON FAILSAFE.

- If set to FAILSAFE, the ALARMS will trigger if the power supplied to the Analyzer drops below 8.5V. However, the ALARMS will not clear until the power moves back up and exceeds 12V.

- If set to NONFAILSAFE, the ALARMS will not trigger if the power supplied to the Analyzer drops below 8.5V.

CAUTION: DO NOT adjust this setting unless you are using a pulse-latch slam valve! Otherwise, you will override the relay logic for your Alarms.

d) CHECK WITH THE VALVE MANUFACTURER for the correct pulse time and then set this PULSE TIME (in seconds) using the UP and DOWN Arrows.

This sets the duration of time that the Analyzer sends power to the relay contacts to open or close the valve when an ALARM is triggered. The ALARM 1Contact will open the slam valve, while the ALARM 2 Contact will close the valve.

This features is helpful because it eliminates the need to continually draw power while the valve is closed.

Step 6: Datalog Interval & Setup

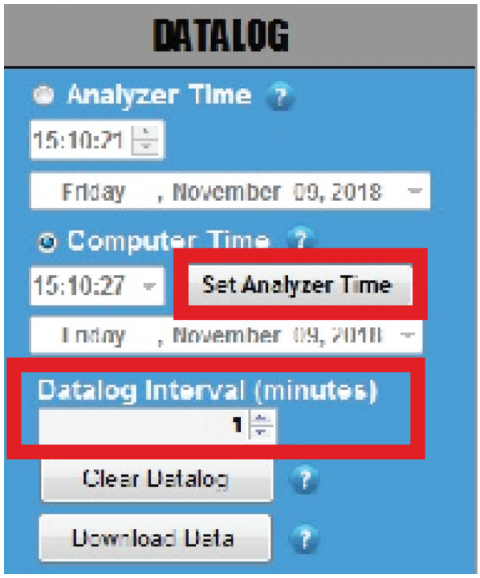

a) SET ANALYZER TIME
Click the Analyzer Time and manually set the time. Or click Computer Time and then the SET ANALYZER TIME Button. The time should automatically adjust and closely match the time shown on your laptop.

b) DATA COLLECTION INTERVAL (minutes)
Then set your desired collection interval for the DATALOGGER by adjusting the time (in minutes). The DATALOGGER allows you to store a time-stamped recording of the measurement reading, inlet gas pressure, temperature of the CELL BLOCK, power supply voltage and minimum voltage supplied to the Analyzer.

Note: The default setting has the DATALOGGER collects data for 15 days in 1-minute intervals. If you increase the duration of the interval, the data collection period also increases proportionally. Therefore, if you increase the interval to 2 minutes, the data collection period adjusts to 30 days. Every 3 minutes will increase the collection period to 45 days and so forth.

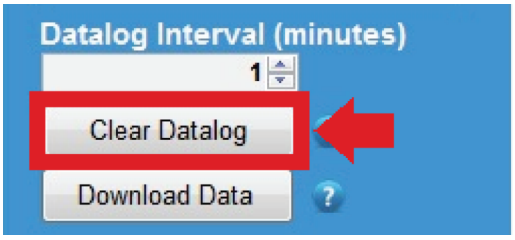

c) CLEAR DATA LOG
Press the CLEAR DATALOG Button to clear any recorded data performed at the factory.

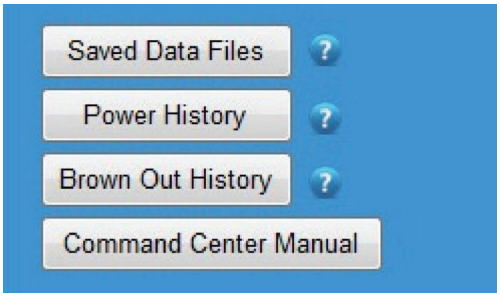

You can also view Saved Data Files, Power History, Brown-out History, and the Manual by pressing their respective buttons in this column.

END OF COMMAND CENTER SETUP

DOWNLOAD DATA

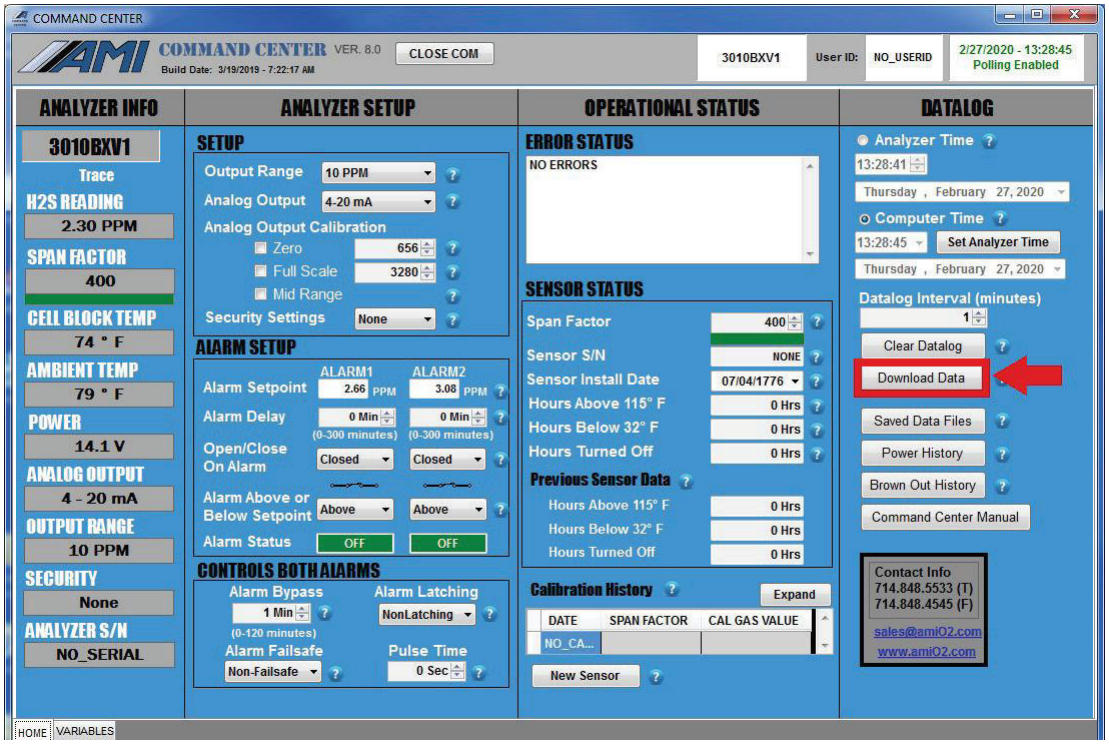

To begin, click the DOWNLOAD DATA Button located on the ***COMMAND CENTER* User Interface.**

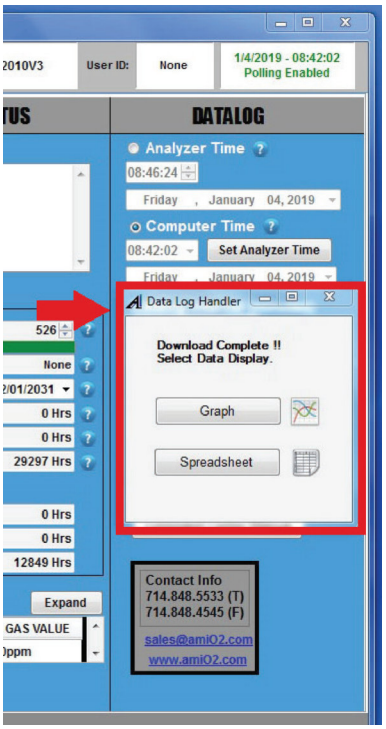

A DATALOG HANDLER window will appear, giving you the options of seeing your downloaded data as either a graph or spreadsheet.

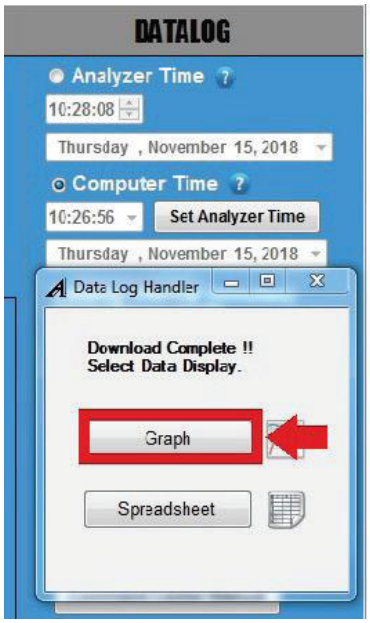

To see the graph, click the GRAPH Button.

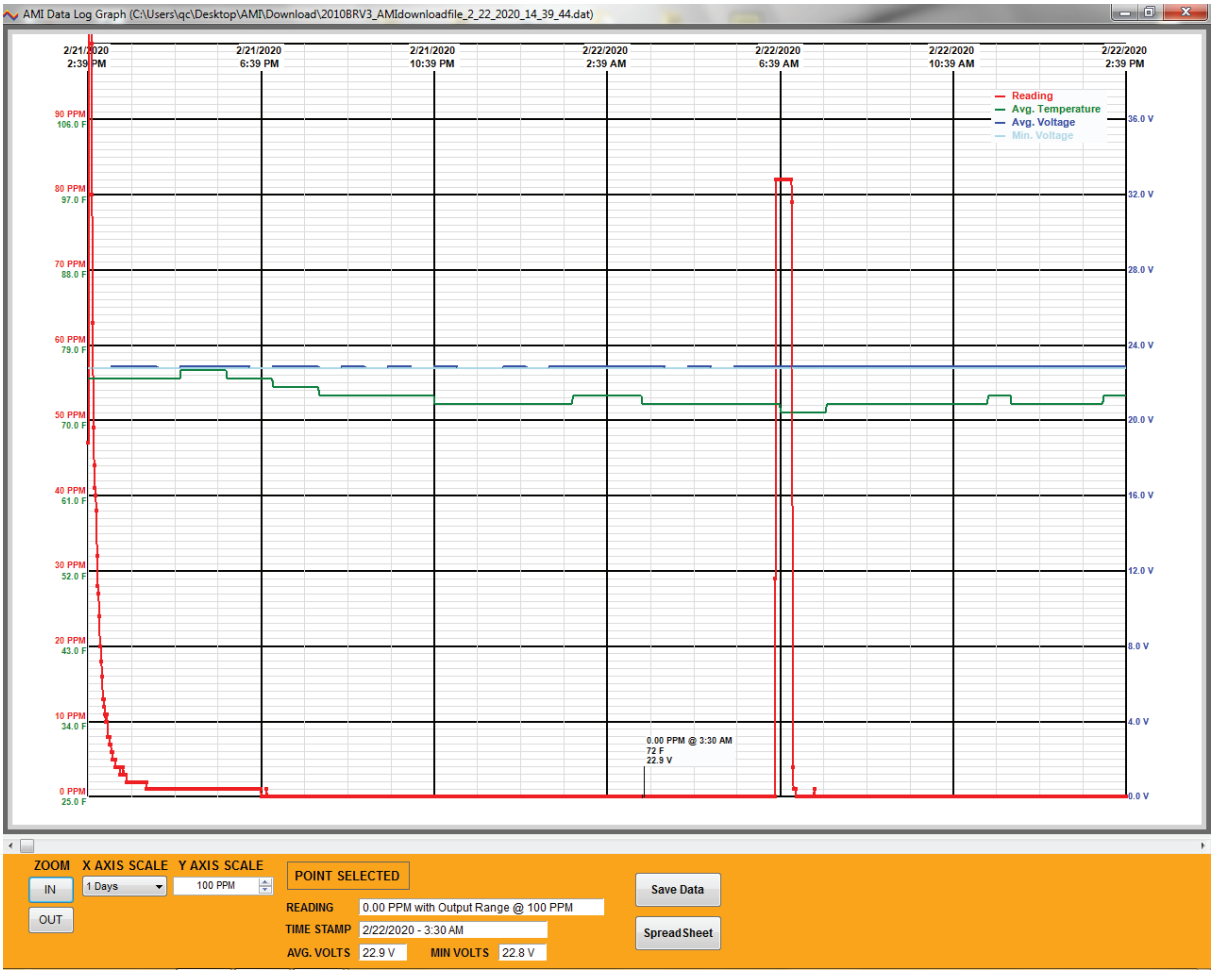

(Sample Graph of Downloaded Data)

You can save your graph to a file by clicking the SAVE DATA Button.

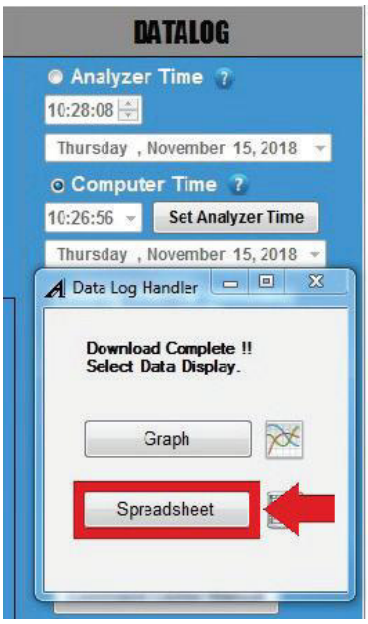

To see your downloaded data as a spreadsheet instead, click the SPREADSHEET Button. on the DATALOG HANDLER Window.

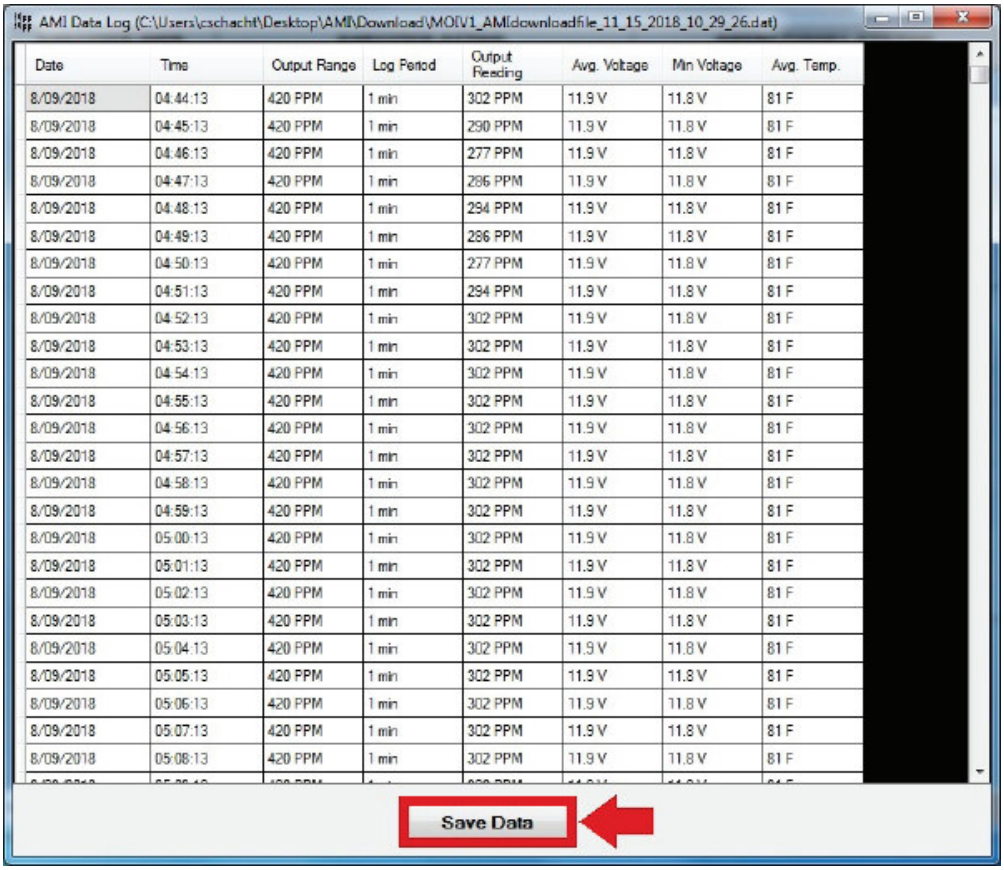

Date	Time	Output Range	Log Period	Output Reading	Avg. Voltage	Min Voltage	Avg. Temp.
8/09/2018	04:44:13	420 PPM	1 min	302 PPM	11.9 V	11.8 V	81 F
8/09/2018	04:45:13	420 PPM	1 min	290 PPM	11.9 V	11.8 V	81 F
8/09/2018	04:46:13	420 PPM	1 min	277 PPM	11.9 V	11.8 V	81 F
8/09/2018	04:47:13	420 PPM	1 min	286 PPM	11.9 V	11.8 V	81 F
8/09/2018	04:48:13	420 PPM	1 min	294 PPM	11.9 V	11.8 V	81 F
8/09/2018	04:49:13	420 PPM	1 min	286 PPM	11.9 V	11.8 V	81 F
8/09/2018	04:50:13	420 PPM	1 min	277 PPM	11.9 V	11.8 V	81 F
8/09/2018	04:51:13	420 PPM	1 min	294 PPM	11.9 V	11.8 V	81 F
8/09/2018	04:52:13	420 PPM	1 min	302 PPM	11.9 V	11.8 V	81 F
8/09/2018	04:53:13	420 PPM	1 min	302 PPM	11.9 V	11.8 V	81 F
8/09/2018	04:54:13	420 PPM	1 min	302 PPM	11.9 V	11.8 V	81 F
8/09/2018	04:55:13	420 PPM	1 min	302 PPM	11.9 V	11.8 V	81 F
8/09/2018	04:56:13	420 PPM	1 min	302 PPM	11.9 V	11.8 V	81 F
8/09/2018	04:57:13	420 PPM	1 min	302 PPM	11.9 V	11.8 V	81 F
8/09/2018	04:58:13	420 PPM	1 min	302 PPM	11.9 V	11.8 V	81 F
8/09/2018	04:59:13	420 PPM	1 min	302 PPM	11.9 V	11.8 V	81 F
8/09/2018	05:00:13	420 PPM	1 min	302 PPM	11.9 V	11.8 V	81 F
8/09/2018	05:01:13	420 PPM	1 min	302 PPM	11.9 V	11.8 V	81 F
8/09/2018	05:02:13	420 PPM	1 min	302 PPM	11.9 V	11.8 V	81 F
8/09/2018	05:03:13	420 PPM	1 min	302 PPM	11.9 V	11.8 V	81 F
8/09/2018	05:04:13	420 PPM	1 min	302 PPM	11.9 V	11.8 V	81 F
8/09/2018	05:05:13	420 PPM	1 min	302 PPM	11.9 V	11.8 V	81 F
8/09/2018	05:06:13	420 PPM	1 min	302 PPM	11.9 V	11.8 V	81 F
8/09/2018	05:07:13	420 PPM	1 min	302 PPM	11.9 V	11.8 V	81 F
8/09/2018	05:08:13	420 PPM	1 min	302 PPM	11.9 V	11.8 V	81 F

(Sample Spreadsheet of Downloaded Data)

You can save your spreadsheet to a file by clicking the SAVE DATA Button.

END OF DATA DOWNLOAD

MODBUS RTU Protocol over RS485 Communications

The Modbus address is entered in variable N1 for the Analyzer.

Directions for Writing to this Variable

- Open the COMMAND CENTER and initiate communication with the Analyzer
- When the COMMAND CENTER communicates with the Analyzer, go to the VARIABLES Page of the COMMAND CENTER
- Go to the User Input of the Variable Page. Click on the USER INPUT and enter 'AMI' for the password when prompted. Then, return to the USER INPUT
- In the USER INPUT, enter the following to change the address of the Modbus:

  A0WN1<Address>, where <Address> is 1-255
  Note: By default, it is set to 17.

Using the Modbus RTU command, you can read the Analyzer's Modbus register(s):
(Note: There are a total of eight bytes to send)

- Byte 0 = Address (Modbus Bus Slave addressed to be entered into variable N1)
- Byte 1 = 3
- Byte 2 = 0
- Byte 3 = Register (Register equals the Starting Register for the Modbus read)
- Byte 4 = 0
- Byte 5 = Count (Count equals the Number of Registers to be read)
- Byte 6 = CRC Bytes
- Byte 7 = CRC Bytes

Table I: Holding Registers for MODEL 2010BX, 210BX, and 3010BX

Register	Number of Register	Variable	Description	Type
0	16	A0RA0	Reading	String
16	1	A0RA1	PPMX10 (Upper 16bits)	Unsigned 16 Bit
17	1	A0RA2	PPMX10 (Lower 16bits)	Unsigned 16 Bit
18	1	A0RA3	PERCENTX100	Unsigned 16 Bit
19	8	A0RA6	Override Temp Coef C2	String
27	8	A0RA7	Override Temp Coef C1	String
35	8	A0RA8	Override Temp Coef C0	String
43	8	A0RA9	Override Temp Coef Word	String
51	1	A0RB0	Output Range Index	Unsigned 16 Bit
52	8	A0RC0	Software version	String
60	1	A0RC2	Cycle Count	Unsigned 16 Bit
61	1	A0RD0	Cal Factor	Unsigned 16 Bit
62	1	A0RE3	Output Zero Offset	Unsigned 16 Bit
63	1	A0RE4	Output Span	Unsigned 16 Bit
64	1	A0RE5	Heater Control	Unsigned 16 Bit
65	1	A0RE6	Analyzer Setting Configuration	Unsigned 16 Bit
66	1	A0RF0	Alarm 1 Setpoint	Unsigned 16 Bit
67	1	A0RG0	Alarm 2 Setpoint	Unsigned 16 Bit
68	1	A0RH0	Alarm State	Unsigned 16 Bit
69	1	A0RH1	Alarm Config 2	Unsigned 16 Bit
70	1	A0RI0	Error Register 0	Unsigned 16 Bit
71	1	A0RI1	Error Register 1	Unsigned 16 Bit
72	1	A0RI2	Error Register 2	Unsigned 16 Bit
73	1	A0RI3	Error Register 3	Unsigned 16 Bit
74	8	A0RJ0	Analyzer Type	String
82	1	A0RJ1	Heater, AC Configuration	Unsigned 16 Bit
83	16	A0RK0	Latest Calibration Data	String
99	8	A0RL0	Serial Number	String
107	8	A0RL1	Tracking Number	String
115	8	A0RL2	User ID	String
123	10	A0RM0	Latest Start-up Info	String
133	2	A0RN0	Analyzer COM ID	String
135	1	A0RN1	Modbus ID	Unsigned 16 Bit
136	10	A0RO0	Latest Low Power Event	String
146	1	A0RP0	Seconds	Unsigned 16 Bit
147	1	A0RP1	Minutes	Unsigned 16 Bit
148	1	A0RP2	Hours	Unsigned 16 Bit
149	1	A0RP3	DOW	Unsigned 16 Bit

Table I: Holding Registers for MODEL 2010BX, 210BX, and 3010BX (continued)

Register	Number of Register	Variable	Description	Type
150	1	A0RP4	DOM	Unsigned 16 Bit
151	1	A0RP5	Month	Unsigned 16 Bit
152	1	A0RP6	Year	Unsigned 16 Bit
153	1	A0RP7	Log Interval	Unsigned 16 Bit
154	1	A0RT0	Block Temperature	Unsigned 16 Bit
155	1	A0RT1	Power Section Temperature	Unsigned 16 Bit
156	8	A0RT2	Actual Pressure	String
164	1	A0RT3	Power Voltage	Unsigned 16 Bit
165	1	A0RT4	Heater Feedback Voltage	Unsigned 16 Bit
166	1	A0RT5	Ambient Pressure	Unsigned 16 Bit
167	1	A0RT6	Absolute Pressure	Unsigned 16 Bit
168	1	A0RU0	Sensor Hours of Operation	Unsigned 16 Bit
169	1	A0RU1	Sensor PPM Hours Average	Unsigned 16 Bit
170	1	A0RU2	Sensor Hours Hot	Unsigned 16 Bit
171	1	A0RU3	Sensor Hours Cold	Unsigned 16 Bit
172	1	A0RU4	Sensor Hours Off	Unsigned 16 Bit
173	1	A0RU5	Last Sensor Hours of Operation	Unsigned 16 Bit
174	1	A0RU6	Last Sensor PPM Hours Average	Unsigned 16 Bit
175	1	A0RU7	Last Sensor Hours Hot	Unsigned 16 Bit
176	1	A0RU8	Last Sensor Hours Cold	Unsigned 16 Bit
177	1	A0RU9	Last Sensor Hours Off	Unsigned 16 Bit
178	8	A0RV0	Sensor Date of Last Reset	String
186	8	A0RV1	Sensor Serial Number	String
194	1	A0RW0	Alarm Pulse Time	Unsigned 16 Bit
195	1	A0RX0	Delay on for Alarm 1	Unsigned 16 Bit
196	1	A0RY0	Delay on for Alarm 2	Unsigned 16 Bit
197	1	A0RZ0	Alarm Hold-off Time	Unsigned 16 Bit

Table II: Coils

Coil	Name	Meaning if Set (1)	Meaning if Reset (0)
24	Allow writing into Analyzer	Enables writing	Disables writing

Table III: Diagnostic Functions

The diagnostic functions 0, 1, 2, 4, 10, 11, 12, 13, 14, 15, and 16 are supported.

Note that each counter will count up to 65535 but will not go any higher. They can be reset to zero with the 10 command.

Function	Command (without CRC)	Action	Notes
0	11 08 00 00	Echo Message	Return the Exact Sames Message
1	11 08 00 01	Restart Communication	Restarts from a Previous 4 Command
2	11 08 00 02	Return Error Byte	Returns Same as Holding Register 23
4	11 08 00 04	Listen Only Mode	Stops the Analyzer from Responding to Anything
10	11 08 00 0A	Clear All Diagnostic Counters	Clear Each of the Diagnostic Counters to Zero
11	11 08 00 0B	Total Message Count	Total Number of Messages Seen by the Analyzer
12	11 08 00 0C	CRC Error Count	Number of CRC Errors Seen by the Analyzer
13	11 08 00 0D	Exception Count	Number of Invalid Modbus Commands
14	11 08 00 0E	Number of Slave Messages	Number of Messages the Analyzer has Returned
15	11 08 00 0F	Number of No Responses	Number of Messages Addressed to the Analyzer that It did not Respond to
16	11 08 00 10	Number of NAK Responses	Number of Messages with Incorrect Parameters (such as Invalid Registers or Out-of-bounds Values) Seen by the Analyzer

END OF MODBUS 485 COMMUNICAITONS PROTOCOL

TROUBLESHOOTING, MAINTENANCE & REPAIRS

The following section identifies potential system issues and provides possible resolutions. If you are unable to resolve an issue after following the suggestion(s) shown in this section, contact AMI for further support.

Error Status Display: Error Reference Guide

The following section shows the existing error(s) that can be detected by the Analyzer. Each error has an assigned number and message.

Error Number	Message
0	
1	
2	
3	
4	
5	
6	Power Supply Too Low
7	PPM Over Range
8	
9	
10	
11	
12	Over / Under Pressure
13	
14	Over / Under Temperature
15	
16	
17	Memory Failures
18	
19	Analytical Timeout
20	Analytical Warm-up
21	
22	Output Range Index Wrong
23	No Sensor Current
24	Span Too Low
25	Span Too High
26	
27	Percent Over Range
28	No Heater Feedback
29	Ambient and Cell Block Temperature Conflict
30	Heater Voltage Too High
31	
32	
33	
34	
35	
36	ADC Timeout
37	
38	
39	

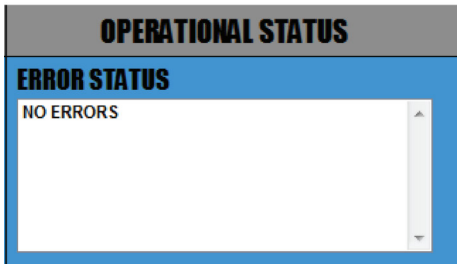

Note:
All error codes can be displayed on the Error Status Display. Once troubleshooting is completed and the error is resolved, the message will automatically be removed from the Error Status Display by the Analyzer.

Note:
The LCD of the Analyzer will display 'fail-safe' error code(s).

If a 'fail-safe' error code is detected, the 'error number' and 'ERR" will display and blink on the LCD (as indicated above).

Once the troubleshooting is completed and the error is resolved, the error code will no longer display.

TROUBLESHOOTING

Analyzer Does Not Power Up

Resolution(s):

- Check that the power is connected properly and you have the correct version for your power supply
- Check that the power supply voltage is between 10V and 24VDC or 100V to 240VAC
- Verify that the power plug is seated fully in its socket all the way and no whiskers or wires are shorting to each other or to the cover

Analyzer Reads Too Low

Resolution(s):

- If the SPAN FACTOR is currently too high for adjustment, replace the H_2S sensor
- Calibrate with Span Gas (refer to pages 22 – 23)

Analyzer Reads Too High

Resolution(s):

- Leak test all external fittings. We recommend using SNOOP® (see page 19)
- Check that the gas flow rate is between 1.0 to 2.0 SCFH

Analyzer Reads Zero

Resolution(s):

- Hook up a tank of Span Gas and confirm the Analyzer responds upscale accurately.

No Voltage or Current Output to Recording Device

Resolution(s):

- Check that the output wires are properly stripped and connected at their correct positions at their respective terminals

---

Analyzer Refuses to Accept Front Panel Settings

Resolution(s):

- Use the ***COMMAND CENTER*** **Software** to verify that the Security Settings match your preference

---

No Output Alarm Indication

Resolution(s):

- Verify that the alarm and alarm delay setpoints are correct
- Confirm the Alarm Delay or Alarm Hold Off setting is correct
- Check that the output wires are properly stripped and connected at their correct positions at their respective terminals
- Verify that the alarms on the Analyzer are properly configured using the ***COMMAND CENTER*** **Software** (see pages 32 – 35)

'Err' Flashes on the LCD

Resolution(s):

- Look up the Error Code on page 44 and troubleshoot/resolve it
- If you cannot resolve, contact AMI for further support

Display Pressure Reading Not Correct

Resolution(s):

- Perform the Initiation of the Pressure Sensor Procedure on page 15

MAINTENANCE

Sensor Replacement

It is recommended that the sensor be replaced when the Span Factor exceeds a value of 980.

Action:

- Refer to page 21 for instructions on how to replace the sensor
- Refer to page 23 for instructions on how to view the Span Factor

Analyzer Calibration

For the best accuracy, it is recommended that the Analyzer is calibrated every 30 to 45 days.

Action:

- Refer to pages 22 to 23 for instructions on how to perform a calibration

Sealing/Ingress Protection Maintenance

Whenever the Adalet Explosion-proof cap is opened, visually inspect the O-ring for any signs of damage or excessive wear.

Action:

- If the O-ring needs to be replaced, contact AMI

IMPORTANT MESSAGE ABOUT REPAIRS

Where repair is possible:

WARNING

SUBSTITUTION OF COMPONENTS MAY IMPAIR INTRINSIC SAFETY.

LE REMPLACEMENT DE COMPOSANTS PEUT COMPROMETTRE LA SECURITE INTRINSEQUE.

IMPORTANT MESSAGE ABOUT CLEANING REQUIREMENTS

The Analyzer is designed to function properly without cleaning requirements.

For any other issue not covered in this section, contact AMI at 714.848.5533 or visit us at www.*amio2*.com for support.

END OF TROUBLE SHOOTING, MAINTENANCE & REPAIRS

SPECIFICATIONS

USAGE

Both indoor and outdoor use

Altitude for Use	≤2,500 meters for AC model and ≤5,500 meters for DC model
Relative Humidity	<95%, non-condensing
Ingress Protection	IP54

PHYSICAL

Dimensions	13.3"W x 10.0"H x 5.1"D (33.8 cm x 25.4 cm x 13.0 cm)
Weight	16.0 lbs (7.26 kg)
Digital Display	4–digit LCD (reads full scale from 0.00 ppm to 25.0%)
Mounting	Wall mount or 2.0" pipe
Gas Connections	¼" 316 S.S. compression fittings
Wetted Parts	316 S.S. fittings, electro-less nickel-plated cell block, gold-plated contacts, acrylic-flow meter & Vitron O-rings
Materials	Case (painted aluminum, Door Seal (urethane foam), Window (plastic), O-ring (neoprene)

TECHNOLOGY

Method of Measurement	Electrochemical Sensor
Key Technologies	***ELIMINATOR CELL BLOCK™***, ***COMMAND CENTER Interface Software*** (which includes the following: Datalogger, Error Status Display, Brown-out History, Power-up History, USB Virtual Comport, Modbus RS485 and Modbus TCP/IP)

PERFORMANCE

Low Minimum Detection Threshold	0.05 ppm of H_2S
Response Time	90% full scale response times for these specified ranges: <120 sec for 0 – 100 ppm @1.5SCFH <120 sec for 0 – 2000 ppm @1.5SCFH
Response to Methyl Mercaptan	40% of actual concentration
Response to Sulfur Dioxide	18% of actual concentration
Repeatability	±1% of range or ±0.2 ppm of H_2S, whichever is greater
Diurnal Temperature Specification	< ±2% of scale over temperature range
Data Collection Capacity	15 days of data recording @1 datapoint per minute
Inlet Gas Pressure	0.5 –150 psig (0.03 –10.3 bar)
Protection	RFI-protected

OPERATION

Analog Output Ranges	4 user selectable ranges (0–10 ppm, 0–50 ppm, 0–100 ppm, 0–200 ppm), optional output ranges (0–100 ppm, 0–500 ppm, 0–1000 ppm, 0–2000 ppm)
Operating Temperature Range	non-heated: 25°F to 115°F (-3.9°C to 46°C), heated: -20°F to 115°F (-29°C to 46°C), with **Extreme Weather Enclosure**: -40°F to 115°F (-40°C to 46°C)
Recommended Flow Rate	1.0 to 2.0 SCFH
Isolated Analog Output Signals	1–5 VDC and 4–20 mA

ALARMS

Number of Alarms	2 Fully, Adjustable H_2S Concentration Alarms with Dry Contacts
Alarm Delays	Programmable from 0 – 300 minutes
Alarm Hold-off / Bypass	Programmable from 0 – 120 minutes
Alarm Relay Contact Rating	5A@115VAC or 24VDC

AREA CLASSIFICATION

Area Classification	US/Canada: Class I, Division 1, Groups B-D, T4 Class I Zone 0/1, AEx ia/db IIB+H2 T4 Ga/Gb Ex ia/db IIB+H2 T4 Ga/Gb -32°C ≤ Tamb ≤ +46°C IECEX: Ex ia/db IIB+H2 T4 Ga/Gb -32°C ≤ Tamb ≤ +46°C ATEX: Ex II 1/2 G Ex ia/db IIB+H2 T4 Ga/Gb -32°C ≤ Tamb ≤ +46°C

POWER

Requirements	10 – 24 VDC, Um 24 VDC, 150 mA max	(non-heated)
	10 – 24 VDC, Um 24 VDC, 2.2 Amps max	(heated)
	100 – 240 VAC, Um 240 VAC, 150 mA max	(non-heated)
	100 – 240 VAC, Um 240 VAC, 550 mA max	(heated)
	Use only approved Class 2 or limited energy circuits	

AMI® WARRANTY & SUPPORT

LIMITED WARRANTY/DISCLAIMER

The warranty period is **TWO YEARS** for the Analyzer. Any failure of material or workmanship will be repaired free of charge for that specified period from the original purchase (shipping date) of the instrument. AMI will also pay for 1-way ground shipment back to the customer.

The warranty period for the oxygen sensor is 6 months.

Any indication of abuse or tampering of the instrument will void the warranty.

Receiving the Analyzer
When you receive the instrument, check the package for evidence of damage and if any is found contact the shipper. Although every effort has been made to assure that the Analyzer meets all performance specifications, AMI takes no responsibility for any losses incurred by reason of the failure of this analyzer or associated components. AMI's obligation is expressly limited to the Analyzer itself.

EXCEPT FOR THE FOREGOING LIMITED WARRANTY, AMI MAKES NO WARRANTIES, EXPRESS, IMPLIED OR STATUTORY, AS TO THE NON-INFRINGEMENT OF THIRD-PARTY RIGHTS, MERCHANTABILITY, OR FITNESS FOR A PARTICULAR PURPOSE. IF APPICABLE LAW REQUIRES ANY WARRANTIES WITH RESPECT TO THE SYSTEM, ALL SUCH WARRANTIES ARE LIMITED IN DURATION TO TWO (2) YEARS FROM THE DATE OF DELIVERY.

LIMITATION OF LIABILITY

IN NO EVENT WILL AMI BE LIABLE TO YOU FOR ANY SPECIAL DAMAGES, INCLUDING ANY LOST PROFITS, LOST SAVINGS, OR OTHER INCIDENTAL OR CONSEQUENTIAL DAMAGES, EVEN IF THE COMPANY HAS BEEN ADVISED OF THE POSSIBILITY OF SUCH DAMAGES, OR FOR ANY CLAIM BY ANY OTHER PARTY.

LIMITATION OF REMEDIES

AMI's entire liability and your exclusive remedy under the Limited Warranty (see above) shall be the replacement of any Analyzer that is returned to the Company and does not meet the Company's Limited Warranty.

intertek
Total Quality. Assured.

AUTHORIZATION TO MARK

This authorizes the application of the Certification Mark(s) shown below to the models described in the Product(s) Covered section when made in accordance with the conditions set forth in the Certification Agreement and Listing Report. This authorization also applies to multiple listee model(s) identified on the correlation page of the Listing Report.

This document is the property of Intertek Testing Services and is not transferable. The certification mark(s) may be applied only at the location of the Party Authorized To Apply Mark.

Applicant:	Advanced Micro Instruments, Inc. 225 Paularino Avenue	**Manufacturer:**	Advanced Micro Instruments, Inc. 225 Paularino Avenue
Address:	Costa Mesa, CA 92626	**Address:**	Costa Mesa, CA 92626
Country:	USA	**Country:**	USA
Contact:	Mr. Charles Schacht	**Contact:**	Mr. Charles Schacht
Phone:	(714) 848-5533	**Phone:**	(714) 848-5533
FAX:	NA	**FAX:**	NA
Email:	cschacht@amio2.com	**Email:**	cschacht@amio2.com

Party Authorized To Apply Mark: Same as Manufacturer
Report Issuing Office: Dallas, TX

Control Number: 5015616 **Authorized by:** Liuvia Medina

for L. Matthew Snyder, Certification Manager

C ETL LISTED US
Intertek

This document supersedes all previous Authorizations to Mark for the noted Report Number.

This Authorization to Mark is for the exclusive use of Intertek's Client and is provided pursuant to the Certification agreement between Intertek and its Client. Intertek's responsibility and liability are limited to the terms and conditions of the agreement. Intertek assumes no liability to any party, other than to the Client in accordance with the agreement, for any loss, expense or damage occasioned by the use of this Authorization to Mark. Only the Client is authorized to permit copying or distribution of this Authorization to Mark and then only in its entirety. Use of Intertek's Certification mark is restricted to the conditions laid out in the agreement and in this Authorization to Mark. Any further use of the Intertek name for the sale or advertisement of the tested material, product or service must first be approved in writing by Intertek. Initial Factory Assessments and Follow up Services are for the purpose of assuring appropriate usage of the Certification mark in accordance with the agreement, they are not for the purposes of production quality control and do not relieve the Client of their obligations in this respect.

Intertek Testing Services NA Inc.
545 East Algonquin Road, Arlington Heights, IL 60005
Telephone 800-345-3851 or 847-439-5667 Fax 312-283-1672

Standard(s):

Electrical Equipment For Measurement, Control, And Laboratory Use; Part 1: General Requirements [UL 61010-1:2012 Ed.3+R:29Apr2016]

Safety Requirements for Electrical Equipment for Measurement, Control, and Laboratory Use Part 1: General Requirements [CSA C22.2#61010-1-12:2012 Ed.3]

Explosive Atmospheres - Part 0: Equipment - General Requirements [UL 60079-0:2019 Ed.7]

Standard for Safety Explosive Atmospheres - Part 1: Equipment Protection by Flameproof Enclosures “d" [UL 60079-1:2015 Ed.7+R:23Jan2020]

Explosive Atmospheres - Part 11: Equipment Protection by Intrinsic Safety "i" [UL 60079-11:2013 Ed.6]

Explosive Atmospheres - Part 26: Equipment with Equipment Protection Level (EPL) Ga [UL 60079-26:2017 Ed.3]

Explosive Atmospheres — Part 0: Equipment — General Requirements [CSA C22.2#60079-0:2019 Ed.4]

Explosive Atmospheres - Part 1: Equipment Protection By Flameproof Enclosures "D" [CSA C22.2#60079-1:2016 Ed.3]

Explosive Atmospheres - Part 11: Equipment Protection By Intrinsic Safety "i" [CSA C22.2#60079-11:2014 Ed.2]

Explosive atmospheres - Part 26: Equipment with equipment protection level (EPL) Ga [CSA C22.2#60079-26:2016 Ed.1]

Intrinsically Safe Apparatus and Associated Apparatus for Use in Class I, II, and III, Division 1, Hazardous (Classified) Locations [UL 913:2013 Ed.8]

Explosion-Proof and Dust-Ignition-Proof Electrical Equipment for use in Hazardous (Classified) Locations [UL 1203:2013 Ed.5+R:30Jan2020]

Explosion-Proof Enclosures For Use In Class I Hazardous Locations (R2016) [CSA C22.2#30:1986 Ed.3+G1;G2]

Product:

Gas Analyzer

Hazardous location marking:
Class I, Division 1, Groups B-D, T4
Class I, Zone 0/1 AEx ia/db IIB+H2 T4 Ga/Gb
-32°C ≤ Tamb ≤ +46°C
CSA Certificate number: ETL20CA104018983X

AUTHORIZATION TO MARK

	210BX followed by -AC or -DC; may be followed by -HEATED.
Models:	2010BX followed by -AC or -DC; may be followed by -HEATED.
	3010BX followed by -AC or -DC; may be followed by -HEATED.

IECEx Certificate of Conformity

INTERNATIONAL ELECTROTECHNICAL COMMISSION
IEC Certification System for Explosive Atmospheres

for rules and details of the IECEx Scheme visit www.iecex.com

Certificate No.:	**IECEx ETL 20.0036X**	Page 1 of 3	Certificate history:
Status:	**Current**	Issue No: 0	
Date of Issue:	2020-09-14		
Applicant:	**Advanced Micro Instruments, Inc.** 225 Paularino Avenue Costa Mesa, CA 92626 **United States of America**		
Equipment:	**Gas Analyzers, Models: 210BX-**-******, 2010BX-**-******, 3010BX-**-********		
Optional accessory:	None		
Type of Protection:	**Flameproof 'db', Intrinsic safety 'ia'**		
Marking:	Ex ia/db IIB+H2 T4 Ga/Gb -32°C ≤ Tamb ≤ +46°C IECEx ETL 20.0036X		

Approved for issue on behalf of the IECEx Certification Body:	**Kevin J. Wolf**
Position:	**Certification Officer**
Signature: (for printed version)	
Date:	

1. This certificate and schedule may only be reproduced in full.
2. This certificate is not transferable and remains the property of the issuing body.
3. The Status and authenticity of this certificate may be verified by visiting www.iecex.com or use of this QR Code.

Certificate issued by:

Intertek
3933 US Route 11 South
Cortland NY 13045-2995
United States of America

EU-TYPE EXAMINATION
CERTIFICATE

Equipment or Protective System Intended for use in Potentially Explosive Atmospheres Directive 2014/34/EU

1. **EU-Type Examination Certificate Number:** **ITS20ATEX105703X** **Issue 00**

2. **Product:** Gas Analyzers

   210BX followed by -AC or -DC; may be followed by -HEATED.

   2010BX followed by -AC or -DC; may be followed by -HEATED.

   3010BX followed by -AC or -DC; may be followed by -HEATED.

3. **Manufacturer:** Advanced Micro Instruments, Inc.

4. **Address:** 225 Paularino Avenue, Costa Mesa, CA 92626, USA

5. This product and any acceptable variation thereto is specified in the schedule to this certificate and the documents therein referred to.

6. Intertek Testing and Certification Limited, Notified Body number 0359 in accordance with Article 17 of Directive 2014/34/EU of the European Parliament and of the Council dated 26 February 2014, certifies that the product has been found to comply with the Essential Health and Safety Requirements relating to the design and construction of products intended for use in potentially explosive atmospheres given in Annex II of the Directive.

7. Compliance with the Essential Health and Safety Requirements has been assured by compliance with EN 60079-0:2018, EN 60079-1:2014, EN 60079-11: 2012 and EN 60079-26: 2014 except in respect of those requirements referred to within item 14 of the Schedule.

8. If the sign “X” is placed after the certificate number, it indicates that the product is subject to the special conditions of use specified in the Schedule to this certificate.

9. This EU-Type Examination Certificate relates only to the design and construction of the specified product. Further requirements of the Directive apply to the manufacturing process and supply of this product. These are not covered by this certificate.

10. The marking of the product shall include the following:

    II 1/2 G Ex ia/db IIB + H2 T4 Ga/Gb

    -32°C ≤ Ta ≤ +46°C

Certification Officer: Kevin J. Wolf **Date:** 14 Septemebr 2020

Kevin J. Wolf

This Certificate is for the exclusive use of Intertek's client and is provided pursuant to the agreement between Intertek and its Client. Intertek's responsibility and liability are limited to the terms and conditions of the agreement. Intertek assumes no liability to any party, other than to the Client in accordance with the agreement, for any loss, expense or damage occasioned by the use of this Certificate. Only the Client is authorized to permit copying or distribution of this Certificate and then only in its entirety. Any use of the Intertek name or one of its marks for the sale or advertisement of the tested material, product or service must first be approved in writing by Intertek.
Intertek Testing & Certification Limited, Cleeve Road, Leatherhead, Surrey, KT22 7SA

ADVANCED MICRO INSTRUMENTS

HIGH PERFORMANCE **RELIABILITY** **INTUITIVE DESIGN**

www.***amio2***.com

Tel 714.848.5533
Fax 714.848.4545

OM-300-035 Rev E
09/24/2020

© Advanced Micro Instruments, Inc.

ADDRESS:
Advanced Micro Instruments, Inc.
225 Paularino Avenue
Costa Mesa, CA 92626

THERMAL OXIDIZER EMISSION CALCULATIONS

GIVEN

Biogas Parameters

Flow Rate	658	SCFM
Flow Rate	1,058	Nm3/hr
Flow Rate	25,385	Nm3/day
Flow Rate	64,359	lb/day
CH4	1.41	%
CO2	97.53	%
N2	0.58	%
O2	0.08	%
Heat content	528	BTU/SCF

Conversion factors

2.535313	lb/Nm3
2.2E-06	lb/mg
1.60747	SCFM/Nm3/hr

Emission factors

PM	7.6	lb/MMSCF	AP-42 Table 1.4-2
SOx	0.6	lb/MMSCF	AP-42 Table 1.4-2
NOx	100	lb/MMSCF	AP-42 Table 1.4-1
CO	84	lb/MMSCF	AP-42 Table 1.4-1
VOC	5.5	lb/MMSCF	AP-42 Table 1.4-2
CO2	115	lb/MMBTU	Engineering standard

Manufacturer data

Equpment	Griffith RTO Model 5	
Power Rating	0.7	MMBTU/hr

Engineering data

Fuel BTU	1,050	BTU/CF
Biogas density	1.15	kg/Nm3
CH4 destruction	98	%

CALCULATIONS

Fuel consumption	0.0007	MMSCF/hr
Annual consumption	6	MMSCF/yr

Uncontrolled

Process Gas					at 8,760 hours	
CH4	38	lb/hr	907	lb/day	166	ton/yr
CO2	2,615	lb/hr	62,770	lb/day	11455	ton/yr
N2	16	lb/hr	373	lb/day	68	ton/yr
O2	2	lb/hr	51	lb/day	9	ton/yr

Controlled

Natural Gas Combustion			at 8,760 hours	
PM	0.0051	lb/hr	0.022	ton/yr
SOx	0.0004	lb/hr	0.002	ton/yr
NOx	0.067	lb/hr	0.29	ton/yr
CO	0.056	lb/hr	0.25	ton/yr
VOC	0.0037	lb/hr	0.016	ton/yr

Process Gas Combustion			at 8,760 hours	
CH4	0.76	lb/hr	3.3	ton/yr
CO2 pass thru	2,615	lb/hr	11,455	ton/yr
CO2 from comb	81	lb/hr	353	ton/yr

Total			at 8,760 hours	
PM	0.0051	lb/hr	0.022	ton/yr
SOx	0.0004	lb/hr	0.002	ton/yr
NOx	0.252	lb/hr *	1.10	ton/yr *
CO	0.056	lb/hr	0.25	ton/yr
VOC	0.0037	lb/hr	0.016	ton/yr
CH4	0.76	lb/hr	3.3	ton/yr
CO2	2,696	lb/hr	11,808	ton/yr

* NOx emissions increased from 0.067 lb/hr and 0.29 ton/yr to 0.252 lb/hr and 1.10 ton/yr per email from Jordan Matthews (DNREC).

II. GENERAL NOTICES

NOTICE

Read All Instructions before Using the Equipment

This instruction manual was prepared to serve as a general guide for installing, operating, and maintaining industrial process or combustion equipment furnished by this company.

It is intended for use by qualified personnel with knowledge of operating industrial equipment. It is not intended to cover all possible variations in equipment or address every specific operating problem which may arise.

Each person is responsible for adhering to all warnings or cautions provided in this manual. In addition to any general safety measures provided in this manual, each person must comply with all current national, state, local, and company safety regulations at all times.

Safety symbols appearing within comply with ISO 3864.

⚠ DANGER Indicates a hazard with a high level of risk which, if not avoided will result in death or serious injury.

⚠ WARNING Indicates a hazard with a medium level of risk which, if not avoided may result in death or serious injury.

⚠ CAUTION Indicates a hazard with a low level of risk which, if not avoided will result in minor or moderate injury.

EXAMPLE

© 2022 JOHN ZINK COMPANY, LLC
Products or systems described within may be protected by one or more U.S. patents.
For a list of relevant patents and trademarks, please see johnzinkhamworthy.com/legal-notices.

III. INTRODUCTION

This manual provides an overview of a John Zink® Biogas Flare System. The system consists of an Elevated ZEF™ Flare and Blower Skid Assembly containing a ZMS Moisture Separator, Gas Blowers, and with Flare Control Panel. Pertinent information required to operate and maintain safely the John Zink supplied equipment is located within these instructions.

A John Zink Biogas Flare System is designed to destroy safely common organic compounds generated by various biological or naturally occurring processes. Automated operation commonly is controlled with a processor, or programmable logic controller (PLC), which receives signals and generates commands, while monitoring specific conditions. If an undesirable operating condition occurs, the control system adjusts operating parameters to correct the situation or safely discontinues operation. Control of the Elevated ZEF Flare typically includes an automatic ignition sequence and fail-safe controls. Thermocouples monitor pilot flame or main flame and integrated safety features are necessary to prevent equipment damage.

Please become familiar with this manual. Contact John Zink Company with any questions or to request additional assistance.

EXAMPLE

© 2022 JOHN ZINK COMPANY, LLC
Products or systems described within may be protected by one or more U.S. patents.
For a list of relevant patents and trademarks, please see johnzinkhamworthy.com/legal-notices.

IV. SAFETY SUMMARY

The following general safety precautions apply to operating and maintaining a John Zink® Biogas Flare System. Instructions contained in this manual are in addition to, and do not replace, existing operating procedures and policies of the operating company and owner with regard to standard safety precautions for flare operation and maintenance.

DANGER

ARC FLASH AND/OR SHOCK HAZARD

High voltages capable of causing injury or death are associated with this equipment. Use extreme caution when servicing electrical enclosures or any other electrical components. Disconnect the electrical source of any circuit on which service is being performed and lock open the corresponding disconnect switch. Ensure electrical enclosures and components are grounded properly before applying power.

NOTICE

If electrical conduit is installed for electrical wiring, any necessary conduit seal fitting must be poured before operating equipment in normal service. This is a customer or site responsibility and not performed at the factory.

DANGER

TOXIC FUMES AND VAPORS

Industrial process and combustion equipment may contain or produce toxic gases. Always consider appropriate safety precautions whenever personnel may be exposed to process gases. In particular, exposure may occur during close inspection of a flare tip or pilot and during removal or maintenance of equipment attached to gas supply pipe.

EXAMPLE

© 2022 JOHN ZINK COMPANY, LLC
Products or systems described within may be protected by one or more U.S. patents.
For a list of relevant patents and trademarks, please see johnzinkhamworthy.com/legal-notices.

⚠WARNING

PINCH OR CRUSH HAZARD

Do not operate equipment unless supplied guards, shields, and covers are installed for rotating equipment, moving components, and automated devices (mechanical, electrical, pneumatic, or hydraulic).

Equipment may start automatically. Keep appendages (hands, arms, legs) away from rotating equipment, which may suddenly start without warning.

⚠WARNING

PERSONAL PROTECTION EQUIPMENT

Some or all of the following safety equipment will be necessary when installing, operating, or maintaining this equipment:

- safety glasses
- hard hat
- ear plugs or hearing protection
- gloves
- safety shoes
- fire retardant or resistant clothing
- respirator (NIOSH approved or better)
- electrical (NFPA 70e)
- face shield

⚠WARNING

THERMAL RADIATION

Flares are capable of producing extremely high thermal radiation levels near the flame. Personnel exposed to such radiation levels may suffer severe burns. Equipment located near the flame must be designed for high temperature exposure. Contact John Zink Company before locating either personnel or equipment in an area where potential radiation levels are unknown or where radiation levels may exceed safety limits.

EXAMPLE

© 2022 JOHN ZINK COMPANY, LLC
Products or systems described within may be protected by one or more U.S. patents.
For a list of relevant patents and trademarks, please see johnzinkhamworthy.com/legal-notices.

⚠ CAUTION

Elevated surface temperatures may exist during certain operating conditions. Exercise caution while near equipment to prevent burns.

EXAMPLE

© 2022 JOHN ZINK COMPANY, LLC
Products or systems described within may be protected by one or more U.S. patents.
For a list of relevant patents and trademarks, please see johnzinkhamworthy.com/legal-notices.

V. RECEIPT AND INSTALLATION

Receipt

Upon delivery to the site and prior to installation, carefully examine equipment for damage. A claim will be filed through the freight company and their insurance agent only if damage sustained during shipment is reported properly. To assure prompt and accurate processing of any claim, the following is recommended:

1. Inspect each item as it is unloaded or uncrated. Note any damage or shortages on shipping documentation before signing for delivery acceptance.
2. If cargo cannot be inspected upon arrival, sign delivery acceptance documents with the following qualifications:

   "accepted subject to future inspection"

3. Inspect cargo as soon as possible, and no later than 10 days after delivery.
4. If damage or shortages are apparent, notify the freight company immediately and supply an itemized damage or shortage list. In addition, notify John Zink Company to initiate prompt replacement or repair procedures.

Installation

Reference Drawings

When planning and performing equipment installation, refer to drawings contained in Section XIII, "Reference Drawings" as follows:

D-F-9000000-150	Process and Instrument Diagram
D-F-9000000-301	Elevated Biogas Flare
D-F-9000000-302	EEP-502 ZEUS™ Pilot
D-F-9000000-303	ZMS Moisture Separator
D-F-9000000-304	Blower Skid Assembly
D-F-9000000-400, Sheet 1	Panel Rack Assembly
D-F-9000000-400, Sheet 2	Panel Detail
D-F-9000000-401 through D-F-9000000-404	Wiring Diagram

Details of specific components appear on component specification sheets located in Section XIV, "Specification Sheets". Refer to manufacturer instructions in Section XVIII, "Manufacturer Information" for specific installation requirements of individual components.

General

1. Installation, connection, and assembly of the stack, any remaining piping, electrical conduit, wiring, supports, field or finish painting, heat tracing, external insulation, and lightning protection are not the responsibility of John Zink Company.
2. Ensure foundations are level and designed for site soil conditions considering loads the equipment will produce. Required anchor bolt and support locations appear on the reference drawings.

EXAMPLE

© 2022 JOHN ZINK COMPANY, LLC
Products or systems described within may be protected by one or more U.S. patents.
For a list of relevant patents and trademarks, please see johnzinkhamworthy.com/legal-notices.

3. Ensure equipment is grounded adequately for site soil conditions and as directed by local electric codes.
4. Review reference drawings for electrical and process piping connections to the system.
5. Power wires, thermocouple wires, and signal wires each are to be installed in separate conduit. Wire separation is necessary to avoid electrical interference problems which may affect equipment performance.
6. Ignition rod insulators in the pilot are fragile. Verify insulators are not damaged and the rod, insulator bracket, and insulators are secure.
7. Verify thermocouple assemblies are not damaged.
8. Clean inside all system piping and remove sand, rocks, weld slag, or any other debris immediately prior to assembly or installation. Use high pressure air to clear piping after assembly and installation.

NOTICE

Ensure adequate spreader bars are utilized when lifting, as lifting lugs typically are designed for lifting cables, slings, or chains to remain vertical (±10° variation from vertical).

Ethylene Propylene Diene Monomer (EPDM) gasket material is not recommended for methane applications.

Mechanical - Stack

1. Position the flare stack, D-701-1, on a concrete foundation by connecting a crane with spreader bar to the lifting lugs.
2. Bolt the stack to the foundation.
3. Mount the arrester, FA-107, directly to the stack inlet flange, connection N1, with bolts, nuts, and gasket.
4. Mount the thermocouple, TE-107, in the arrester body downstream of the internal element.
5. Verify the drain plug at the flare inlet, connection C1, is secure.
6. Verify the pilot assembly with pilot thermocouple, TE-307, is attached to the stack securely.
7. Mount the Ignition Panel, PNL-103, to brackets on the stack exterior with bolts and nuts provided.
8. Verify the windshield and the main thermocouple, TE-201 and TE-202, are attached to the stack securely.
9. Conduit attached to each main thermocouple, TE-201 and TE-202, was secured for transport in the middle with a u-bolt. Ensure each u-bolt is loose to allow raising or lowering the thermocouple if necessary.
10. Install the differential pressure gauge, PDI-107, and connect with stainless steel tubing. Locate the isolation valve, BV-107B, downstream of the arrester element.

Mechanical - Skid

EXAMPLE

© 2022 JOHN ZINK COMPANY, LLC
Products or systems described within may be protected by one or more U.S. patents.
For a list of relevant patents and trademarks, please see johnzinkhamworthy.com/legal-notices.

1. Position the skid assembly, D-704-1, on a concrete foundation by connecting a crane with spreader bar to lifting lugs.
2. Bolt the skid to the foundation.
3. Although gas blower mounting bolts are tightened prior to shipment, failure to loosen these bolts before blower operation may void the blower warranty.

NOTICE

The gas blower and motor are mounted on a common steel frame. Do not tighten this common frame against a concrete foundation or other steel skid structure, as doing so voids the warranty.

4. Confirm all components mounted on the skid remained properly installed and securely attached during shipment.
5. Connect a compressed air or nitrogen source to each pneumatic actuator.
6. Connect gas supply pipe with supports to the inlet flange, connection N20, at the ZMS Moisture Separator, V-101, with bolts, nuts, and gasket.
7. Connect any condensate drains and valves to the gas blower or ZMS Moisture Separator, as required.

Mechanical - Field Pipe

1. Install gas pipe with supports and an expansion joint, if necessary, between the skid outlet flange, connection N24, and the arrester, FA-107, at the flare inlet.
2. Connect gas pipe to each low pressure continuous pilot inlet flange, connection N2.
3. Mount the flow meter, FE-107, in the gas pipe. For proper performance, the manufacturer requires a minimum distance of ten pipe diameters of straight, undisturbed flow upstream of the flow meter, and five diameters of straight, undisturbed flow downstream of the flow meter.
4. Mount the pilot gas pipe section, ST-10668, (containing PCV-302, SV-303, HV-304, PI-305) within 5' of the flare inlet flange.
5. Connect a natural gas or propane source to the pilot gas pipe section, ST-10668.
6. Install additional pilot gas pipe with supports between the pilot gas pipe section, ST-10668, and the pilot, connection C2, mounted in the stack (allow sufficient flexible hose at the pilot for adjustment).
7. Mount the pressure transmitter, PIT-100, in the gas pipe.

Electrical - Stack

1. Install conduit and connect ignition wire between the Ignition Panel, PNL-103, and pilot, connection C3.
2. Install conduit and connect power wire between the panel rack, D-750-1, and Ignition Panel, PNL-103.
3. Install conduit and connect thermocouple wire between the panel rack, D-750-1, and each thermocouple, TE-107, TE-307 (connection C5), and TE-201 (connection C4A), and TE-202 (connection C4B).

EXAMPLE

© 2022 JOHN ZINK COMPANY, LLC
Products or systems described within may be protected by one or more U.S. patents.
For a list of relevant patents and trademarks, please see johnzinkhamworthy.com/legal-notices.

NOTICE

Avoid damage from exposure to higher temperatures by connecting only rigid conduit to the pilot thermocouple rather than flexible conduit.

Electrical - Skid

1. Install conduit and connect supply power wire to the panel rack, D-750-1.

Electrical - Field Pipe

1. Install conduit and connect power wire between the panel rack, D-750-1, and the following components:

   pilot gas solenoid, SV-303
   flow meter, FE-107 (allow sufficient flexible conduit for removal)

2. Install conduit and connect signal wire between the panel rack, D-750-1, and flow meter, FE-107 (allow sufficient flexible conduit for removal).

Miscellaneous

1. Confirm final alignment of any rotating equipment after installation at the site, but before operation begins. Alignment again is recommended during commissioning and initial operation. Rotating equipment may include, but is not limited to, any gas blower, air blower, condensate pump, drain pump, recirculation pump, or air cooler.
2. Confirm all filter elements, mesh screens, and mist elimination elements are installed properly, if required.
3. Verify all pipe fittings and flanges (with gaskets, if required) are secure and all threaded nuts, bolts, and fittings are tightened properly.
4. If applicable, do not seal electrical conduit connections until system installation is verified and initial operation is complete.
5. Verify all electrical conduit fittings (with seals, if required) are secure.
6. Verify all external electrical control and power wire is selected correctly and adequate circuit protection exists.
7. Verify all electrical wiring connections are secure and all threaded terminals are tightened properly.

NOTICE

An enclosure heater is installed in the Flare Control Panel, PNL-101, to prevent internal corrosion. Individual electric motors may contain integral heaters also to prevent internal corrosion. Ensure all heaters are connected to a reliable power supply and operated

EXAMPLE

© 2022 JOHN ZINK COMPANY, LLC
Products or systems described within may be protected by one or more U.S. patents.
For a list of relevant patents and trademarks, please see johnzinkhamworthy.com/legal-notices.

continuously, especially during outside storage or when operation is discontinued for an extended duration. Consult wiring diagrams in Section XIII, "Reference Drawings" for additional details.

EXAMPLE

© 2022 JOHN ZINK COMPANY, LLC
Products or systems described within may be protected by one or more U.S. patents.
For a list of relevant patents and trademarks, please see johnzinkhamworthy.com/legal-notices.

VII. OPERATING PHILOSOPHY

The following information briefly describes recommended operating logic and sequencing for an Elevated ZEF™ Flare.

⚠WARNING

Do not circumvent any flame management sequence or any other safety sequence.

Logic

A combustion safety system, which includes a flame safeguard package, monitors specific parameters and discontinues operation if an unsafe condition occurs. Separate thermocouples detect pilot flame and main flame. Typical fault conditions include:

Pilot Flame Failure and Shutdown

A Pilot Flame Failure condition occurs, during the ignition sequence, when the pilot thermocouple is unable to detect the presence of pilot flame. When Pilot Flame Failure occurs, system operation is interrupted momentarily. Then the entire ignition sequence is repeated automatically. A Shutdown fault condition occurs only after three consecutive Failures, or unsuccessful attempts. After the final Pilot Flame Failure occurs, system operation discontinues with fault indication.

Main Flame Failure and Shutdown

A Main Flame Failure condition occurs, after the ignition sequence is complete, when the main thermocouple is unable to detect the presence of main flame. When Main Flame Failure occurs, system operation is interrupted momentarily. Then the entire ignition sequence is repeated automatically. A Shutdown fault condition occurs only after three consecutive Failures, or unsuccessful attempts. After the final Main Flame Failure occurs, system operation discontinues with fault indication.

Arrester High Temperature

An Arrester High Temperature fault condition occurs immediately when a dedicated thermocouple senses temperature at the arrester element above a permissible value. System operation discontinues with fault indication.

EXAMPLE

© 2022 JOHN ZINK COMPANY, LLC
Products or systems described within may be protected by one or more U.S. patents.
For a list of relevant patents and trademarks, please see johnzinkhamworthy.com/legal-notices.

Automatic Block Valve Fault

An automatic block valve fault condition occurs when dedicated limit, or position, switches are unable to confirm proper valve position. Both closed and open limit switches are monitored and a corresponding fault occurs if improper valve position is detected for 45 seconds consecutively. System operation discontinues with fault indication.

Other safety features include:

Thermocouple Failure
Gas Blower Failure
Emergency Stop

Upon determining the source of any alarm or fault condition and completing the necessary corrective action, a local reset is required to begin operation again.

Sequence

A typical operating sequence consists of:

Flare Control Selection

Select either local, or remote, or automatic control to initiate flare operation. Local control requires operator interaction at the control panel to start and stop operation. Remote control allows starting and stopping operation through a remote contact, without operator interaction at the control panel. Automatic control allows starting and stopping operation as gas flow increases and decreases.

Gas Blower Selection

To enable gas blower operation, individually select automatic mode for the corresponding gas blower. Otherwise, select off mode to disable the corresponding gas blower and prevent operation.

Initial Conditions

System operation is permitted only after confirming two safety conditions exist. The closed limit switch for the automatic block valve must be satisfied, proving a closed valve position. Additionally, pilot and main thermocouples must not detect the presence of flame.

Ignition Sequence

The pilot gas solenoid opens automatically, supplying gas to the pilot, the "Flare Operating" light flashes, and the ignition transformer energizes. The ignition transformer continues for ten or 60

EXAMPLE

© 2022 JOHN ZINK COMPANY, LLC
Products or systems described within may be protected by one or more U.S. patents.
For a list of relevant patents and trademarks, please see johnzinkhamworthy.com/legal-notices.

seconds and then the pilot thermocouple verifies flame is present. The pilot gas solenoid remains open.

Gas Supply

Once pilot flame is detected, the automatic block valve opens and operation of the selected gas blower begins, which supplies biogas to the flare.

Pilot Operation

For intermittent pilot operation, the pilot gas solenoid closes after opening the automatic block valve and the "Flare Operating" light illuminates. While a main thermocouple verifies flame is present, flare operation continues. For continuous pilot operation, the pilot gas solenoid remains open and the "Flare Operating" light continues flashing. While the pilot thermocouple verifies flame is present, flare operation continues.

Automatic Gas Blower Inlet Pressure Control

The inlet operating pressure (suction pressure or vacuum) may be maintained by varying automatically the rotational speed of the gas blowers with variable frequency drives. A pressure transmitter monitors gas blower inlet pressure. Gas flow is dependent on this pressure, so decreasing gas blower rotational speed decreases pressure and flow, while increasing gas blower rotational speed increases pressure and flow.

EXAMPLE

© 2022 JOHN ZINK COMPANY, LLC
Products or systems described within may be protected by one or more U.S. patents.
For a list of relevant patents and trademarks, please see johnzinkhamworthy.com/legal-notices.

VIII. COMMISSIONING

NOTICE

The presence of a qualified John Zink Company representative is recommended for initial operation.

Process and Instrument Diagram Review

The equipment is fabricated according to the reference drawings. Operating personnel need to review the Process and Instrument Diagram and become familiar with the equipment.

Mechanical Review

Verify all equipment, including valves and control components, are functional prior to operation. Also, before beginning flare operation, complete the following:

1. Verify all equipment is installed according to the reference drawings.
2. Verify all electrical devices are connected to the proper power sources.
3. For the recommended chromel-alumel type K thermocouples, the red wire is negative (-) and the yellow wire is positive (+). Confirm the thermocouple extension wire is adequate for the radiation exposure and is proper for the particular thermocouple (KX wire with insulation for Type K thermocouples).

NOTICE

Cross connecting red and yellow thermocouple wires anywhere in the circuit will nullify the thermocouple signal.

4. All system pipe must be dry and free of dirt or foreign material, including the pilot gas pipe. Verify the pilot gas pipe is dry and unobstructed by removing the mixer orifice and strainer screen, if applicable, and blowing with clean, dry air. Replace the orifice and screen when clear flow exists.
5. Verify all drain and vent valves are closed and all drain and vent plugs are secure.
6. Close all manual and isolation valves initially.
7. Verify all disconnect handles are in the OFF position.
8. Verify all circuit breakers inside the control panels are in the OFF position.
9. Place all selector switches in the OFF or CLOSED position.
10. Verify pilot gas pressure is adjusted properly (no pressure is displayed on the pressure gauge until the corresponding solenoid opens).
11. Verify the hand valve supplying compressed air or nitrogen to each pneumatic actuator is closed.

EXAMPLE

© 2022 JOHN ZINK COMPANY, LLC
Products or systems described within may be protected by one or more U.S. patents.
For a list of relevant patents and trademarks, please see johnzinkhamworthy.com/legal-notices.

IX. SYSTEM OPERATION

Preparation

1. Place all circuit breakers inside control panels in the ON position.
2. Place all disconnect handles in the ON position.
3. Place the "Panel Power" switch in the ON position and the "Power On" light illuminates.
4. Open the hand valve supplying compressed air or nitrogen to each pneumatic actuator and confirm adequate pressure is available.
5. Open the pilot gas hand valve.
6. Press the "Auto" button to select a gas blower for operation.
7. Open partially the manual butterfly valve at the corresponding gas blower inlet, and open fully the manual butterfly valve at the corresponding gas blower outlet. Open fully the manual butterfly valve at the corresponding gas blower inlet and outlet.
8. Open fully all level gauge manual valves.
9. Verify the "Emergency Stop" pushbutton is not engaged.

Starting

1. Press the "Reset" button to clear any residual conditions from the program memory.
2. Begin flare operation by pressing the "Local" and "Start" buttons, respectively.
3. The pilot gas solenoid opens and the "Flare Operating" light flashes.
4. The ignition transformer energizes for ten seconds and ignites the pilot.
5. The pilot thermocouple verifies pilot ignition and the automatic block valve opens.
6. Gas blower operation begins when the closed limit switch for the automatic block valve releases.
7. The main thermocouple verifies flame is present and the "Flare Operating" light illuminates.
8. The pilot gas solenoid closes two minutes after the open limit switch for the automatic block valve is achieved.

Operation

Refer to Section XV, "Operating Summary" for further information detailed in the following documents:

Operating Scenarios
Cause and Effect

Flare

1. The position of the main thermocouple is adjustable by raising or lowering the location of the thermocouple conduit mounting bracket near the base of the flare. The thermocouple location is optimized when the temperature detected consistently remains above the setpoint, but is not unnecessarily positioned directly in the main flame.

EXAMPLE

© 2022 JOHN ZINK COMPANY, LLC
Products or systems described within may be protected by one or more U.S. patents.
For a list of relevant patents and trademarks, please see johnzinkhamworthy.com/legal-notices.

2. A "Thermocouple Cooling" condition occurs whenever system operation is delayed while any thermocouple remains above the corresponding temperature setpoint value.

Pilot

1. Adjust each pilot gas pressure regulator until a stable, light blue flame with a defined cone shape exists.
2. For intermittent pilot operation, fuel gas is supplied to the pilot and the pilot gas solenoid, SV-303, closes two minutes after achieving the open limit switch, ZSO-102, at the automatic block valve, SOV-102.

Gas Blower

1. Adjust the position of the manual butterfly valve at the gas blower inlet to establish the amount of gas flowing to the flare. The gas blower may surge if this valve is not open sufficiently.
2. Upon receiving a start command, the motor starter contactor or variable frequency drive must confirm the command was recognized within five seconds.
3. Simultaneous operation of all gas blowers is not allowed. However, operation may be transferred between the gas blowers. If the transfer exceeds 30 seconds, the "Flare Fault" light illuminates and system operation discontinues.
4. Gas blower drain valves usually remain closed during normal system operation.

NOTICE

Suction generated from gas blower operation may prevent gravity draining liquids from the ZMS Moisture Separator.

Shutdown

Refer to Section XV, "Operating Summary" for further information detailed in the following documents:

Operating Scenarios
Cause and Effect

Normal Stop

A normal stop is available to discontinue flare operation by pressing the "Stop" button. As a result, any of the following may occur:

- corresponding fault light illuminates and fault message appears
- pilot gas solenoid closes, if open
- ignition transformer discontinues, if energized

EXAMPLE

© 2022 JOHN ZINK COMPANY, LLC
Products or systems described within may be protected by one or more U.S. patents.
For a list of relevant patents and trademarks, please see johnzinkhamworthy.com/legal-notices.

- automatic block valve closes, if open
- gas blower discontinues, if operating

When the system is not operating for an extended duration, also complete the following:

- place the "Panel Power" switch in the OFF position
- close all manual and isolation valves
- place all selector switches in the OFF or CLOSED position.

NOTICE

To start the flare system again, a fault condition must be resolved first and then cleared by pressing the "Reset" button.

Emergency Stop

To discontinue system operation immediately, press the "Emergency Stop" pushbutton, and the following occur:

- fault lights illuminate and fault message appears
- pilot gas solenoid closes, if open
- ignition transformer discontinues, if energized
- automatic block valve closes, if open
- gas blower discontinues, if operating

After releasing the "Emergency Stop" pushbutton, an operator reset is required to continue operation.

Power Failure

A power failure is caused by disrupting electrical service. The following occur:

- pilot gas solenoid closes, if open
- ignition transformer discontinues, if energized
- automatic block valve closes, if open
- gas blower discontinues, if operating

Once power is restored, the system attempts operation automatically.

Fault Conditions

Pilot Flame Failure and Shutdown occur during the ignition sequence, after three unsuccessful attempts, when flame is not detected by the pilot thermocouple.

EXAMPLE

© 2022 JOHN ZINK COMPANY, LLC
Products or systems described within may be protected by one or more U.S. patents.
For a list of relevant patents and trademarks, please see johnzinkhamworthy.com/legal-notices.

Main Flame Failure and Shutdown occur once the ignition sequence is complete, after three unsuccessful attempts, when flame is not detected by the main thermocouple.

Arrester High Temperature occurs immediately when a dedicated thermocouple senses temperature at the arrester element above a permissible value.

Thermocouple Failure occurs if thermocouple wire connectivity is disrupted by an open circuit.

An automatic block valve fault (Failed to Open or Failed to Close) occurs when dedicated limit switches are unable to confirm proper valve position.

Gas Blower Failure occurs if an operating confirmation signal from the motor starter or variable frequency drive is not returned within five seconds after the operating command was sent, or if the variable frequency drive detects a fault condition and the operating confirmation signal is removed thereafter.
As a result, the following occur:

- corresponding fault light illuminates and fault message appears
- pilot gas solenoid closes, if open
- ignition transformer discontinues, if energized
- automatic block valve closes, if open
- gas blower discontinues, if operating

A local reset is required before continuing operation.

EXAMPLE

© 2022 JOHN ZINK COMPANY, LLC
Products or systems described within may be protected by one or more U.S. patents.
For a list of relevant patents and trademarks, please see johnzinkhamworthy.com/legal-notices.

X. SYSTEM TESTING

DANGER

ARC FLASH AND/OR SHOCK HAZARD

High voltages capable of causing injury or death are associated with this equipment. Use extreme caution when servicing electrical enclosures or any other electrical components. Disconnect the electrical source of any circuit on which service is being performed and lock open the corresponding disconnect switch. Ensure electrical enclosures and components are grounded properly before applying power.

Lamp Test

a. Press the "Lamp Test" button.
b. All panel lights illuminate.

Emergency Stop

a. During normal operation, press the "Emergency Stop" pushbutton.
b. System operation discontinues immediately and the corresponding fault light illuminates.
c. Release the "Emergency Stop" pushbutton.
d. Press the "Reset" button.
e. The fault light diminishes.

Pilot Flame Failure and Shutdown

a. Press the "Stop" button.
b. Close the pilot gas hand valve.
c. Press the "Reset" button.
d. Press the "Start" button and the "Flare Operating" light flashes.
e. The pilot gas solenoid opens and the ignition transformer remains energized for ten seconds.
f. The pilot thermocouple is unable to detect flame.
g. The pilot gas solenoid closes and the ignition sequence is attempted again automatically.
h. After the third unsuccessful attempt to detect pilot flame, the "Flare Operating" light diminishes, the "Flare Fault" light illuminates, and system operation discontinues.
i. Press the "Reset" button and the "Flare Fault" light diminishes.
j. Open the pilot gas hand valve.

Automatic Block Valve Fault

a. Press the "Stop" button.
b. Disconnect the compressed air or nitrogen source from the pneumatic actuator.
c. Press the "Reset" button.
d. Press the "Start" button and the "Flare Operating" light flashes.
e. Allow the pilot to ignite and confirm the pilot proves.
f. The automatic block valve is unable to open.

EXAMPLE

© 2022 JOHN ZINK COMPANY, LLC
Products or systems described within may be protected by one or more U.S. patents.
For a list of relevant patents and trademarks, please see johnzinkhamworthy.com/legal-notices.

g. After 45 seconds, the automatic block valve open limit switch is not achieved, the "Flare Operating" light diminishes, the "Flare Fault" light illuminates, and system operation discontinues.
h. Press the "Reset" button and the "Flare Fault" light diminishes.
i. Connect the compressed air or nitrogen source to the pneumatic actuator.

XI. TROUBLESHOOTING

Problem: The "Panel On" light does not illuminate.
Possible Causes:

- main circuit breaker is off
- "Panel Power" switch is off
- light bulb is defective
- power is not connected to the panel
- connecting wires are loose

Problem: The pilot does not ignite.
Possible Causes:

- pilot gas hand valve is closed
- pilot gas source is insufficient
- pilot orifice is plugged
- ignition wire is loose or broken
- ignition transformer is defective
- pilot electrode is defective
- pilot insulators are broken
- pilot gas pressure regulator requires adjustment
- pilot gas solenoid is not functioning properly
- power is not connected to the ignition transformer or pilot gas solenoid

Problem: Pilot flame is not detected after igniting the pilot.
Possible Causes:

- thermocouple is not positioned properly
- thermocouple is damaged or defective
- thermocouple wires are reversed
- connecting wires are loose

Problem: The automatic block valve does not open.
Possible Causes:

- compressed air or nitrogen source is insufficient
- automatic block valve solenoid is not wired correctly
- valve motion is obstructed inside the pipe
- power is not connected to the automatic block valve solenoid
- corresponding control relay is not functioning properly
- connecting wires are loose

EXAMPLE

© 2022 JOHN ZINK COMPANY, LLC
Products or systems described within may be protected by one or more U.S. patents.
For a list of relevant patents and trademarks, please see johnzinkhamworthy.com/legal-notices.

Problem: Main Flame Failure or Shutdown occurs.
Possible Causes:

- gas flow or methane content is low
- thermocouple is not positioned properly
- thermocouple is damaged or defective
- gas blower manual valves are closed
- gas blower failed
- arrester is plugged
- connecting wires are loose

Problem: A gas blower fails.
Possible Causes:

- power is not connected to the motor starter or motor
- power is not connected to the variable frequency drive or motor
- motor starter circuit breaker is off
- motor starter circuit breaker is not adjusted properly
- motor starter contact is not closed
- motor starter holding coil is defective
- motor starter overload relay requires resetting
- variable frequency drive circuit breaker is off
- variable frequency drive circuit breaker is not adjusted properly
- variable frequency drive fault occurs
- gas blower manual valves are closed
- corresponding control relay is not functioning properly
- connecting wires are loose

EXAMPLE

© 2022 JOHN ZINK COMPANY, LLC
Products or systems described within may be protected by one or more U.S. patents.
For a list of relevant patents and trademarks, please see johnzinkhamworthy.com/legal-notices.

XII. MAINTENANCE

NOTICE

The following maintenance summary is designed only as a guideline and does not identify all areas or components requiring maintenance attention. A maintenance program must be developed considering existing company policy, operational experience, and manufacturer requirements. This operating manual is to be used in conjunction with, and does not replace, any company policies.

General

1. Refer to manufacturer literature in Section XVIII, "Manufacturer Information" for specific maintenance requirements of individual components.
2. Review calibration and operation procedures of all instruments in Section XVIII, "Manufacturer Information" as recommended by the manufacturer.
3. Inspect all flanges and connections for indications of leaking. Repair or replace if necessary.

Flare

1. Visually inspect the flare stack and windshield for damage or deterioration.
2. Inspect all thermocouple assemblies and replace at least once each year.
3. Inspect the pilot assembly, ignition rod, electrode, and insulators for damage once every three months. Repair or replace if necessary.
4. Verify pilot gas supply pressure and pilot ignition.
5. Remove the arrester element for cleaning every six months. Measure pressure differential across the arrester element. If the value exceeds 5" H_2O, then clean the element.

Panel

1. Confirm control logic is functioning properly and all input and output signals are correct.
2. Verify all safety features every three months per Section X, "System Testing".
3. Inspect all electrical enclosures for any apparent corrosion or moisture.
4. Confirm all enclosure and actuator heaters are functioning.
5. Confirm integrity of conduit seals, if applicable.
6. Verify supply power voltage.
7. Verify power to motor starters or variable frequency drive panels.
8. During operation, observe motor current and voltage.
9. Confirm operation of chart recorder or data acquisition device.

Miscellaneous

1. Remove and clean any filter elements or mesh strainers every three months.
2. Monitor differential pressure for the mist elimination element inside the ZMS Moisture Separator. If the value exceeds 5" H_2O, then clean the element.

EXAMPLE

© 2022 JOHN ZINK COMPANY, LLC
Products or systems described within may be protected by one or more U.S. patents.
For a list of relevant patents and trademarks, please see johnzinkhamworthy.com/legal-notices.

3. Annual calibration, as a minimum, is recommended for any analyzer or flow meter.
4. Press the "Hand" button available for any rotating equipment to verify proper operation.
5. Verify sufficient pressure is available from the compressed air or nitrogen source.
6. Inspect any gauges and valves for deterioration.

NOTICE

An enclosure heater is installed in the Flare Control Panel, PNL-101, to prevent internal corrosion. Individual electric motors may contain integral heaters also to prevent internal corrosion. Ensure all heaters are connected to a reliable power supply and operated continuously, especially during outside storage or when operation is discontinued for an extended duration. Consult wiring diagrams in Section XIII, "Reference Drawings" for additional details.

EXAMPLE

© 2022 JOHN ZINK COMPANY, LLC
Products or systems described within may be protected by one or more U.S. patents.
For a list of relevant patents and trademarks, please see johnzinkhamworthy.com/legal-notices.