BIOENERGY DEVELOPMENT GROUP, LLC
FINAL SITE PLANS

BLADES, SUSSEX COUNTY, DELAWARE

SITE CONSTRUCTION NOTES:

1. TAX MAP: 132-6.00-88.01, 132-6.00-95.00, 132-11.00-41.00, 132-11.00-41.02
2. ZONING: AR-1
3. WATER SERVICE: EXISTING PRIVATE WELL
4. TOPOGRAPHIC AND BOUNDARY SURVEY PERFORMED BY THE PELSA COMPANY, DATED JUNE 26, 2020.
5. FLOOD ZONE DESIGNATION: SUBJECT PROPERTY IS LOCATED IN FLOOD ZONE X AND HAS BEEN DETERMINED TO BE OUTSIDE OF THE 100 YEAR FLOODPLAIN PER FIRM MAP NO.10005C0401 K, PANEL NO. 401 OF 660, DATED MARCH 16, 2015.
6. PROTECTION OF BURIED UTILITIES: ONCE PERMITTED CONSTRUCTION, THE CONTRACTOR SHALL BE REQUIRED TO NOTIFY MISS UTILITY NO LESS THAN 48 HOURS PRIOR TO STARTING WORK (1-800-282-8555).
7. FIELD ADJUSTMENTS MAY BE NECESSARY FOR THE PROPOSED WORK WITH ANY SIGNIFICANT DISCREPANCY (IES), CONTACT ENGINEER FOR APPROPRIATE ACTION.
8. ALL SANITARY SEWER MAIN(S) CONSTRUCTION SHALL CONFORM WITH SUSSEX COUNTY SEWER SPECIFICATIONS.
9. EXISTING UTILITIES AND OTHER PHYSICAL FEATURES ARE SHOWN FOR THE CONVENIENCE OF THE CONTRACTOR AND ARE NOT WARRANTED COMPLETE OR ACCURATE. CONTRACTOR SHALL VERIFY THE EXISTENCE AND LOCATION OF THE SAME TO HIS OWN SATISFACTION.
10. ALL ROAD AND BACKFILL MATERIALS AND CONSTRUCTION METHODS SHALL CONFORM WITH DELDOT STANDARD SPECIFICATIONS AND DETAILS EXCEPT WHERE OTHERWISE NOTED OR SPECIFIED.
11. CONTRACTOR SHALL EXERCISE EVERY PRECAUTION TO AVOID DAMAGE TO EXISTING UTILITIES. COST OF REPAIRS TO ANY UTILITY DAMAGE AS A RESULT OF CONTRACTOR'S OPERATIONS SHALL BE ASSUMED ENTIRELY BY THE CONTRACTOR.
12. ALL EXISTING PAVING, RUBBLE, OTHER DEMOLITION DEBRIS AND UNSUITABLE MATERIAL WITHIN THE LIMITS OF CONSTRUCTION SHALL BE COMPLETELY REMOVED AND DISPOSED OF OFF SITE. EXISTING PAVING SHALL BE SAWCUT TO FULL DEPTH AND TACK COAT APPLIED PRIOR TO NEW PAVING CONSTRUCTION.
13. IT WILL BE THE RESPONSIBLITY OF THE DEVELOPER TO OBTAIN A GRADING PERMIT PRIOR TO ANY GRADING OPERATION ON THIS PROJECT.
14. WHERE REQUIRED BY ENCOUNTERED SPRINGS OR OTHER SEEPAGE CONDITIONS, UNDERDRAIN LINES SHALL BE INSTALLED USING 6-INCH DIAMETER PERFORATED UNDERDRAIN PIPE MEETING STATE AND LOCAL STANDARD SPECIFICATIONS.
15. THE CONTRACTOR IS RESPONSIBLE FOR REPAIR OF ALL CURBS, PAVING, SIDEWALK, UTILITIES AND LAWN DISTURBED DURING CONSTRUCTION.
16. CONTRACTOR SHALL COORDINATE WITH LOCAL UTILITY COMPANIES TO SCHEDULE POLE/UTILITY RELOCATIONS AND INSTALLATIONS OF UTILITIES.
17. THE CONTRACTOR SHALL APPLY FOR AND OBTAIN A DEWATERING PERMIT FROM THE DNREC WELL PERMITS BRANCH OF THE WATER SUPPLY SECTION (302-739-9944).

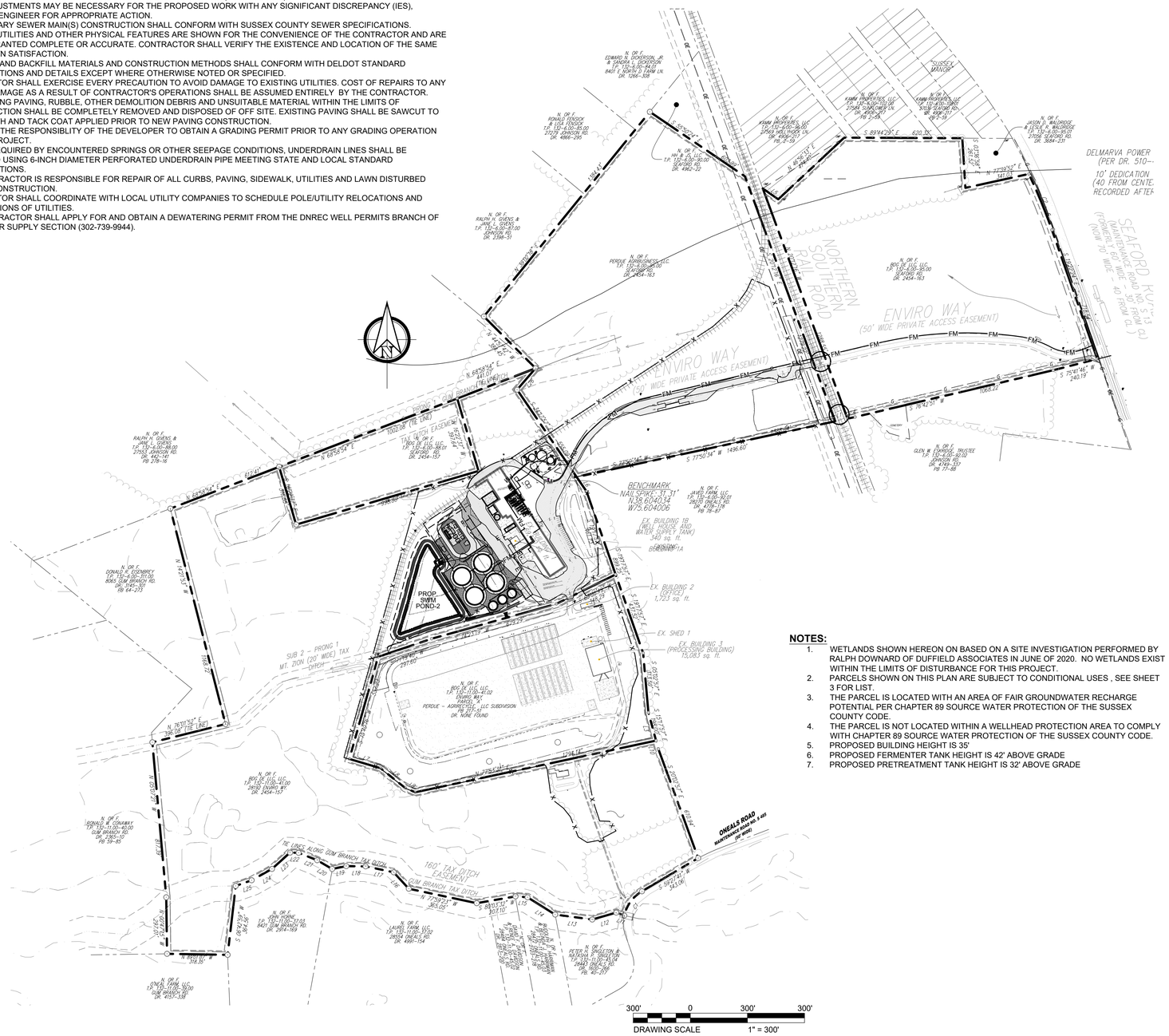

NOTES:

1. WETLANDS SHOWN HEREON ON BASED ON A SITE INVESTIGATION PERFORMED BY RALPH DOWNARD OF DUFFIELD ASSOCIATES IN JUNE OF 2020. NO WETLANDS EXIST WITHIN THE LIMITS OF DISTURBANCE FOR THIS PROJECT.
2. PARCELS SHOWN ON THIS PLAN ARE SUBJECT TO CONDITIONAL USES , SEE SHEET 3 FOR LIST.
3. THE PARCEL IS LOCATED WITH AN AREA OF FAIR GROUNDWATER RECHARGE POTENTIAL PER CHAPTER 89 SOURCE WATER PROTECTION OF THE SUSSEX COUNTY CODE.
4. THE PARCEL IS NOT LOCATED WITHIN A WELLHEAD PROTECTION AREA TO COMPLY WITH CHAPTER 89 SOURCE WATER PROTECTION OF THE SUSSEX COUNTY CODE.
5. PROPOSED BUILDING HEIGHT IS 35'
6. PROPOSED FERMENTER TANK HEIGHT IS 42' ABOVE GRADE
7. PROPOSED PRETREATMENT TANK HEIGHT IS 32' ABOVE GRADE

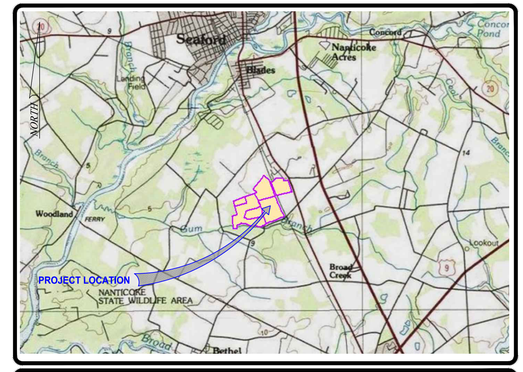

MAP: USGS — **LOCATION MAP** — SCALE: 1" = 6000'

GENERAL NOTE						
1. Tax Parcel No.		132-6.00-88.01	132-6.00-95.00	132-11.00-41.00	132-11.00-41.02	
2. Source of Title		DR. 2454-157	DR. 2454-163	DR. 2454-157	SEPARATE DEED NOT RECORDED	
3. Supporting Documents:					REFER TO PB 220-49	
4. Parcel Address		OFF ENVIRO WAY SEAFORD, DE 19973	SEAFORD ROAD SEAFORD, DE 19973	28338 ENVIRO WAY SEAFORD, DE 19973	ENVIRO WAY SEAFORD, DE 19973	
5. Zoning:	SUSSEX COUNTY:	DELAWARE				
	Zoned:	AR-1	AR-1	AR-1	AR-1	
	Lot Area (Septic)	32,670 SQ. FT.	32,670 SQ. FT.	32,670 SQ. FT.	32,670 SQ. FT.	
	Lot Width (Septic)	100' (150' FRONTING ROAD)	100' (150' FRONTING ROAD)	100' (150' FRONTING ROAD)	100' (150' FRONTING ROAD)	
	Lot Depth (Septic)	100'	100'	100'	100'	
	Front Yard:	40'	40'	40'	40'	
	Side Yard:	15'	15'	15'	15'	
	Rear Yard:	20'	20'	20'	20'	
	Lot Width Minmum:	100' (150' FRONTING ROAD)	100' (150' FRONTING ROAD)	100' (150' FRONTING ROAD)	100' (150' FRONTING ROAD)	
	Height Maximum:	42'	42'	42'	42'	
	Landscape Buffer:	20'	20'	20'	20'	
		A ZONING CERTIFICATION LETTER OR REPORT WAS NOT RECEIVED FOR THIS SURVEY. THE ZONING SHOWN HEREON IS FROM A CURSORY REVIEW OF THE ZONING CODE OF SUSSEX COUNTY, DELAWARE, CHAPTER 115, ARTICLE IV, SECTION 115-25 (AS OF JULY 25, 2019). NOTE: IT IS STRONGLY ADVISED TO CONTACT THE JURISDICTIONAL CONTROLLING AUTHORITIES FOR UP TO DATE INFORMATION, INTERPRETATIONS AND VERIFICATION OF THE MOST RECENT ZONING CODE, ASSOCIATED REGULATIONS AND RECENTLY PROPOSED ORDINANCES.				
						TOTAL
6. Areas:	Site	435,600+/-SF (10.00+/-AC)	3,956,990.40+/-SF (90.84+/-AC)	4,253,198.40+/-SF (97.64+/-AC)	1,159,567.20+/-SF (26.62+/-AC)	9,805,356.0+/-SF (225.10+/-AC)
	Existing					
	Buildings			BLDG 1: 69,120 +/- SF BLDG 1A: 1,602 +/- SF	BLDG 2: 1,723 +/- SF BLDG 3: 15,083 +/- SF	87,528 +/- SF (2.01+/-AC)
	Stormwater Mgmt.			72,831 +/- SF (1.67+/-AC)	182,513 +/- SF (4.18+/-AC)	255,344 +/- SF (5.85+/-AC)
	Open Space	435,600+/-SF (10.00+/-AC)	3,869,187.15+/-SF (88.82+/-AC)	4,067,244.54+/-SF (93.37+/-AC)	363,695.45+/-SF (8.35+/-AC)	8,735,727.14+/-SF (200.54+/-AC)
	Other Impervious		87,803.25+/-SF (2.02+/-AC)	42,400.86+/-SF (0.97+/-AC)	596,552.75+/-SF (13.69+/-AC)	726,756.86+/-SF (16.68+/-AC)
	Proposed					
	Buildings	MAINT/STORAGE BLDG:3,500 SF ELECTRICAL EQUIPMENT TECHNICAL CONTAINER: 335 SF FILL STATION (BIO REACTOR AREA): 170 SF				4,005 SF (0.10+/-AC)
	Stormwater Mgmt.			60,136.48+/- SF (1.38+/-AC)	182,513 +/- SF (4.18+/-AC)	242,649.46+/- SF (5.57+/-AC)
	Open Space	435,600+/-SF (10.00+/-AC)	3,965,835.72+/-SF (91.04+/-AC)	3,965,835.72+/-SF (91.04+/-AC)	363,695.45+/-SF (8.35+/-AC)	8,634,318.32+/-SF (198.22+/-AC)
	Other Impervious		87,803.25+/-SF (2.02+/-AC)	162,891.22+/-SF (3.74+/-AC)	596,552.75+/-SF (13.69+/-AC)	847,247.22+/-SF (19.45+/-AC)
7. Parking Data:	Existing Spaces					15 (INCL. 1 ADA SP.)
	Proposed Spaces	3,670 +/- SF GFA @ 1 PARKING SPACE / 200 SF GFA				837/394 22/43560
						33 SPACES TOTAL
		THE EXISTING PARKING SPACE COUNT REFERS TO MARKED SPACES ONLY. THE SITE HAS SIGNIFICANT AREAS OF PAVEMENT CONSISTING OF GRAVEL, ASPHALT AND DIRT THAT COULD BE USED FOR PARKING.				
8. Total Disturbed Area:	394,722.12+/-SF (9.06+/-AC)					
9. Flood Zone Designations:		FLOOD ZONE DESIGNATION: SUBJECT PROPERTY IS LOCATED IN FLOOD ZONE X (UNSHADED) AND HAS BEEN DETERMINED TO BE OUTSIDE OF THE 100 YEAR FLOODPLAIN PER FIRM MAP NO.10005C0401 K, PANEL NO. 401 OF 660, DATED MARCH 16, 2015.(REVISED)				
10. Record Plans:		NONE	NONE	NONE	PB 217-49	
		A PORTION OF THIS PROPERTY IS SHOWN ON THE RECORD MINOR SUBDIVISION PLAN TITLED: "SUBDIVISION OF THE LANDS OF PERDUE - AGRIRECYCLE, LLC", IN PLAT BOOK 217, PAGE 49, DATED JULY 17, 2015.				
11. Utilities:		COMCAST: No Response VERIZON: No Response DELMARVA POWER UTILIQUEST: No Response CHESAPEAKE UTILITIES: Response Received. Utilities Exhibit Provided and plotted. CROWN CASTLE: No Response PLEASE NOTE THAT OTHER UTILITIES, NOT READILY VISIBLE, NOT SHOWN ON THE PLANS OR UTILITIES PLACED BY THIRD PARTY AGENTS, MAY BE PRESENT.				
12. Vertical Datum:		NAVD 88 NAVD				
13. Bearing Reference:		NAD 83, DELAWARE STATE PLANE				
14. Owner Data:		BIOENRGY DEVELOPMENT GROUP, LLC 9250 BENDIX ROAD COLUMBIA, MD 21045				
15. Water Service:		EXISTING PRIVATE WELL				
16. Sewer Service:		EXISTING SEPTIC TO BE ABANDONED. PROPOSED PUBLIC SYSTEM (NEW SUSSEX COUNTY DISTRICT)				

SHEET LIST

BIC-0000-C001	INDEX SHEET
BIC-0000-C002	EXISTING CONDITIONS/DEMOLITION PLAN
BIC-0000-C003	OVERALL SITE PLAN
BIC-0000-C004	SITE PLAN
BIC-0000-C005	SITE PLAN
BIC-0000-C006	SITE PLAN

ABBREVIATIONS:

ADJ	ADJOINER
BLDG	BUILDING
C.L.F.	CHAIN LINK FENCE
COH	CHIMNEY OVERHANG
CONC	CONCRETE
DH	DRILLHOLE
FOH	FLOOR OVERHANG
IP	IRON PIPE/PIN
MON	MONUMENT
PL	PROPERTY LINE
POB	POINT OF BEGINNING
ROH	ROOF OVERHANG
R/W	RIGHT-OF-WAY
WOH	WINDOW OVERHANG
MEG	MATCH EXISTING GRADE

EXISTING LEGEND

PROPERTY LINE
ADJOINER PROPERTY LINE
CONTOUR (26)
SPOT ELEVATION (× 26.23)
EASEMENT
GAS LINE
FORCE MAIN
WATER LINE
ASPHALT
CONCRETE
GRAVEL
RAIL ROAD
TREELINE

PROPOSED LEGEND

PROPOSED FENCE
PROPOSED EASEMENT
PROPOSED CONTOUR (29)
PROPOSED FORCE MAIN
PROPOSED WATER
PROPOSED GAS
PROPOSED SANITARY SEWER
PROPOSED STORM DRAIN
PROPOSED ELECTRIC
4" HEAVY DUTY ASPHALT OVERLAY
FULL DEPTH HEAVY DUTY ASPHALT
PROPOSED GABC
PROPOSED CONCRETE
LIMIT OF DISTURBANCE (LOD)
PROPOSED SPOT ELEVATION (30.25)
MATCH EXISTING GRADE (MEG)

DUFFIELD ASSOCIATES
Soil, Water & the Environment
5400 LIMESTONE ROAD
WILMINGTON, DE 19808-1232
TEL: 302.239.6634
FAX: 302.239.8485
OFFICES IN DELAWARE, MARYLAND, PENNSYLVANIA AND NEW JERSEY
WEB: HTTP://DUFFNET.COM
E-MAIL: DUFFIELD@DUFFNET.COM

CHECKED BY:	SJG
DESIGNED BY:	SCH/JJL
DRAWN BY:	SMC/JJL
FILE NAME:	0642012SCF-bdes

No.	REVISION	CHKD BY	DATE
1	DNREC WASTEWATER REVIEW COMMENTS	SGH	7/27/2022

OWNER: BIOENERGY DEVELOPMENT GROUP, LLC
9250 BENDIX ROAD
COLUMBIA, MD 21045

INDEX SHEET
FINAL SITE PLAN
BIOENERGY DEVELOPMENT GROUP, LLC
SUSSEX COUNTY ~ DELAWARE

DATE:	3 MAY 2021
SCALE:	AS SHOWN
PROJECT NO.	12393.CF
SHEET:	BIC-0000-C001

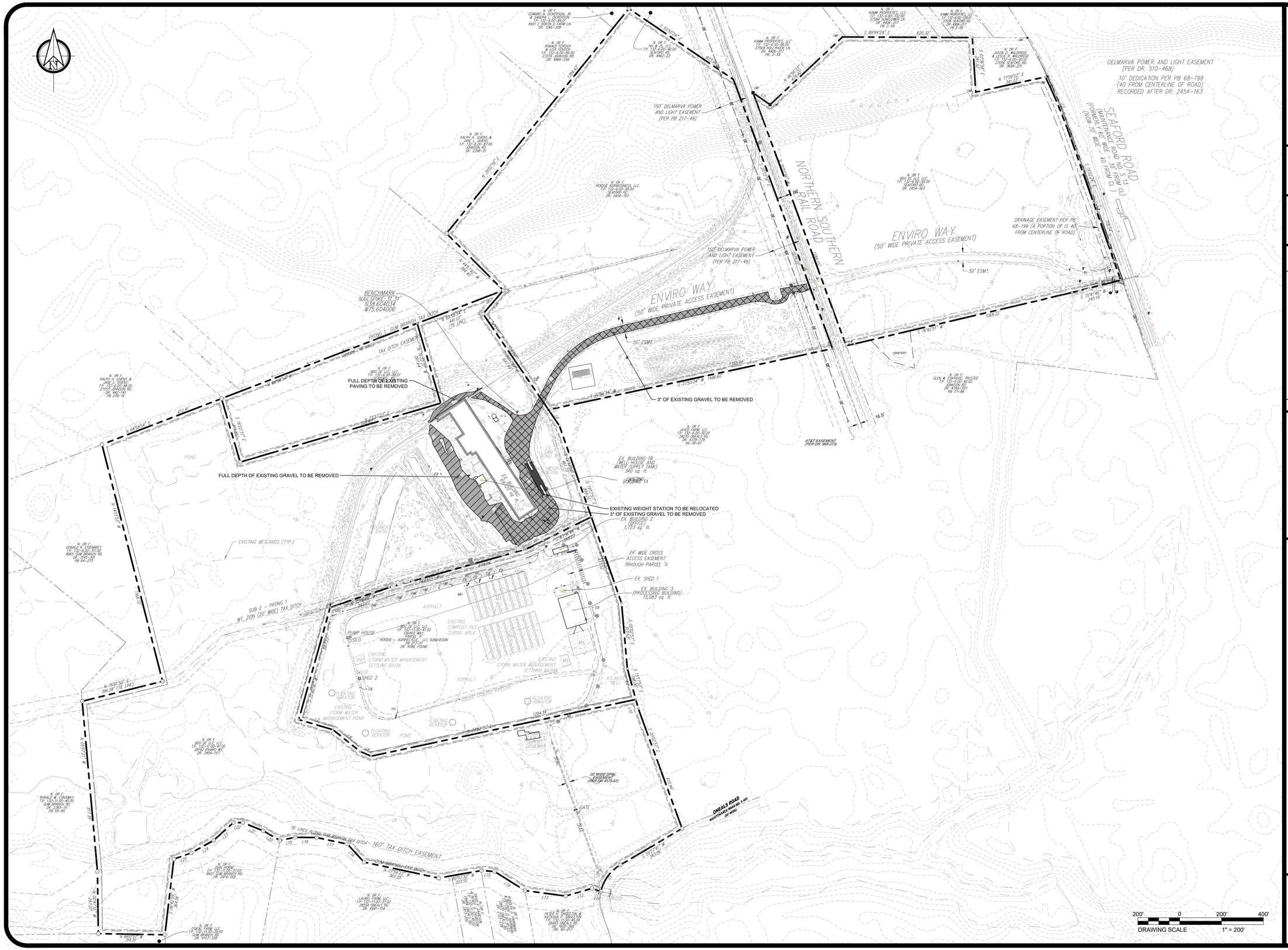

DUFFIELD ASSOCIATES
Soil, Water & the Environment

5400 LIMESTONE ROAD
WILMINGTON, DE 19808-1232
TEL: 302.239.6634
FAX: 302.239.8485

OFFICES IN DELAWARE, MARYLAND, PENNSYLVANIA AND NEW JERSEY
WEB: HTTP://DUFFNET.COM
E-MAIL: DUFFIELD@DUFFNET.COM

CHECKED BY:	SIG
DESIGNED BY:	SCH/JJL
DRAWN BY:	SMC/JJL
FILE NAME:	02A012FKCF-Exist2.dwg

No.	REVISION	CHKD BY	DATE
-	DNREC WASTEWATER REVIEW COMMENTS	SGH	7/27/2021

OWNER: BIOENERGY DEVELOPMENT GROUP, LLC
9250 BENDIX ROAD
COLUMBIA, MD 21045

EXISTING CONDITIONS / DEMOLITION PLAN

FINAL SITE PLAN

BIOENERGY DEVELOPMENT GROUP, LLC

SUSSEX COUNTY ~ DELAWARE

DATE:	3 MAY 2021
SCALE:	1" = 200'
PROJECT NO.	12393.CF
SHEET:	BIC-0000-C002

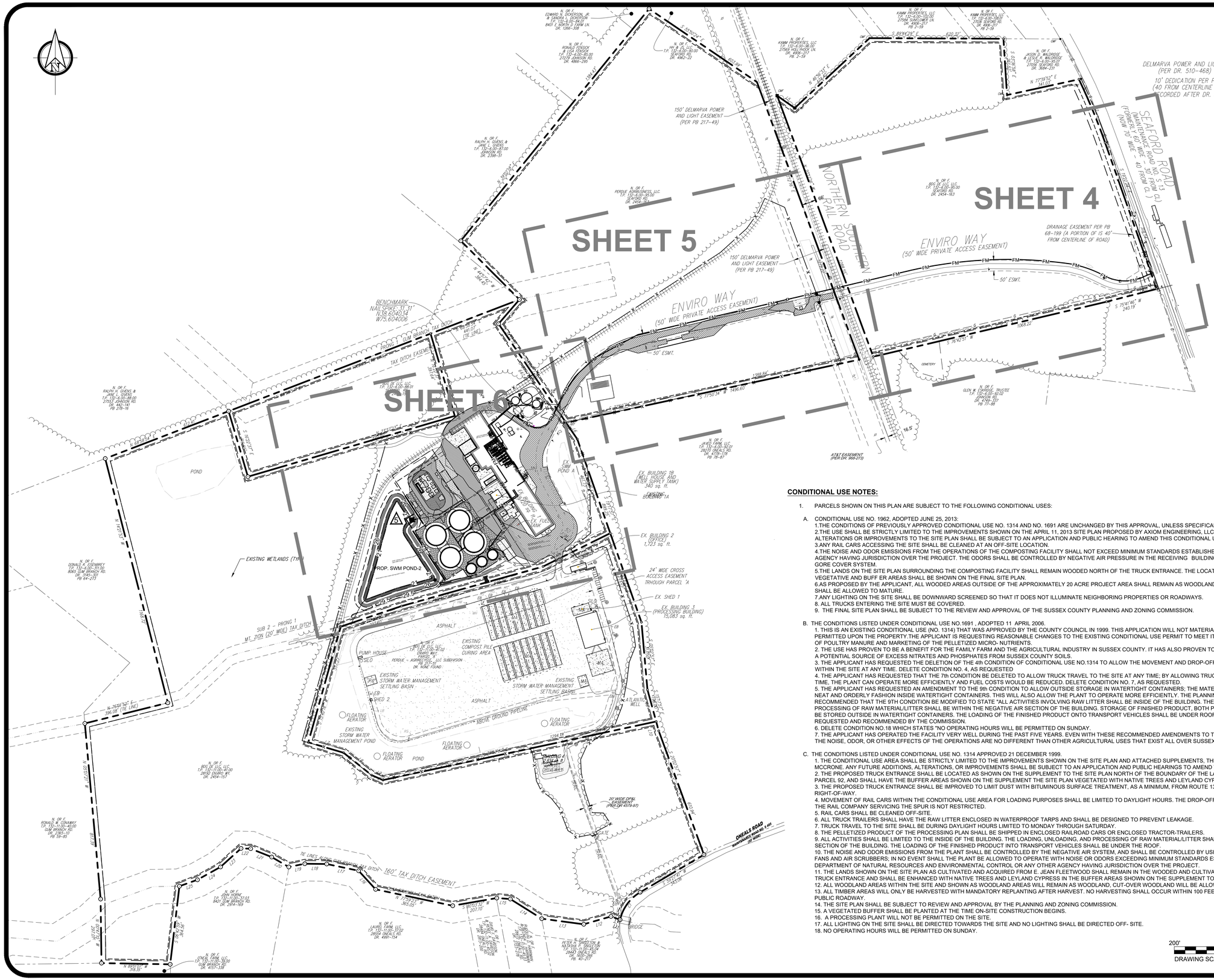

CONDITIONAL USE NOTES:

1. PARCELS SHOWN ON THIS PLAN ARE SUBJECT TO THE FOLLOWING CONDITIONAL USES:

A. CONDITIONAL USE NO. 1962, ADOPTED JUNE 25, 2013:
1.THE CONDITIONS OF PREVIOUSLY APPROVED CONDITIONAL USE NO. 1314 AND NO. 1691 ARE UNCHANGED BY THIS APPROVAL, UNLESS SPECIFICALLY MODIFIED HEREIN.
2.THE USE SHALL BE STRICTLY LIMITED TO THE IMPROVEMENTS SHOWN ON THE APRIL 11, 2013 SITE PLAN PROPOSED BY AXIOM ENGINEERING, LLC. ANY FUTURE ADDITIONS, ALTERATIONS OR IMPROVEMENTS TO THE SITE PLAN SHALL BE SUBJECT TO AN APPLICATION AND PUBLIC HEARING TO AMEND THIS CONDITIONAL USE.
3.ANY RAIL CARS ACCESSING THE SITE SHALL BE CLEANED AT AN OFF-SITE LOCATION.
4.THE NOISE AND ODOR EMISSIONS FROM THE OPERATIONS OF THE COMPOSTING FACILITY SHALL NOT EXCEED MINIMUM STANDARDS ESTABLISHED BY DNREC OR ANY OTHER AGENCY HAVING JURISDICTION OVER THE PROJECT. THE ODORS SHALL BE CONTROLLED BY NEGATIVE AIR PRESSURE IN THE RECEIVING BUILDING, A BIO-FILTER, AND BY THE GORE COVER SYSTEM.
5.THE LANDS ON THE SITE PLAN SURROUNDING THE COMPOSTING FACILITY SHALL REMAIN WOODED NORTH OF THE TRUCK ENTRANCE. THE LOCATION OF ALL WOODED, VEGETATIVE AND BUFF ER AREAS SHALL BE SHOWN ON THE FINAL SITE PLAN.
6.AS PROPOSED BY THE APPLICANT, ALL WOODED AREAS OUTSIDE OF THE APPROXIMATELY 20 ACRE PROJECT AREA SHALL REMAIN AS WOODLANDS. CUT-OVER WOODLANDS SHALL BE ALLOWED TO MATURE.
7.ANY LIGHTING ON THE SITE SHALL BE DOWNWARD SCREENED SO THAT IT DOES NOT ILLUMINATE NEIGHBORING PROPERTIES OR ROADWAYS.
8. ALL TRUCKS ENTERING THE SITE MUST BE COVERED.
9. THE FINAL SITE PLAN SHALL BE SUBJECT TO THE REVIEW AND APPROVAL OF THE SUSSEX COUNTY PLANNING AND ZONING COMMISSION.

B. THE CONDITIONS LISTED UNDER CONDITIONAL USE NO.1691 , ADOPTED 11 APRIL 2006.
1. THIS IS AN EXISTING CONDITIONAL USE (NO. 1314) THAT WAS APPROVED BY THE COUNTY COUNCIL IN 1999. THIS APPLICATION WILL NOT MATERIALLY CHANGE THE USE THAT IS PERMITTED UPON THE PROPERTY.THE APPLICANT IS REQUESTING REASONABLE CHANGES TO THE EXISTING CONDITIONAL USE PERMIT TO MEET ITS NEEDS FOR THE RECYCLING OF POULTRY MANURE AND MARKETING OF THE PELLETIZED MICRO- NUTRIENTS.
2. THE USE HAS PROVEN TO BE A BENEFIT FOR THE FAMILY FARM AND THE AGRICULTURAL INDUSTRY IN SUSSEX COUNTY. IT HAS ALSO PROVEN TO BE A GOOD WAY TO ELIMINATE A POTENTIAL SOURCE OF EXCESS NITRATES AND PHOSPHATES FROM SUSSEX COUNTY SOILS.
3. THE APPLICANT HAS REQUESTED THE DELETION OF THE 4th CONDITION OF CONDITIONAL USE NO.1314 TO ALLOW THE MOVEMENT AND DROP-OFF AND PICK-UP OF RAIL CARS WITHIN THE SITE AT ANY TIME. DELETE CONDITION NO. 4, AS REQUESTED
4. THE APPLICANT HAS REQUESTED THAT THE 7th CONDITION BE DELETED TO ALLOW TRUCK TRAVEL TO THE SITE AT ANY TIME; BY ALLOWING TRUCK TRAVEL TO THE SITE AT ANY TIME, THE PLANT CAN OPERATE MORE EFFICIENTLY AND FUEL COSTS WOULD BE REDUCED. DELETE CONDITION NO. 7, AS REQUESTED.
5. THE APPLICANT HAS REQUESTED AN AMENDMENT TO THE 9th CONDITION TO ALLOW OUTSIDE STORAGE IN WATERTIGHT CONTAINERS; THE MATERIAL WOULD BE STORED IN A NEAT AND ORDERLY FASHION INSIDE WATERTIGHT CONTAINERS. THIS WILL ALSO ALLOW THE PLANT TO OPERATE MORE EFFICIENTLY. THE PLANNING AND ZONING COMMISSION RECOMMENDED THAT THE 9TH CONDITION BE MODIFIED TO STATE "ALL ACTIVITIES INVOLVING RAW LITTER SHALL BE INSIDE OF THE BUILDING. THE LOADING, UNLOADING AND PROCESSING OF RAW MATERIAL/LITTER SHALL BE WITHIN THE NEGATIVE AIR SECTION OF THE BUILDING. STORAGE OF FINISHED PRODUCT, BOTH PELLETS AND GRANULATED, MAY BE STORED OUTSIDE IN WATERTIGHT CONTAINERS. THE LOADING OF THE FINISHED PRODUCT ONTO TRANSPORT VEHICLES SHALL BE UNDER ROOF." AMEND CONDITION NO. 9 AS REQUESTED AND RECOMMENDED BY THE COMMISSION.
6. DELETE CONDITION NO.18 WHICH STATES "NO OPERATING HOURS WILL BE PERMITTED ON SUNDAY.
7. THE APPLICANT HAS OPERATED THE FACILITY VERY WELL DURING THE PAST FIVE YEARS. EVEN WITH THESE RECOMMENDED AMENDMENTS TO THE EXISTING CONDITIONAL USE, THE NOISE, ODOR, OR OTHER EFFECTS OF THE OPERATIONS ARE NO DIFFERENT THAN OTHER AGRICULTURAL USES THAT EXIST ALL OVER SUSSEX COUNTY.

C. THE CONDITIONS LISTED UNDER CONDITIONAL USE NO. 1314 APPROVED 21 DECEMBER 1999.
1. THE CONDITIONAL USE AREA SHALL BE STRICTLY LIMITED TO THE IMPROVEMENTS SHOWN ON THE SITE PLAN AND ATTACHED SUPPLEMENTS, THE SITE PLAN PREPARED BY MCCRONE. ANY FUTURE ADDITIONS, ALTERATIONS, OR IMPROVEMENTS SHALL BE SUBJECT TO AN APPLICATION AND PUBLIC HEARINGS TO AMEND THIS CONDITIONAL USE.
2. THE PROPOSED TRUCK ENTRANCE SHALL BE LOCATED AS SHOWN ON THE SUPPLEMENT TO THE SITE PLAN NORTH OF THE BOUNDARY OF THE LANDS OF VICTOR E. MOORE, PARCEL 92, AND SHALL HAVE THE BUFFER AREAS SHOWN ON THE SUPPLEMENT THE SITE PLAN VEGETATED WITH NATIVE TREES AND LEYLAND CYPRESS.
3. THE PROPOSED TRUCK ENTRANCE SHALL BE IMPROVED TO LIMIT DUST WITH BITUMINOUS SURFACE TREATMENT, AS A MINIMUM, FROM ROUTE 13A BACK TO THE RAILROAD RIGHT-OF-WAY.
4. MOVEMENT OF RAIL CARS WITHIN THE CONDITIONAL USE AREA FOR LOADING PURPOSES SHALL BE LIMITED TO DAYLIGHT HOURS. THE DROP-OFF AND PICK-UP OF RAIL CARS BY THE RAIL COMPANY SERVICING THE SPUR IS NOT RESTRICTED.
5. RAIL CARS SHALL BE CLEANED OFF-SITE.
6. ALL TRUCK TRAILERS SHALL HAVE THE RAW LITTER ENCLOSED IN WATERPROOF TARPS AND SHALL BE DESIGNED TO PREVENT LEAKAGE.
7. TRUCK TRAVEL TO THE SITE SHALL BE DURING DAYLIGHT HOURS LIMITED TO MONDAY THROUGH SATURDAY.
8. THE PELLETIZED PRODUCT OF THE PROCESSING PLAN SHALL BE SHIPPED IN ENCLOSED RAILROAD CARS OR ENCLOSED TRACTOR-TRAILERS.
9. ALL ACTIVITIES SHALL BE LIMITED TO THE INSIDE OF THE BUILDING. THE LOADING, UNLOADING, AND PROCESSING OF RAW MATERIAL/LITTER SHALL BE WITHIN THE NEGATIVE AIR SECTION OF THE BUILDING. THE LOADING OF THE FINISHED PRODUCT INTO TRANSPORT VEHICLES SHALL BE UNDER THE ROOF.
10. THE NOISE AND ODOR EMISSIONS FROM THE PLANT SHALL BE CONTROLLED BY THE NEGATIVE AIR SYSTEM, AND SHALL BE CONTROLLED BY USING BAG HOUSES, CYCLONE FANS AND AIR SCRUBBERS; IN NO EVENT SHALL THE PLANT BE ALLOWED TO OPERATE WITH NOISE OR ODORS EXCEEDING MINIMUM STANDARDS ESTABLISHED BY THE DEPARTMENT OF NATURAL RESOURCES AND ENVIRONMENTAL CONTROL OR ANY OTHER AGENCY HAVING JURISDICTION OVER THE PROJECT.
11. THE LANDS SHOWN ON THE SITE PLAN AS CULTIVATED AND ACQUIRED FROM E. JEAN FLEETWOOD SHALL REMAIN IN THE WOODED AND CULTIVATED STATE NORTH OF THE TRUCK ENTRANCE AND SHALL BE ENHANCED WITH NATIVE TREES AND LEYLAND CYPRESS IN THE BUFFER AREAS SHOWN ON THE SUPPLEMENT TO THE SITE PLAN.
12. ALL WOODLAND AREAS WITHIN THE SITE AND SHOWN AS WOODLAND AREAS WILL REMAIN AS WOODLAND, CUT-OVER WOODLAND WILL BE ALLOWED TO MATURE.
13. ALL TIMBER AREAS WILL ONLY BE HARVESTED WITH MANDATORY REPLANTING AFTER HARVEST. NO HARVESTING SHALL OCCUR WITHIN 100 FEET OF A PROPERTY LINE OR PUBLIC ROADWAY.
14. THE SITE PLAN SHALL BE SUBJECT TO REVIEW AND APPROVAL BY THE PLANNING AND ZONING COMMISSION.
15. A VEGETATED BUFFER SHALL BE PLANTED AT THE TIME ON-SITE CONSTRUCTION BEGINS.
16. A PROCESSING PLANT WILL NOT BE PERMITTED ON THE SITE.
17. ALL LIGHTING ON THE SITE SHALL BE DIRECTED TOWARDS THE SITE AND NO LIGHTING SHALL BE DIRECTED OFF- SITE.
18. NO OPERATING HOURS WILL BE PERMITTED ON SUNDAY.

200' 0 200' 400'
DRAWING SCALE 1" = 200'

DUFFIELD ASSOCIATES
Soil, Water & the Environment
5400 LIMESTONE ROAD
WILMINGTON, DE 19808-1232
TEL: 302.239.6634
FAX: 302.239.8485
OFFICES IN DELAWARE, MARYLAND, PENNSYLVANIA AND NEW JERSEY
WEB: HTTP://DUFFNET.COM
E-MAIL: DUFFIELD@DUFFNET.COM

DESIGNED BY:	CHECKED BY:
SCH/JJL	SJG
DRAWN BY:	FILE NAME:
SMC/JJL	0.04-0122BIC-Site.dwg

No.	REVISION	CHKD BY	DATE
2	CHESAPEAKE UTILITY SITE REVISIONS	SJG	7/27/2021
3	CHESAPEAKE UTILITY SITE REVISIONS	SJG	8/17/2021
4	CHESAPEAKE UTILITY SITE REVISIONS	SJG	9/9/2021
5	DNREC WASTEWATER REVIEW COMMENTS	SCH	4/28/2021
			7/27/2022

OWNER: BIOENERGY DEVELOPMENT GROUP, LLC
9250 BENDIX ROAD
COLUMBIA, MD 21045

OVERALL SITE PLAN
FINAL SITE PLAN
BIOENERGY DEVELOPMENT GROUP, LLC
SUSSEX COUNTY ~ DELAWARE

DATE:	3 MAY 2021
SCALE:	1" = 200'
PROJECT NO.	12393.CF
SHEET:	BIC-0000-C003

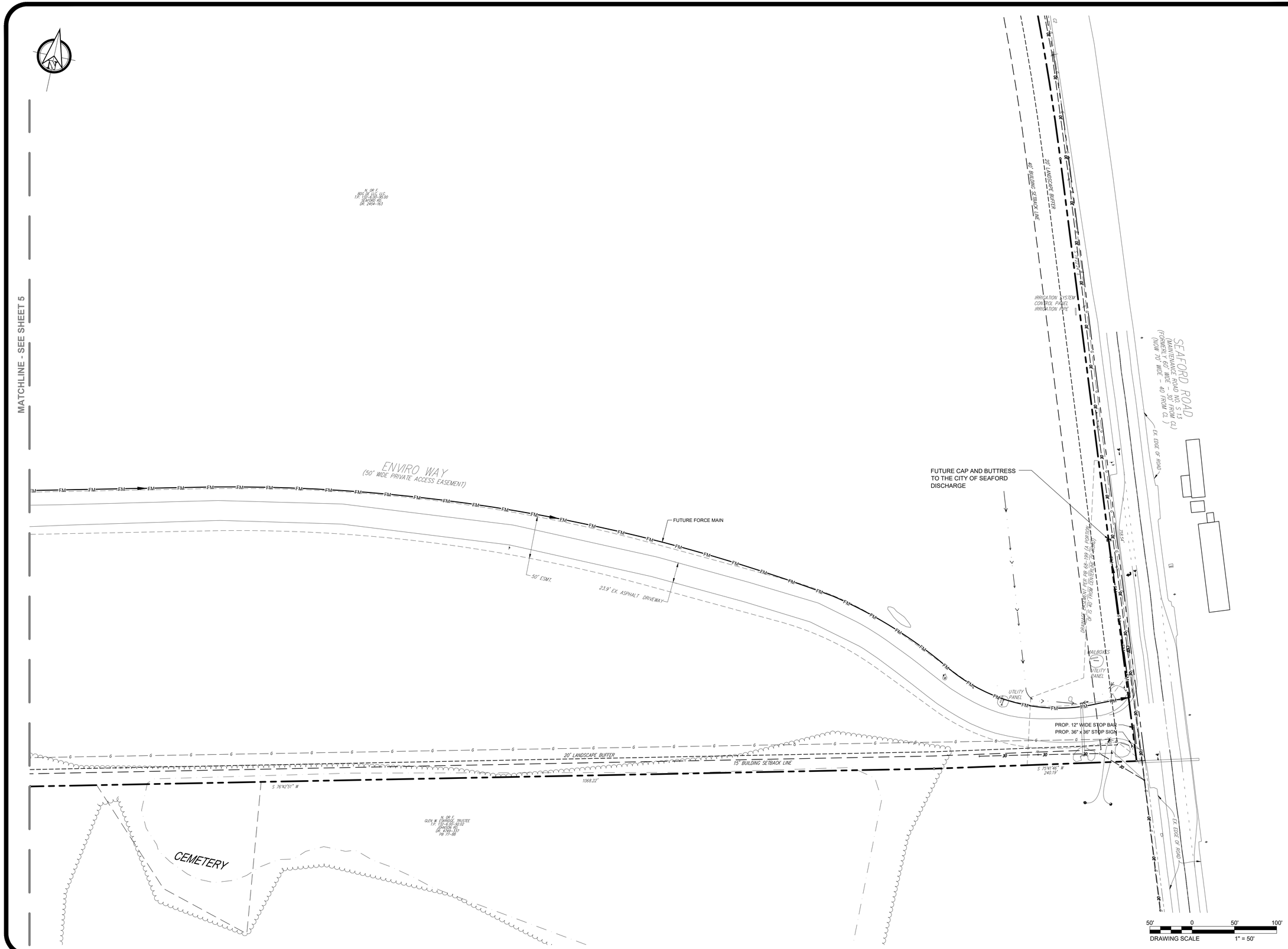

DUFFIELD ASSOCIATES
Soil, Water & the Environment
5400 LIMESTONE ROAD
WILMINGTON, DE 19808-1232
TEL: 302.239.6634
FAX: 302.239.8485
OFFICES IN DELAWARE, MARYLAND, PENNSYLVANIA AND NEW JERSEY
WEB: HTTP://DUFFNET.COM
E-MAIL: DUFFIELD@DUFFNET.COM

DESIGNED BY:	CHECKED BY:
SCH/JJL	SJG
DRAWN BY:	FILE NAME:
SMC/JJL	02-84-01(2393CF-Site Revised)

No.	REVISION	CHK'D BY INITIALS	DATE
1	DNREC WASTEWATER REVIEW COMMENTS	SGH	7/27/2023

OWNER: BIOENERGY DEVELOPMENT GROUP, LLC
9250 BENDIX ROAD
COLUMBIA, MD 21045

SITE PLAN
FINAL SITE PLAN
BIOENERGY DEVELOPMENT GROUP, LLC
SUSSEX COUNTY ~ DELAWARE

DATE:	3 MAY 2021
SCALE:	1" = 50'
PROJECT NO.	12393.CF
SHEET:	BIC-0000-C004

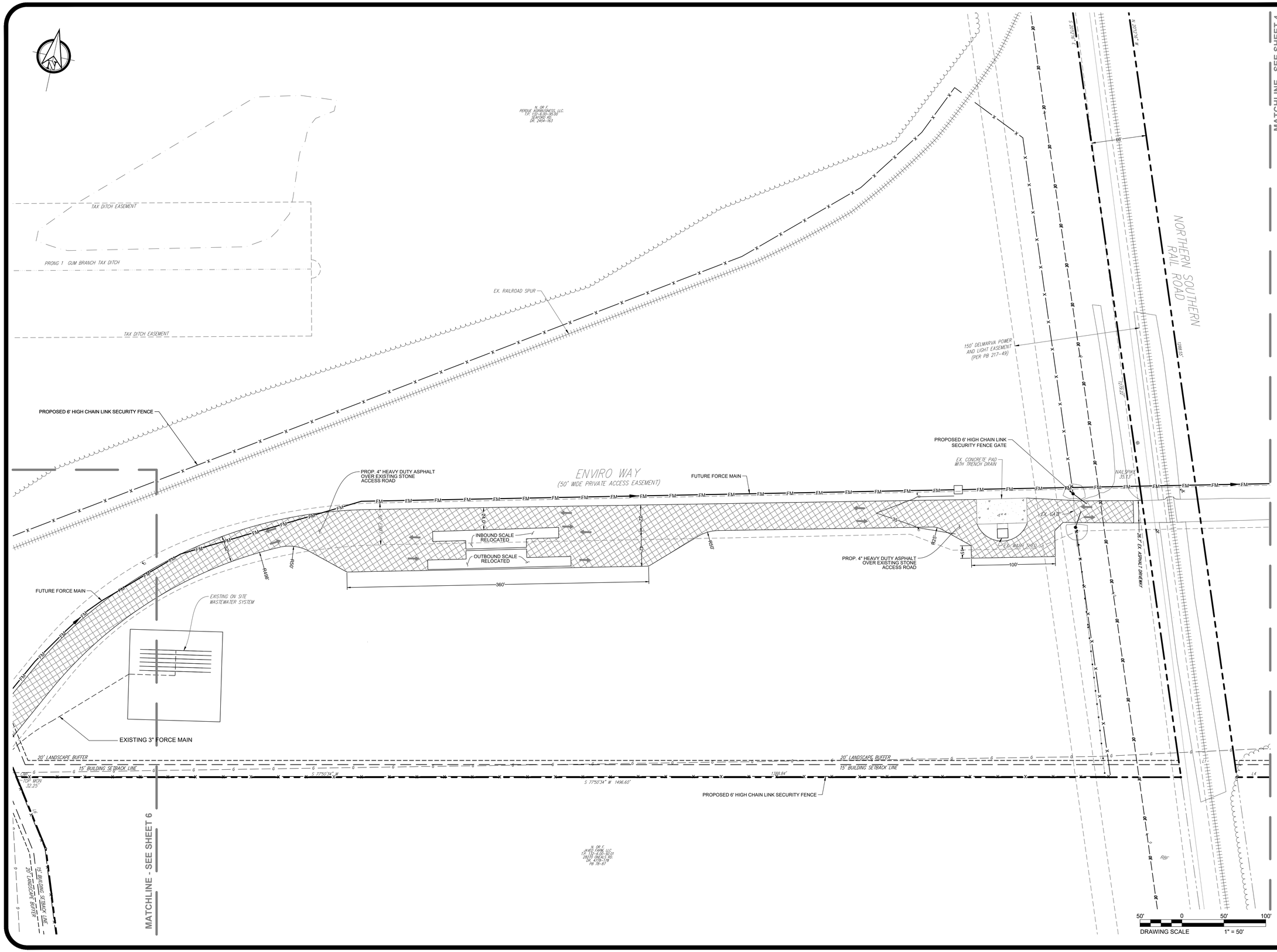

DUFFIELD ASSOCIATES
Soil, Water & the Environment
5400 LIMESTONE ROAD
WILMINGTON, DE 19808-1232
TEL: 302.239.6634
FAX: 302.239.8485
OFFICES IN DELAWARE, MARYLAND, PENNSYLVANIA AND NEW JERSEY
WEB: HTTP://DUFFNET.COM
E-MAIL: DUFFIELD@DUFFNET.COM

CHECKED BY: SJG
FILE NAME: 0246-G12393CF-Site.dwg
DESIGNED BY: SCH/JJL
DRAWN BY: SMC/JJL

No.	REVISION	CHK'D BY	DATE
1	DNREC WASTEWATER REVIEW COMMENTS	SGH	7/27/2023

OWNER: BIOENERGY DEVELOPMENT GROUP, LLC
9250 BENDIX ROAD
COLUMBIA, MD 21045

SITE PLAN
FINAL SITE PLAN
BIOENERGY DEVELOPMENT GROUP, LLC
SUSSEX COUNTY ~ DELAWARE

DATE:	3 MAY 2021
SCALE:	1" = 50'
PROJECT NO.	12393.CF
SHEET:	BIC-0000-C005

1. UNDERGROUND PROCESS PIPE GALLERY - SEE B&L PLAN SHEET P-211, PROCESS PIPE TABLE D, SHEET P-212 AND SECTION D-D, SHEET P-311
2. UNDERGROUND PROCESS PIPE GALLERY - SEE B&L PLAN SHEET P-212, PROCESS PIPE TABLE C, SHEET P-211 AND SECTION C-C, SHEET P-310
3. UNDERGROUND PROCESS PIPE GALLERY - SEE B&L PLAN SHEET P-210, PROCESS PIPE TABLE B, SHEET P-210 AND SECTION B-B, SHEET P-310
4. UNDERGROUND PROCESS PIPE GALLERY - SEE B&L PLAN SHEET P-210 AND P-212, PROCESS PIPE TABLE A, SHEET P-211 AND SECTION A-A, SHEET P-310
5. UNDERGROUND PROCESS PIPE GALLERY AND EQUIPMENT TECHNICAL CONTAINERS, SEE BTS DRAWINGS
6. PROPOSED GAS METERING PAD
7. UNDERGROUND PROCESS PIPING INCLUDING UF FEED, UF RECIRCULATE, HEAT EXCHANGER AND UF FLUSHING AND WASH WATER SEE B&L SHEET P-213
8. 0.198 MILLION GALLON ANOXIC REACTOR BOLTED STAINLESS STEEL TANK, SEE B&L SHEET D101
9. 0.412 MILLION GALLON AEROBIC REACTOR BOLTED STAINLESS STEEL TANK, SEE B&L SHEET D100
10. 0.198 MILLION GALLON UF FEEDING TANK BOLTED STAINLESS STEEL TANK, SEE B&L SHEET D102
11. SEE WASTEWATER TREATMENT IMPROVEMENT DRAWINGS PREPARED BY B&L, SHEET B&L SHEET P-213
12. PRETREATMENT PLANT CHEMICAL STORAGE AREA SEE B&L SHEET C102
13. UF AND RO SYSTEMS SEE B&L SHEET C102
14. UF FEEDING PUMPS IN PREENGINEERED ENCLOSURE SEE B&L SHEET D102
15. ANTIFOAM AND RECIRCULATION PUMPS IN PREENGINEERED ENCLOSURE SEE B&L SHEET D101
16. AEROBIC TANK BLOWERS SEE B&L SHEET D100
17. CENTRATE FEED PUMPS AND SCREENS SEE B&L SHEET C104
18. CHILLERS AND COOLER TOWER SEE B&L SHEET C102
19. 4" EFFLUENT FORCE MAIN TO TRUCK LOAD-OUT PAD
20. 4" CENTRATE FORCE MAIN TO PRETREATMENT SYSTEM
21. GAS TREATMENT AREA
22. 8" FORCE MAIN TO SEPARATOR
23. 6" SLUDGE FORCE MAIN FROM WWTP

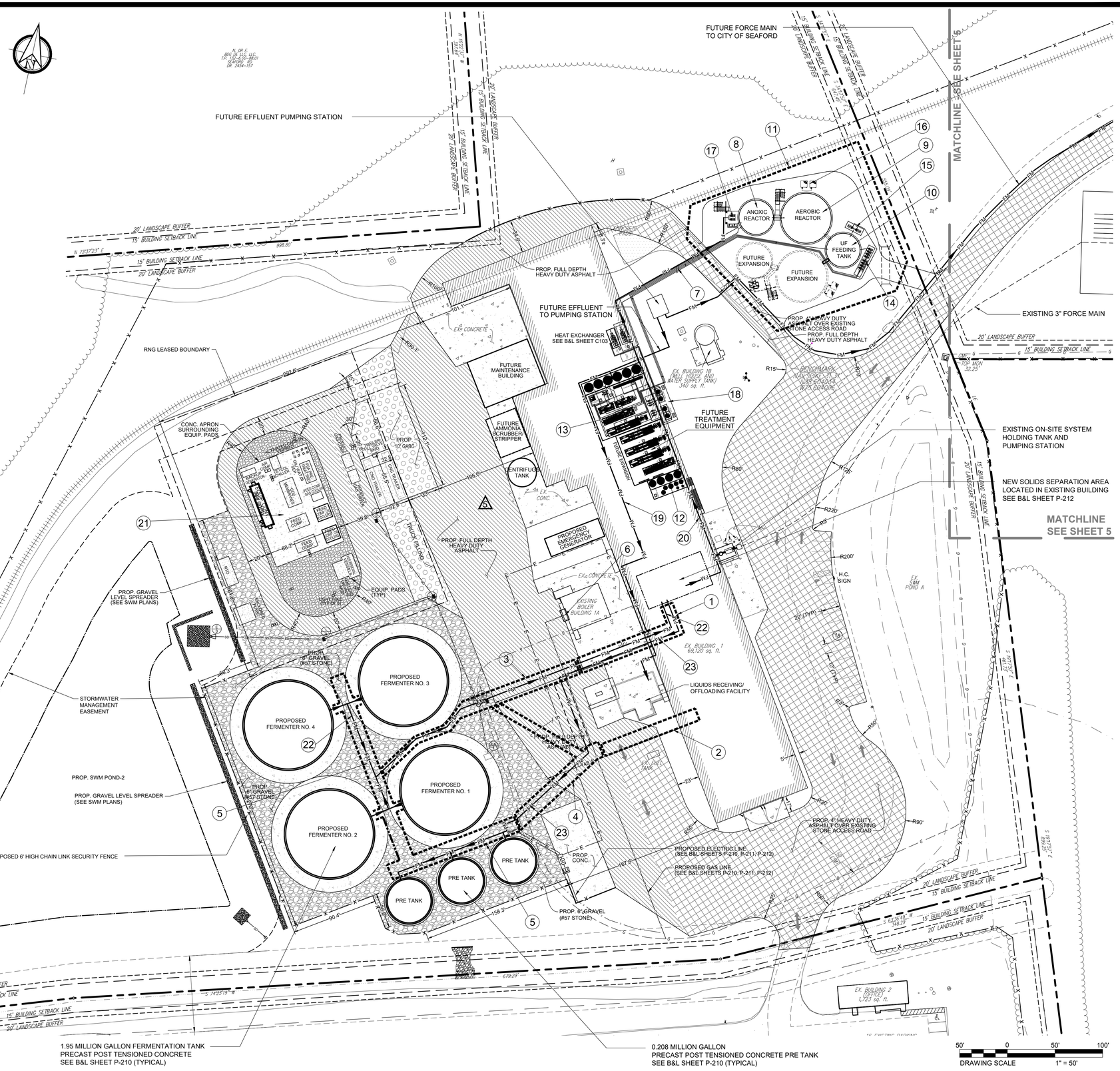

DUFFIELD ASSOCIATES
Soil, Water & the Environment
5400 LIMESTONE ROAD
WILMINGTON, DE 19808-1232
TEL: 302.239.6634
FAX: 302.239.8485
OFFICES IN DELAWARE, MARYLAND, PENNSYLVANIA AND NEW JERSEY
WEB: HTTP://DUFFNET.COM
E-MAIL: DUFFIELD@DUFFNET.COM

CHECKED BY:	SJG
DESIGNED BY:	SCH/JJL
DRAWN BY:	SMC/JJL
FILE NAME:	6484-G12BIC-Site Revised

No.	REVISION	CHKD BY	DATE
2	CHESAPEAKE UTILITY SITE REVISIONS	SJG	7/27/2021
3	CHESAPEAKE UTILITY SITE REVISIONS	SJG	8/17/2021
4	CHESAPEAKE UTILITY SITE REVISIONS	SJG	9/28/2021
5	DNREC WASTEWATER REVIEW COMMENTS	SCH	4/26/2021
6		SCH	7/27/2022

OWNER: BIOENERGY DEVELOPMENT GROUP, LLC
9250 BENDIX ROAD
COLUMBIA, MD 21045

SITE PLAN
FINAL SITE PLAN
BIOENERGY DEVELOPMENT GROUP, LLC
SUSSEX COUNTY ~ DELAWARE

DATE:	3 MAY 2021
SCALE:	1" = 50'
PROJECT NO.	12393.CF
SHEET:	BIC-0000-C006

LEGEND

HOT WATER	HW
DIGESTATE	
BIOGAS	
NAT. GAS	G
WATERLINE	W
PROP CONTOUR	
PROP FORCE MAIN	FM
PROP PIPELINE	
EX BUILDING	

HYDROTECH PACKAGE WASTEWATER TREATMENT SYSTEM

LEGEND

1 Biological feeding	8 UF Permeate Tank	16 Drains tank
2 Screening	9 RO	17 Service water
3 Anoxic Reactor	10 RO Permeate Tank	18 Cooling towers
4 Aerobic Reactor	11 RO Concentrate Tank	19 Antifoam & recirculation pumps
5 UF Feeding Tank	12 NF	20 Heat exchanger
6 UF Feeding Pumps	13 NF Concentrate Tank	21 Blowers
7 UF	14 SC RO	22 Chemicals
	15 SC RO Concentrate Tank	23 Control panels room

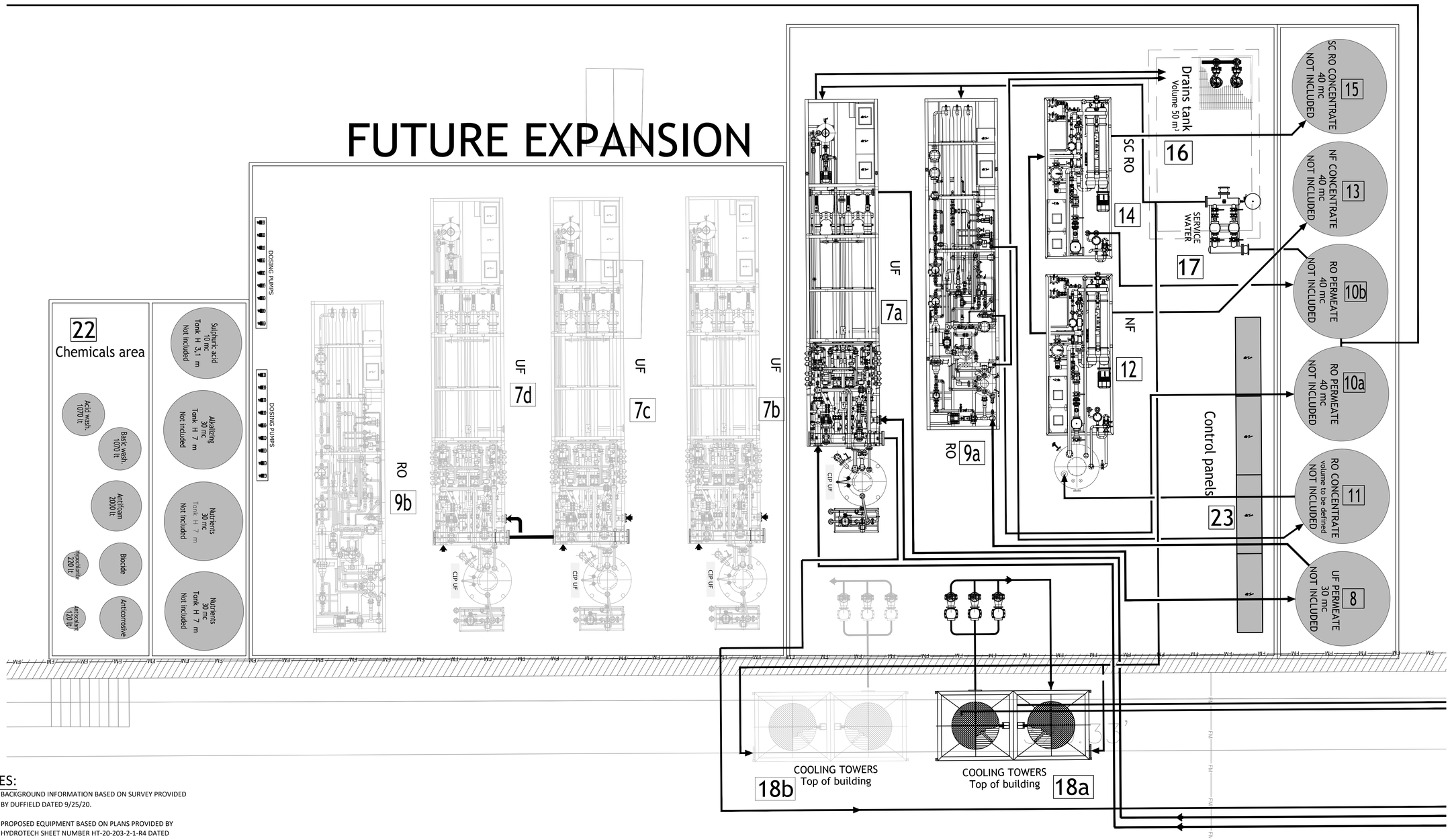

NOTES:

1. BACKGROUND INFORMATION BASED ON SURVEY PROVIDED BY DUFFIELD DATED 9/25/20.
2. PROPOSED EQUIPMENT BASED ON PLANS PROVIDED BY HYDROTECH SHEET NUMBER HT-20-203-2-1-R4 DATED 10/25/21.
3. EQUIPMENT AND PROCESS PACKAGE TO BE DESIGNED AND SUPPLIED BY HYDROTECH

PLAN VIEW

SCALE: 1" = 5'-0"

1"=5' 5' 0 5' 10'

© 2020 Barton and Loguidice, D.P.C.
THESE DRAWINGS ARE THE PROPERTY OF BARTON & LOGUIDICE, D.P.C.. ANY MISUSE, REUSE OR ALTERATION OF THESE DRAWINGS SHALL BE AT THE USER'S SOLE RISK AND WITHOUT LIABILITY TO BARTON & LOGUIDICE, D.P.C.. IN THE EVENT THAT A CONFLICT ARISES BETWEEN THE SEALED DRAWINGS AND THE ELECTRONIC FILES, THE SEALED DRAWINGS WILL GOVERN.

REVISIONS

BIOENERGY DEVCO - BIOENERGY INNOVATION CENTER
WASTEWATER TREATMENT IMPROVEMENTS

BIC DETAILED SITE PLAN VIEW
PROCESS WASTEWATER TREATMENT SYSTEM

SUSSEX COUNTY, DELAWARE

SEAFORD

Slate Hill Business Center
3901 Hartzdale Drive
Suite 101
Camp Hill, PA
17011-7843

B&L
Barton & Loguidice, D.P.C.

Date	NOVEMBER, 2021
Scale	AS SHOWN
Sheet Number	C102
Project Number	2163.001.001

Plotted: Nov 12, 2021 – 9:58AM SYR By: rgodfrey
Z:\BL-Vault\D2\18217A02-1C71-4823-8927-9905C4054147\0\2442000-2442999\2442879\L\L\2163.001.001 – BIC – AD Site Plan_rev 10-18-2021 (ID 2442879).dwg
Checked by SCS Drawn by RFG Designed by SCS In charge of INITIALS

HYDROTECH PACKAGE WASTEWATER TREATMENT SYSTEM

LEGEND

1	Biological feeding	8	UF Permeate Tank	16	Drains tank
2	Screening	9	RO	17	Service water
3	Anoxic Reactor	10	RO Permeate Tank	18	Cooling towers
4	Aerobic Reactor	11	RO Concentrate Tank	19	Antifoam & recirculation pumps
5	UF Feeding Tank	12	NF	20	Heat exchanger
6	UF Feeding Pumps	13	NF Concentrate Tank	21	Blowers
7	UF	14	SC RO	22	Chemicals
		15	SC RO Concentrate Tank	23	Control panels room

LEGEND

HOT WATER
DIGESTATE
BIOGAS
NAT. GAS
WATERLINE
FORCE MAIN
LIQUID TRUCKS
SOLID TRUCKS
EX CONTOUR
EX FENCE
PROPERTY LINE
PROP CONTOUR
PROP FORCE MAIN
PROP PIPELINE
EX LIGHT STAND
EX SIGN
EX WELL
EX HYDRANT
EX CONCRETE
EX GRAVEL
PROP GRAVEL

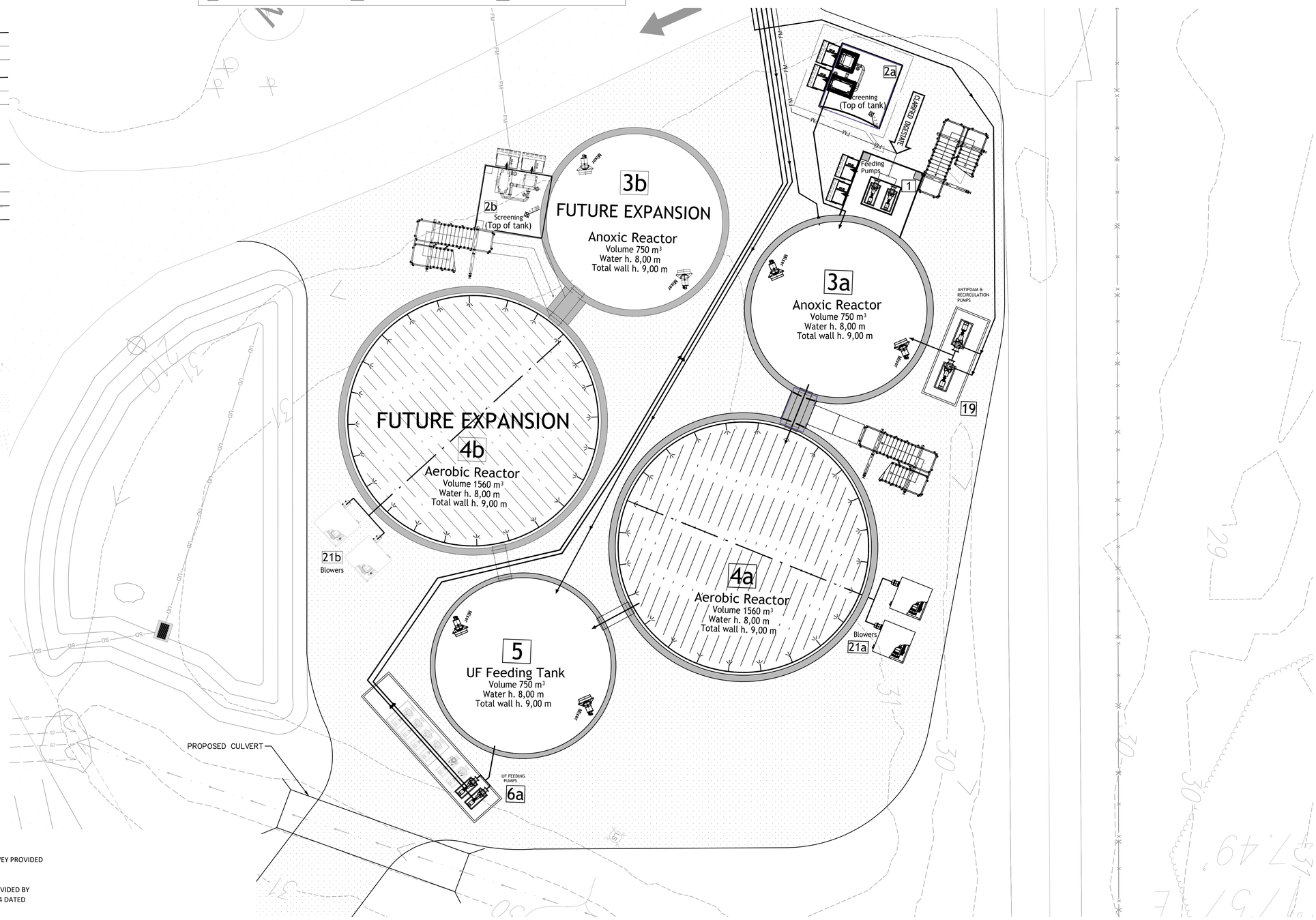

NOTES:

1. BACKGROUND INFORMATION BASED ON SURVEY PROVIDED BY DUFFIELD DATED 9/25/20.
2. PROPOSED EQUIPMENT BASED ON PLANS PROVIDED BY HYDROTECH SHEET NUMBER HT-20-203-2-1-R4 DATED 10/25/21.
3. EQUIPMENT AND PROCESS PACKAGE TO BE DESIGNED AND SUPPLIED BY HYDROTECH

PLAN VIEW

SCALE: 1" = 10'-0"

1"=10' 10' 0 10' 20'

© 2020 Barton and Loguidice, D.P.C.
THESE DRAWINGS ARE THE PROPERTY OF BARTON & LOGUIDICE, D.P.C.. ANY MISUSE, REUSE OR ALTERATION OF THESE DRAWINGS SHALL BE AT THE USER'S SOLE RISK AND WITHOUT LIABILITY TO BARTON & LOGUIDICE, D.P.C.. IN THE EVENT THAT A CONFLICT ARISES BETWEEN THE SEALED DRAWINGS AND THE ELECTRONIC FILES, THE SEALED DRAWINGS WILL GOVERN.

REVISIONS

BIOENERGY DEVCO - BIOENERGY INNOVATION CENTER
WASTEWATER TREATMENT IMPROVEMENTS

BIC DETAILED SITE PLAN VIEW
PROCESS WASTEWATER TREATMENT SYSTEM

SUSSEX COUNTY, DELAWARE

SEAFORD

Slate Hill Business Center
3901 Hartzdale Drive
Suite 101
Camp Hill, PA
17011-7843

Barton & Loguidice, D.P.C.

Date: NOVEMBER, 2021
Scale: AS SHOWN
Sheet Number: C104
Project Number: 2163.001.001

Plotted: Nov 12, 2021 – 9:59AM SYR By: rgodfrey
Z:\BL-Vault\D2\18217A02-1C71-4823-8927-99D5C405417F\0\2442000-2442999\2442879\L\L\2163.001.001 - BIC - AD Site Plan_rev 10-18-2021 (ID 2442879).dwg
Checked by SCS Drawn by RFG Designed by SCS In charge of INITIALS

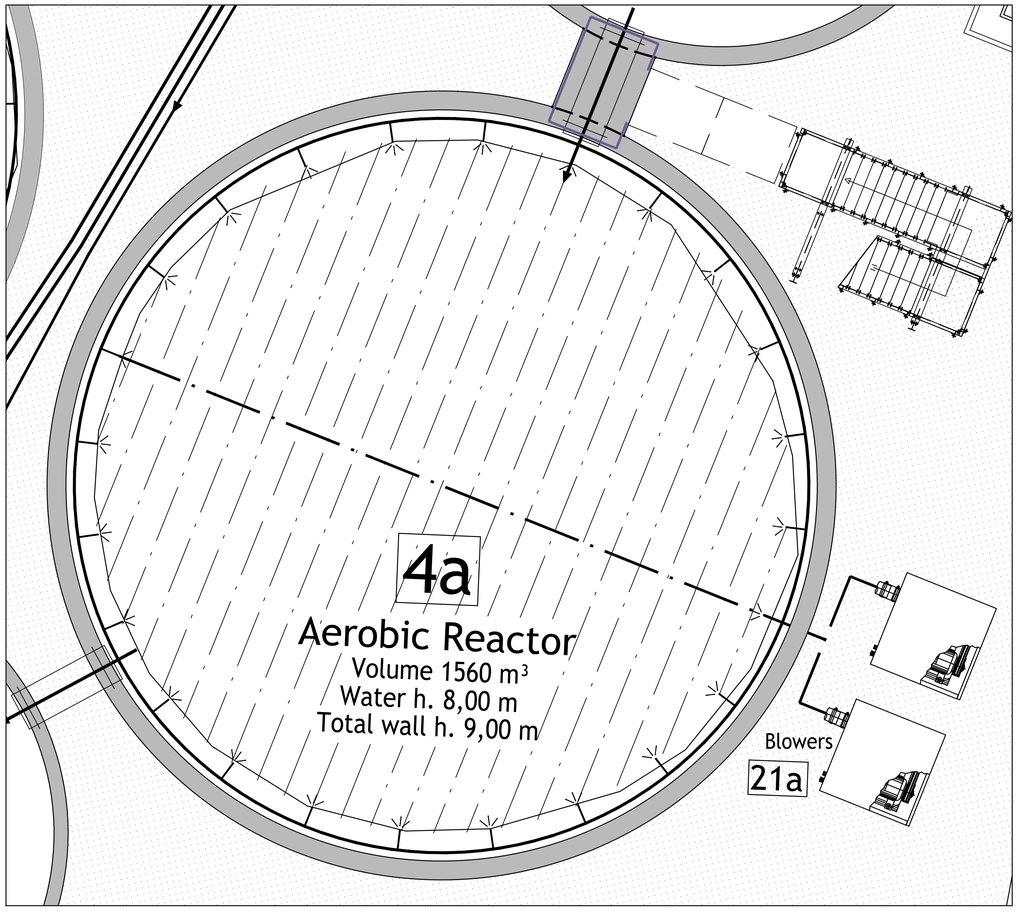

PLAN VIEW

SCALE: 1" = 5'-0"

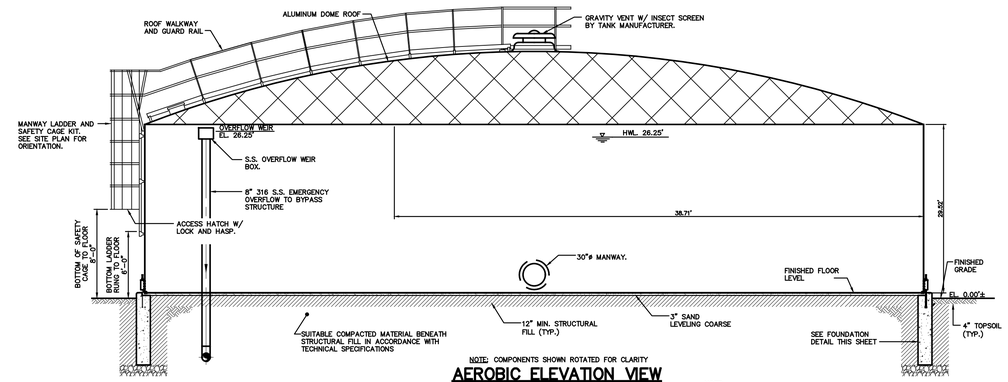

NOTE: COMPONENTS SHOWN ROTATED FOR CLARITY

AEROBIC ELEVATION VIEW

SCALE: NOT TO SCALE

NOTE: COMPONENTS SHOWN ROTATED FOR CLARITY

NOTE:
THE MANUFACTURER OF THE TANK SHALL BE RESPONSIBLE FOR THE DESIGN OF THE TANK FOUNDATION IN ACCORDANCE WITH THE REQUIREMENTS OF THE TECHNICAL SPECIFICATIONS. DESIGN SHALL BE SIGNED/STAMPED BY A LICENSED PROFESSIONAL ENGINEER.

GENERAL NOTES

1. ITEMS ROTATED FOR CLARITY. SEE PLAN FOR LOCATIONS OF EQUIPMENT, PIPING AND APPURTENANCES.
2. THE MANUFACTURER OF THE LINED STEEL TANK SHALL BE RESPONSIBLE FOR THE DESIGN OF THE TANK. DESIGN SHALL BE SIGNED/STAMPED BY DE LICENSED PROFESSIONAL ENGINEER.
3. ADDITIONAL PLANS AND SPECIFICATIONS WILL BE REQUIRED AS PART OF FINAL DETAILED DESIGN COORDINATION WITH HYDROTECH PACKAGE TREATMENT SYSTEM AND THE SUPPORTING INFRASTRUCTURE.

CONCRETE NOTES:

1. DESIGN STRENGTH – STRUCTURAL CONCRETE AND SLAB ON GRADE_ _ _ _ _ _ _ _ _ _ _ 4,000 PSI @ 28 DAYS
2. STANDARDS – DESIGN_ _ _ _ _ _ _ _ _ _ _ _ _ ACI 318 – LATEST EDITION
   DETAILS_ _ _ _ _ _ _ _ _ _ _ _ _ ACI 315 – LATEST EDITION
3. REINFORCING – MESH_ _ _ _ _ _ _ _ _ _ _ _ _ ASTM A–185 (FLAT SHEETS)
   BARS_ _ _ _ _ _ _ _ _ _ _ _ _ _ ASTM A–615 GRADE 60
4. AIR CONTENT – ALL CONCRETE SHALL BE AIR ENTRAINED IN ACCORDANCE WITH SPECIFICATION SECTION 03300.
5. CONCRETE COVER OVER BARS:
   – CONCRETE DEPOSITED ON GROUND_ _ _ _ _ _ _ _ _ _ 3"
   FORMED CONCRETE EXPOSED TO GROUND, WEATHER OR WATER_ _ _ _ _ _ _ _ _ _ _ _ _ _ 2"
   WALLS & SLABS NOT DIRECTLY EXPOSED TO GROUND, WATER OR WEATHER _ _ _ _ _ _ _ _ _ _ _ _ _ _ _ _ _ 1"
6. SPLICES IN REINFORCEMENT: UNLESS OTHERWISE NOTED, ALL SPLICES AND ANCHORAGES SHALL BE MINIMUM 40 BAR DIAMETERS, BUT NOT LESS THAN 18 INCHES. STAGGER SPLICES WHEREVER POSSIBLE AND LOCATE SO AS NOT TO IMPAIR STRENGTH OR MEMBERS.
7. ALL EXPOSED EDGES OF CONCRETE SHALL HAVE A CHAMFER, AS SHOWN ON DRAWINGS.
8. THE CONTRACTOR SHALL NOT POUR ANY CONCRETE PRIOR TO INSPECTION OF THE REINFORCING STEEL AND AUTHORIZATION BY THE ENGINEER.

SEISMIC LOADS:
IMPORTANCE FACTOR = 1.5
SEISMIC DESIGN CATEGORY = A
SEISMIC USE GROUP = III
SOIL SITE CLASSIFICATION = D
MAPPED SPECTRAL RESPONSE:
Ss = 0.105g
S1 = 0.038g

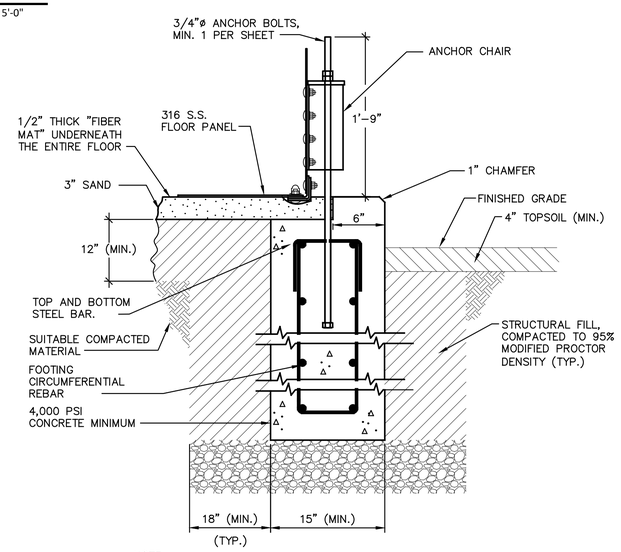

NOTE:
FOUNDATION TO BE DESIGNED BY THE TANK MANUFACTURER IN ACCORDANCE WITH TECHNICAL SPECIFICATION SECTION 13211.

FOUNDATION DETAIL

NOT TO SCALE

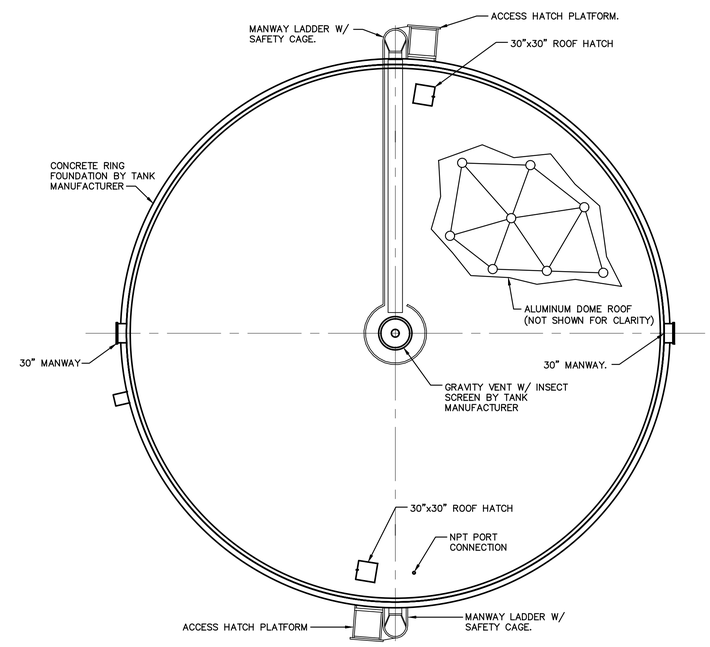

PLAN

SCALE: NOT TO SCALE

© 2020 Barton and Loguidice, D.P.C.
THESE DRAWINGS ARE THE PROPERTY OF BARTON & LOGUIDICE, D.P.C.. ANY MISUSE, REUSE OR ALTERATION OF THESE DRAWINGS SHALL BE AT THE USER'S SOLE RISK AND WITHOUT LIABILITY TO BARTON & LOGUIDICE, D.P.C.. IN THE EVENT THAT A CONFLICT ARISES BETWEEN THE SEALED DRAWINGS AND THE ELECTRONIC FILES, THE SEALED DRAWINGS WILL GOVERN.

REVISIONS

BIOENERGY DEVCO - BIOENERGY INNOVATION CENTER
WASTEWATER TREATMENT IMPROVEMENTS

AEROBIC TANK PLAN AND SECTION VIEWS

SUSSEX COUNTY, DELAWARE

SEAFORD

Slate Hill Business Center
3901 Hartzdale Drive
Suite 101
Camp Hill, PA
17011-7843

B&L
Barton & Loguidice, D.P.C.

Date: NOVEMBER, 2021
Scale: AS SHOWN
Sheet Number: D100
Project Number: 2163.001.001

Plotted: Nov 12, 2021 – 10:42AM SYR By: rgodfrey
Z:\BL-Vault\D2\18217A02-1C71-4823-8927-9905C4054147\0\2444000-2444999\2444691\L\L\2163.001.001 – AERATION AND ANOXIC PLAN (ID 2444691).dwg
Checked by SCS Drawn by RFG Designed by SCS In charge of INITIALS

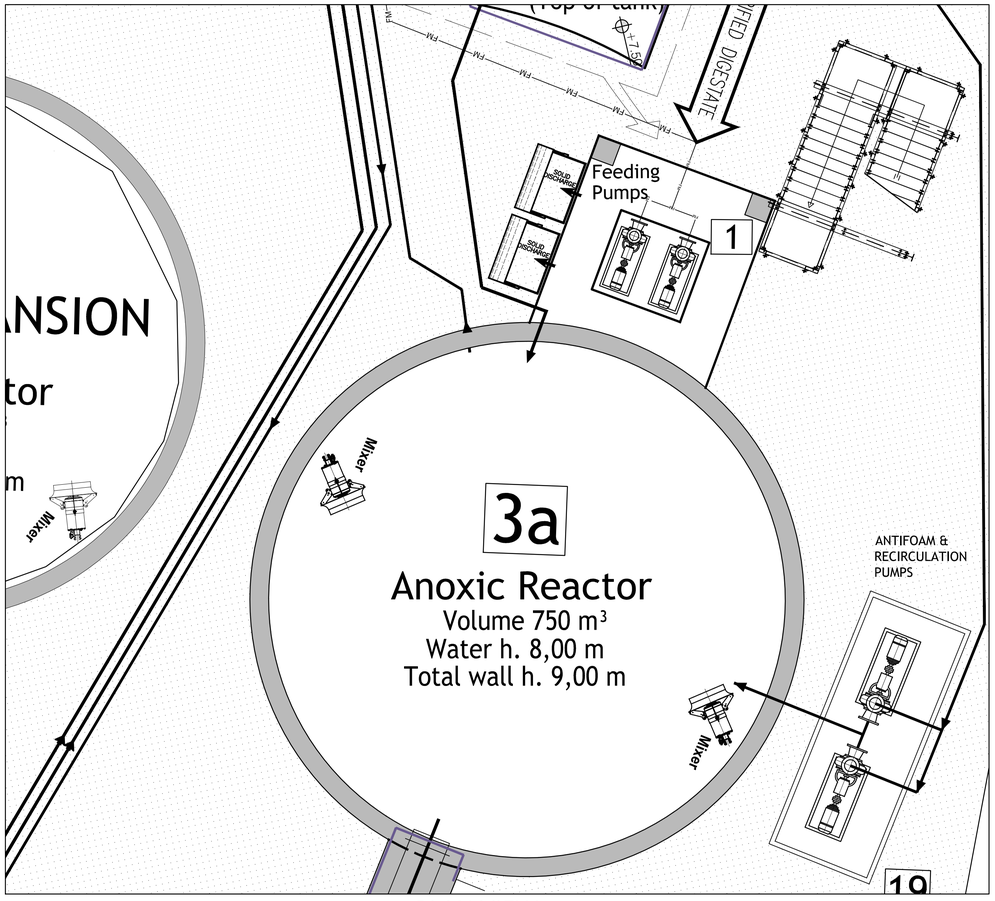

PLAN VIEW

SCALE: 1" = 5'-0"

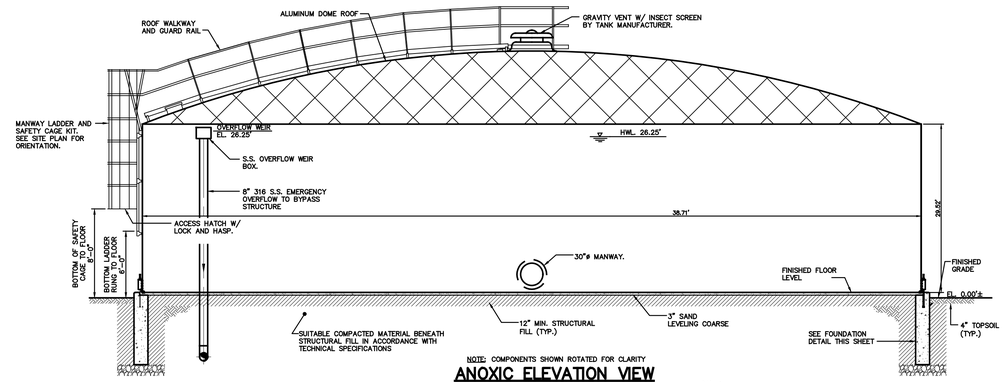

NOTE: COMPONENTS SHOWN ROTATED FOR CLARITY

ANOXIC ELEVATION VIEW

SCALE: NOT TO SCALE

NOTE: COMPONENTS SHOWN ROTATED FOR CLARITY

NOTE:
THE MANUFACTURER OF THE TANK SHALL BE RESPONSIBLE FOR THE DESIGN OF THE TANK FOUNDATION IN ACCORDANCE WITH THE REQUIREMENTS OF THE TECHNICAL SPECIFICATIONS. DESIGN SHALL BE SIGNED/STAMPED BY A LICENSED PROFESSIONAL ENGINEER.

GENERAL NOTES

1. ITEMS ROTATED FOR CLARITY. SEE PLAN FOR LOCATIONS OF EQUIPMENT, PIPING AND APPURTENANCES.
2. THE MANUFACTURER OF THE LINED STEEL TANK SHALL BE RESPONSIBLE FOR THE DESIGN OF THE TANK. DESIGN SHALL BE SIGNED/STAMPED BY DE LICENSED PROFESSIONAL ENGINEER.
3. ADDITIONAL PLANS AND SPECIFICATIONS WILL BE REQUIRED AS PART OF FINAL DETAILED DESIGN COORDINATION WITH HYDROTECH PACKAGE TREATMENT SYSTEM AND THE SUPPORTING INFRASTRUCTURE.

CONCRETE NOTES:

1. DESIGN STRENGTH – STRUCTURAL CONCRETE AND SLAB ON GRADE_ _ _ _ _ _ _ _ _ _ _ 4,000 PSI @ 28 DAYS
2. STANDARDS – DESIGN_ _ _ _ _ _ _ _ _ _ _ _ _ _ ACI 318 – LATEST EDITION
   DETAILS_ _ _ _ _ _ _ _ _ _ _ _ _ _ ACI 315 – LATEST EDITION
3. REINFORCING – MESH_ _ _ _ _ _ _ _ _ _ _ _ _ _ ASTM A–185 (FLAT SHEETS)
   BARS_ _ _ _ _ _ _ _ _ _ _ _ _ _ _ ASTM A–615 GRADE 60
4. AIR CONTENT – ALL CONCRETE SHALL BE AIR ENTRAINED IN ACCORDANCE WITH SPECIFICATION SECTION 03300.
5. CONCRETE COVER OVER BARS:
   – CONCRETE DEPOSITED ON GROUND_ _ _ _ _ _ _ _ _ 3"
   FORMED CONCRETE EXPOSED TO GROUND, WEATHER OR WATER_ _ _ _ _ _ _ _ _ _ _ _ _ 2"
   WALLS & SLABS NOT DIRECTLY EXPOSED TO GROUND, WATER OR WEATHER _ _ _ _ _ _ _ _ _ _ _ _ _ _ _ _ _ _ _ 1"
6. SPLICES IN REINFORCEMENT: UNLESS OTHERWISE NOTED, ALL SPLICES AND ANCHORAGES SHALL BE MINIMUM 40 BAR DIAMETERS, BUT NOT LESS THAN 18 INCHES. STAGGER SPLICES WHEREVER POSSIBLE AND LOCATE SO AS NOT TO IMPAIR STRENGTH OR MEMBERS.
7. ALL EXPOSED EDGES OF CONCRETE SHALL HAVE A CHAMFER, AS SHOWN ON DRAWINGS.
8. THE CONTRACTOR SHALL NOT POUR ANY CONCRETE PRIOR TO INSPECTION OF THE REINFORCING STEEL AND AUTHORIZATION BY THE ENGINEER.

SEISMIC LOADS:
IMPORTANCE FACTOR = 1.5
SEISMIC DESIGN CATEGORY = A
SEISMIC USE GROUP = III
SOIL SITE CLASSIFICATION = D
MAPPED SPECTRAL RESPONSE:
Ss = 0.105g
S1 = 0.038g

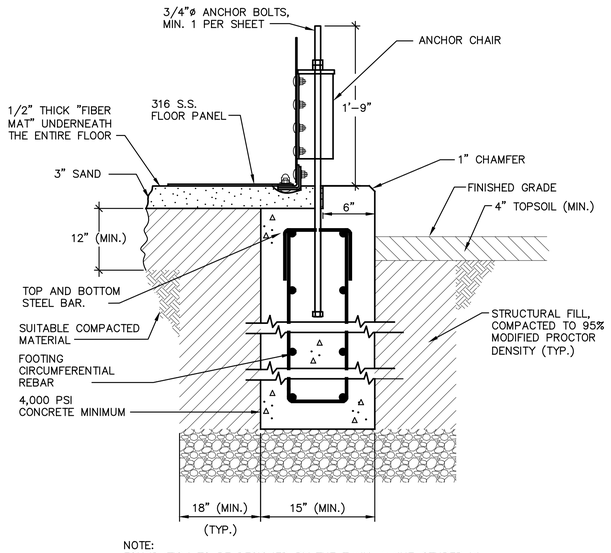

NOTE:
FOUNDATION TO BE DESIGNED BY THE TANK MANUFACTURER IN ACCORDANCE WITH TECHNICAL SPECIFICATION SECTION 13211.

FOUNDATION DETAIL

NOT TO SCALE

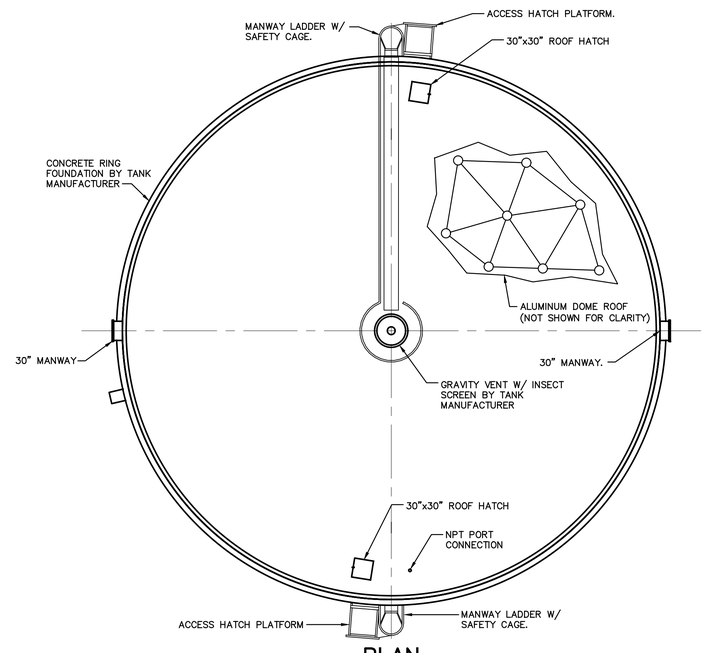

PLAN

SCALE: NOT TO SCALE

© 2020 Barton and Loguidice, D.P.C.
THESE DRAWINGS ARE THE PROPERTY OF BARTON & LOGUIDICE, D.P.C.. ANY MISUSE, REUSE OR ALTERATION OF THESE DRAWINGS SHALL BE AT THE USER'S SOLE RISK AND WITHOUT LIABILITY TO BARTON & LOGUIDICE, D.P.C.. IN THE EVENT THAT A CONFLICT ARISES BETWEEN THE SEALED DRAWINGS AND THE ELECTRONIC FILES, THE SEALED DRAWINGS WILL GOVERN.

REVISIONS

BIOENERGY DEVCO - BIOENERGY INNOVATION CENTER
WASTEWATER TREATMENT IMPROVEMENTS

ANOXIC TANK PLAN AND SECTION VIEWS

SUSSEX COUNTY, DELAWARE

SEAFORD

Slate Hill Business Center
3901 Hartzdale Drive
Suite 101
Camp Hill, PA
17011-7843

B&L
Barton & Loguidice, D.P.C.

Date: NOVEMBER, 2021
Scale: AS SHOWN
Sheet Number: D101
Project Number: 2163.001.001

Plotted: Nov 12, 2021 – 10:43AM SYR By: rgodfrey
Z:\BL-Vault\D2\18217A02-1C71-4823-8927-99B5C4054147\0\2444000-2444999\2444691\L\L\2163.001.001 – AERATION AND ANOXIC PLAN (ID 2444691).dwg

Checked by SCS Drawn by RFG Designed by SCS In charge of INITIALS

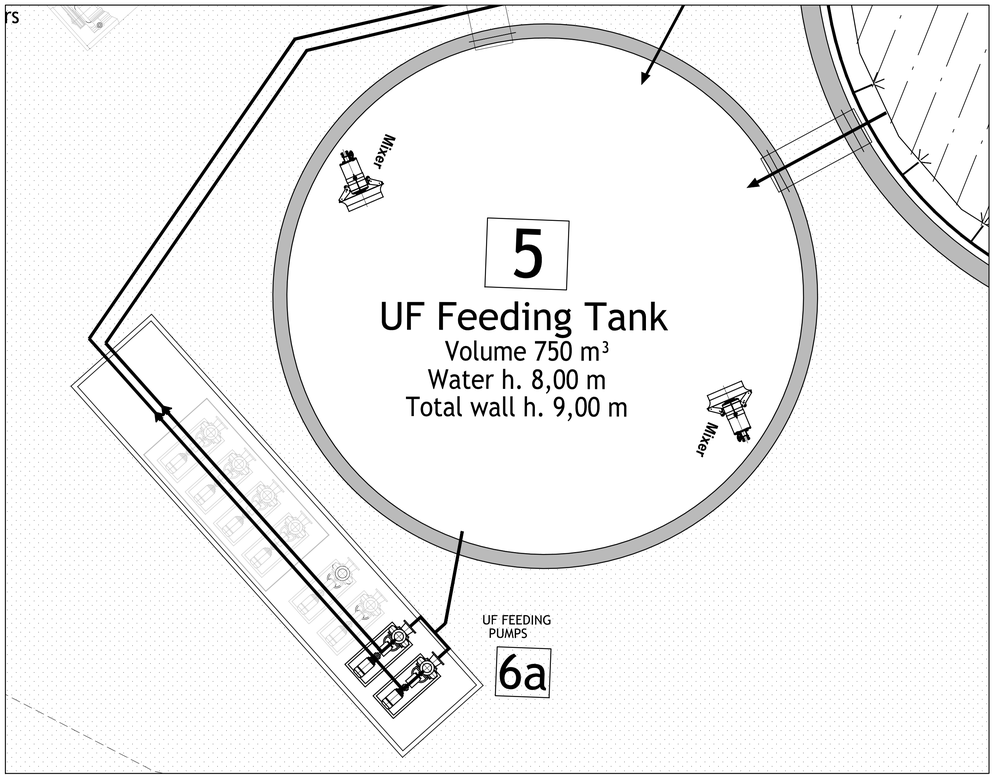

PLAN VIEW

SCALE: 1" = 5'-0"

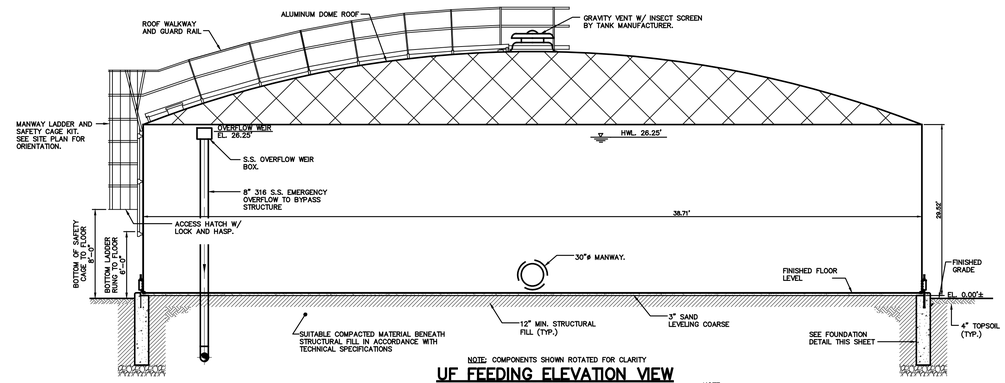

NOTE: COMPONENTS SHOWN ROTATED FOR CLARITY

UF FEEDING ELEVATION VIEW

SCALE: NOT TO SCALE

NOTE: COMPONENTS SHOWN ROTATED FOR CLARITY

NOTE:
THE MANUFACTURER OF THE TANK SHALL BE RESPONSIBLE FOR THE DESIGN OF THE TANK FOUNDATION IN ACCORDANCE WITH THE REQUIREMENTS OF THE TECHNICAL SPECIFICATIONS. DESIGN SHALL BE SIGNED/STAMPED BY A LICENSED PROFESSIONAL ENGINEER.

GENERAL NOTES

1. ITEMS ROTATED FOR CLARITY. SEE PLAN FOR LOCATIONS OF EQUIPMENT, PIPING AND APPURTENANCES.
2. THE MANUFACTURER OF THE LINED STEEL TANK SHALL BE RESPONSIBLE FOR THE DESIGN OF THE TANK. DESIGN SHALL BE SIGNED/STAMPED BY DE LICENSED PROFESSIONAL ENGINEER.
3. ADDITIONAL PLANS AND SPECIFICATIONS WILL BE REQUIRED AS PART OF FINAL DETAILED DESIGN COORDINATION WITH HYDROTECH PACKAGE TREATMENT SYSTEM AND THE SUPPORTING INFRASTRUCTURE.

CONCRETE NOTES:

1. DESIGN STRENGTH – STRUCTURAL CONCRETE AND SLAB ON GRADE_ _ _ _ _ _ _ _ _ _ 4,000 PSI @ 28 DAYS
2. STANDARDS – DESIGN_ _ _ _ _ _ _ _ _ _ _ _ _ ACI 318 – LATEST EDITION
   DETAILS_ _ _ _ _ _ _ _ _ _ _ _ _ _ ACI 315 – LATEST EDITION
3. REINFORCING – MESH_ _ _ _ _ _ _ _ _ _ _ _ ASTM A–185 (FLAT SHEETS)
   BARS_ _ _ _ _ _ _ _ _ _ _ _ _ _ ASTM A–615 GRADE 60
4. AIR CONTENT – ALL CONCRETE SHALL BE AIR ENTRAINED IN ACCORDANCE WITH SPECIFICATION SECTION 03300.
5. CONCRETE COVER OVER BARS:
   – CONCRETE DEPOSITED ON GROUND_ _ _ _ _ _ _ _ _ _
   FORMED CONCRETE EXPOSED TO GROUND, WEATHER OR WATER_ _ _ _ _ _ _ _ _ _ _ _ _ _

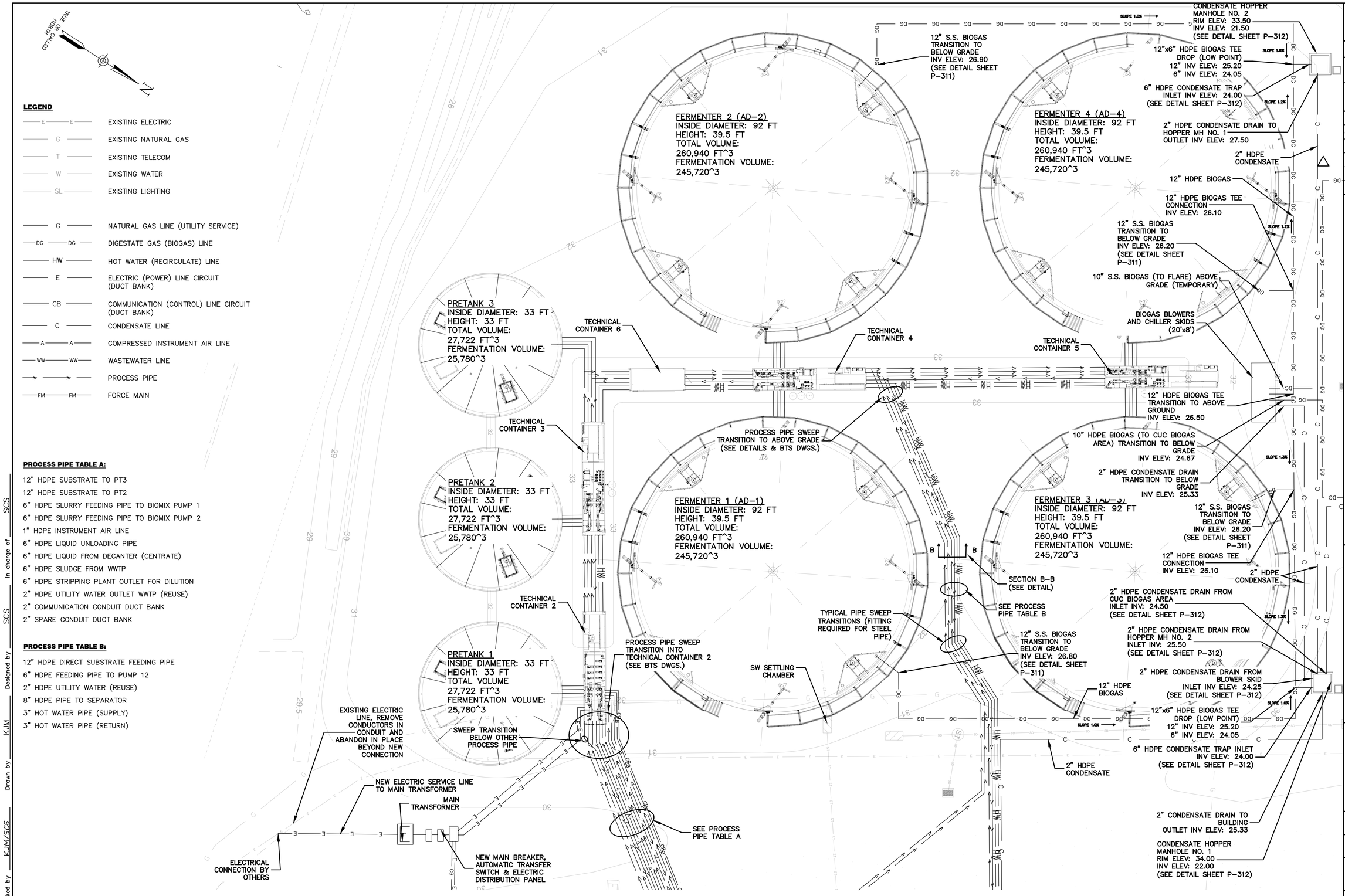

LEGEND

—E—E—	EXISTING ELECTRIC
—G—	EXISTING NATURAL GAS
—T—	EXISTING TELECOM
—W—	EXISTING WATER
—SL—	EXISTING LIGHTING
—G—	NATURAL GAS LINE (UTILITY SERVICE)
—DG—DG—	DIGESTATE GAS (BIOGAS) LINE
—HW—	HOT WATER (RECIRCULATE) LINE
—E—	ELECTRIC (POWER) LINE CIRCUIT (DUCT BANK)
—CB—	COMMUNICATION (CONTROL) LINE CIRCUIT (DUCT BANK)
—C—	CONDENSATE LINE
—A—A—	COMPRESSED INSTRUMENT AIR LINE
—WW—WW—	WASTEWATER LINE
—>—>—	PROCESS PIPE
—FM—FM—	FORCE MAIN

PROCESS PIPE TABLE A:

12" HDPE SUBSTRATE TO PT3
12" HDPE SUBSTRATE TO PT2
6" HDPE SLURRY FEEDING PIPE TO BIOMIX PUMP 1
6" HDPE SLURRY FEEDING PIPE TO BIOMIX PUMP 2
1" HDPE INSTRUMENT AIR LINE
6" HDPE LIQUID UNLOADING PIPE
6" HDPE LIQUID FROM DECANTER (CENTRATE)
6" HDPE SLUDGE FROM WWTP
6" HDPE STRIPPING PLANT OUTLET FOR DILUTION
2" HDPE UTILITY WATER OUTLET WWTP (REUSE)
2" COMMUNICATION CONDUIT DUCT BANK
2" SPARE CONDUIT DUCT BANK

PROCESS PIPE TABLE B:

12" HDPE DIRECT SUBSTRATE FEEDING PIPE
6" HDPE FEEDING PIPE TO PUMP 12
2" HDPE UTILITY WATER (REUSE)
8" HDPE PIPE TO SEPARATOR
3" HOT WATER PIPE (SUPPLY)
3" HOT WATER PIPE (RETURN)

1"=15' 15' 0 15' 30'

PLAN
SCALE: 1" = 15'

THESE DRAWINGS ARE THE PROPERTY OF BARTON & LOGUIDICE, D.P.C. ANY MISUSE, REUSE OR ALTERATION OF THESE DRAWINGS SHALL BE AT THE USER'S SOLE RISK AND WITHOUT LIABILITY TO BARTON & LOGUIDICE, D.P.C. IN THE EVENT THAT A CONFLICT ARISES BETWEEN THE SEALED DRAWINGS AND THE ELECTRONIC FILES, THE SEALED DRAWINGS WILL GOVERN.

ENGINEER: BARTON AND LOGUIDICE (B&L)
3900 HARRISDALE DRIVE SUITE 101
CAMP HILL, PA 17011
(717) 737-8329 (PHONE)
(717) 737-8328 (FAX)

By _____ Date _____
Ck'd _____ Date _____

REVISION		
0	1/22	ISSUED FOR CONSTRUCTION
1	3/22	REVISED PER DNREC COMMENTS
2	6/22	REVISED PER DNREC COMMENTS

BIOENERGY DEVCO – BIOENERGY INNOVATION CENTER
ANAEROBIC DIGESTION FACILITY
AND BIOGAS IMPROVEMENTS

UTILITY LOCATION PLAN – 1
AD TANK CONNECTIONS

SUSSEX COUNTY, DELAWARE

SEAFORD

Barton & Loguidice

Date: MAY 2021
Scale: AS SHOWN
Sheet Number: BIC-0000-P-210
Project Number: 2163.001.001

Plotted: Jun 16, 2022 – 9:00AM SYR By: rgadfrey
Z:\BL-Vault\D2\1821\A02-1C71-4823-8921-99D5C40541A7\0\2279000-2279999\2279032\L\L\2163.001.001 – BIC – Utilities Plans (ID 2279032).dwg
Checked by KJM/SCS Drawn by KJM Designed by SCS In charge of SCS

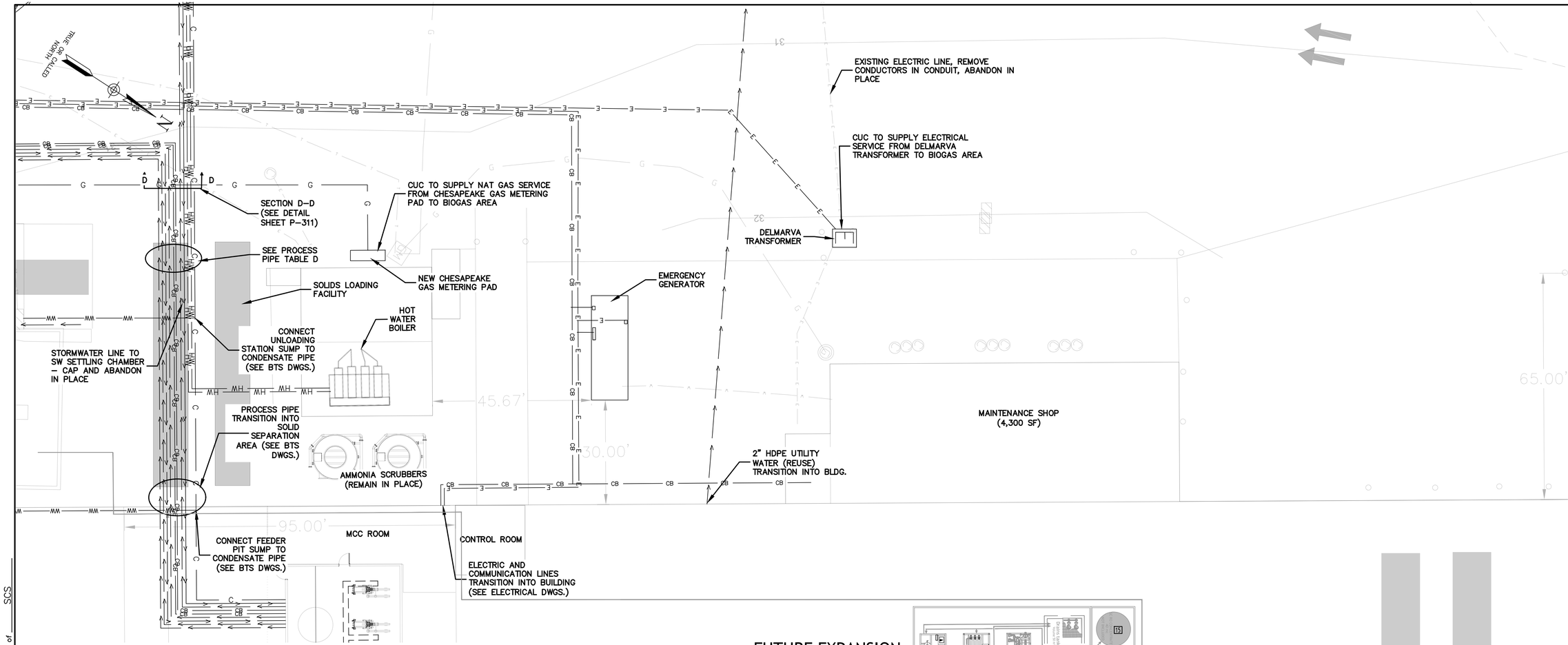

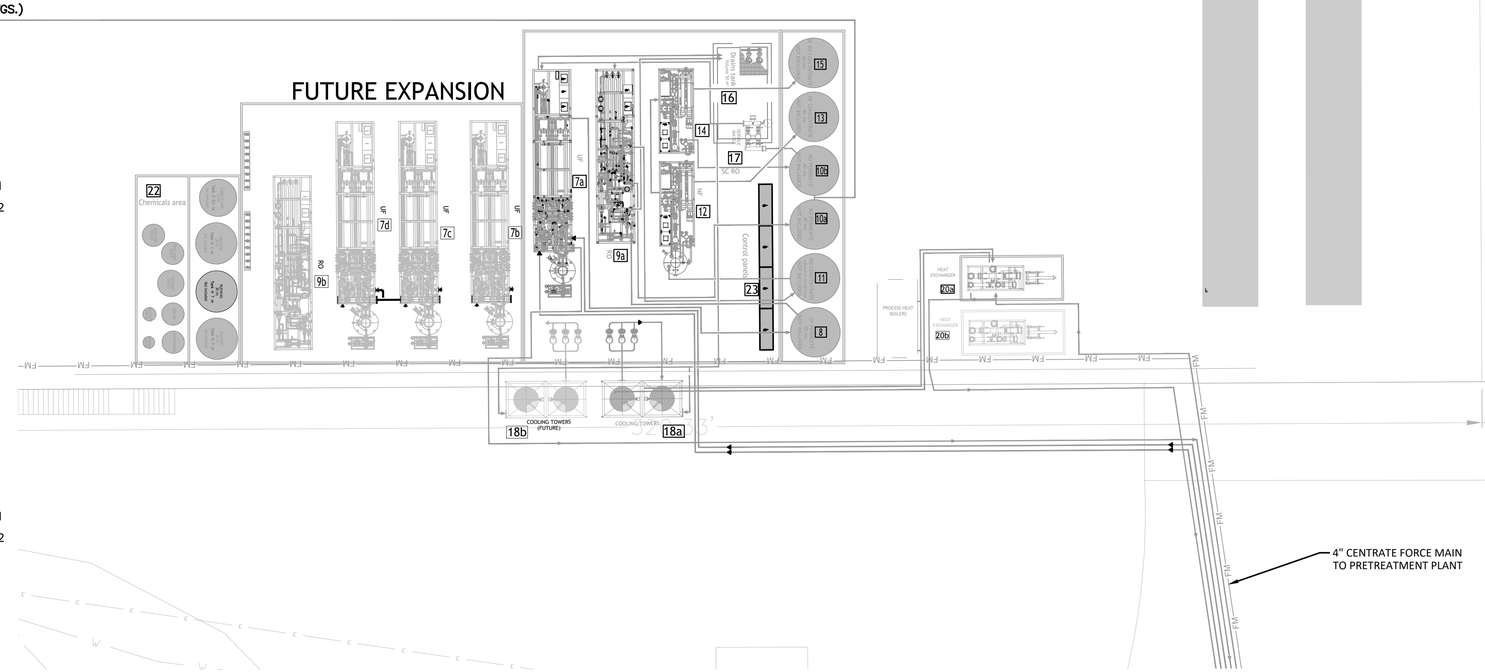

PLAN

SCALE: 1" = 15'

LEGEND

E	EXISTING ELECTRIC
G	EXISTING NATURAL GAS
T	EXISTING TELECOM
W	EXISTING WATER
SL	EXISTING LIGHTING
G	NATURAL GAS LINE (UTILITY SERVICE)
DG	DIGESTATE GAS (BIOGAS) LINE
HW	HOT WATER (RECIRCULATE) LINE
E	ELECTRIC (POWER) LINE CIRCUIT (DUCT BANK)
CB	COMMUNICATION (CONTROL) LINE CIRCUIT (DUCT BANK)
C	CONDENSATE LINE
A	COMPRESSED INSTRUMENT AIR LINE
WW	WASTEWATER LINE
	PROCESS PIPE
FM	FORCE MAIN

PROCESS PIPE TABLE A:

12" HDPE SUBSTRATE TO PT3
12" HDPE SUBSTRATE TO PT2
6" HDPE SLURRY FEEDING PIPE TO BIOMIX PUMP 1
6" HDPE SLURRY FEEDING PIPE TO BIOMIX PUMP 2
1" HDPE INSTRUMENT AIR LINE
6" HDPE LIQUID UNLOADING PIPE
6" HDPE LIQUID FROM DECANTER (CENTRATE)
6" HDPE SLUDGE FROM WWTP
6" HDPE STRIPPING PLANT OUTLET FOR DILUTION
2" HDPE UTILITY WATER OUTLET WWTP (REUSE)
2" COMMUNICATION CONDUIT DUCT BANK
2" SPARE CONDUIT DUCT BANK

PROCESS PIPE TABLE C:

12" HDPE SUBSTRATE TO PT3
12" HDPE SUBSTRATE TO PT2
12" HDPE DIRECT SUBSTRATE FEEDING PIPE
6" HDPE SLURRY FEEDING PIPE TO BIOMIX PUMP 1
6" HDPE SLURRY FEEDING PIPE TO BIOMIX PUMP 2
1" HDPE INSTRUMENT AIR LINE
6" HDPE FEEDING PIPE TO PUMP 12
6" HDPE LIQUID UNLOADING PIPE

15' 0 15' 30'
1"=15'

THESE DRAWINGS ARE THE PROPERTY OF BARTON & LOGUIDICE, D.P.C., ANY MISUSE, REUSE OR ALTERATION OF THESE DRAWINGS SHALL BE AT THE USER'S SOLE RISK AND WITHOUT LIABILITY TO BARTON & LOGUIDICE, D.P.C.. IN THE EVENT THAT A CONFLICT ARISES BETWEEN THE SEALED DRAWINGS AND THE ELECTRONIC FILES, THE SEALED DRAWINGS WILL GOVERN.

ENGINEER: BARTON AND LOGUIDICE (B&L)
3901 HARTZDALE DRIVE SUITE 101
CAMP HILL, PA 17011
(717) 737–8328 (PHONE)
(717) 737–8328 (FAX)

By _____ Date _____
Ck'd _____ Date _____

REVISION		
0	1/22	ISSUED FOR CONSTRUCTION
1	3/22	REVISED PER DNREC COMMENTS
2	6/22	REVISED PER DNREC COMMENTS

BIOENERGY DEVCO – BIOENERGY INNOVATION CENTER
ANAEROBIC DIGESTION FACILITY
AND BIOGAS IMPROVEMENTS

UTILITY LOCATION PLAN – 2
BUILDING CONNECTION, WEST SIDE 1 OF 2

SEAFORD — SUSSEX COUNTY, DELAWARE

Barton & Loguidice

Date: MAY 2021
Scale: AS SHOWN
Sheet Number: BIC–0000–P–211
Project Number: 2163.001.001

Checked by KJM/SCS Drawn by KJM Designed by SCS In charge of SCS
Plotted: Jun 16, 2022 – 9:02AM SYR By: rpadfrey
Z:\BL-Vault\02\18217A02-1C71-4823-8927-99050405447\07\2279000-2279999\2279032\L\L\2163.001.001 – BIC – Utilities Plans (ID 2279032).dwg

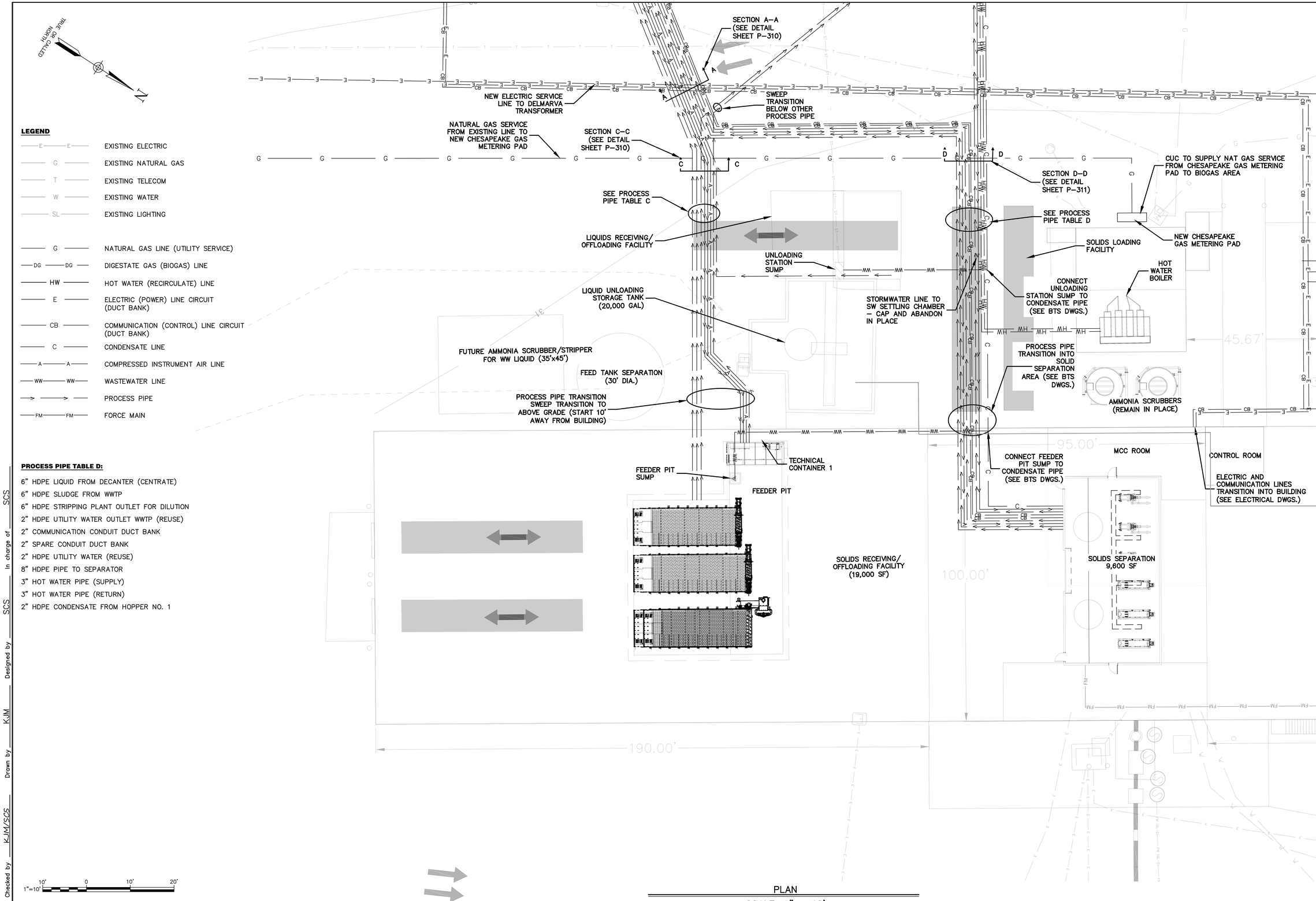

PLAN
SCALE: 1" = 10'

LEGEND

E	EXISTING ELECTRIC
G	EXISTING NATURAL GAS
T	EXISTING TELECOM
W	EXISTING WATER
SL	EXISTING LIGHTING
G	NATURAL GAS LINE (UTILITY SERVICE)
DG	DIGESTATE GAS (BIOGAS) LINE
HW	HOT WATER (RECIRCULATE) LINE
E	ELECTRIC (POWER) LINE CIRCUIT (DUCT BANK)
CB	COMMUNICATION (CONTROL) LINE CIRCUIT (DUCT BANK)
C	CONDENSATE LINE
A	COMPRESSED INSTRUMENT AIR LINE
WW	WASTEWATER LINE
→	PROCESS PIPE
FM	FORCE MAIN

PROCESS PIPE TABLE D:

6" HDPE LIQUID FROM DECANTER (CENTRATE)
6" HDPE SLUDGE FROM WWTP
6" HDPE STRIPPING PLANT OUTLET FOR DILUTION
2" HDPE UTILITY WATER OUTLET WWTP (REUSE)
2" COMMUNICATION CONDUIT DUCT BANK
2" SPARE CONDUIT DUCT BANK
2" HDPE UTILITY WATER (REUSE)
8" HDPE PIPE TO SEPARATOR
3" HOT WATER PIPE (SUPPLY)
3" HOT WATER PIPE (RETURN)
2" HDPE CONDENSATE FROM HOPPER NO. 1

THESE DRAWINGS ARE THE PROPERTY OF BARTON & LOGUIDICE, D.P.C. ANY MISUSE, REUSE OR ALTERATION OF THESE DRAWINGS SHALL BE AT THE USER'S SOLE RISK AND WITHOUT LIABILITY TO BARTON & LOGUIDICE, D.P.C. IN THE EVENT THAT A CONFLICT ARISES BETWEEN THE SEALED DRAWINGS AND THE ELECTRONIC FILES, THE SEALED DRAWINGS WILL GOVERN.

ENGINEER: BARTON AND LOGUIDICE (B&L)
3900 HARRISDALE DRIVE SUITE 101
CAMP HILL, PA 17011
(717) 737–8329 (PHONE)
(717) 737–8328 (FAX)

By _____ Date _____
Ck'd _____ Date _____

REVISION		
0	1/22	ISSUED FOR CONSTRUCTION
1	3/22	REVISED PER DNREC COMMENTS
2	6/22	REVISED PER DNREC COMMENTS

BIOENERGY DEVCO – BIOENERGY INNOVATION CENTER
ANAEROBIC DIGESTION FACILITY
AND BIOGAS IMPROVEMENTS

UTILITY LOCATION PLAN – 3
BUILDING CONNECTION, WEST SIDE 2 OF 2

SUSSEX COUNTY, DELAWARE
SEAFORD

Barton & Loguidice

Date: MAY 2021
Scale: AS SHOWN
Sheet Number: BIC–0000–P–212
Project Number: 2163.001.001

Checked by KJM/SCS Drawn by KJM Designed by SCS In charge of SCS

Plotted: Jun 16, 2022 – 9:04AM SYR By: rgodfrey
Z:\BL-Vault\02\821702-1C71-4823-8927-99D5C405141F\0\2279000-2279999\2279032\L\L\2163.001.001 – BIC – Utilities Plans (ID 2279032).dwg

PLAN

SCALE: 1" = 15'

LEGEND

E — E	EXISTING ELECTRIC
G	EXISTING NATURAL GAS
T	EXISTING TELECOM
W	EXISTING WATER
SL	EXISTING LIGHTING
G	NATURAL GAS LINE (UTILITY SERVICE)
DG — DG	DIGESTATE GAS (BIOGAS) LINE
HW	HOT WATER (RECIRCULATE) LINE
E	ELECTRIC (POWER) LINE CIRCUIT (DUCT BANK)
CB	COMMUNICATION (CONTROL) LINE CIRCUIT (DUCT BANK)
C	CONDENSATE LINE
A — A	COMPRESSED INSTRUMENT AIR LINE
WW — WW	WASTEWATER LINE
	PROCESS PIPE
FM — FM	FORCE MAIN

15' 0 15' 30'
1"=15'

Plotted: Jun 16, 2022 – 9:05AM SYR By: rgodfrey
Z:\BL-Vault\D2\1827A02-1071-4823-8927-99905405414f7\0\2279000-2279999\2279032\L\L\2163.001.001 – BIC – Utilities Plans (ID 2279032).dwg

Checked by KJM/SCS Drawn by KJM Designed by SCS In charge of SCS

THESE DRAWINGS ARE THE PROPERTY OF BARTON & LOGUIDICE, D.P.C. ANY MISUSE, REUSE OR ALTERATION OF THESE DRAWINGS SHALL BE AT THE USER'S SOLE RISK AND WITHOUT LIABILITY TO BARTON & LOGUIDICE, D.P.C. IN THE EVENT THAT A CONFLICT ARISES BETWEEN THE SEALED DRAWINGS AND THE ELECTRONIC FILES, THE SEALED DRAWINGS WILL GOVERN.

ENGINEER: BARTON AND LOGUIDICE (B&L)
3901 HARRISDALE DRIVE SUITE 101
CAMP HILL, PA 17011
(717) 737-8328 (PHONE)
(717) 737-8328 (FAX)

By _____ Date _____
Ck'd _____ Date _____

REVISION

0	1/22	ISSUED FOR CONSTRUCTION
1	3/22	REVISED PER DNREC COMMENTS
2	6/22	REVISED PER DNREC COMMENTS

BIOENERGY DEVCO – BIOENERGY INNOVATION CENTER
ANAEROBIC DIGESTION FACILITY
AND BIOGAS IMPROVEMENTS

UTILITY LOCATION PLAN – 4
FUTURE WASTEWATER TREATMENT PLANT

SEAFORD
SUSSEX COUNTY, DELAWARE

Barton & Loguidice

Date
MAY 2021

Scale
AS SHOWN

Sheet Number
BIC–0000–P–213

Project Number
2163.001.001

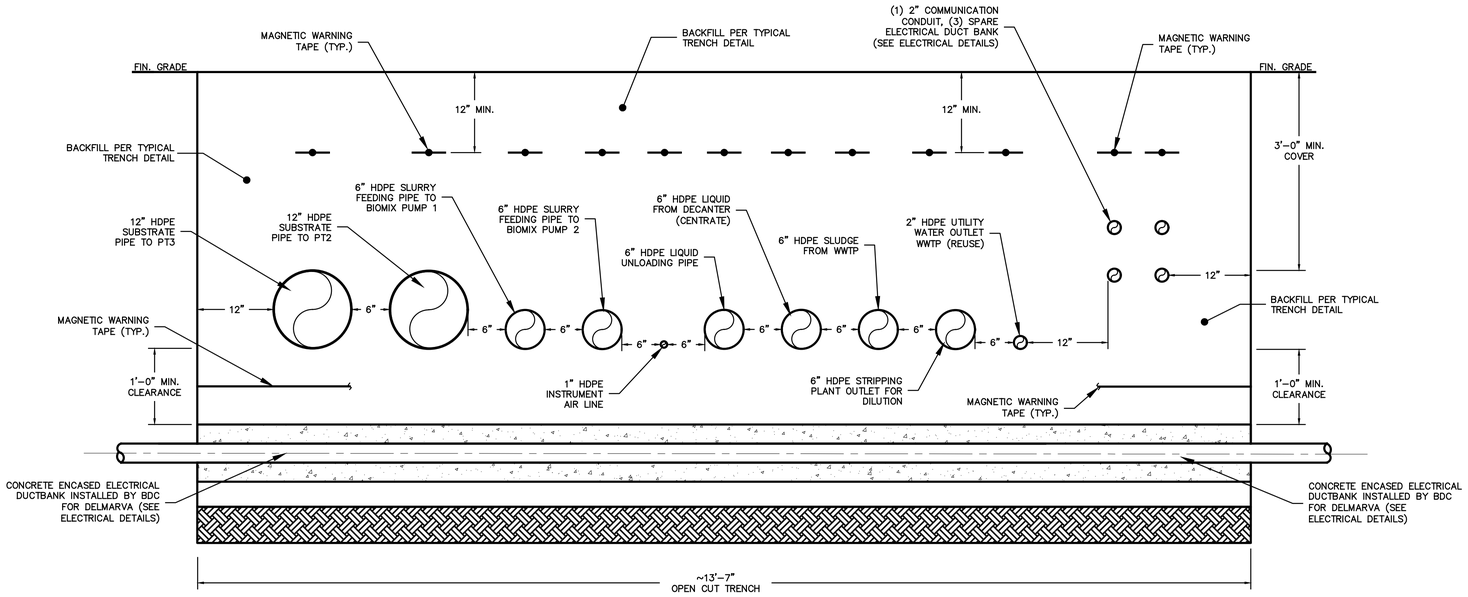

SECTION A–A TRENCH DETAIL

NOT TO SCALE

GENERAL NOTES:

1. AT LEAST 3 DAYS BEFORE STARTING ANY EARTH DISTURBANCE ACTIVITIES, ALL CONTRACTORS INVOLVED IN THOSE ACTIVITIES SHALL NOTIFY MISS UTILITY AT 1–800–282–8555 FOR THE LOCATION OF EXISTING UNDERGROUND UTILITIES.
2. EXCAVATION AND PIPE INSTALLATION TO BE IN ACCORDANCE WITH ASTM D2774.
3. PIPE CROSSINGS ARE TO MAINTAIN A MINIMUM OF 1' OF VERTICAL CLEARANCE.
4. POWER AND CONTROL LINES (ELECTRICAL CONDUIT) ARE TO BE INSTALLED UNDERGROUND AND AT A MINIMUM OF 2' BELOW FINISHED GRADE.
5. ALL GAS PIPING (BIOGAS, NATURAL GAS SERVICE, ETC.) IS TO BE INSTALLED A MINIMUM OF 3' BELOW FINISHED GRADE AND IS TO MAINTAIN A MINIMUM 1' HORIZONTAL CLEARANCE WITH ALL PIPING.
6. BIOGAS PIPING, PRIOR TO THE BIOGAS BLOWER, IS TO MAINTAIN A MINIMUM 1.0% SLOPE TOWARDS THE CONDENSATE TRAP.
7. ALL PIPING INSTALLED UNDER ROADWAYS MUST HAVE A MINIMUM 3' OF SOIL COVER.
8. CONDENSATE LINES ARE TO BE INSTALLED UNDERGROUND AT THE INVERT ELEVATIONS SHOWN, AND ARE TO MAINTAIN A MINIMUM 1.0% SLOPE TOWARDS THE CONDENSATE HOPPER.
9. CONDENSATE LINES ARE TO BE INSTALLED IN A MANNER THAT MINIMIZES PIPE BENDS AND LOW POINTS, AND ALL LINES LOCATED ABOVE GROUND OR TRANSITIONING TO BELOW GROUND ARE TO BE INSULATED.
10. PROVIDE A MINIMUM 6" FOR PIPE BEDDING. MAXIMUM PARTICLE SIZE 0.5". TRENCH BOTTOM TO BE FREE OF WATER BEFORE PLACING BEDDING.
11. INSTALL MAGNETIC WARNING TAPE PER RESPECTIVE TYPE OF PIPING (EX – GAS, WATER, ELECTRIC, ETC.).

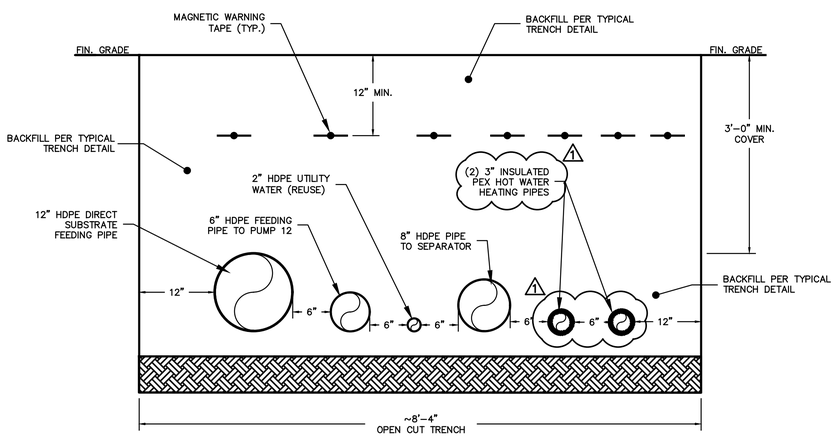

SECTION B–B TRENCH DETAIL

NOT TO SCALE

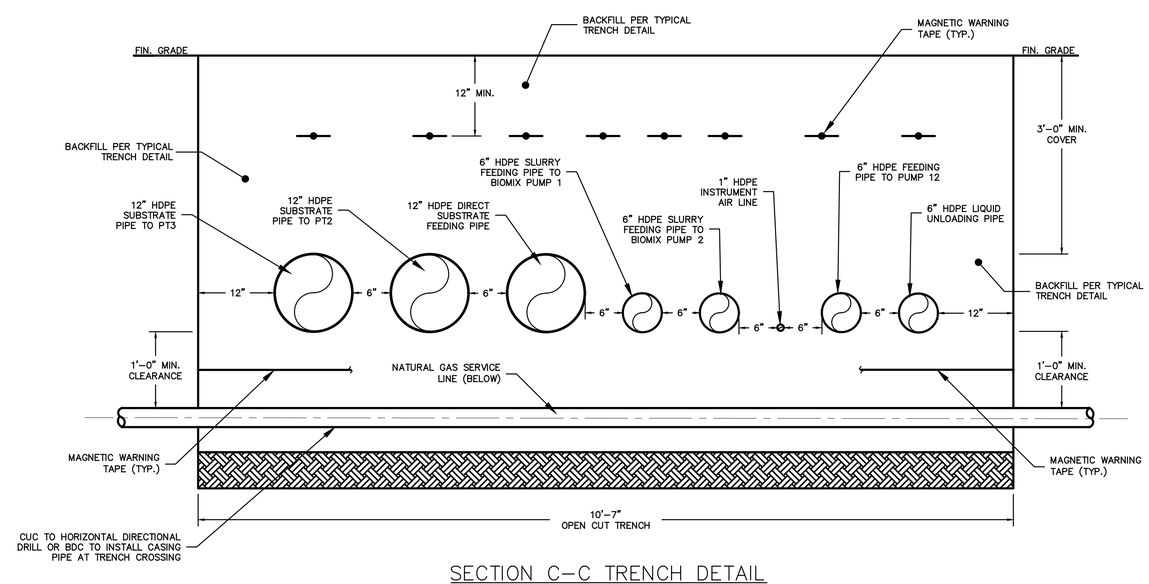

SECTION C–C TRENCH DETAIL

NOT TO SCALE

NOTES:

1. CASING PIPE SHALL BE HDPE AND HAVE MINIMUM 1" ANNUAL SPACE.

THESE DRAWINGS ARE THE PROPERTY OF BARTON & LOGUIDICE, D.P.C. ANY MISUSE, REUSE OR ALTERATION OF THESE DRAWINGS SHALL BE AT THE USER'S SOLE RISK AND WITHOUT LIABILITY TO BARTON & LOGUIDICE, D.P.C. IN THE EVENT THAT A CONFLICT ARISES BETWEEN THE SEALED DRAWINGS AND THE ELECTRONIC FILES, THE SEALED DRAWINGS WILL GOVERN.

ENGINEER: BARTON AND LOGUIDICE (B&L)
3001 HARTZDALE DRIVE SUITE 101
CAMP HILL, PA 17011
(717) 737–8328 (PHONE)
(717) 737–8328 (FAX)

By _____ Date _____
Ck'd _____ Date _____

REVISION		
0	1/22	ISSUED FOR CONSTRUCTION
1	3/22	REVISED PER DNREC COMMENTS

BIOENERGY DEVCO – BIOENERGY INNOVATION CENTER
ANAEROBIC DIGESTION FACILITY
AND BIOGAS IMPROVEMENTS

UTILITY PLAN DETAILS – 1

SUSSEX COUNTY, DELAWARE

SEAFORD

Barton & Loguidice

Date: MAY 2021

Scale: AS SHOWN

Sheet Number: BIC–0000–P–310

Project Number: 2163.001.001

Plotted: Jun 16, 2022 – 9:19AM SYR By: rgodfrey
Z:\BL–Vault\D2\18217A02–1C71–4823–8927–99D5C4054147\D\2256000–2256999\2256148\L\L\2163.001.001 – BIC – Utilities Plan – Details (ID 2256148).dwg

Checked by KJM/SCS Drawn by KJM Designed by SCS In charge of SCS

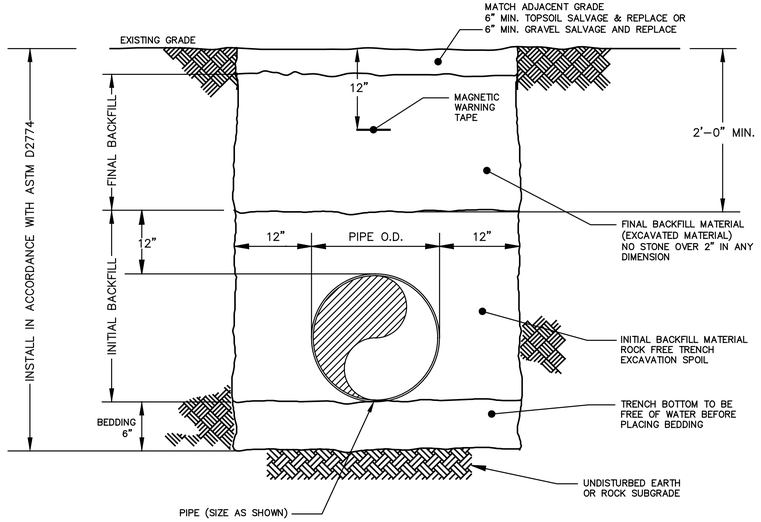

TYPICAL TRENCH DETAIL

NOT TO SCALE

NOTES:

1. TYPICAL TRENCH DETAIL IS APPLICABLE TO ALL PIPING SHOWN ON THE UTILITY PLANS. PIPING IS TO BE INSTALLED PER THE UTILITY PLAN ELEVATIONS OR TO THE MINIMUM DEPTH SPECIFIED HEREIN; SIZE AND MATERIAL OF CONSTRUCTION AS SHOWN.
2. MINIMUM 3' SOIL COVER REQUIRED OVER PIPE. SOIL DEPTH CAN BE ACHIEVED WITH EARTH FILL IF COMPATIBLE WITH ADJACENT TOPOGRAPHY.
3. PIPE SHALL BE INSTALLED IN CENTER LINE OF TRENCH, AS SHOWN ON THE DRAWINGS. ALLOW INSTALLED PIPE TO SERPENTINE WITHIN THE TRENCH TO REDUCE PIPE STRESSES WHEN EQUILIBRIUM TEMPERATURES OCCUR AFTER PIPE BURIAL.
4. FOR PIPE INSTALLATIONS, MAGNETIC WARNING TAPE, SHALL BE BRIGHT IN COLOR, CONTINUOUSLY PRINTED WITH "CAUTION BURIED PIPELINE BELOW," MINIMUM OF 6" BY 4 MILS THICK, MANUFACTURED FOR DIRECT BURIAL. COLOR AND PRINTING SHALL BE PERMANENT, UNAFFECTED BY MOISTURE AND SOIL. MAGNETIC WARNING TAPE SHALL BE PLACED A OF MINIMUM 12" BELOW FINISHED GRADE.
5. FINAL SURFACE TO BE EQUAL TO OR BETTER THAN ORIGINAL CONDITION.
6. EXCAVATED SOILS TO REMAIN ON SITE UNLESS OFFSITE DISPOSAL APPROVED BY ENGINEER AND OWNER.
7. COORDINATE PIPE CROSSING WITH OTHER UNDERGROUND PIPING (NEW AND EXISTING) TO MAINTAIN 1' OF SEPARATION.

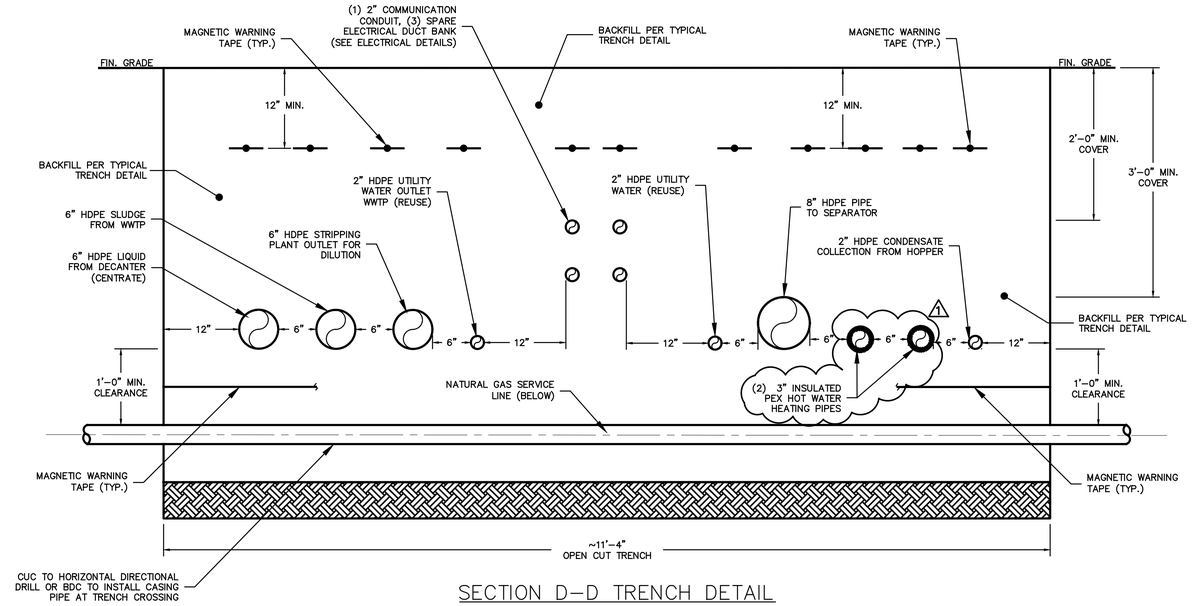

SECTION D–D TRENCH DETAIL

NOT TO SCALE

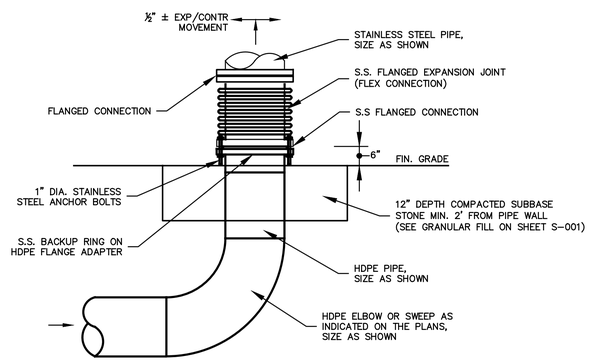

HDPE PIPING TRANSITION TO ABOVE/BELOW GROUND

NOT TO SCALE

NOTES:

1. REFER TO UTILITY PLANS FOR HDPE AND STAINLESS STEEL PIPE SIZES.
2. FLEX CONNECTORS SHALL BE USED PRIOR TO ALL EQUIPMENT SKIDS, MINIMUM 12" FLANGE TO FLANGE LENGTH FOR ALL PIPE LESS THAN 6" DIAMETER. MINIMUM 18" FLANGE TO FLANGE LENGTH FOR PIPE GREATER THAN 6" DIAMETER.
3. FLEX CONNECTION SHALL BE MASON INDUSTRIES, INC. FFL BRAIDED HOSE WITH FIXED AND FLOATING FLANGES, OR ENGINEER APPROVED EQUAL.
4. PIPE TRANSITION HEIGHT TO SUIT INLET/OUTLET CONNECTION OR AS NOTED ON THE PLANS. SEE BTS DRAWINGS OR VERIFY WITH FINAL VENDOR SUBMITTALS FOR EQUIPMENT CONNECTIONS.

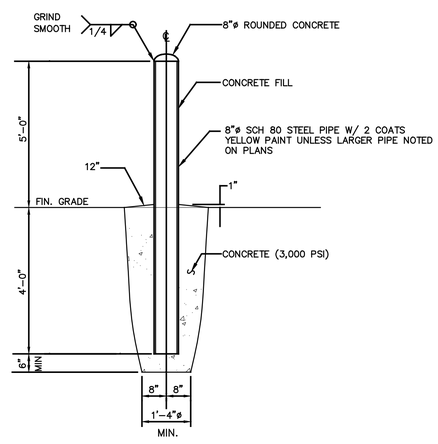

BOLLARD DETAIL

NOT TO SCALE

NOTES:

1. MIN 30" JERSEY BARRIERS MAY BE SUBSTITUTED FOR BOLLARDS WITH APPROVAL OF ENGINEER.

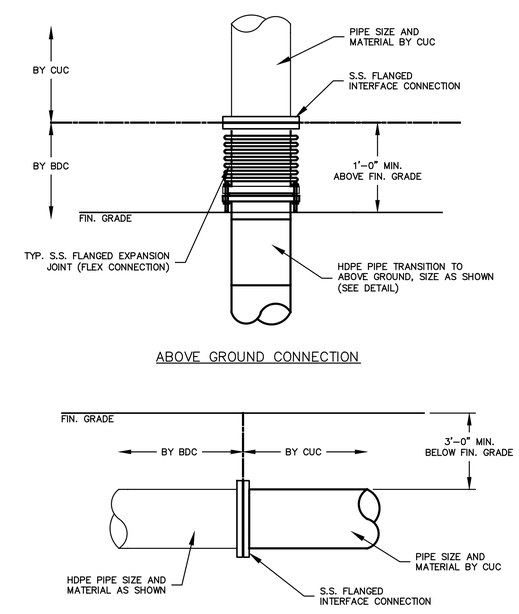

BDC END – START CUC CONNECTION INTERFACE

NOT TO SCALE

NOTES:

1. IF THE ABOVE OR BELOW GROUND PIPE IS NOT READY TO BE INSTALLED BY CUC, THE CONTRACTOR SHALL INSTALL A BLIND FLANGE AT THE END OF THE PIPE.

THESE DRAWINGS ARE THE PROPERTY OF BARTON & LOGUIDICE, D.P.C. ANY MISUSE, REUSE OR ALTERATION OF THESE DRAWINGS SHALL BE AT THE USER'S SOLE RISK AND WITHOUT LIABILITY TO BARTON & LOGUIDICE, D.P.C. IN THE EVENT THAT A CONFLICT ARISES BETWEEN THE SEALED DRAWINGS AND THE ELECTRONIC FILES, THE SEALED DRAWINGS WILL GOVERN.

ENGINEER: BARTON AND LOGUIDICE (B&L)
3001 HARTZDALE DRIVE SUITE 101
CAMP HILL, PA 17011
(717) 737-8328 (PHONE)
(717) 737-8328 (FAX)

By _____ Date _____
Ck'd _____ Date _____

REVISION

0	1/22	ISSUED FOR CONSTRUCTION
1	3/22	REVISED PER DNREC COMMENTS

BIOENERGY DEVCO – BIOENERGY INNOVATION CENTER
ANAEROBIC DIGESTION FACILITY
AND BIOGAS IMPROVEMENTS

UTILITY PLAN DETAILS – 2

SUSSEX COUNTY, DELAWARE

SEAFORD

Barton & Loguidice

Date MAY 2021

Scale AS SHOWN

Sheet Number BIC–0000–P–311

Project Number 2163.001.001

Plotted: Jun 16, 2022 – 9:20AM SYR By: rgodfrey
Z:\BL-Vault\D2\18217A02-1C71-4823-8927-99D5C4054147\D\2256000-2256999\2256148\L\L\2163.001.001 – BIC – Utilities Plan – Details (ID 2256148).dwg

Checked by KJM/SCS Drawn by KJM Designed by SCS In charge of SCS