INLAND BAYS REGIONAL WASTEWATER FACILITY
PHASE #2 EXPANSION
CONTRACT S19-10
100% SUBMITTAL

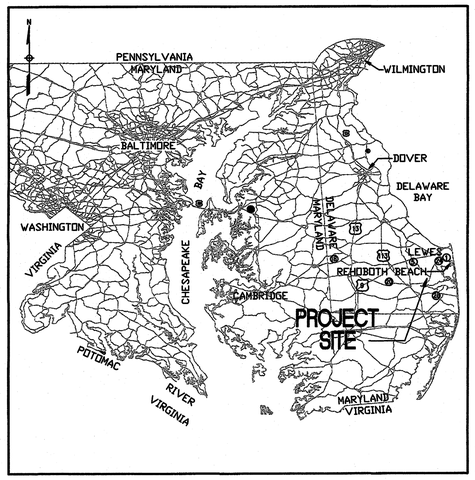

VICINITY MAP

SCALE: 1" = 20 MILES

SEAL OF SUSSEX COUNTY DELAWARE
WILLIAM PENN PROPRIETOR & GOVERNOR
1683

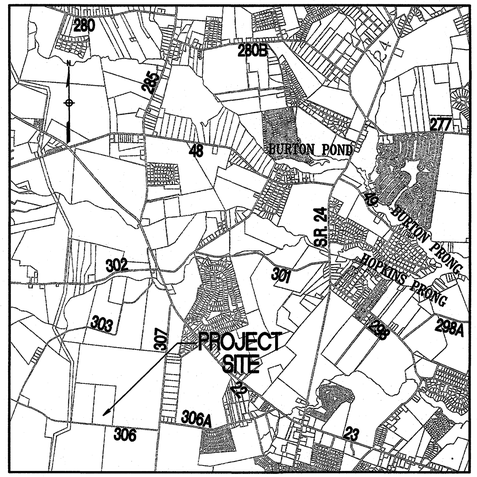

LOCATION PLAN

SCALE: 1" = 1 MILE

SUSSEX COUNTY, DELAWARE

NOT FOR CONSTRUCTION

SUSSEX COUNTY ENGINEERING DEPARTMENT

01/07/2019

COUNTY ENGINEER — DATE

N:\14256-026\CADD\14256026G00-01.dwg

REVISIONS		

CLIENT INFORMATION

SUSSEX COUNTY, DE
ENGINEERING
DEPARTMENT

INLAND BAYS RWF
PHASE #2 EXPANSION:
CONTRACT S19-10

KEY PLAN

GRAPHIC SCALES

SIGNATURE

ROBERT H MATHEWS LICENSE No. 21386 DELAWARE PROFESSIONAL ENGINEER
1/2/19

WRA
Whitman, Requardt & Associates, LLP
801 South Caroline Street, Baltimore, Maryland 21231

COVER SHEET

DRAWING NO.

G00.01

SCALE: NONE		
DATE: DEC. 2018	SHEET 1	OF 217
DES: LAQ	DRAWN: MH	CHECK: DCC

LIST OF DRAWINGS

SHEET NO.	DRAWING NO.	DRAWING TITLE
GENERAL		
1	G00.01	COVER SHEET
2	G01.01	LIST OF DRAWINGS
3	G02.01	GENERAL NOTES, ABBREVIATIONS, AND LEGEND
4	G03.01	SURVEY CONTROL DATA
5	G03.02	FACILITIES AND UTILITIES STAKEOUT DATA
6	G03.03	UTILITIES STAKEOUT DATA
7	G03.04	UTILITIES STAKEOUT DATA
8	G03.05	UTILITIES STAKEOUT DATA
CIVIL		
9	C00.01	EXISTING SITE PLAN
10	C01.01	DEMOLITION PLAN
11	C01.02	DEMOLITION PLAN
12	C02.01	OVERALL SITE PLAN
13	C02.02	SITE AND UTILITY PLAN
14	C02.03	SITE AND UTILITY PLAN
15	C02.04	SITE AND UTILITY PLAN
16	C03.01	GRADING PLAN
17	C03.02	GRADING PLAN
18	C03.03	GRADING PLAN
19	C04.01	UTILITY PROFILES
20	C04.02	UTILITY PROFILES
21	C04.03	UTILITY PROFILES
22	C04.04	UTILITY PROFILES
23	C04.05	UTILITY PROFILES
24	C04.06	UTILITY PROFILES
25	C04.07	UTILITY PROFILES
26	C04.08	UTILITY PROFILES
27	C04.09	UTILITY PROFILES
28	C04.10	UTILITY PROFILES
29	C04.11	UTILITY PROFILES
30	C04.12	UTILITY PROFILES
31	C04.13	UTILITY PROFILES
32	C04.14	UTILITY PROFILES
33	C05.01	LAGOON DETAILS
34	C05.02	UTILITY DETAILS
35	C06.01	SEDIMENT AND STORMWATER MANAGEMENT COVER SHEET
36	C06.02	STORMWATER MANAGEMENT PHASING PLAN
37	C06.03	CONSTRUCTION SITE STORMWATER MANAGEMENT PLAN
38	C06.04	CONSTRUCTION SITE STORMWATER MANAGEMENT PLAN
39	C06.05	SEDIMENT AND STORMWATER MANAGEMENT SITE DETAILS AND NOTES
40	C06.06	SEDIMENT AND STORMWATER MANAGEMENT SITE DETAILS AND NOTES
41	C06.07	SEDIMENT AND STORMWATER MANAGEMENT SITE DETAILS AND NOTES
42	C06.08	SEDIMENT AND STORMWATER MANAGEMENT SITE DETAILS AND NOTES
43	C06.09	SEDIMENT AND STORMWATER MANAGEMENT SITE DETAILS AND NOTES
44	C06.10	POST CONSTRUCTION STORMWATER MANAGEMENT PLAN
45	C06.11	POST CONSTRUCTION STORMWATER MANAGEMENT PLAN
46	C06.12	POST CONSTRUCTION STORMWATER MANAGEMENT PLAN
47	C06.13	POST CONSTRUCTION STORMWATER MANAGEMENT PLAN
48	C07.01	SITE AND UTILITY PLANS
49	C07.02	SITE PLAN – ZONE 1 FIXED HEAD LAYOUT
50	C07.03	SITE PLAN – ZONE 2 FIXED HEAD LAYOUT
51	C07.04	SITE PLAN – ZONE 2 FIXED HEAD LAYOUT
52	C07.05	SITE PLAN – ZONE 2 FIXED HEAD LAYOUT
ARCHITECTURAL		
53	A00.01	ARCHITECTURAL ABBREVIATIONS AND LEGEND
54	A08.01	PUMP AND BLOWER BUILDING NO. 2 – PLAN
55	A08.02	PUMP AND BLOWER BUILDING NO. 2 – ELEVATIONS
56	A08.03	PUMP AND BLOWER BUILDING NO. 2 – ELEVATIONS
57	A08.04	PUMP AND BLOWER BUILDING NO. 2 – SECTIONS
58	A08.05	PUMP AND BLOWER BUILDING NO. 2 – WALL SECTIONS
59	A08.06	PUMP AND BLOWER BUILDING NO. 2 – SCHEDULES
60	A08.07	PUMP AND BLOWER BUILDING NO. 2 – DOOR DETAILS
61	A09.01	FILTERED IRRIGATION PUMP STATION – PLAN
62	A09.02	FILTERED IRRIGATION PUMP STATION – ELEVATIONS
63	A09.03	FILTERED IRRIGATION PUMP STATION – ELEVATIONS
64	A09.04	FILTERED IRRIGATION PUMP STATION – SECTION
65	A09.05	FILTERED IRRIGATION PUMP STATION – WALL SECTIONS
66	A09.06	FILTERED IRRIGATION PUMP STATION – SCHEDULES
67	A09.07	FILTERED IRRIGATION PUMP STATION – DOOR DETAILS
STRUCTURAL		
68	S00.01	GENERAL STRUCTURAL NOTES
69	S00.02	GENERAL STRUCTURAL NOTES AND TYPICAL DETAILS
70	S00.03	TYPICAL STRUCTURAL DETAILS
71	S00.04	TYPICAL STRUCTURAL DETAILS
72	S00.05	TYPICAL STRUCTURAL DETAILS
73	S00.06	TYPICAL STRUCTURAL DETAILS
74	S00.07	TYPICAL STRUCTURAL DETAILS
75	S01.01	NORTH HEADWORKS FOUNDATION PLAN
76	S01.02	NORTH HEADWORKS INTERMEDIATE PLAN
77	S01.03	NORTH HEADWORKS UPPER LEVEL PLAN
78	S01.04	NORTH HEADWORKS SECTIONS
79	S02.01	GRIT FACILITY FOUNDATION PLAN
80	S02.02	GRIT FACILITY INTERMEDIATE PLAN
81	S02.03	GRIT FACILITY UPPER LEVEL PLAN
82	S02.04	GRIT FACILITY SECTIONS
83	S02.05	GRIT FACILITY SECTIONS
84	S02.06	GRIT FACILITY SECTIONS
85	S03.01	AERATION DISTRIBUTION STATION FOUNDATION PLAN
86	S03.02	AERATION DISTRIBUTION STATION INTERMEDIATE SLAB PLAN
87	S03.03	AERATION DISTRIBUTION STATION STOP LOG PLAN AND DETAIL
88	S03.04	AERATION DISTRIBUTION STATION TOP PLAN
89	S03.05	AERATION DISTRIBUTION STATION SECTION
STRUCTURAL		
90	S03.06	AERATION DISTRIBUTION STATION SECTION
91	S03.07	AERATION DISTRIBUTION STATION SECTION
92	S05.01	CLARIFIER DISTRIBUTION BOX FOUNDATION PLAN
93	S05.02	CLARIFIER DISTRIBUTION BOX SECTIONS AND DETAIL
94	S08.01	PUMP AND BLOWER BUILDING NO.2 – FOUNDATION PLAN
95	S08.02	PUMP AND BLOWER BUILDING NO.2 – FIRST FLOOR PLAN
96	S08.03	PUMP AND BLOWER BUILDING NO.2 – ROOF FRAMING PLAN
97	S08.04	PUMP AND BLOWER BUILDING NO.2 – SECTIONS & DETAILS
98	S08.05	PUMP AND BLOWER BUILDING NO.2 – SECTIONS & DETAILS
99	S09.01	FILTERED IRRIGATION PUMPING STATION – FOUNDATION PLAN
100	S09.02	FILTERED IRRIGATION PUMPING STATION – FIRST FLOOR PLAN
101	S09.03	FILTERED IRRIGATION PUMPING STATION – ROOF FRAMING PLAN
102	S09.04	FILTERED IRRIGATION PUMPING STATION – SECTIONS & DETAILS
MECHANICAL		
103	M00.01	MECHANICAL NOTES, LEGEND, ABBREVIATIONS, AND DETAILS
104	M00.02	PROCESS FLOW SCHEMATIC
105	M00.03	DESIGN CRITERIA
106	M00.04	HYDRAULIC PROFILE
107	M00.05	SCHEDULES
108	M00.06	DETAILS
109	M00.07	DETAILS AND SCHEDULE
110	M00.08	DETAILS
111	M01.01	NORTH HEADWORKS PLAN
112	M01.02	NORTH HEADWORKS SECTIONS
113	M02.01	GRIT FACILITY LOWER LEVEL PLAN
114	M02.02	GRIT FACILITY UPPER LEVEL PLAN
115	M02.03	GRIT FACILITY SECTIONS
116	M02.04	GRIT FACILITY SECTIONS
117	M02.05	GRIT FACILITY SCHEMATIC
118	M03.01	AERATION DISTRIBUTION STRUCTURE PLAN AND SECTION
119	M04.01	AERATION LAGOONS 3 & 4 PLAN
120	M04.02	AERATION LAGOONS 3 & 4 SECTIONS AND DETAILS
121	M04.03	AERATION LAGOONS 3 & 4 PARTIAL PLANS AND SECTIONS
122	M04.04	AERATION LAGOONS 3 & 4 DETAILS
123	M04.05	EXISTING AERATION LAGOON 1 & 2 DISTRIBUTION BOX MODIFICATIONS
124	M05.01	CLARIFIER DISTRIBUTION BOX PLAN AND SECTIONS
125	M06.01	CLARIFIERS – UPPER AND LOWER PLANS
126	M06.02	CLARIFIERS – SECTIONS
127	M06.03	CLARIFIERS – SCUM PUMP STATION PLAN & SECTION
128	M07.01	PUMP & BLOWER BUILDING NO.1 – PLAN AND PARTIAL SECTION
129	M08.01	PUMP & BLOWER BUILDING NO.2 – PLANS
130	M08.02	PUMP & BLOWER BUILDING NO.2 – SECTIONS
131	M08.03	PUMP & BLOWER BUILDING NO.2 – PUMP CURVES AND SCHEMATICS
132	M09.01	FILTERED IRRIGATION PUMP STATION – PLAN
133	M09.02	FILTERED IRRIGATION PUMP STATION – HVAC AND SANITARY PLAN
134	M09.03	FILTERED IRRIGATION PUMP STATION – SECTIONS AND SCHEMATICS
135	M09.04	FILTERED IRRIGATION PUMP STATION – PUMP CURVES
136	M10.01	CHLORINE CONTACT TANK PARTIAL PLAN AND SECTION
137	M11.01	CHEMICAL BUILDING PLAN AND SCHEMATIC
138	M12.01	FILTRATION FACILITY PLANS
139	M12.02	FILTRATION FACILITY SECTIONS
140	M12.03	FILTRATION FACILITY SECTION AND PUMP CURVE
ELECTRICAL		
141	E00.01	ELECTRICAL LEGEND
142	E00.02	ELECTRICAL GENERAL NOTES AND ABBREVIATIONS
143	E00.03	ELECTRICAL OVERALL SITE PLAN
144	E00.03A	ELECTRICAL SITE PLAN – PART A
145	E00.04	ELECTRICAL SITE PLAN – PART B
146	E00.05	ELECTRICAL SITE PLAN – PART C
147	E00.06	EXISTING PUMP AND BLOWER BUILDING NO.1 – PARTIAL ONE LINE DIAGRAMS
148	E00.07	EXISTING PUMP AND BLOWER BUILDING – MCCPB ELEVATION AND FEEDER SCHEDULE
149	E00.08	PUMP AND BLOWER BUILDING NO. 2 ONE LINE DIAGRAM
150	E00.09	PUMP AND BLOWER BUILDING NO. 2 MCCB2 ELEVATION AND FEEDER SCHEDULE
151	E00.10	FILTERED IRRIGATION PUMP STATION ONE LINE DIAGRAM
152	E00.11	FILTERED IRRIGATION PUMP STATION MCCFI ELEVATION AND FEEDER SCHEDULE
153	E00.12	LIGHTING FIXTURE SCHEDULE
154	E00.13	ELECTRICAL PANEL SCHEDULES (EXISTING PANELS ON PBB1)
155	E00.14	ELECTRICAL PANEL SCHEDULES (NEW PANELS ON PBB2 & FIPS)
156	E00.15	ELECTRICAL PANEL SCHEDULES (FIPS GENERATOR & NEW CHEMICAL PUMP EX PANEL)
157	E00.16	ELECTRICAL DETAILS
158	E00.17	ELECTRICAL DETAILS
159	E00.18	ELECTRICAL DETAILS
160	E00.19	ELECTRICAL DETAILS
161	E00.20	ELECTRICAL DETAILS
162	E00.21	ELECTRICAL DETAILS
163	E00.22	ELECTRICAL DETAILS
164	E00.23	ELECTRICAL DETAILS
165	E00.24	ELECTRICAL DETAILS
166	E00.25	ELECTRICAL DETAILS
167	E00.26	ELECTRICAL DETAILS
168	E01.01	NORTH HEADWORKS POWER & LIGHTING PLAN
169	E02.01	GRIT FACILITY POWER & LIGHTING PLAN
170	E03.01	AERATION STRUCTURE POWER & LIGHTING PLAN
171	E04.01	AERATION LAGOONS POWER & LIGHTING PLAN
172	E06.01	CLARIFIERS POWER & LIGHTING PLANS
173	E06.02	CLARIFIERS – SCUM PUMP STATION POWER & LIGHTING PLANS
174	E07.01	EXISTING PUMP AND BLOWER BUILDING NO.1 – POWER PLAN
175	E08.01	PUMP AND BLOWER BUILDING NO.2 – POWER PLAN
176	E08.02	PUMP AND BLOWER BUILDING NO.2 – LIGHTING PLAN
177	E08.03	PUMP AND BLOWER BUILDING NO.2 – GROUNDING PLAN AND DIAGRAM
178	E09.01	FILTERED IRRIGATION PUMP STATION POWER PLAN
179	E09.02	FILTERED IRRIGATION PUMP STATION LIGHTING PLAN
ELECTRICAL		
180	E09.03	PUMP AND FILTER BUILDING GROUNDING PLAN
181	E09.04	UMP AND FILTER BUILDING GROUNDING RISER DIAGRAM
182	E10.01	ELECTRICAL BUILDING NO.2, CHLORINE CONTACT TANK & METERING VAULT POWER PLANS
183	E11.01	EXISTING CHEMICAL BUILDING POWER PLAN
184	E12.01	FILTRATION FACILITY POWER PLANS
185	E12.02	FILTRATION FACILITY POWER PLANS
186	E12.03	FILTRATION FACILITY DETAILS
INSTRUMENTATION		
187	I00.01	LEGENDS, ABBREVIATIONS, AND GENERAL NOTES (1 OF 2)
188	I00.02	LEGENDS, ABBREVIATIONS, AND GENERAL NOTES (2 OF 2)
189	I00.03	TYPICAL PCS PANEL CONTROL DIAGRAM AND PANEL ELEVATION
190	I00.04	INSTRUMENTATION DETAILS
191	I00.05	INSTRUMENTATION DETAILS (CONT.)
192	I00.06	FIBER OPTIC NETWORK SITE PLAN–DEMOLITION
193	I00.07	FIBER OPTIC NETWORK SITE PLAN–NEW WORK
194	I00.08	NETWORK ARCHITECTURE DIAGRAM
195	I00.09	NETWORK ARCHTECTURE DIAGRAM (CONT.)
196	I00.10	FIBER OPTIC DETAILS
197	I01.01	NORTH HEADWORKS BUILDING P&ID
198	I01.02	NORTH HEADWORKS BUILDING PLAN
199	I02.01	GRIT REMOVAL SYSTEM P&ID
200	I02.02	GRIT REMOVAL SYSTEM PLAN
201	I03.01	AERATION LAGOON DISTRIBUTION BOX P&ID
202	I03.02	AERATION LAGOON DISTRIBUTION BOX PLAN
203	I03.03	SUBMERSIBLE MIXER CONTROL DIAGRAMS
204	I04.01	AERATION LAGOON 3 AND 4 P&ID
205	I04.02	AERATION LAGOON 3 AND 4 PLAN
206	I06.01	CLARIFIERS & SCUM PUMPING STATION P&ID
207	I06.02	CLARIFIERS PLAN
208	I06.03	SCUM PUMPING STATION PLAN
209	I06.04	CLARIFIERS & SCUM PUMPING STATION CONTROL DIAGRAMS
210	I06.05	CLARIFIERS & SCUM PUMPING STATION PANEL ELEVATIONS
211	I07.01	PUMP & BLOWER BUILDING NO. 1 PLAN
212	I07.02	PUMP & BLOWER BUILDING NO. 1 CONTROL DIAGRAMS
213	I07.03	PUMP & BLOWER BUILDING NO. 1 LIGHTING CONTROL DIAGRAM
214	I08.01	PUMP & BLOWER BUILDING NO. 2 P&ID
215	I08.02	PUMP & BLOWER BUILDING NO. 2 PLAN
216	I08.03	RAS/WAS PUMP CONTROL DIAGRAMS
217	I08.04	PUMP & BLOWER BUILDING NO. 2 MISC. CONTROL DIAGRAMS
218	I09.01	FILTERED IRRIGATION PUMPING STATION P&ID
219	I09.02	FILTERED IRRIGATION PUMPING STATION P&ID (CONT.)
220	I09.03	FILTERED IRRIGATION PUMPING STATION PLAN
221	I09.04	FILTERED IRRIGATION PUMPS CONTROL DIAGRAMS
222	I09.05	TRANSFER PUMPS ELEMENTARY CONTROL DIAGRAMS
223	I09.06	FILTERED IRRIGATION PUMPING STATION VENTILATION CONTROL DIAGRAMS
224	I09.07	DRAINAGE PUMP STATION CONTROL DIAGRAMS
225	I09.08	FILTERED IRRIGATION BUILDING LIGHTING CONTROL DIAGRAMS
226	I10.01	CHLORINE CONTACT TANK & METERING VAULT P&ID
227	I10.02	CHLORINE CONTACT TANK PLAN
228	I10.03	CCT INTERMEDIATE PUMPS CONTROL DIAGRAMS
229	I11.01	EXISTING CHEMICAL BUILDING PLAN
230	I12.01	FILTRATION FACILITY P&ID
231	I12.02	FILTRATION FACILITY PLAN
232	I12.03	FILTRATION FACILITY EXHAUST FAN CONTROL DIAGRAMS

FACILITY/GROUP NO.

THE TWO DIGIT NUMBER THAT FOLLOWS THE LETTER DESIGNATING THE DISCIPLINE REPRESENTS THE FACILITY/GROUP NUMBER (SEE LIST BELOW).

M02.01
MECHANICAL — DWG. NUMBER
GRIT FACILITY

FACILITY/GROUP	NO.
GENERAL, NOTES, ABBREVIATIONS, LEGEND,DETAILS, SCHEDULES, AND PLANT SCHEMATICS	00
NORTH HEADWORKS	01
GRIT FACILITY	02
AERATION DISTRIBUTION STRUCTURE	03
AERATION LAGOONS	04
CLARIFIER DISTRIBUTION BOX	05
CLARIFIERS	06
PUMP AND BLOWER BUILDING NO. 1	07
PUMP AND BLOWER BUILDING NO. 2	08
FILTERED IRRIGATION PUMP STATION	09
CHLORINE CONTACT TANK	10
CHEMICAL BUILDING	11
FILTRATION FACILITY	12

REVISIONS

CLIENT INFORMATION

SUSSEX COUNTY, DE
ENGINEERING
DEPARTMENT

INLAND BAYS RWF
PHASE #2 EXPANSION:
CONTRACT S19-10

KEY PLAN

GRAPHIC SCALES

SIGNATURE

ALFRIED F. HINZ
GENERAL
No. 18956
DELAWARE
PROFESSIONAL ENGINEER
12/19

WRA
Whitman, Requardt & Associates, LLP
801 South Caroline Street, Baltimore, Maryland 21231

LIST OF DRAWINGS

DRAWING NO.

G01.01

SCALE: NONE		
DATE: JULY 2019	SHEET 2 OF 229	
DES: LAQ	DRAWN: MH	CHECK: DCC

N:\14256-028\CADD\14256028G01-01.dwg

GENERAL NOTES

1. ALL WORK SHALL BE COORDINATED WITH PLANT OPERATIONS.
2. NOTIFY "MISS UTILITY" AT LEAST THREE DAYS PRIOR TO STARTING WORK: 1-800-257-7777
3. HORIZONTAL CONTROLS ARE BASED ON DELAWARE STATE PLANE COORDINATE GRID NORTH AMERICAN DATUM OF 1983 (NAD 83/91).
4. VERTICAL CONTROLS ARE BASED ON THE NATIONAL GEODETIC VERTICAL DATUM (NGVD 88).
5. EXISTING SITE TOPOGRAPHY HAS BEEN DEVELOPED BY AERIAL SURVEY PERFORMED IN 2006 AND AUGMENTED BY FIELD SURVEY BY WR&A PERFORMED IN 2012.
6. ALL PIPE ELEVATIONS SHOWN ARE INVERT ELEVATIONS, UNLESS INDICATED OTHERWISE.
7. EXISTING UNDERGROUND UTILITIES SHOWN ON THE PLANS ARE FROM THE BEST AVAILABLE RECORDS AND ARE FOR THE CONTRACTORS CONVENIENCE. THERE IS NO GUARANTEE AS TO THEIR ACCURACY IN PLAN OR PROFILE. IT WILL BE THE CONTRACTORS RESPONSIBILITY TO VERIFY TO HIS OWN SATISFACTION. DURING DESIGN, THE DEPTH OF THE EXISTING UTILITIES WERE NOT DETERMINED. THE CONTRACTOR SHALL TEST PIT PRIOR TO PERFORMING ANY WORK. FIELD VERIFICATION SHALL INCLUDE HORIZONTAL LOCATIONS, ELEVATIONS, AND DIMENSIONS OF EXISTING UTILITIES BEFORE ORDERING AND/OR FABRICATION OF ANY MATERIALS. THE CONTRACTOR SHALL TAKE ALL NECESSARY PRECAUTIONS TO PROTECT THE EXISTING UTILITIES AND MAINTAIN UNINTERRUPTED SERVICE. ANY UTILITY, WHETHER SHOWN OR NOT, THAT IS DAMAGED BY THE CONTRACTOR SHALL BE REPAIRED IMMEDIATELY AT NO EXPENSE TO THE OWNER. SHOULD THE CONTRACTOR DISCOVER DISCREPANCIES BETWEEN THE PLANS AND THE FIELD CONDITIONS, THE OWNER IS TO BE NOTIFIED IMMEDIATELY. SHOULD THE CONTRACTOR MAKE FIELD CORRECTIONS OR ADJUSTMENTS WITHOUT THE AUTHORIZATION OF THE OWNER, THEN THE CONTRACTOR ASSUMES THE RESPONSIBILITY FOR SAID CORRECTIONS OR ADJUSTMENTS.
8. ALL CONSTRUCTION STAKEOUT SHALL BE PROVIDED BY THE CONTRACTOR. IF DISCREPANCIES EXIST BETWEEN THE CONTRACT DOCUMENTS AND THE FIELD CONDITIONS WHEN FIELD VERIFIED UTILITY LOCATIONS AND\OR ELEVATIONS INDICATE A CONFLICT WITH THE CONTRACT WORK, THE CONTRACTOR SHALL ADVISE THE ENGINEER OF A PROPOSED RESOLUTION.
9. REFER TO ELECTRICAL DRAWINGS FOR ELECTRICAL SYMBOLS AND ABBREVIATIONS.
10. REFER TO MECHANICAL DRAWINGS FOR HVAC AND PLUMBING SYMBOLS AND ABBREVIATIONS.
11. LIMITS OF CONTRACT SHALL BE AS SHOWN ON DRAWINGS.
12. ALL DISTURBED AREAS SHALL BE RETURNED TO THEIR ORIGINAL CONDITIONS OR BETTER.
13. ALL EROSION AND SEDIMENT CONTROL PRACTICES SHALL BE AS PER EROSION AND SEDIMENT CONTROL PLANS, NOTES AND DETAILS.
14. CONTRACTOR SHALL SECURE SITES REQUIRED FOR STORAGE AND STOCKPILING OF CONSTRUCTION AND STOCKPILE MATERIALS. SITES ARE TO BE PROTECTED FROM EROSION PER THE EROSION AND SEDIMENT CONTROL PLANS.
15. ALL DISTURBED AREAS NOT PAVED OR SODDED SHALL BE FINE GRADED AND SHALL HAVE TOPSOIL, SEED, FERTILIZER, LIME AND MULCH IN ACCORDANCE WITH THE STANDARD SPECIFICATIONS AND SEEDING NOTES ON THE EROSION AND SEDIMENT CONTROL NOTES AND DETAILS SHEET.
16. THE CONTRACTOR SHALL VERIFY DIMENSIONS OF EXISTING PIPE PRIOR TO THE PURCHASE OF CONNECTING PIPE AND FITTINGS.
17. SOIL BORINGS HAVE BEEN TAKEN. THE LOCATIONS ARE SHOWN ON THE PLANS AND THE DATA ARE INCLUDED IN THE SPECIFICATIONS.
18. ANY SOIL OR BORROW MATERIAL SHALL EITHER BE DISPOSED OF ON-SITE IF FINE SCREENED OR HAULED OFF-SITE TO AN APPROVED CONTROLLED SITE.

ABBREVIATIONS (1.)

ALE	AERATED LAGOON EFFLUENT
ALP	AIR LOW PRESSURE
CE	CHLORINATED EFFLUENT
EX	EXISTING
FE	FILTERED EFFLUENT
FM	FORCE MAIN
GFE	GRIT FACILITY EFFLUENT
GP	GRINDER PUMP
N.I.C.	NOT IN CONTRACT
PE	PLANT EFFLUENT
PW	POTABLE WATER
RAS	RETURN ACTIVATED SLUDGE
RS	RAW SEWAGE
SCE	SECONDARY CLARIFIER EFFLUENT
S	SANITARY DRAIN/SEWER
SD	STORM DRAIN
SE	SCREENED EFFLUENT
SHC	SODIUM HYPOCHLORITE
SPD	SUMP PUMP DISCHARGE
UT	UTILITY WATER
WAS	WASTE ACTIVATED SLUDGE
WP	WORKING POINT
WSD	WASTE SLUDGE DECANT
WSH	WASTE SLUDGE HOLDING

(1.) SEE GENERAL NOTES 9 AND 10.

LEGEND

EXISTING

- RIGHT-OF-WAY
- PROPERTY LINE
- CONTOUR — 45
- DITCH CENTERLINE
- WOODS LINE
- EDGE OF PAVING
- ROAD SIGN
- FENCE — X
- LIGHTPOLE
- UTILITY POLE AND WITH GUY WIRE
- ELECTRIC LINE (UNDERGROUND) — E
- SANITARY SEWER — S
- SANITARY FORCE MAIN — FM
- WATER LINE — W
- PROCESS PIPING — EX. 4" WAS
- BUILDING, STRUCTURE, ETC.
- SPOT ELEVATION (FIELD RUN) — 35.26
- SPOT ELEVATION (AERIAL) — 35.26
- TRAVERSE POINT
- WATER VALVE
- ELECTRICAL MANHOLE — E
- HYDRANT
- MINOR CONTOUR
- MAJOR CONTOUR — 25
- STONE ROAD
- SOIL BORING

PROPOSED

- PIPE SMALLER THAN 12"
- PIPE 12" OR LARGER
- LIMIT OF DISTURBANCE — LOD
- MINOR CONTOUR
- MAJOR CONTOUR — 235
- SILT FENCE — SF
- NEW CONCRETE
- NEW ASPHALT ROAD (BY OTHERS)
- NEW ASPHALT ROAD
- ABANDON TICKS
- REMOVAL TICKS
- SPOT ELEVATION — 35.26
- SW FLOW DIRECTION ARROWS
- FLOW DIRECTION ARROWS
- TOP OF SLAB ELEVATION
- STONE ROAD

LEGEND

X1 / X-4 PLAN TITLE
SCALE: __"=__'-__"
OR
SCALE: NONE

X1 / X-4 ELEVATION TITLE
SCALE: __"=__'-__"
OR
SCALE: NONE

X1 / X-4 DETAIL TITLE
SCALE: __"=__'-__"
OR
(SCALE: NONE)

X3 / X-4 SECTION TITLE
SCALE: __"=__'-__"
OR
(SCALE: NONE)

X1 / X-4 SCHEMATIC TITLE
SCALE: NONE

X3 / X-4 SECTION MARKS SYMBOL

X1 – DESIGNATION OF PLAN, SCHEMATIC, AND DETAIL (1, 2, 3,..)
X3 – DESIGNATION OF SECTION (A, B, C,..)
X-4 – DRAWING WHERE SECTION / DETAIL / SCHEMATIC / PLAN IS DRAWN (M01.01, S01.02,..)

C:\Users\whinz\appdata\local\temp\AcPublish_9636\14256026G02-01.dwg

REVISIONS

CLIENT INFORMATION

SUSSEX COUNTY, DE
ENGINEERING
DEPARTMENT

INLAND BAYS RWF
PHASE #2 EXPANSION:
CONTRACT S19-10

KEY PLAN

GRAPHIC SCALES

SIGNATURE

WILFRIED F. HINZ
CERTIFIED
No. 18956
7/19/19
DELAWARE
PROFESSIONAL ENGINEER

Whitman, Requardt & Associates, LLP
801 South Caroline Street, Baltimore, Maryland 21231

GENERAL NOTES,
ABBREVIATIONS, AND LEGEND

DRAWING NO.

G02.01

SCALE: NONE		
DATE: JULY 2019	SHEET 3	OF 229
DES: LAQ	DRAWN: MH	CHECK: DCC

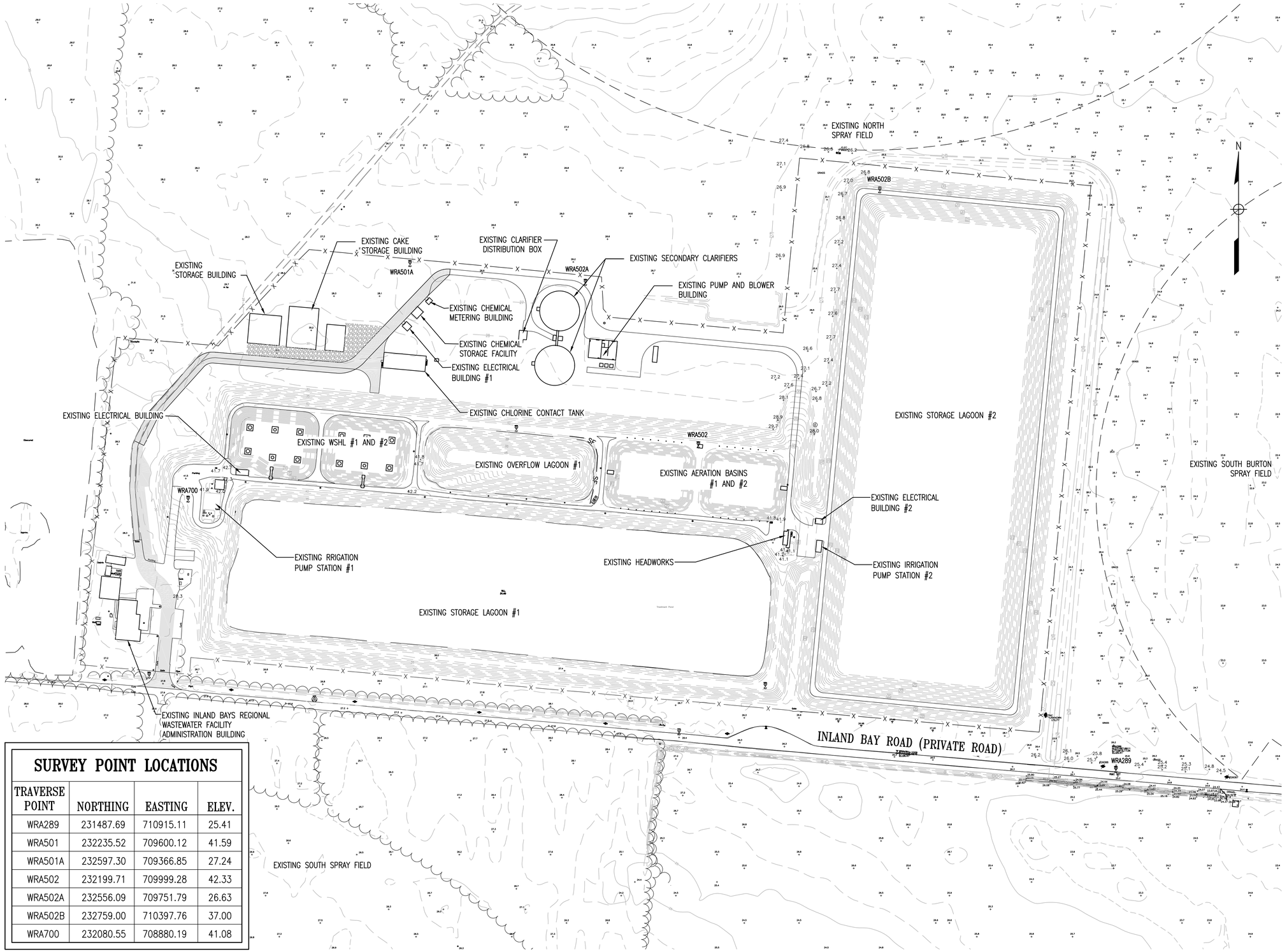

SURVEY POINT LOCATIONS

TRAVERSE POINT	NORTHING	EASTING	ELEV.
WRA289	231487.69	710915.11	25.41
WRA501	232235.52	709600.12	41.59
WRA501A	232597.30	709366.85	27.24
WRA502	232199.71	709999.28	42.33
WRA502A	232556.09	709751.79	26.63
WRA502B	232759.00	710397.76	37.00
WRA700	232080.55	708880.19	41.08

1 G03.01 EXISTING SITE PLAN
SCALE: 1" = 100'

N:\14256-0026\CADD\14256026G03-F01.dwg

REVISIONS

CLIENT INFORMATION

SUSSEX COUNTY, DE
ENGINEERING
DEPARTMENT

INLAND BAYS RWF
PHASE #2 EXPANSION:
CONTRACT S19-10

KEY PLAN

GRAPHIC SCALES

0 50' 100' 200'
SCALE: 1" = 100'

SIGNATURE

ALFRIED F. WHITMAN
No. 18956
DELAWARE
PROFESSIONAL ENGINEER

Whitman, Requardt & Associates, LLP
801 South Caroline Street, Baltimore, Maryland 21231

FACILITIES AND UTILITIES
STAKEOUT DATA

DRAWING NO.

G03.01

SCALE:		
DATE: DEC. 2018	SHEET 4 OF 217	
DES: WFH	DRAWN: FJB	CHECK: WFH

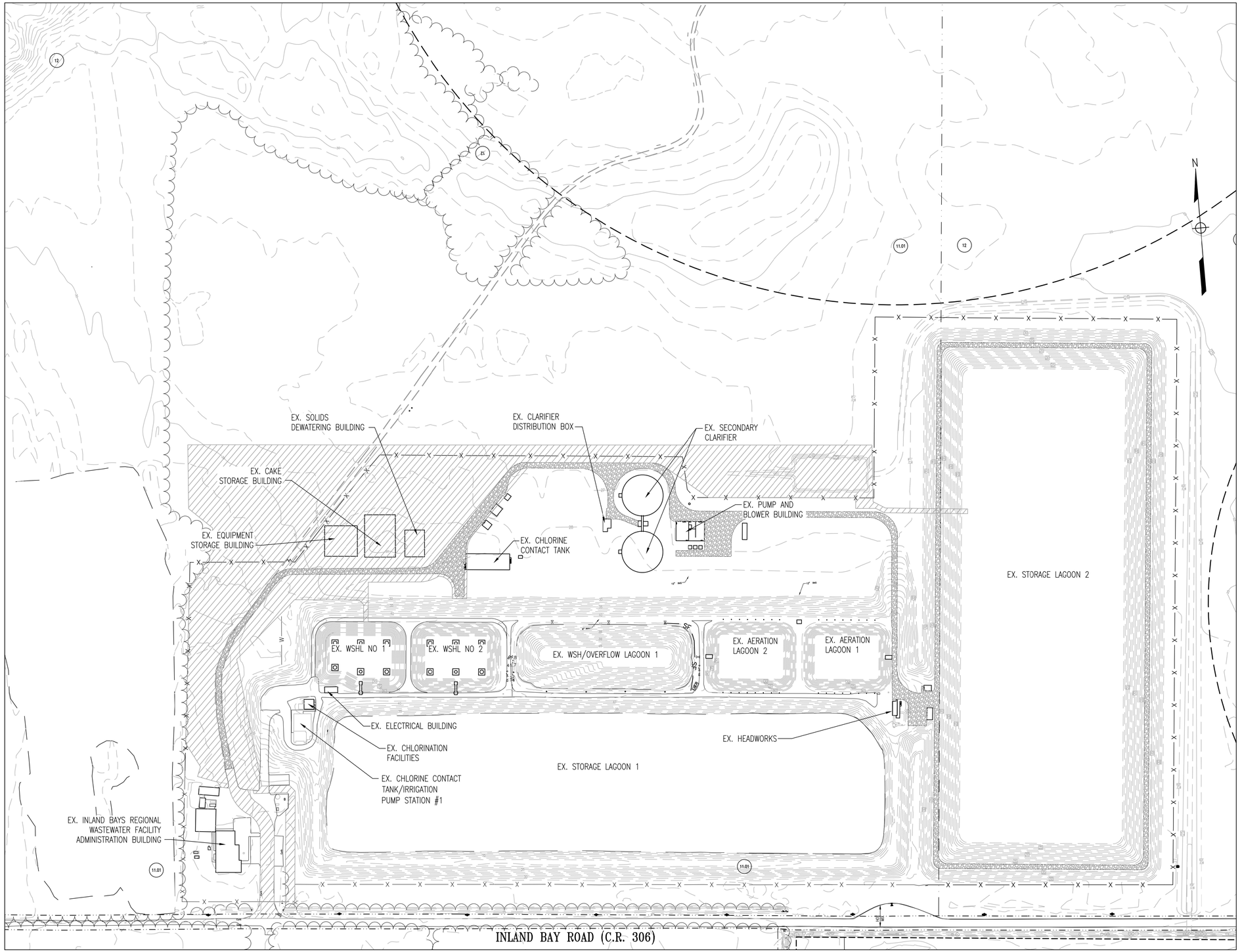

PROJECT EXTENTS OF CONTRACT 18-19

1 C00.01 EXISTING SITE PLAN
SCALE: 1" = 100'

C:\Users\jmoyer\appdata\local\temp\AcPublish_564\14256026C0-01.dwg

REVISIONS

CLIENT INFORMATION

SUSSEX COUNTY, DE
ENGINEERING
DEPARTMENT

INLAND BAYS RWF
PHASE #2 EXPANSION:
CONTRACT S19-10

KEY PLAN

GRAPHIC SCALES

0 50' 100' 200'
SCALE: 1" = 100'

SIGNATURE

WILFRIED F. HINZ
LICENSED
No. 18956
7/9/19
DELAWARE
PROFESSIONAL ENGINEER

WRA
Whitman, Requardt & Associates, LLP
801 South Caroline Street, Baltimore, Maryland 21231

EXISTING SITE PLAN

DRAWING NO.

C00.01

SCALE: AS SHOWN
DATE: JULY 2019 | SHEET 9 OF 229
DES: FJB | DRAWN: JAM | CHECK: WFH

EX. 12" FM
EX. 2" ELEC
EX. 6" FM
EX. CAKE STORAGE BUILDING
EX. EQUIPMENT STORAGE BUILDING
EX. SOLIDS DEWATERING BUILDING
EX. 30" CE
EX. 36" CE
EX. CHLORINE CONTACT TANK
EX. 4" UT
EX. CHEMICAL METERING BUILDING
EX. CHEMICAL STORAGE FACILITY
EX. ELECTRICAL BUILDING #2
EX. SECONDARY CLARIFIER
EX. SECONDARY CLARIFIER
EX. PUMP AND BLOWER BUILDING
EX. WSHL NO.1
EX. WSHL NO.2
EX. WSH/OVERFLOW LAGOON 1
EX. AERATION LAGOON 2
EX. AERATION LAGOON 1
GRASS
12" RAS
6" WAS
EX. 4" W
EX. ELEC DUCT
FIL ELEC DUCT

DEMOLITION NOTES

1. REMOVE EXISTING CHAINLINK FENCE.
2. FENCE TO BE REMOVED BY OTHERS (CONTRACT 18-19).
3. EXISTING UTILITIES TO BE ABANDONED BY OTHERS (CONTRACT 18-19).
4. SEE DWG. C01.02 FOR ENLARGED VIEW.
5. REPLACE TWO EXISTING MIXERS WITH AERATORS PRE-PURCHASED BY THE OWNER WITHIN EACH EXISTING WASTE SLUDGE HOLDING LAGOON NO. 1 AND NO. 2 (A TOTAL OF 4). REFER TO SPECIFICATION SECTION 11385.
6. REMOVE EX. 4" UT.

1 DEMOLITION PLAN
C01.01 SCALE: 1" = 60'

PROJECT EXTENTS OF CONTRACT 18-19

REVISIONS		

CLIENT INFORMATION

SUSSEX COUNTY, DE
ENGINEERING
DEPARTMENT

INLAND BAYS RWF
PHASE #2 EXPANSION:
CONTRACT S19-10

KEY PLAN

GRAPHIC SCALES

0 30' 60' 120'
SCALE: 1" = 60'

SIGNATURE

FRIED F. HINDS
No. 18956
DELAWARE
PROFESSIONAL ENGINEER

Whitman, Requardt & Associates, LLP
801 South Caroline Street, Baltimore, Maryland 21231

DEMOLITION PLAN

DRAWING NO.

C01.01

SCALE: AS SHOWN		
DATE: JULY 2019	SHEET 10 OF 229	
DES: FJB	DRAWN: JAM	CHECK: WFH

C:\Users\whinz\appdata\local\temp\AcPublish_9636\1425602BC1-01.dwg

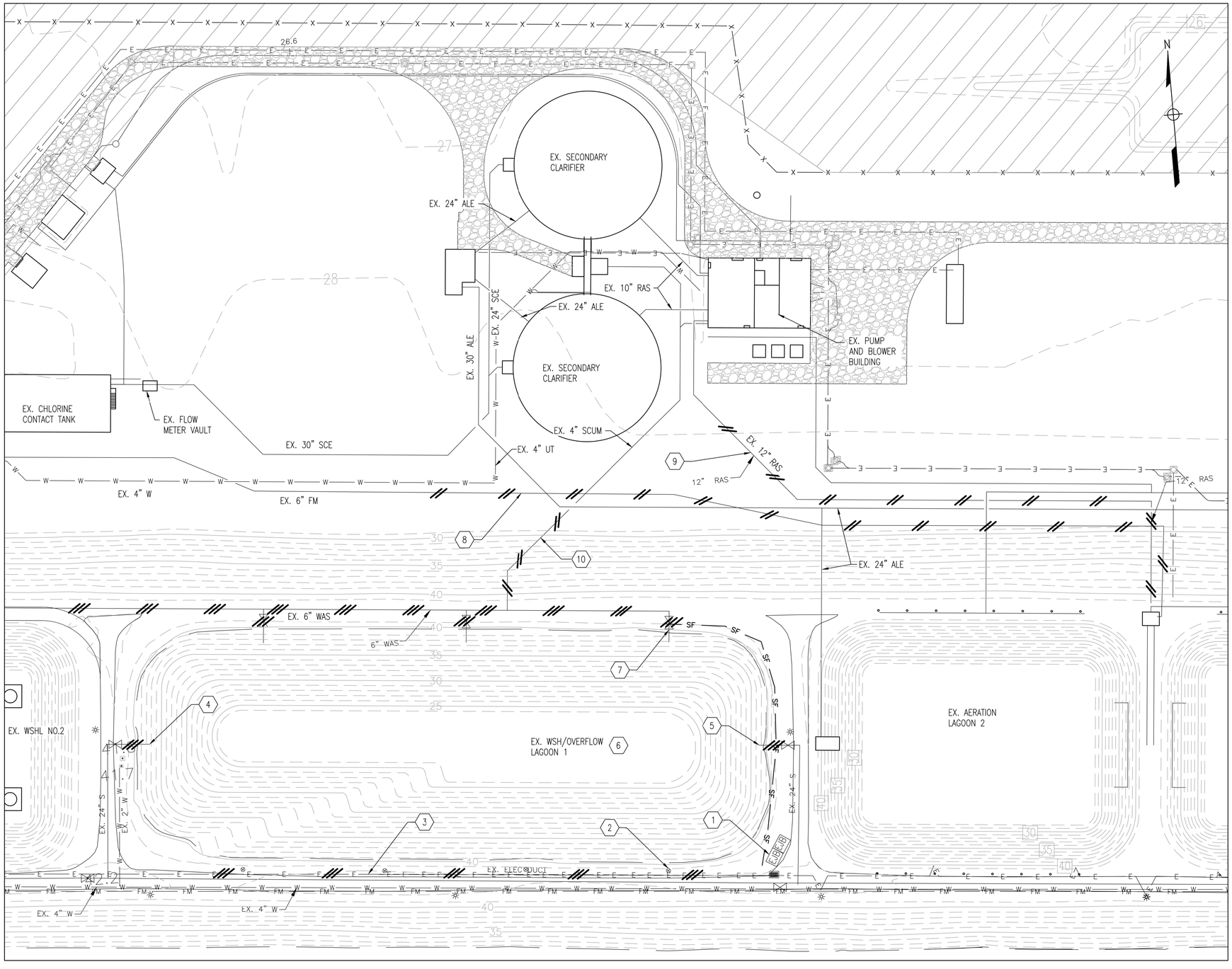

1 C01.02 DEMOLITION PLAN
SCALE: 1" = 30'

GENERAL DEMOLITION NOTES

1. INSTALL MECHANICAL JOINT PLUG OR CAP AT END OF ALL UTILITIES TO BE ABANDONED IN PLACE.

(X) DEMOLITION NOTES

1. REMOVE EXISTING JUNCTION BOXES (TYP.) AS REQUIRED TO INSTALL NEW LINER.
2. REMOVE EXISTING AERATOR SUPPORTS (TYP.) AS REQUIRED TO INSTALL NEW LINER.
3. REMOVED EXISTING DUCTBANK AS REQUIRED TO INSTALL NEW LINER.
4. REMOVED EXISTING CONCRETE LAGOON OUTLET STRUCTURE AND 24" PIPE AS REQUIRED TO INSTALL NEW LINER.
5. REMOVED EXISTING CONCRETE LAGOON INLET STRUCTURE AND 24" PIPE AS REQUIRED TO INSTALL NEW LINER.
6. REMOVE EXISTING LAGOON LINING SYSTEM THROUGH ENTIRE EXISTING OVERFLOW LAGOON #1, INCLUDING BENTOMAT. DISPOSE OF EXISTING BENTOMAT OFF-SITE. SEE DETAIL C05.01-D ON DWG. C05.01 FOR EXISTING LINING DETAIL.
7. REMOVE EXISTING 6" WAS PIPE AND PLUG VALVES (TYP. OF 3) TO OVERFLOW LAGOON #1.
8. ABANDON EXISTING 6" FORCE MAIN IN PLACE. REMOVE SECTIONS AS NECESSARY WHEN INSTALLING PROPOSED UTILITIES.
9. ABANDON EXISTING 12" RAS LINE IN PLACE.
10. ABANDON EXISTING 4" SCUM LINE IN PLACE. REMOVE SECTIONS AS NECESSARY WHEN INSTALLING PROPOSED UTILITIES.

REVISIONS		

CLIENT INFORMATION

SUSSEX COUNTY, DE
ENGINEERING
DEPARTMENT

INLAND BAYS RWF
PHASE #2 EXPANSION:
CONTRACT S19-10

KEY PLAN

GRAPHIC SCALES

0 15' 30' 60'
SCALE: 1" = 30'

SIGNATURE

WILLFRIED F. HINZ
ENGINEER
No. 18956
DELAWARE
PROFESSIONAL ENGINEER

Whitman, Requardt & Associates, LLP
801 South Caroline Street, Baltimore, Maryland 21231

DEMOLITION PLAN

DRAWING NO.

C01.02

SCALE: AS SHOWN		
DATE: JULY 2019	SHEET 11 OF 229	
DES: FJB	DRAWN: JAM	CHECK: WFH

C:\Users\whinz\appdata\local\temp\AcPublish_9636\14256026C1-01.dwg

X CONSTRUCTION NOTES

1. ALL FACILITIES INDICATED AS NIC ARE PART OF CONTRACT 18-19. COORDINATE CONSTRUCTION WITH CONTRACT 18-19.

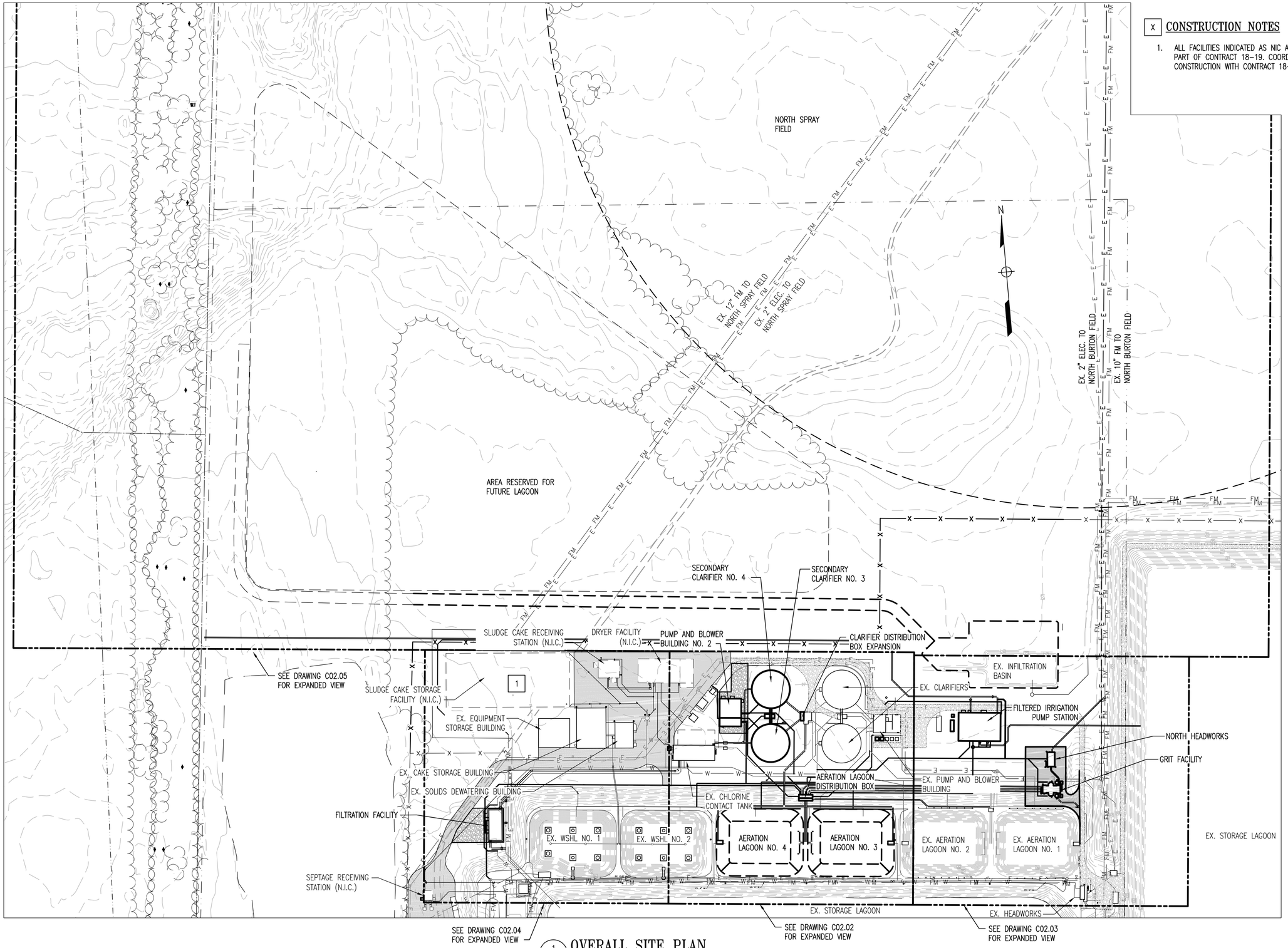

1 C02.01 OVERALL SITE PLAN
SCALE: 1" = 100'

C:\Users\whinz\appdata\local\temp\AcPublish_9636\142560202-01.dwg

REVISIONS		

CLIENT INFORMATION

SUSSEX COUNTY, DE
ENGINEERING
DEPARTMENT

INLAND BAYS RWF
PHASE #2 EXPANSION:
CONTRACT S19-10

KEY PLAN

GRAPHIC SCALES

0 50' 100' 200'
SCALE: 1" = 100'

SIGNATURE

MILFRIED F. HINZ
LICENSED
No. 18956
7/9/19
DELAWARE
PROFESSIONAL ENGINEER

Whitman, Requardt & Associates, LLP
801 South Caroline Street, Baltimore, Maryland 21231

OVERALL SITE PLAN

DRAWING NO.

C02.01

SCALE: AS SHOWN		
DATE: JULY 2019	SHEET 12 OF 229	
DES: FJB	DRAWN: JAM	CHECK: WFH

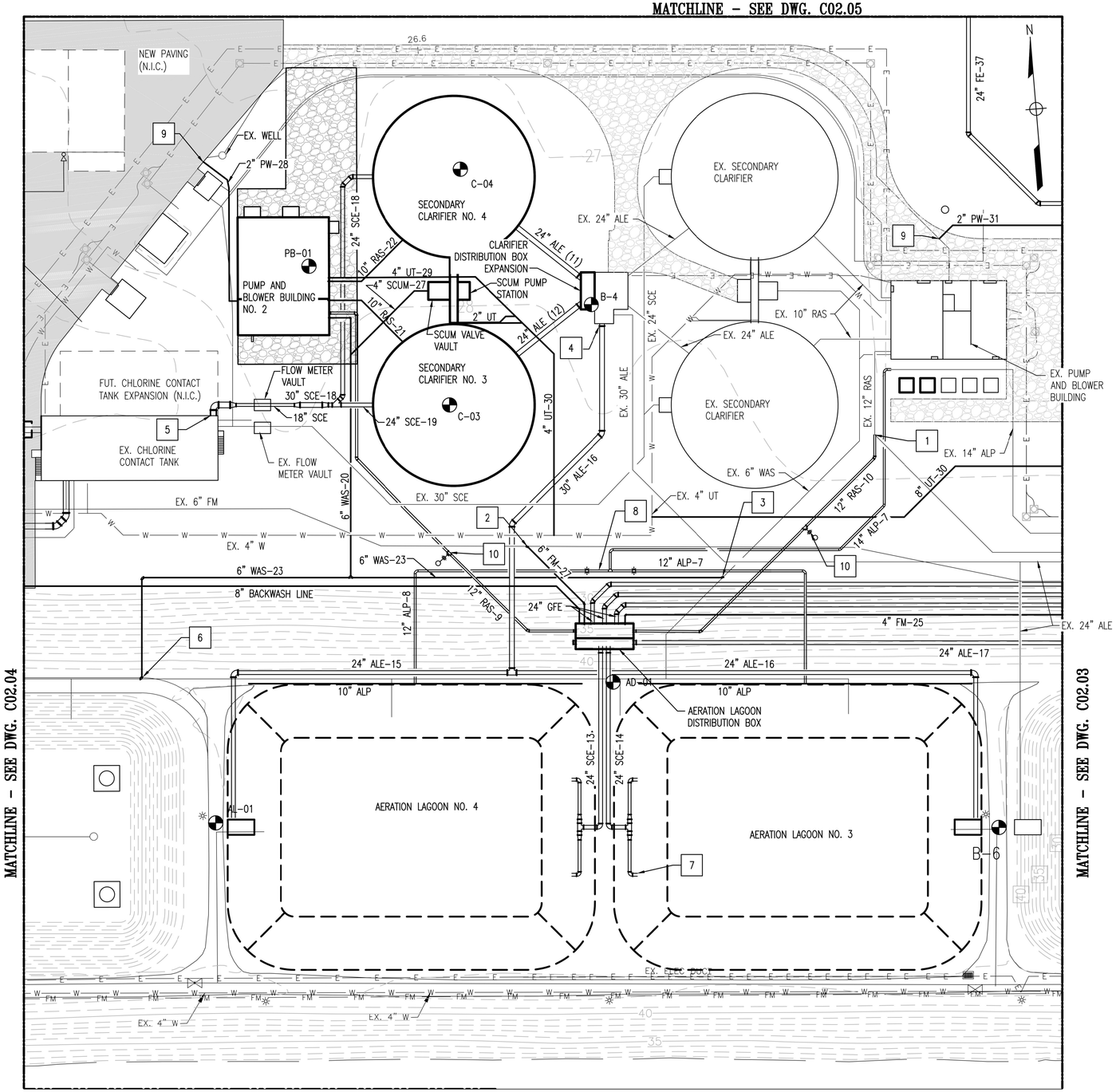

1 C02.02 SITE AND UTILITY PLAN
SCALE: 1" = 30'

X CONSTRUCTION NOTES

1. REMOVED EXISTING 45° HB AND CONNECT TO EXISTING 12" RAS LINE.
2. CONNECT TO EXISTING 6" FM WITH 45° HB.
3. CONNECT TO EXISTING 6" WAS WITH 45° HB.
4. REMOVE EXISTING CAP AND CONNECT TO CLARIFIER DISTRIBUTION BOX WALL CASTING.
5. CORE INTO EXISTING CHLORINE CONTACT TANK.
6. CONNECT TO EXISTING 6" WAS LINE WITH 90° HB.
7. SEE DETAIL C05.01-G AND C05.01-H FOR LAGOON LINER PENETRATION (TYP.).
8. REFER TO DWG. M04.02 FOR ABOVE GRADE PROCESS AIR FLOW METER AND VALVE ARRANGEMENT.
9. CONNECT TO EXISTING WATER LINE.
10. PROVIDE QUICK CONNECT FOR FLOW DIVERSION ASSEMBLY. SEE DETAIL C05.02-D.

REVISIONS

CLIENT INFORMATION

SUSSEX COUNTY, DE
ENGINEERING
DEPARTMENT

INLAND BAYS RWF
PHASE #2 EXPANSION:
CONTRACT S19-10

KEY PLAN

GRAPHIC SCALES

0 15' 30' 60'
SCALE: 1" = 30'

SIGNATURE



Whitman, Requardt & Associates, LLP
801 South Caroline Street, Baltimore, Maryland 21231

SITE AND UTILITY PLAN

DRAWING NO.

C02.02

SCALE: AS SHOWN		
DATE: JULY 2019	SHEET 13 OF 229	
DES: FJB	DRAWN: JAM	CHECK: WFH

C:\Users\whinx\appdata\local\temp\AcPublish_9636\1425802&C2-01.dwg

MATCHLINE - SEE DWG. C02.05

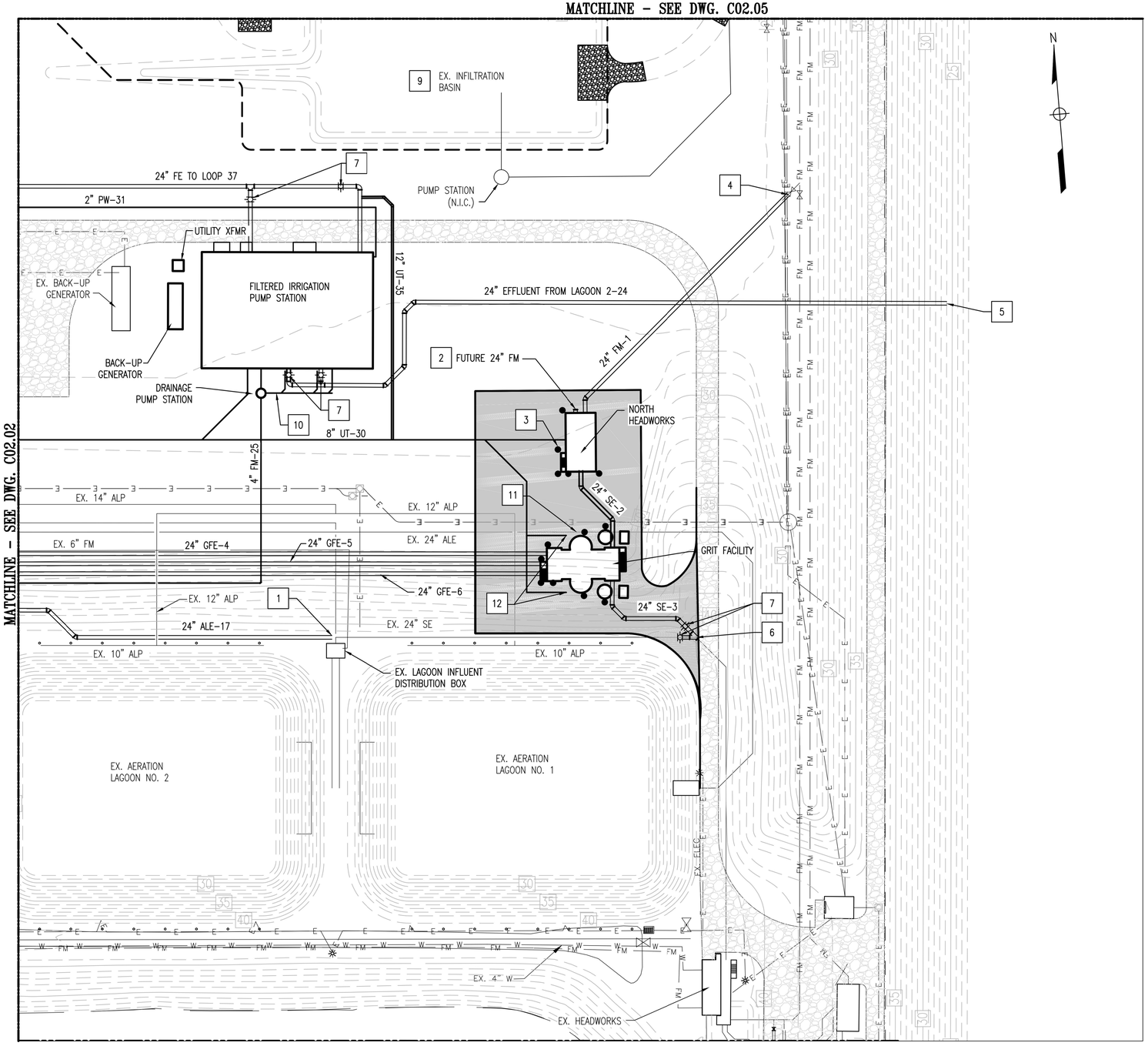

1 C02.03 SITE AND UTILITY PLAN
SCALE: 1" = 30'

X CONSTRUCTION NOTES

1. REMOVE EXISTING CAP AND CONNECT TO TEE.
2. PROVIDE CAP FOR FUTURE EXTENSION.
3. PROVIDE BOLLARD (TYP.). SEE DETAIL S00.05-C.
4. REMOVE EXISTING PLUG AND CONNECT TO EXISTING 24" GATE VALVE.
5. SEE DETAIL C05.01-G AND C05.01-H FOR LAGOON LINER PENETRATION (TYP.).
6. REMOVE EXISTING 45° HB AND CONNECT TO 24" SE LINE WITH 24" WYE AND SOLID SLEEVE.
7. INSTALL 24" PLUG VALVE. SEE DETAIL C05.02-B.
8. SEE ELECTRICAL DRAWINGS.
9. INSTALL PROPOSED WET POND. SEE DWG. C06.11 FOR DETAILS.
10. SEE MECHANICAL DWG. M09.02 FOR 4" DRAIN LINE.
11. CONCRETE ENCASE EX. 24" ALE LINE FOR 60 LF IN VICINITY OF GIRT FACILITY PRIOR TO GRADING.
12. SEE MECHANICAL FOR CONTINUATION OF UTILITY WATER LINE.

REVISIONS

CLIENT INFORMATION

SUSSEX COUNTY, DE
ENGINEERING
DEPARTMENT

INLAND BAYS RWF
PHASE #2 EXPANSION:
CONTRACT S19-10

KEY PLAN

GRAPHIC SCALES

0 15' 30' 60'
SCALE: 1" = 30'

SIGNATURE

ALFRIED F. HINES III LICENSED No. 18956 DELAWARE PROFESSIONAL ENGINEER

Whitman, Requardt & Associates, LLP
801 South Caroline Street, Baltimore, Maryland 21231

SITE AND UTILITY PLAN

DRAWING NO.

C02.03

SCALE: AS SHOWN		
DATE: JULY 2019	SHEET 14 OF 229	
DES: FJB	DRAWN: JAM	CHECK: WFH

C:\Users\whinz\appdata\local\temp\AcPublish_9636\142560262C2-01.dwg

MATCHLINE - SEE DWG. C02.05

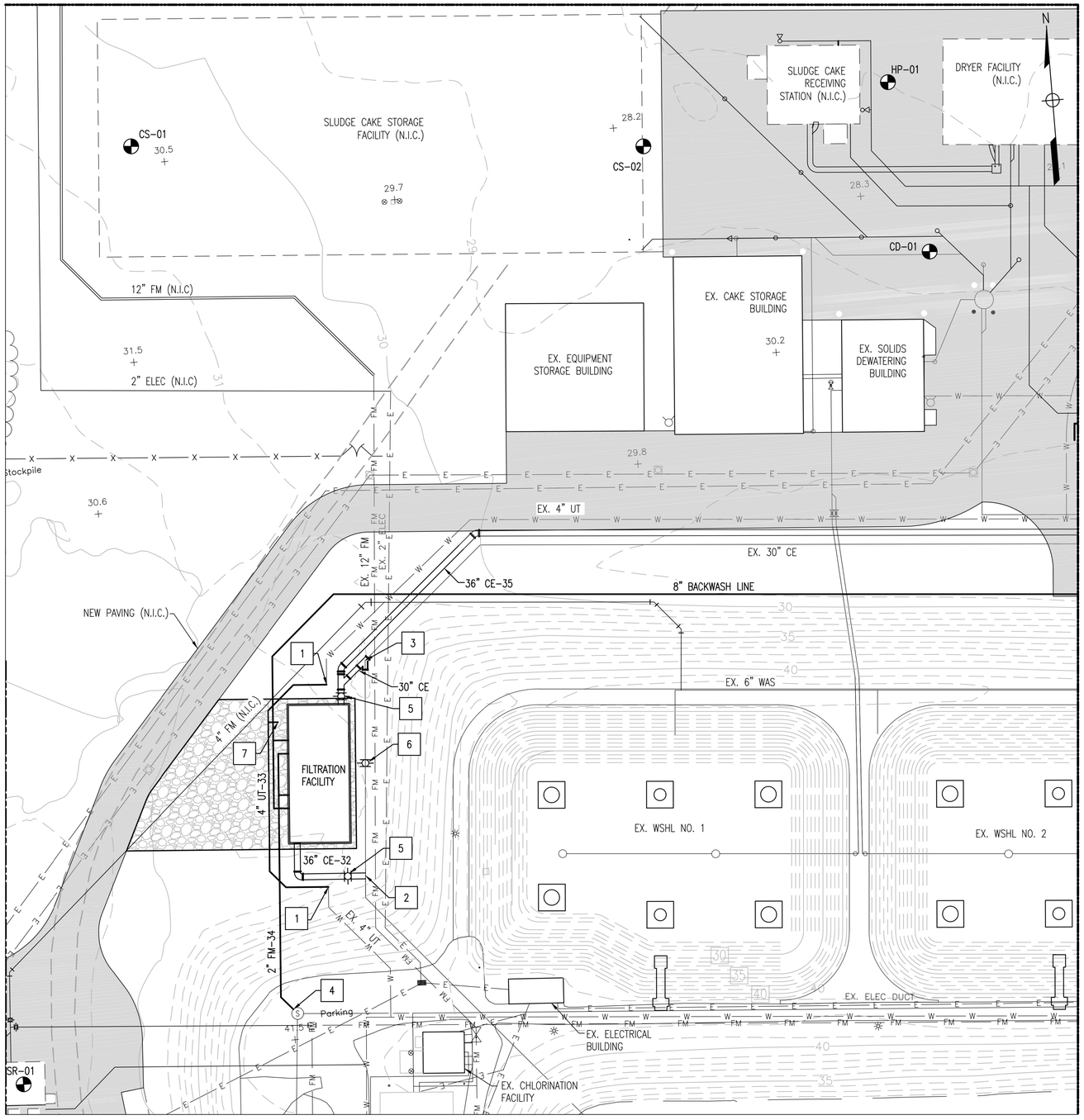

MATCHLINE - SEE DWG. C02.02

1 C02.04 SITE AND UTILITY PLAN
SCALE: 1" = 30'

X CONSTRUCTION NOTES

1. CONNECT TO EXISTING 4" UTILITY WATER WITH 90° H.B.
2. REMOVE EXISTING 36" PLUG FROM 36"X48" TEE AND CONNECT TO TEE.
3. CONNECT TO EXISTING 30° CE BY REPLACING EXISTING 30" 45° H.B. WITH 30"X30" WYE WITH SOLID SLEEVE AND SPACER.
4. CORE INTO EXISTING MANHOLE. SEE DETAIL C05.02-E FOR TRANSITION FROM HDPE TO MANHOLE DETAIL.
5. INSTALL 36" PLUG VALVE. SEE DETAIL C05.05-B.
6. INSTALL 30" PLUG VALVE IN EXISTING 30" CE WITH SOLID SLEEVE AND SPACER. SEE DETAIL C05.02-B.
7. SEE MECHANICAL FOR WATER LINE CONNECTION AND YARD HYDRANT.

REVISIONS		

CLIENT INFORMATION

SUSSEX COUNTY, DE
ENGINEERING
DEPARTMENT

INLAND BAYS RWF
PHASE #2 EXPANSION:
CONTRACT S19-10

KEY PLAN

GRAPHIC SCALES

0 15' 30' 60'
SCALE: 1" = 30'

SIGNATURE

WILFRIED F. HINK
LICENSED
No. 18956
7/19/19
DELAWARE
PROFESSIONAL ENGINEER

Whitman, Requardt & Associates, LLP
801 South Caroline Street, Baltimore, Maryland 21231

SITE AND UTILITY PLAN

DRAWING NO.

C02.04

SCALE: AS SHOWN		
DATE: JULY 2019		SHEET 15 OF 229
DES: FJB	DRAWN: JAM	CHECK: WFH

C:\Users\whinx\appdata\local\temp\AcPublish_9636\142560262C2-01.dwg

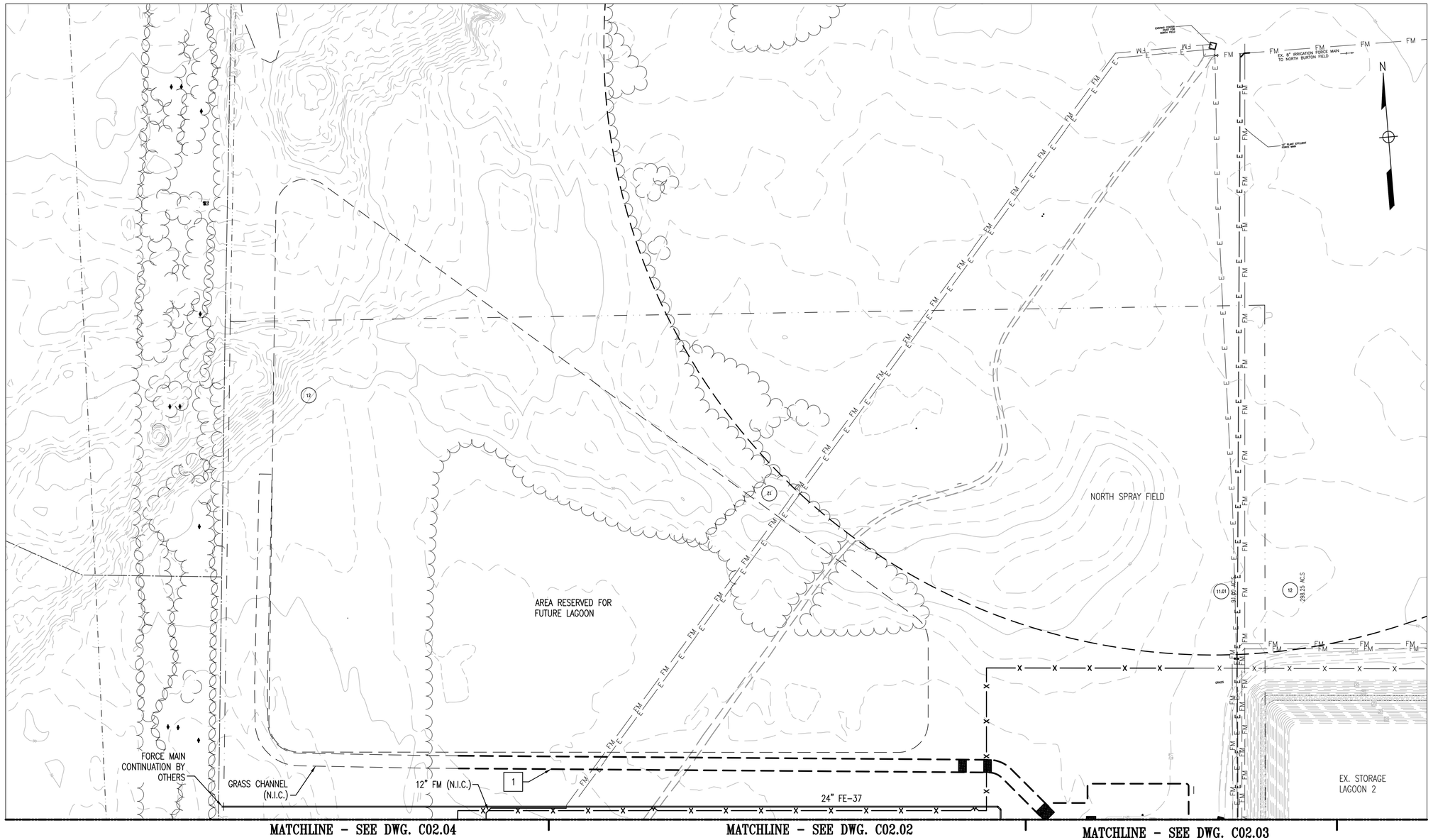

1 / C02.05 SITE AND UTILITY PLAN
SCALE: 1" = 100'

X CONSTRUCTION NOTES

1. PROPOSED GRASSED CHANNEL. SEE DWG. C06.10 FOR DETAILS.

REVISIONS		

CLIENT INFORMATION

SUSSEX COUNTY, DE
ENGINEERING
DEPARTMENT

INLAND BAYS RWF PHASE #2 EXPANSION: CONTRACT S19-10

KEY PLAN

GRAPHIC SCALES

0 50' 100' 200'
SCALE: 1" = 100'

SIGNATURE

ALFRIED F. FINK
No. 18956
DELAWARE
PROFESSIONAL ENGINEER

Whitman, Requardt & Associates, LLP
801 South Caroline Street, Baltimore, Maryland 21231

SITE AND UTILITY PLAN

DRAWING NO.

C02.05

SCALE: AS SHOWN		
DATE: JULY 2019	SHEET 16 OF 229	
DES: FJB	DRAWN: JAM	CHECK: WFH

C:\Users\whinz\appdata\local\temp\AcPublish_9636\142560262-01.dwg

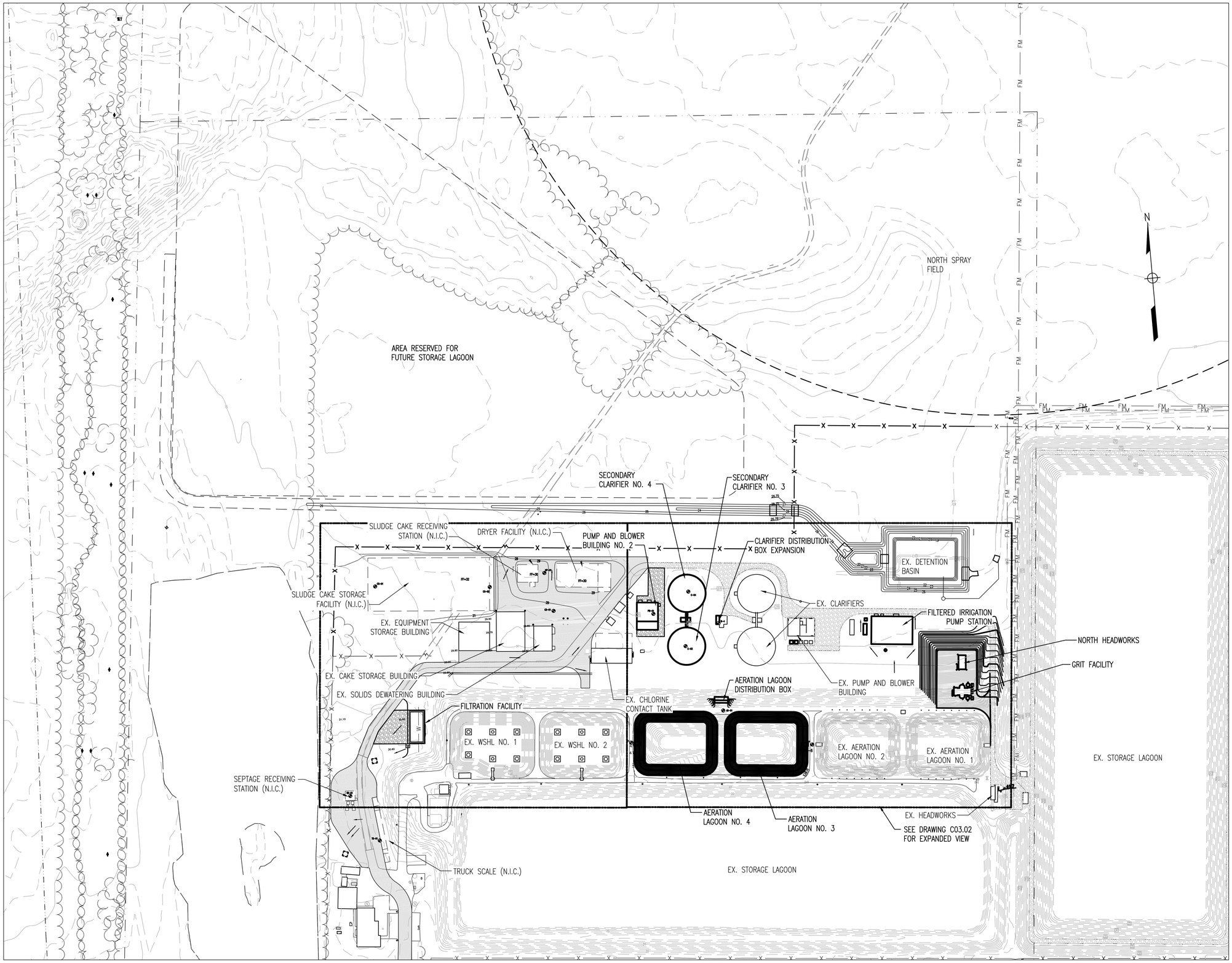

1 C03.01 GRADING PLAN
SCALE: 1" = 100'

C:\Users\whinz\appdata\local\temp\AcPublish_9636\142560203C3-01.dwg

REVISIONS		

CLIENT INFORMATION

SUSSEX COUNTY, DE
ENGINEERING
DEPARTMENT

INLAND BAYS RWF
PHASE #2 EXPANSION:
CONTRACT S19-10

KEY PLAN

GRAPHIC SCALES

0 50' 100' 200'
SCALE: 1" = 100'

SIGNATURE

FRIED F. HINZ
LICENSED
No. 18956
PROFESSIONAL ENGINEER
DELAWARE

Whitman, Requardt & Associates, LLP
801 South Caroline Street, Baltimore, Maryland 21231

OVERALL GRADING PLAN

DRAWING NO.

C03.01

SCALE: AS SHOWN		
DATE: JULY 2019	SHEET 17 OF 229	
DES: FJB	DRAWN: JAM	CHECK: WFH

MATCHLINE A-A – SEE DRAWING C03-02

NEW PAVEMENT (N.I.C.)

GRAVEL

SECONDARY CLARIFIER NO. 4

C-04

SECONDARY CLARIFIER NO. 3

C-03

FF= 28.50

PB-01

PUMP AND BLOWER BUILDING

B-4

EX. SECONDARY CLARIFIER

EX. SECONDARY CLARIFIER

EX. PUMP AND BLOWER BUILDING

EX. BACK-UP GENERATOR

FF= 27.50

FILTERED IRRIGATION PUMP STATION

FF= 42.50

NORTH HEADWORKS

GRIT FACILITY

FF= 47.50

ASPHALT PAVING

AERATION LAGOON DISTRIBUTION BOX

AD-01

AERATION LAGOON NO. 4

AERATION LAGOON NO. 3

B-6

EX. AERATION LAGOON NO. 2

EX. AERATION LAGOON NO. 1

EX. STORAGE LAGOON

EX. HEADWORKS

1 C03.03 GRADING PLAN
SCALE: 1" = 30'

CONSTRUCTION NOTES

1. PROPOSED WET POND STORMWATER FACILITY BY OTHERS. SEE DWG. C06.11 FOR DETAILS.
2. PROPOSED GRASSED CHANNEL. SEE DWG. C06.10 FOR DETAILS.
3. INSTALL 6-INCHES OF CRUSHER RUN.

C:\Users\whinz\appdata\local\temp\AcPublish_9636\14256026C3-01.dwg

REVISIONS		

CLIENT INFORMATION

SUSSEX COUNTY, DE
ENGINEERING
DEPARTMENT

INLAND BAYS RWF
PHASE #2 EXPANSION:
CONTRACT S19-10

KEY PLAN

GRAPHIC SCALES

0 15' 30' 60'
SCALE: 1" = 30'

SIGNATURE

FRIED F. HINZ
No. 18956
7/19/19
DELAWARE
PROFESSIONAL ENGINEER

Whitman, Requardt & Associates, LLP
801 South Caroline Street, Baltimore, Maryland 21231

GRADING PLAN

DRAWING NO.

C03.02

SCALE: AS SHOWN		
DATE: JULY 2019	SHEET 18 OF 229	
DES: FJB	DRAWN: JAM	CHECK: WFH

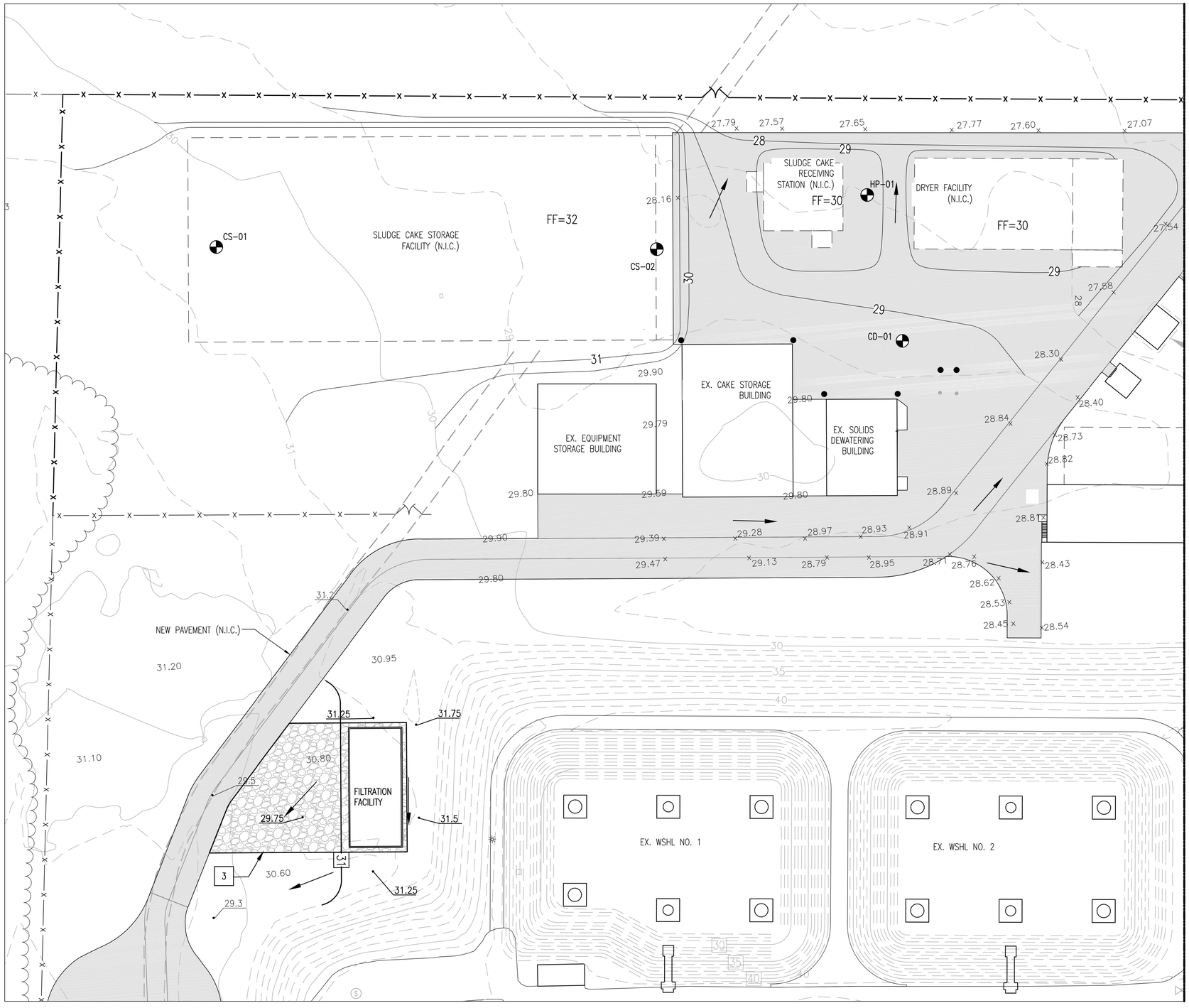

1 C03.03 GRADING PLAN
SCALE: 1" = 30'

X CONSTRUCTION NOTES

1. PROPOSED WET POND STORMWATER FACILITY BY OTHERS. SEE DWG. C06.11 FOR DETAILS.
2. PROPOSED GRASSED CHANNEL. SEE DWG. C06.10 FOR DETAILS.
3. INSTALL 6-INCHES OF CRUSHER RUN.

C:\Users\whinz\appdata\local\temp\AcPublish_9636\142560286C3-01.dwg

REVISIONS

CLIENT INFORMATION

SUSSEX COUNTY, DE
ENGINEERING
DEPARTMENT

INLAND BAYS RWF
PHASE #2 EXPANSION:
CONTRACT S19-10

KEY PLAN

GRAPHIC SCALES

0 15' 30' 60'
SCALE: 1" = 30'

SIGNATURE

WILLFRIED F. HINZ
No. 18956
7/19/19
DELAWARE
PROFESSIONAL ENGINEER

Whitman, Requardt & Associates, LLP
801 South Caroline Street, Baltimore, Maryland 21231

GRADING PLAN

DRAWING NO.
C03.03

SCALE: AS SHOWN		
DATE: JULY 2019	SHEET 19 OF 229	
DES: FJB	DRAWN: JAM	CHECK: WFH

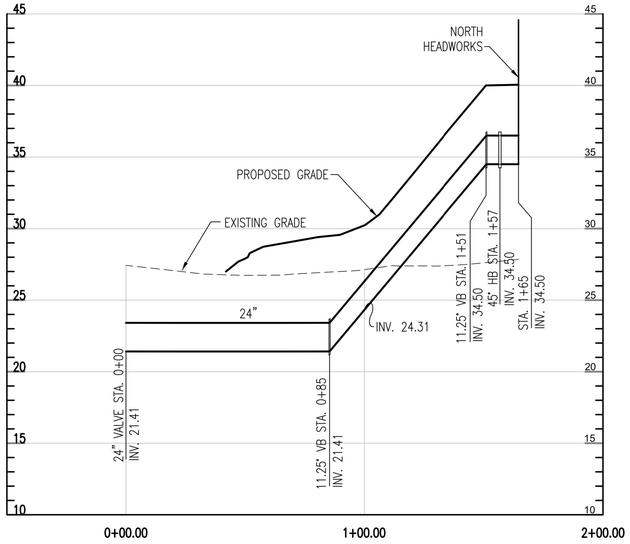

1 C04.01 **24" NORTH HEADWORKS INFLUENT LINE** 1
H: 1"=30' V: 1"=5'

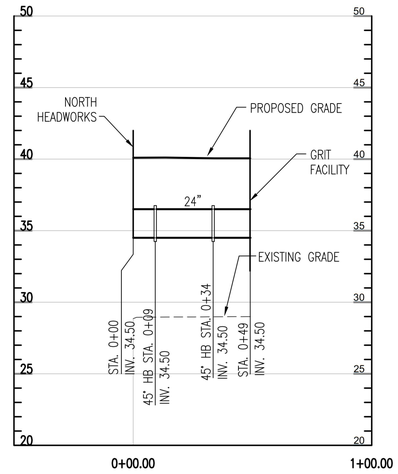

2 C04.01 **24" NORTH HEADWORKS TO GRIT FACILITY** 1
H: 1"=30' V: 1"=5'

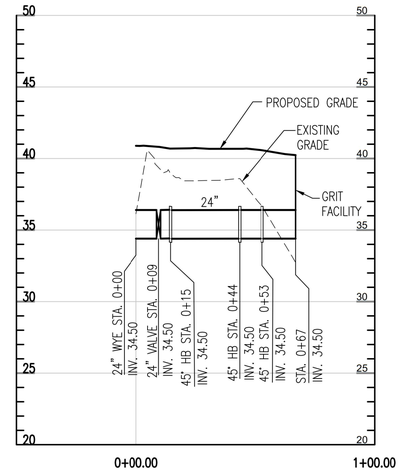

3 C04.01 **24" EXISTING HEADWORKS TO GRIT FACILITY** 1
H: 1"=30' V: 1"=5'

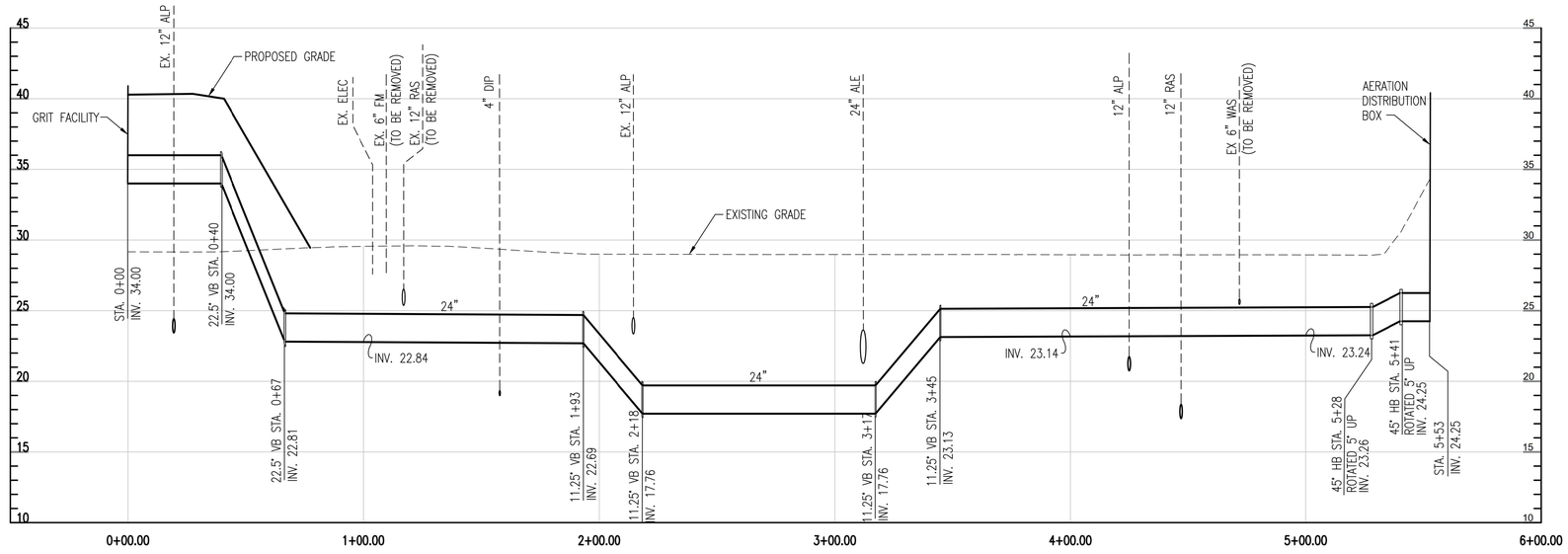

4 C04.01 **24" GRIT FACILITY TO AERATION DISTRIBUTION BOX** 1
H: 1"=30' V: 1"=5'

X **CONSTRUCTION NOTE**

1. RESTRAIN ALL FITTINGS AND JOINTS WITHIN 20' OF ANY FITTING.

C:\Users\whinz\appdata\local\temp\AcPublish_9636\142560260C4-01.dwg

REVISIONS		

CLIENT INFORMATION

SUSSEX COUNTY, DE
ENGINEERING
DEPARTMENT

INLAND BAYS RWF
PHASE #2 EXPANSION:
CONTRACT S19-10

KEY PLAN

GRAPHIC SCALES

0 15' 30' 60'
SCALE: 1" = 30'

0 5' 10'
SCALE: 1" = 5'

SIGNATURE



Whitman, Requardt & Associates, LLP
801 South Caroline Street, Baltimore, Maryland 21231

UTILITY PROFILES

DRAWING NO.

C04.01

SCALE: AS SHOWN		
DATE: JULY 2019	SHEET 20 OF 229	
DES: FJB	DRAWN: JAM	CHECK: WFH

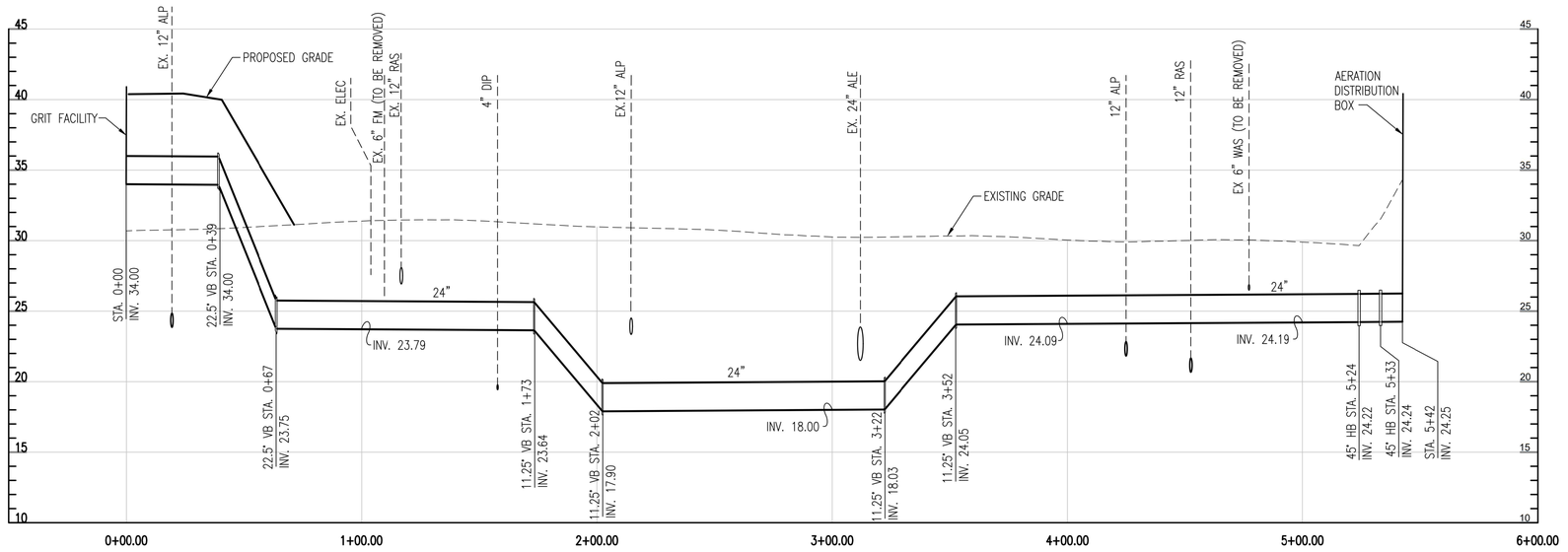

5 / C04.02 — 24" GRIT FACILITY TO AERATION DISTRIBUTION BOX [1]

H: 1"=30' V: 1"=5'

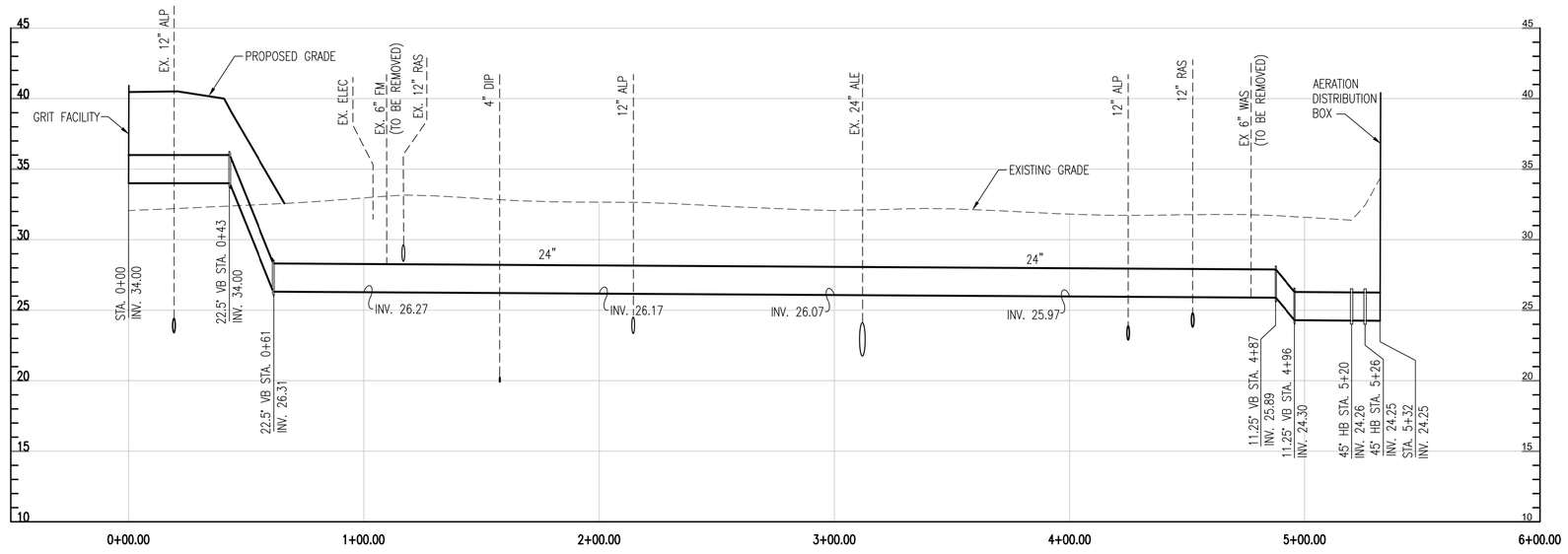

6 / C04.02 — 24" GRIT FACILITY TO AERATION DISTRIBUTION BOX [1]

H: 1"=30' V: 1"=5'

[X] CONSTRUCTION NOTE

1. RESTRAIN ALL FITTINGS AND JOINTS WITHIN 20' OF ANY FITTING.

C:\Users\whinz\appdata\local\temp\AcPublish_9636\142560260C4-01.dwg

REVISIONS

CLIENT INFORMATION

SUSSEX COUNTY, DE
ENGINEERING
DEPARTMENT

INLAND BAYS RWF
PHASE #2 EXPANSION:
CONTRACT S19-10

KEY PLAN

GRAPHIC SCALES

0 15' 30' 60'
SCALE: 1" = 30'

0 5' 10'
SCALE: 1" = 5'

SIGNATURE

ALFRIED F. HINZ — LICENSED — No. 18956 — 7/9/19 — DELAWARE — PROFESSIONAL ENGINEER

Whitman, Requardt & Associates, LLP
801 South Caroline Street, Baltimore, Maryland 21231

UTILITY PROFILES

DRAWING NO.

C04.02

SCALE: AS SHOWN		
DATE: JULY 2019	SHEET 21 OF 229	
DES: FJB	DRAWN: JAM	CHECK: WFH

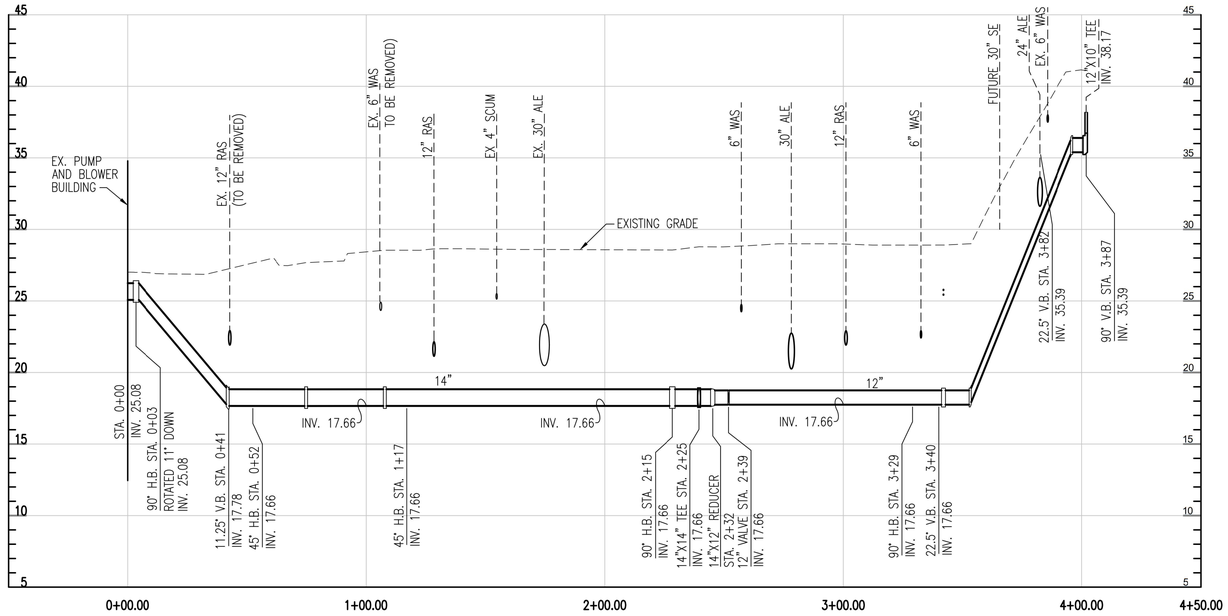

14"/12" ALP EX. PUMP AND BLOWER TO AERATION LAGOON 4 [1]

7 / C04.03 H: 1"=30' V: 1"=5'

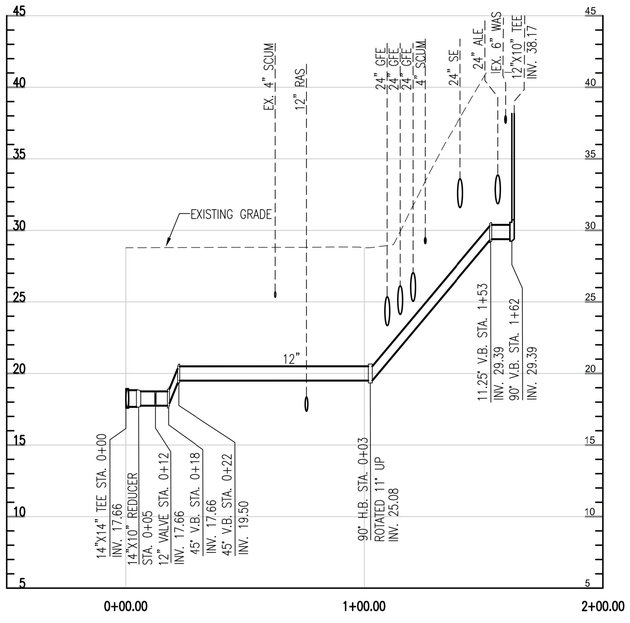

8 / C04.03 12" ALP TO AERATION LAGOON [1]

H: 1"=30' V: 1"=5'

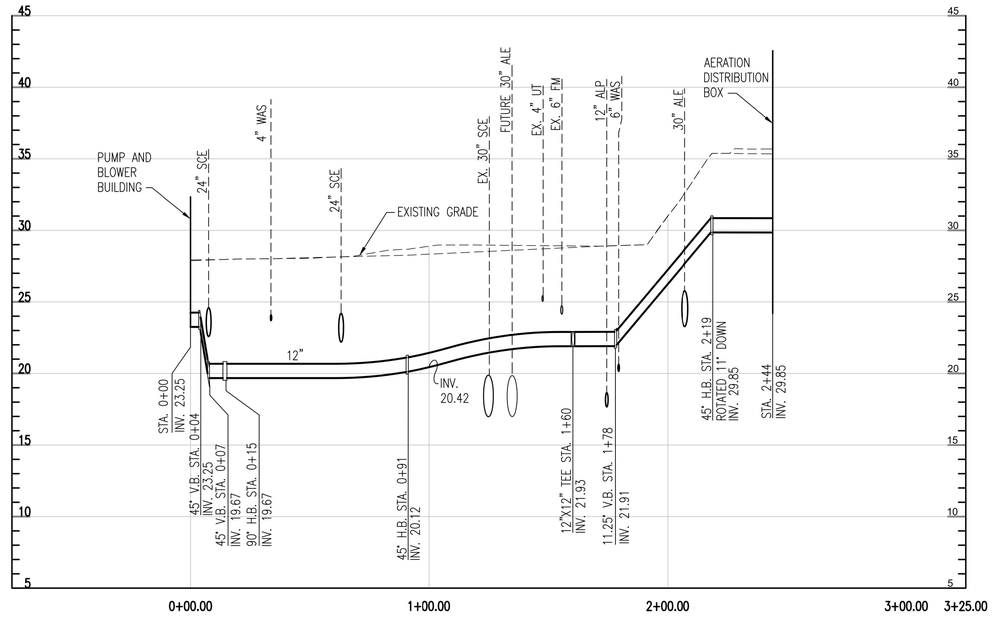

9 / C04.03 12" RAS PUMP AND BLOWER TO AERATION BASIN DISTRIBUTION BOX [2]

H: 1"=30' V: 1"=5'

[X] CONSTRUCTION NOTE

1. RESTRAIN ALL FITTINGS AND JOINTS WITHIN 20' OF ANY FITTING.
2. RESTRAIN ALL FITTINGS AND JOINTS WITHIN 40' OF ANY FITTING.

REVISIONS

CLIENT INFORMATION

SUSSEX COUNTY, DE
ENGINEERING
DEPARTMENT

INLAND BAYS RWF
PHASE #2 EXPANSION:
CONTRACT S19-10

KEY PLAN

GRAPHIC SCALES

0 15' 30' 60'
SCALE: 1" = 30'

0 5' 10'
SCALE: 1" = 5'

SIGNATURE

ALFRIED F. HINZ IV — LICENSED — No. 18956 — 7/9/19 — DELAWARE — PROFESSIONAL ENGINEER

Whitman, Requardt & Associates, LLP
801 South Caroline Street, Baltimore, Maryland 21231

UTILITY PROFILES

DRAWING NO.

C04.03

SCALE: AS SHOWN		
DATE: JULY 2019	SHEET 22 OF 229	
DES: FJB	DRAWN: JAM	CHECK: WFH

C:\Users\whinz\appdata\local\temp\AcPublish_9636\14256026C4-01.dwg

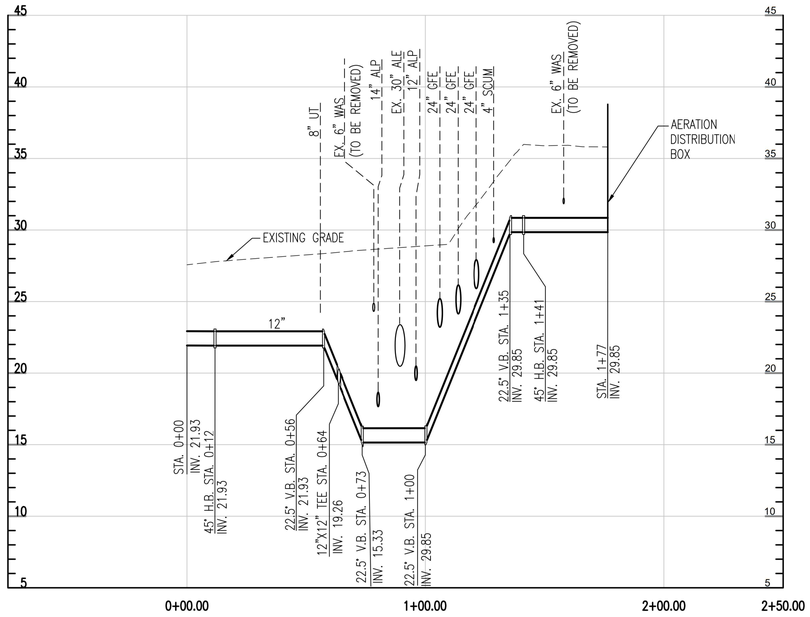

12" RAS EX. PUMP AND BLOWER BUILDING TO AERATION DISTIBUTION BOX [2]

10 / C04.04 H: 1"=30' V: 1"=5'

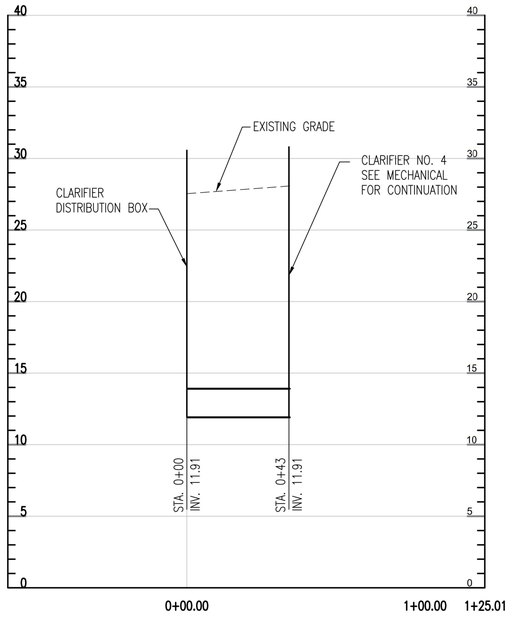

24" ALE CLARIFIER DISTRIBUTION BOX TO CLARIFIER NO.4 [1]

11 / C04.04 H: 1"=30' V: 1"=5'

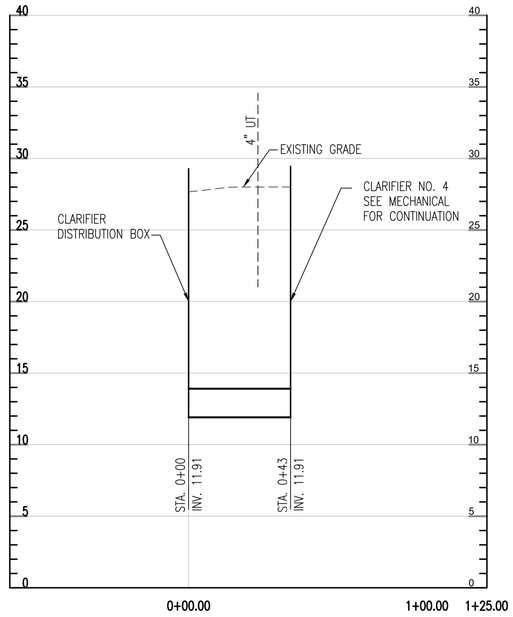

24" ALE CLARIFIER DISTRIBUTION BOX TO CLARIFIER NO.3 [1]

12 / C04.04 H: 1"=30' V: 1"=5'

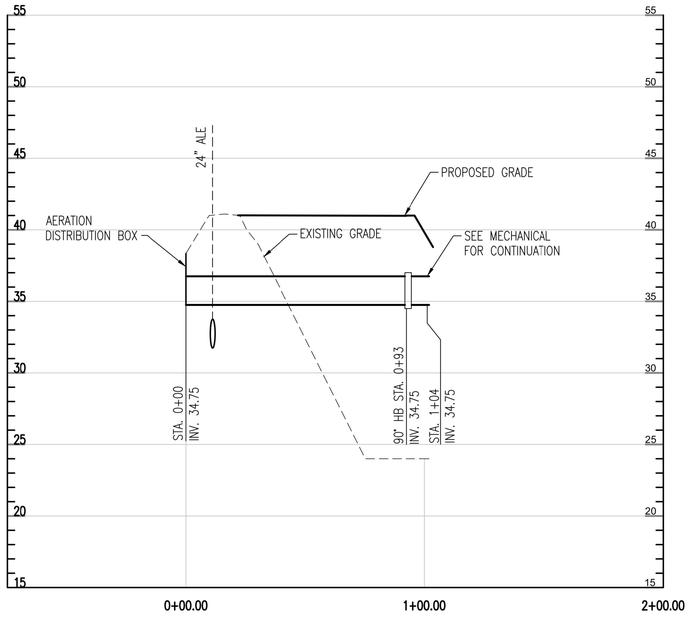

24" SCE AERATION DISTRIBUTION BOX TO AERATION LAGOON NO. 4 [1]

13 / C04.04 H: 1"=30' V: 1"=5'

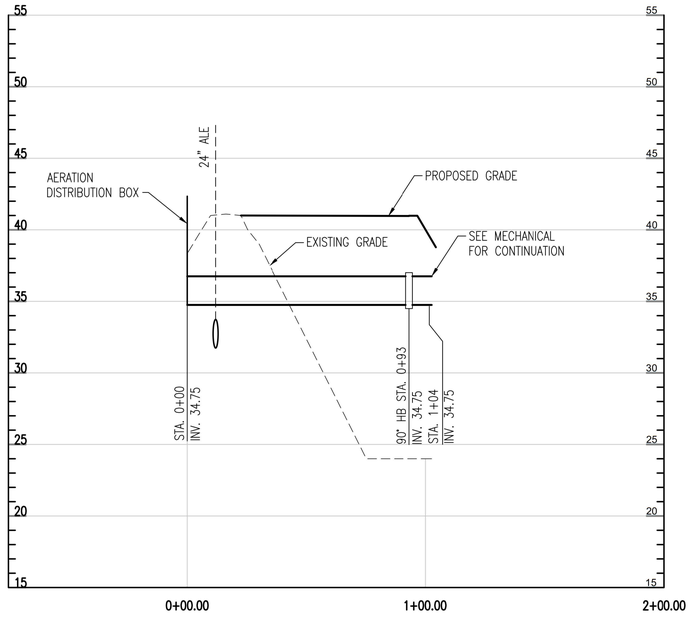

24" SCE AERATION DISTRIBUTION BOX TO AERATION LAGOON NO. 3 [1]

14 / C04.04 H: 1"=30' V: 1"=5'

[X] CONSTRUCTION NOTE

1. RESTRAIN ALL FITTINGS AND JOINTS WITHIN 20' OF ANY FITTING.
2. RESTRAIN ALL FITTINGS AND JOINTS WITHIN 40' OF ANY FITTING.

C:\Users\whinz\appdata\local\temp\AcPublish_9636\14256026C4-01.dwg

REVISIONS		

CLIENT INFORMATION

SUSSEX COUNTY, DE ENGINEERING DEPARTMENT

INLAND BAYS RWF PHASE #2 EXPANSION: CONTRACT S19-10

KEY PLAN

GRAPHIC SCALES

0 15' 30' 60'
SCALE: 1" = 30'

0 5' 10'
SCALE: 1" = 5'

SIGNATURE

ALFRIED F. HINZ JR. — No. 18956 — 7/9/19 — DELAWARE — PROFESSIONAL ENGINEER

Whitman, Requardt & Associates, LLP
801 South Caroline Street, Baltimore, Maryland 21231

UTILITY PROFILES

DRAWING NO.

C04.04

SCALE: AS SHOWN		
DATE: JULY 2019	SHEET 23 OF 229	
DES: FJB	DRAWN: JAM	CHECK: WFH

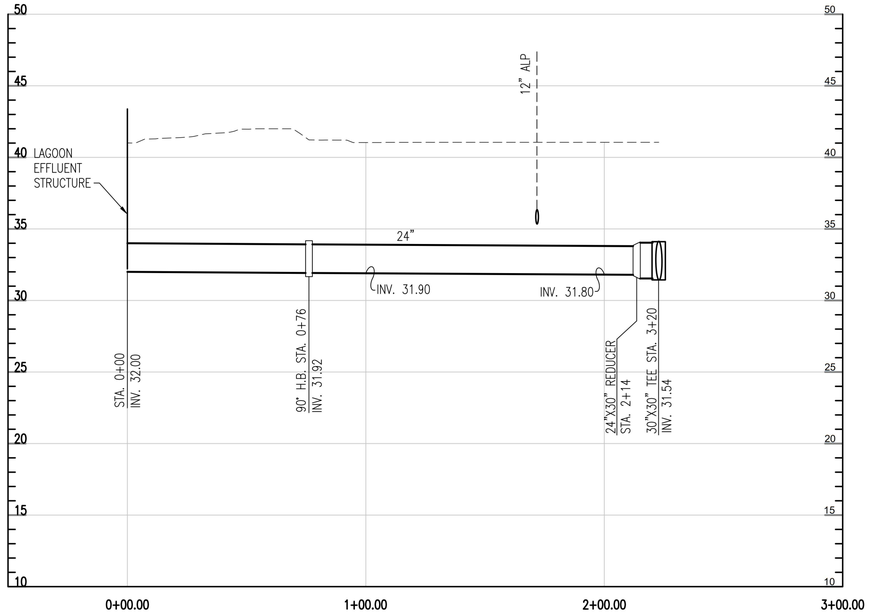

24"/30" ALE LAGOON EFFLUENT STRUCTURE TO 30"X30" TEE [1]

15 / C04.05 H: 1"=30' V: 1"=5'

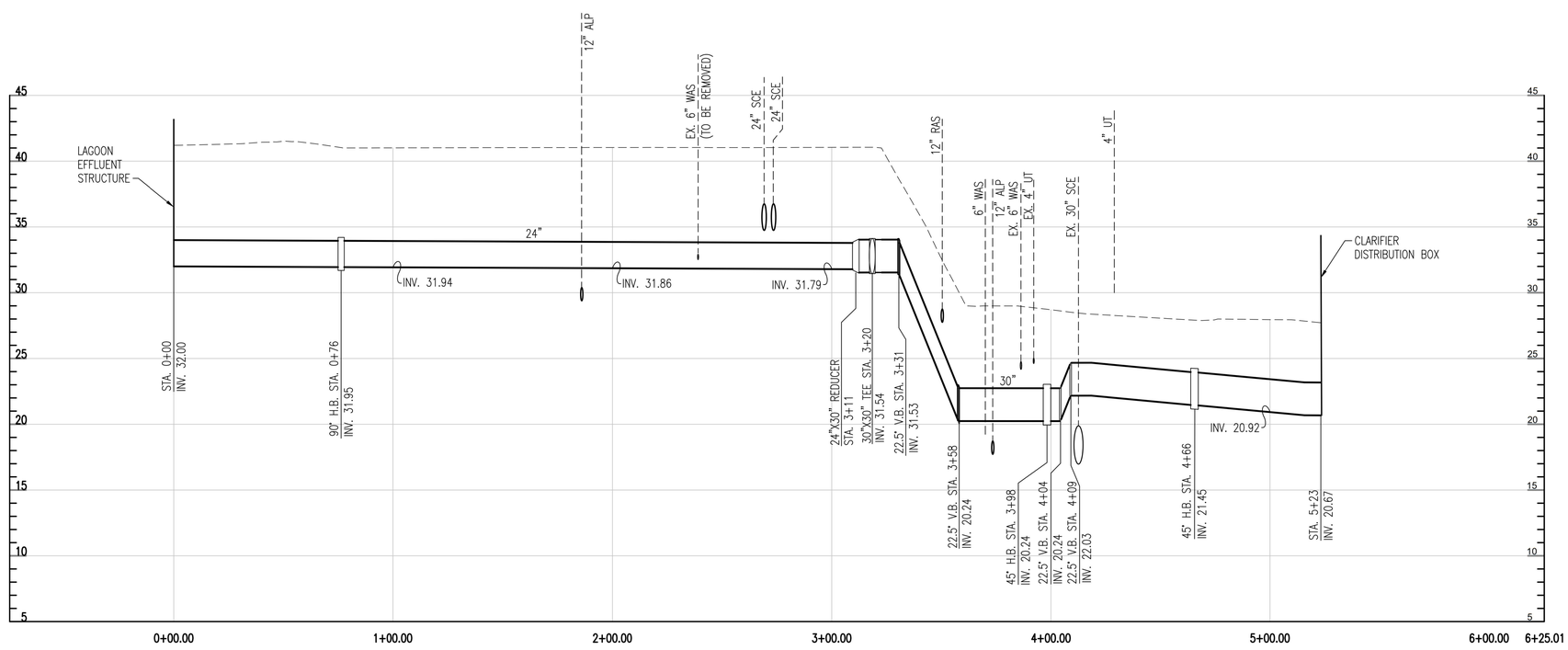

24"/30" ALE LAGOON EFFLUENT STRUCTURE TO CLARIFIER DISTRUBUTION BOX [1]

16 / C04.05 H: 1"=30' V: 1"=5'

[X] CONSTRUCTION NOTE

1. RESTRAIN ALL FITTINGS AND JOINTS WITHIN 20' OF ANY FITTING.

C:\Users\whinz\appdata\local\temp\AcPublish_9836\142560264-01.dwg

REVISIONS		

CLIENT INFORMATION

SUSSEX COUNTY, DE
ENGINEERING
DEPARTMENT

INLAND BAYS RWF
PHASE #2 EXPANSION:
CONTRACT S19-10

KEY PLAN

GRAPHIC SCALES

0 15' 30' 60'
SCALE: 1" = 30'

0 5' 10'
SCALE: 1" = 5'

SIGNATURE



Whitman, Requardt & Associates, LLP
801 South Caroline Street, Baltimore, Maryland 21231

UTILITY PROFILES

DRAWING NO.

C04.05

SCALE: AS SHOWN		
DATE: JULY 2019	SHEET 24 OF 229	
DES: FJB	DRAWN: JAM	CHECK: WFH

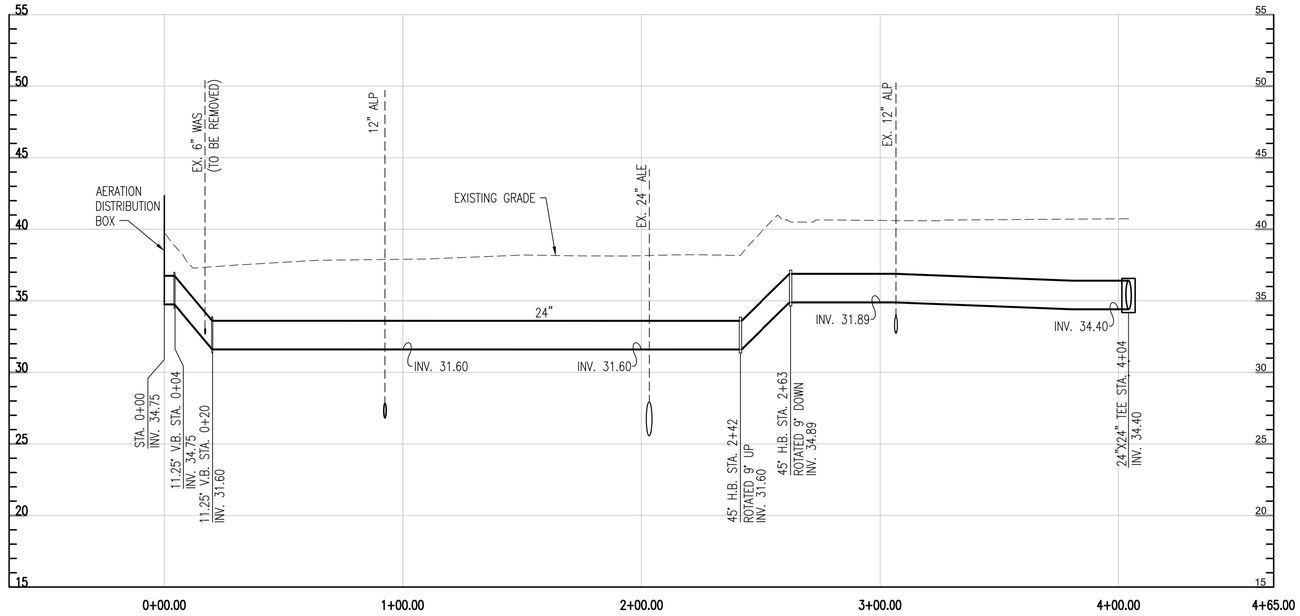

24" ALE CLARIFIER DISTRIBUTION BOX TO EX. LAGOON INFLUENT DISTRIBUTION BOX [1]

17 / C04.06 H: 1"=30' V: 1"=5'

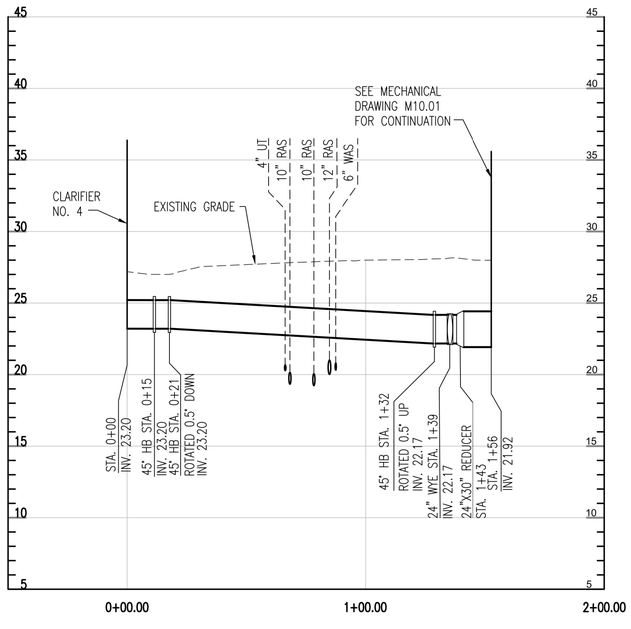

24"/30" SCE CLARIFIER NO. 4 TO EX. CHLORINE CONTACT TANK [1]

18 / C04.06 H: 1"=30' V: 1"=5'

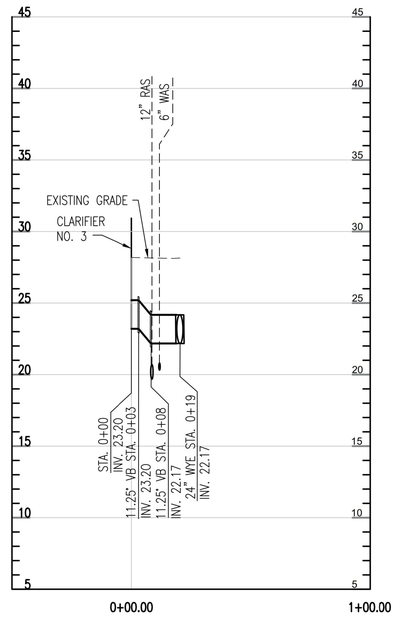

24" SCE CLARIFIER NO. 3 TO 24" WYE [1]

19 / C04.06 H: 1"=30' V: 1"=5'

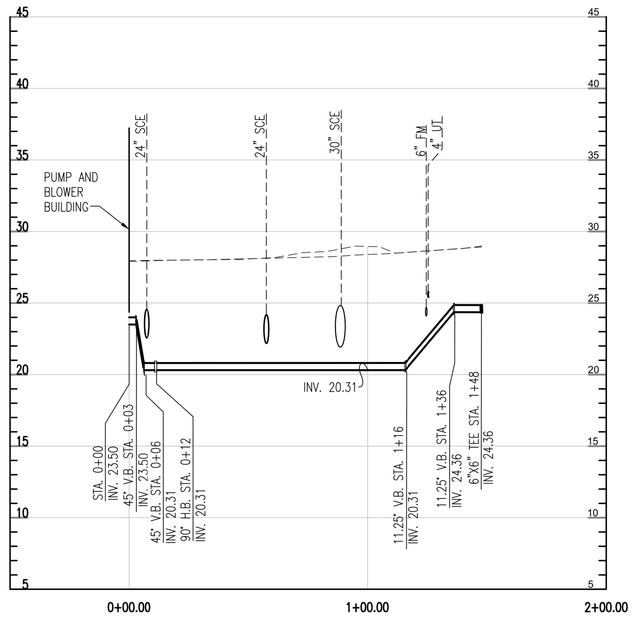

6" WAS PUMP AND BLOWER TO 6"X6" TEE [2]

20 / C04.06 H: 1"=30' V: 1"=5'

[X] CONSTRUCTION NOTE

1. RESTRAIN ALL FITTINGS AND JOINTS WITHIN 20' OF ANY FITTING.
2. RESTRAIN ALL FITTINGS AND JOINTS WITHIN 40' OF ANY FITTING.

C:\Users\whinz\appdata\local\temp\AcPublish_9636\14256026C4-01.dwg

REVISIONS		

CLIENT INFORMATION

SUSSEX COUNTY, DE ENGINEERING DEPARTMENT

INLAND BAYS RWF PHASE #2 EXPANSION: CONTRACT S19-10

KEY PLAN

GRAPHIC SCALES

0 15' 30' 60'
SCALE: 1" = 30'

0 5' 10'
SCALE: 1" = 5'

SIGNATURE



Whitman, Requardt & Associates, LLP
801 South Caroline Street, Baltimore, Maryland 21231

UTILITY PROFILES

DRAWING NO.

C04.06

SCALE: AS SHOWN		
DATE: JULY 2019	SHEET 25 OF 229	
DES: FJB	DRAWN: JAM	CHECK: WFH

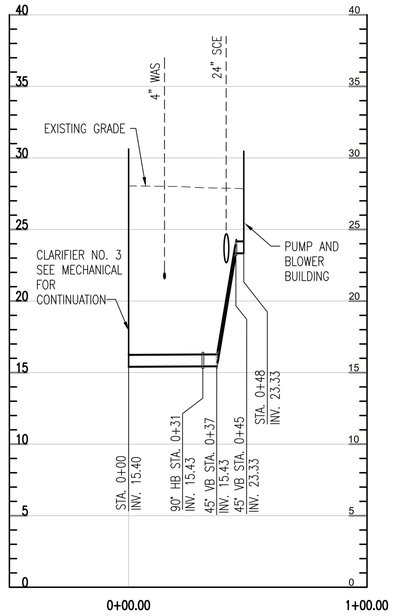

10" RAS CLARIFER 3 TO PUMP AND BLOWER BUILDING [1]

21 C04.07 H: 1"=30' V: 1"=5'

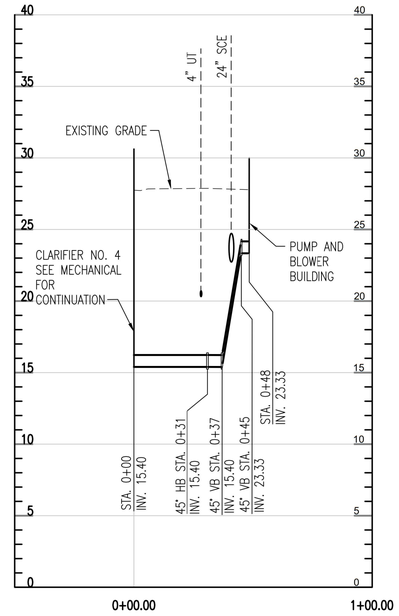

10" RAS CLARIFER 3 TO PUMP AND BLOWER BUILDING [1]

22 C04.07 H: 1"=30' V: 1"=5'

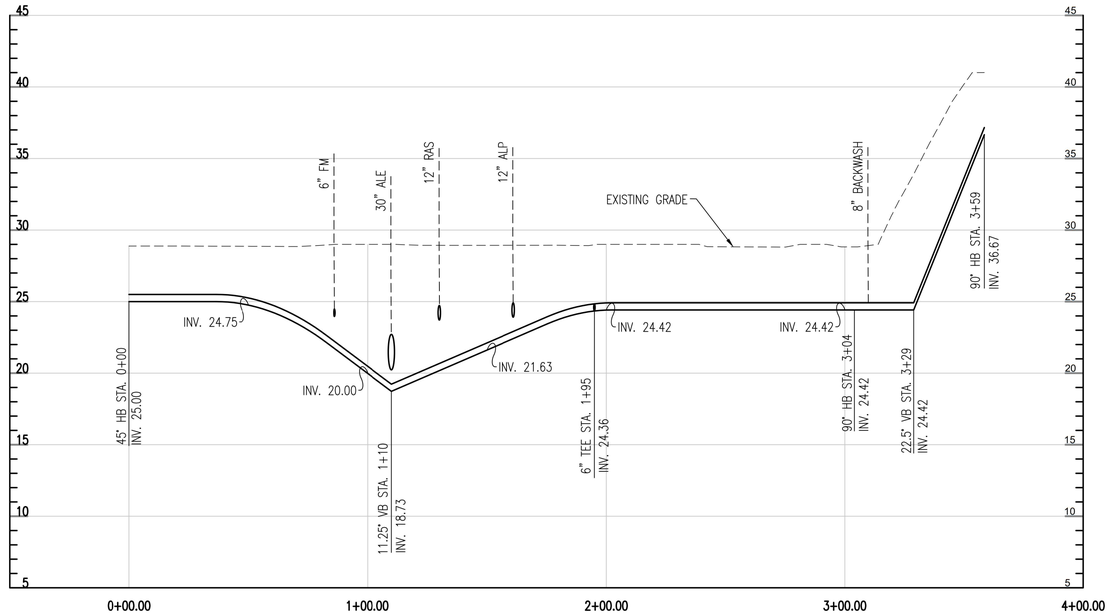

6" WAS TO EX. SLUDGE LAGOON NO. 2 [1]

23 C04.07 H: 1"=30' V: 1"=5'

X CONSTRUCTION NOTE

1. RESTRAIN ALL FITTINGS AND JOINTS WITHIN 40' OF ANY FITTING.

REVISIONS

CLIENT INFORMATION

SUSSEX COUNTY, DE ENGINEERING DEPARTMENT

INLAND BAYS RWF PHASE #2 EXPANSION: CONTRACT S19-10

KEY PLAN

GRAPHIC SCALES

0 15' 30' 60'
SCALE: 1" = 30'

0 5' 10'
SCALE: 1" = 5'

SIGNATURE

WILFRIED F. HINZ LICENSED No. 18956 DELAWARE PROFESSIONAL ENGINEER 7/9/19

Whitman, Requardt & Associates, LLP
801 South Caroline Street, Baltimore, Maryland 21231

UTILITY PROFILES

DRAWING NO.

C04.07

SCALE: AS SHOWN

DATE: JULY 2019 | SHEET 26 OF 229

DES: FJB | DRAWN: JAM | CHECK: WFH

C:\Users\whinz\appdata\local\temp\AcPublish_9636\14256026C4-01.dwg

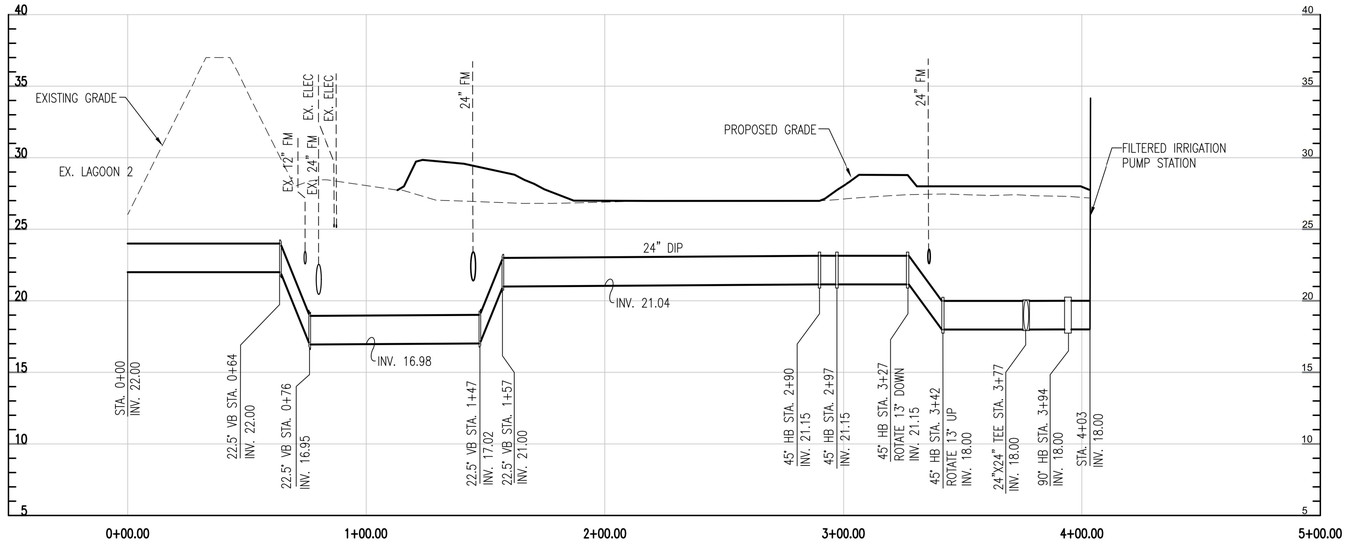

12" EX. LAGOON NO. 2 TO
FILTERED IRRIGATION PUMP STATION [1]

24 / C04.08 H: 1"=30' V: 1"=5'

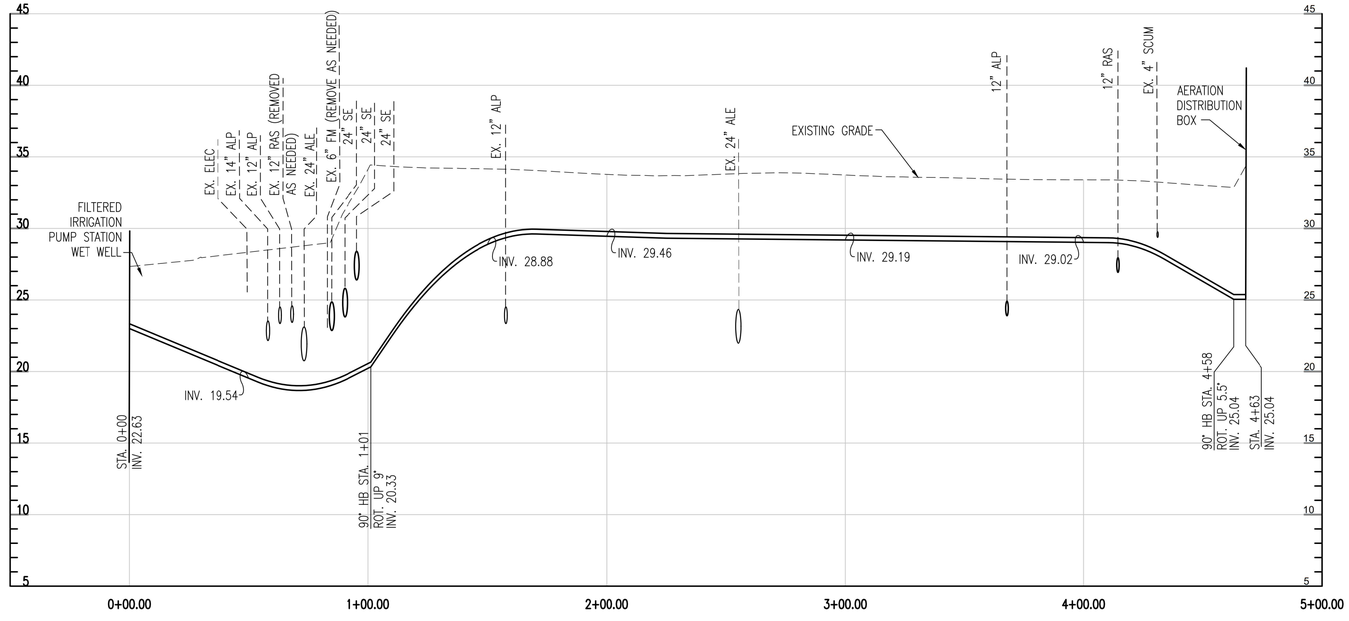

4" FILTERED IRRIGATION DRAIN LINE
TO AERATION DISTRIBUTION BOX [2]

25 / C04.08 H: 1"=30' V: 1"=5'

[X] CONSTRUCTION NOTE

1. RESTRAIN ALL FITTINGS AND JOINTS WITHIN 20' OF ANY FITTING.
2. RESTRAIN ALL FITTINGS AND JOINTS WITHIN 40' OF ANY FITTING.

C:\Users\whinz\appdata\local\temp\AcPublish_9636\142560204C4-01.dwg

REVISIONS		

CLIENT INFORMATION

SUSSEX COUNTY, DE
ENGINEERING
DEPARTMENT

INLAND BAYS RWF
PHASE #2 EXPANSION:
CONTRACT S19-10

KEY PLAN

GRAPHIC SCALES

0 15' 30' 60'
SCALE: 1" = 30'

0 5' 10'
SCALE: 1" = 5'

SIGNATURE

FRIED F. HINZ
DELAWARE
No. 18956
7/9/19
PROFESSIONAL ENGINEER

Whitman, Requardt & Associates, LLP
801 South Caroline Street, Baltimore, Maryland 21231

UTILITY PROFILES

DRAWING NO.

C04.08

SCALE: AS SHOWN		
DATE: JULY 2019	SHEET 27 OF 229	
DES: FJB	DRAWN: JAM	CHECK: WFH

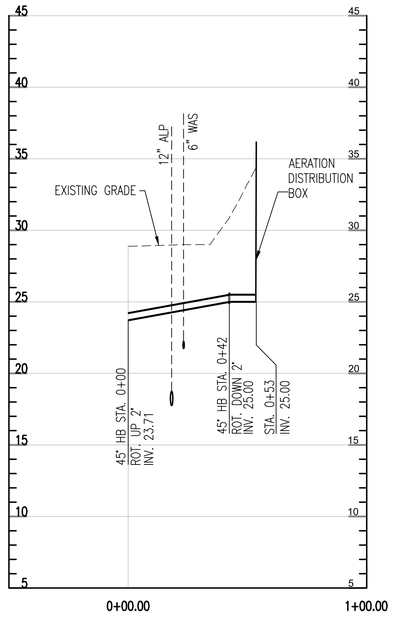

6" WAS FROM PLANT DRAIN PUMP STATION TO AERATION DISTRIBUTION BOX [1]

26 / C04.09 H: 1"=30' V: 1"=5'

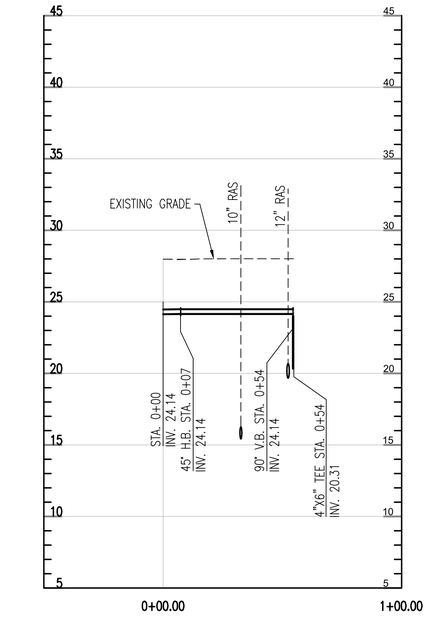

4" WAS FROM SCUM VALVE VAULT TO AERATION DISTRIBUTION BOX [1]

27 / C04.09 H: 1"=30' V: 1"=5'

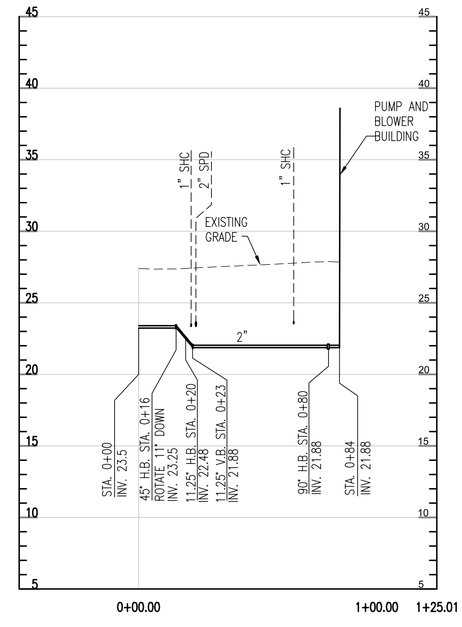

2" POTABLE WATER TO PUMP AND BLOWER BUILDING [1]

28 / C04.09 H: 1"=30' V: 1"=5'

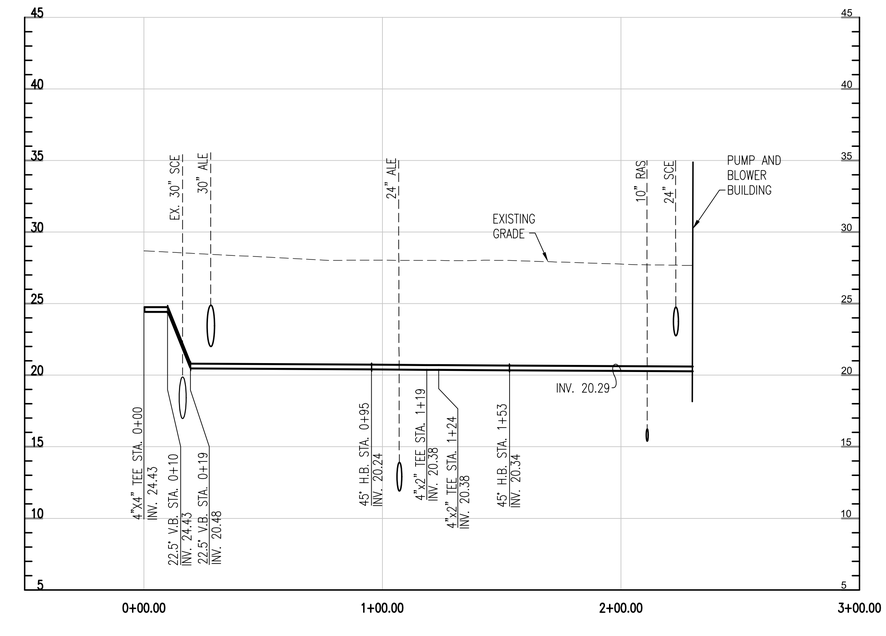

4" UTILITY WATER TO PUMP AND BLOWER BUILDING [1]

29 / C04.09 H: 1"=30' V: 1"=5'

X CONSTRUCTION NOTE

1. RESTRAIN ALL FITTINGS AND JOINTS WITHIN 40' OF ANY FITTING.

C:\Users\whinz\appdata\local\temp\AcPublish_9636\142560264C4-01.dwg

REVISIONS		

CLIENT INFORMATION

SUSSEX COUNTY, DE
ENGINEERING
DEPARTMENT

INLAND BAYS RWF
PHASE #2 EXPANSION:
CONTRACT S19-10

KEY PLAN

GRAPHIC SCALES

0 15' 30' 60'
SCALE: 1" = 30'

0 5' 10'
SCALE: 1" = 5'

SIGNATURE

ALFRIED F. HINZ
LICENSED
No. 18956
DELAWARE
PROFESSIONAL ENGINEER

Whitman, Requardt & Associates, LLP
801 South Caroline Street, Baltimore, Maryland 21231

UTILITY PROFILES

DRAWING NO.

C04.09

SCALE: AS SHOWN		
DATE: JULY 2019	SHEET 28 OF 229	
DES: FJB	DRAWN: JAM	CHECK: WFH

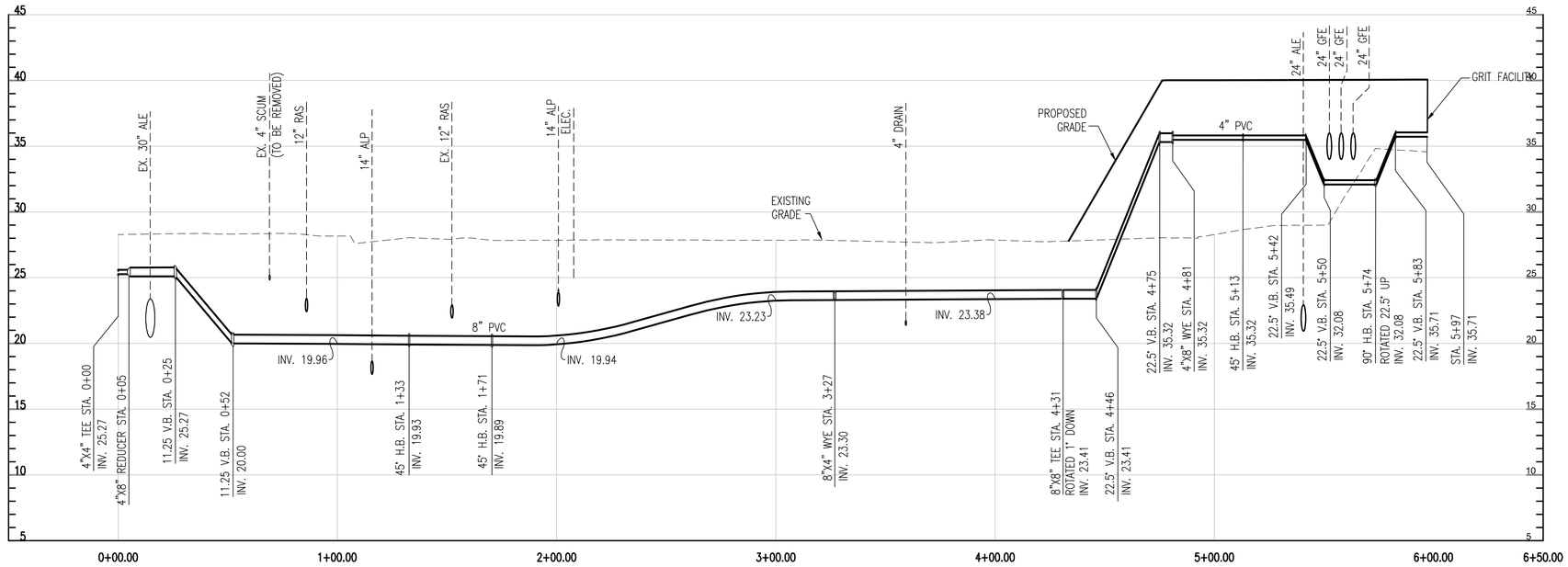

30 C04.10 **8" UTILITY WATER TO GRIT FACILITY** [2]

H: 1"=30' V: 1"=5'

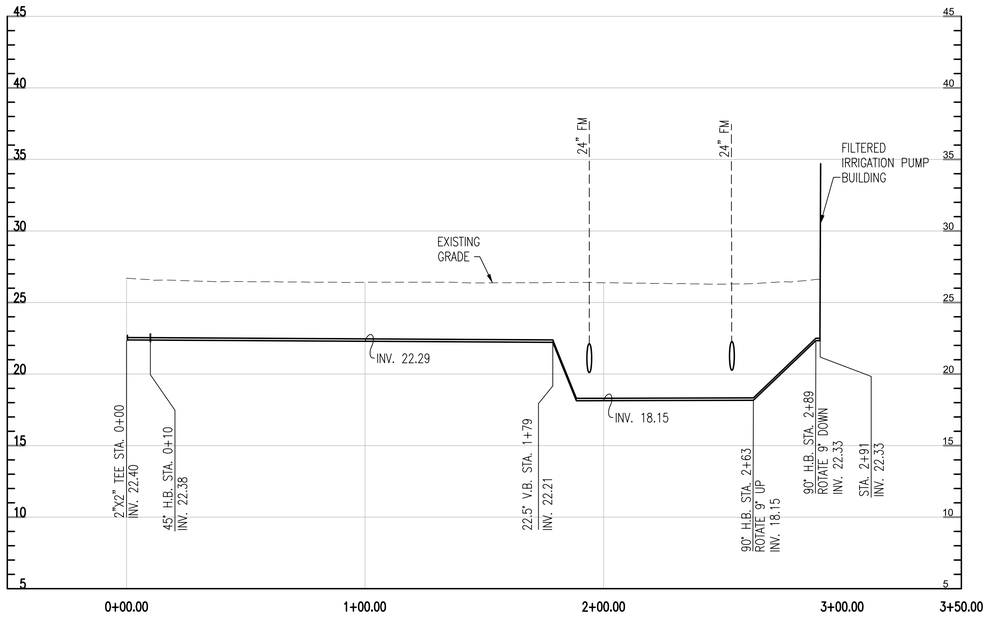

31 C04.10 **2" POTABLE WATER TO FILTERED IRRIGATION PUMP STATION** [2]

H: 1"=30' V: 1"=5'

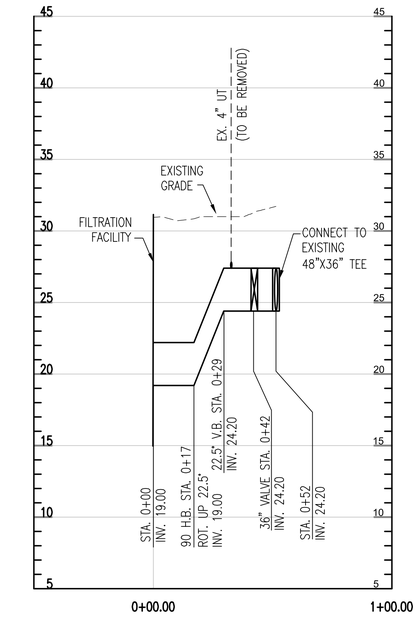

32 C04.10 **36" CHLORINTAED EFFLUENT TO EFFLUENT STORAGE LAGOON** [1]

H: 1"=30' V: 1"=5'

[X] **CONSTRUCTION NOTE**

1. RESTRAIN ALL FITTINGS AND JOINTS WITHIN 20' OF ANY FITTING.
2. RESTRAIN ALL FITTINGS AND JOINTS WITHIN 40' OF ANY FITTING.

C:\Users\jmoyer\appdata\local\temp\AcPublish_564\1428602864-02.dwg

REVISIONS

CLIENT INFORMATION

SUSSEX COUNTY, DE
ENGINEERING
DEPARTMENT

INLAND BAYS RWF
PHASE #2 EXPANSION:
CONTRACT S19-10

KEY PLAN

GRAPHIC SCALES

0 15' 30' 60'
SCALE: 1" = 30'

0 5' 10'
SCALE: 1" = 5'

SIGNATURE

ALFRIED F. HINZ
SENIOR
No. 18956
DELAWARE
PROFESSIONAL ENGINEER
7/7/19

WRA
Whitman, Requardt & Associates, LLP
801 South Caroline Street, Baltimore, Maryland 21231

UTILITY PROFILES

DRAWING NO.

C04.10

SCALE: AS SHOWN		
DATE: JULY 2019	SHEET 29 OF 229	
DES: FJB	DRAWN: JAM	CHECK: WFH

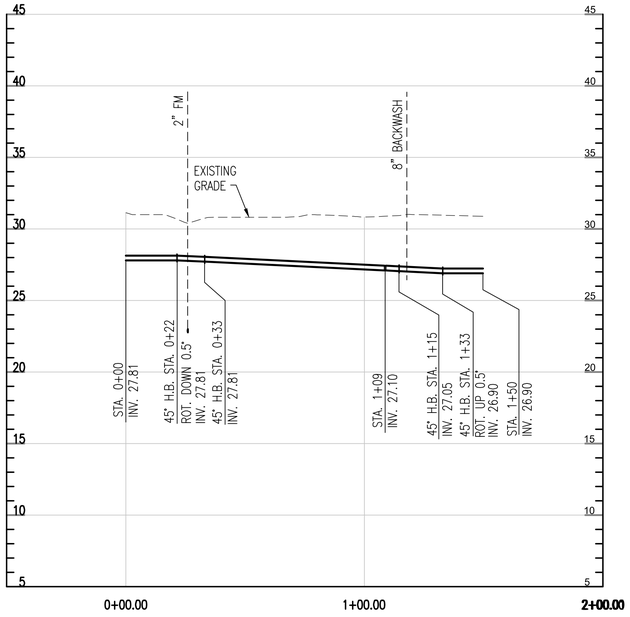

4" UILITY WATER RELOCATION AROUND FILTER FACILITY [2]

33 / C04.11 H: 1"=30' V: 1"=5'

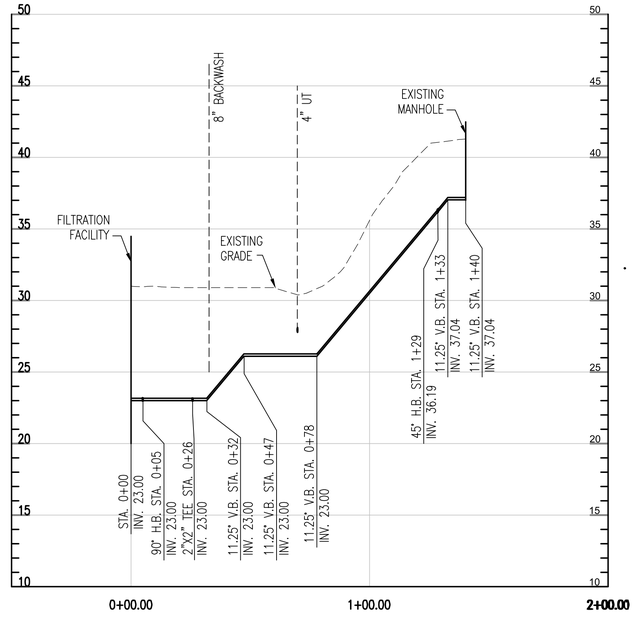

2" SUMP PUMP DRAIN LINE FROM FILTER FACILITY [2]

34 / C04.11 H: 1"=30' V: 1"=5'

[X] CONSTRUCTION NOTE

1. RESTRAIN ALL FITTINGS AND JOINTS WITHIN 20' OF ANY FITTING.
2. RESTRAIN ALL FITTINGS AND JOINTS WITHIN 2–' OF ANY FITTING.

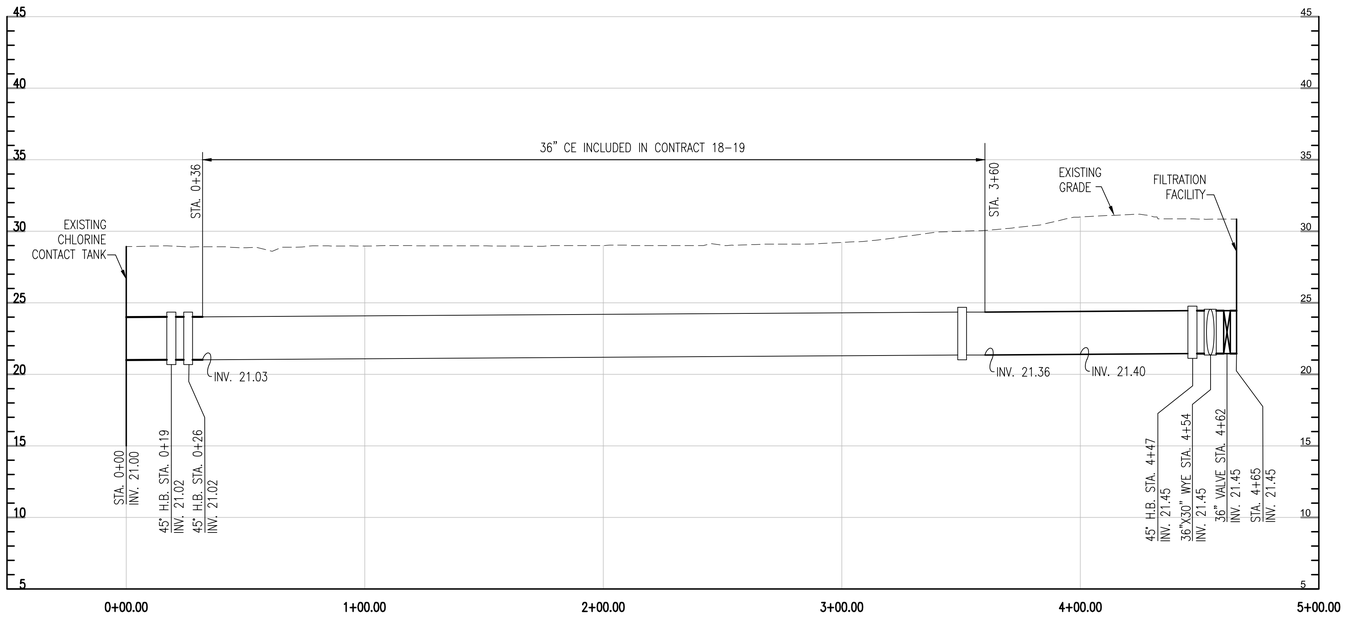

24"/30" ALE LAGOON EFFLUENT STRUCTURE TO CLARIFIER DISTRUBUTION BOX [1]

35 / C04.11 H: 1"=30' V: 1"=5'

C:\Users\jmoyer\appdata\local\temp\AcPublish_15844\1425602604-02.dwg

REVISIONS		

CLIENT INFORMATION

SUSSEX COUNTY, DE
ENGINEERING
DEPARTMENT

INLAND BAYS RWF
PHASE #2 EXPANSION:
CONTRACT S19-10

KEY PLAN

GRAPHIC SCALES

0 15' 30' 60'
SCALE: 1" = 30'

0 5' 10'
SCALE: 1" = 5'

SIGNATURE



Whitman, Requardt & Associates, LLP
801 South Caroline Street, Baltimore, Maryland 21231

UTILITY PROFILES

DRAWING NO.

C04.11

SCALE: AS SHOWN		
DATE: JULY 2019	SHEET 30 OF 229	
DES: FJB	DRAWN: JAM	CHECK: WFH

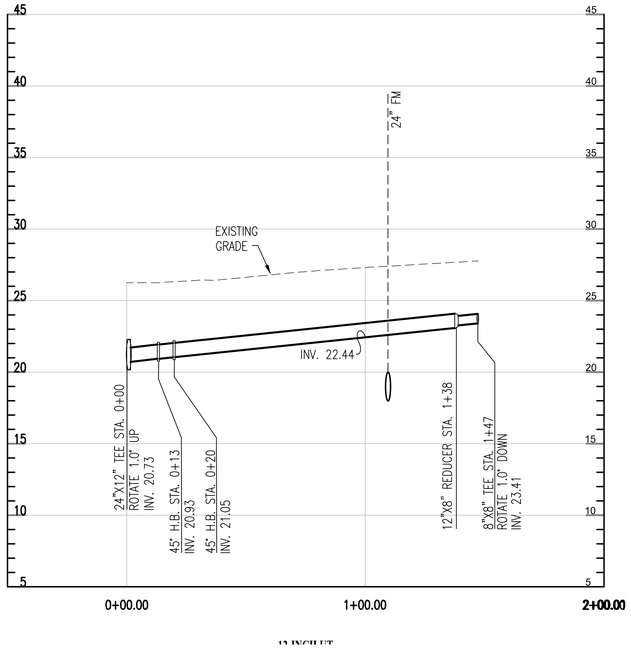

12 INCH UT

36 C04.12 12" UTILITY WATER [1]

H: 1"=30' V: 1"=5'

[X] CONSTRUCTION NOTE

1. RESTRAIN ALL FITTINGS AND JOINTS WITHIN 40' OF ANY FITTING.

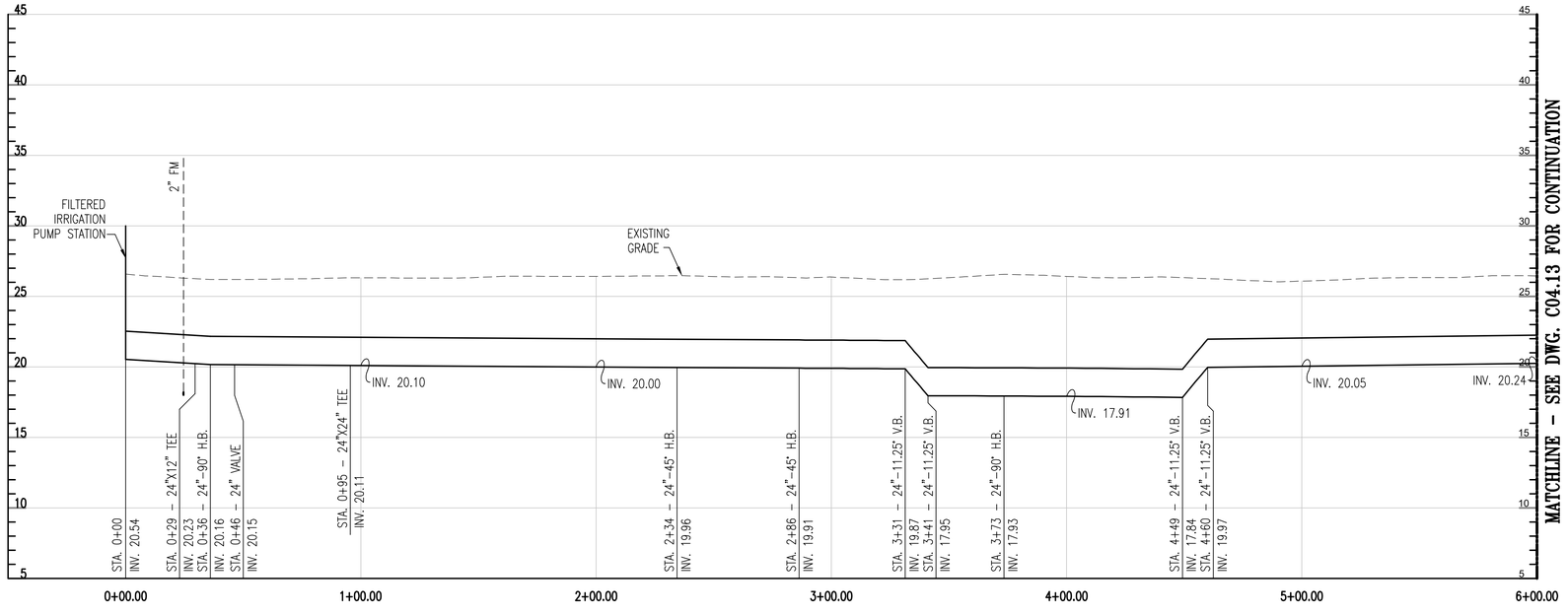

MATCHLINE – SEE DWG. C04.13 FOR CONTINUATION

37 C04.12 24" FM FROM FILTERED IRRIGATION PUMP STATION TO IRRIGATION LOOP [1]

H: 1"=30' V: 1"=5'

C:\Users\jmoyer\appdata\local\temp\AcPublish_56A\14256026C4-02.dwg

REVISIONS

CLIENT INFORMATION

SUSSEX COUNTY, DE
ENGINEERING
DEPARTMENT

INLAND BAYS RWF
PHASE #2 EXPANSION:
CONTRACT S19-10

KEY PLAN

GRAPHIC SCALES

0 15' 30' 60'
SCALE: 1" = 30'

0 5' 10'
SCALE: 1" = 5'

SIGNATURE

WILLFRIED F. HINZ
LICENSED
No. 18956
7/9/19
DELAWARE
PROFESSIONAL ENGINEER

Whitman, Requardt & Associates, LLP
801 South Caroline Street, Baltimore, Maryland 21231

UTILITY PROFILES

DRAWING NO.

C04.12

SCALE: AS SHOWN		
DATE: JULY 2019		SHEET 31 OF 229
DES: FJB	DRAWN: JAM	CHECK: WFH

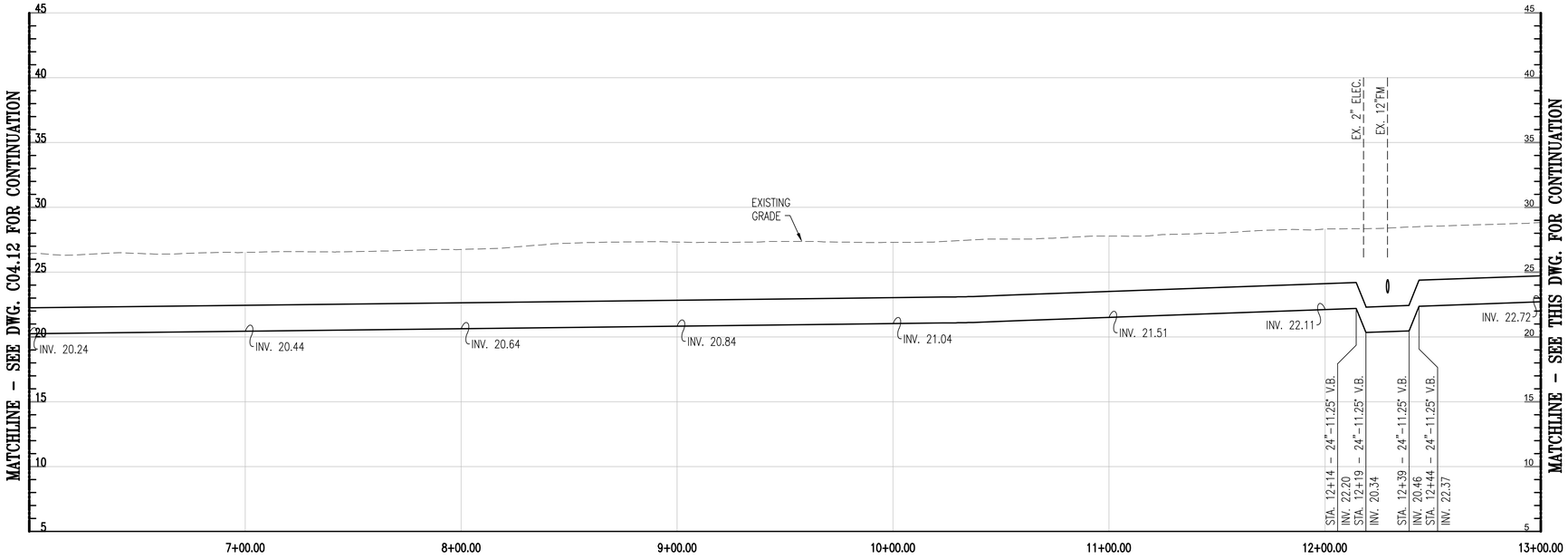

24" FM FROM FILTERED IRRIGATION
37 C04.13 PUMP STATION TO IRRIGATION LOOP (CONT.) 1
H: 1"=30' V: 1"=5'

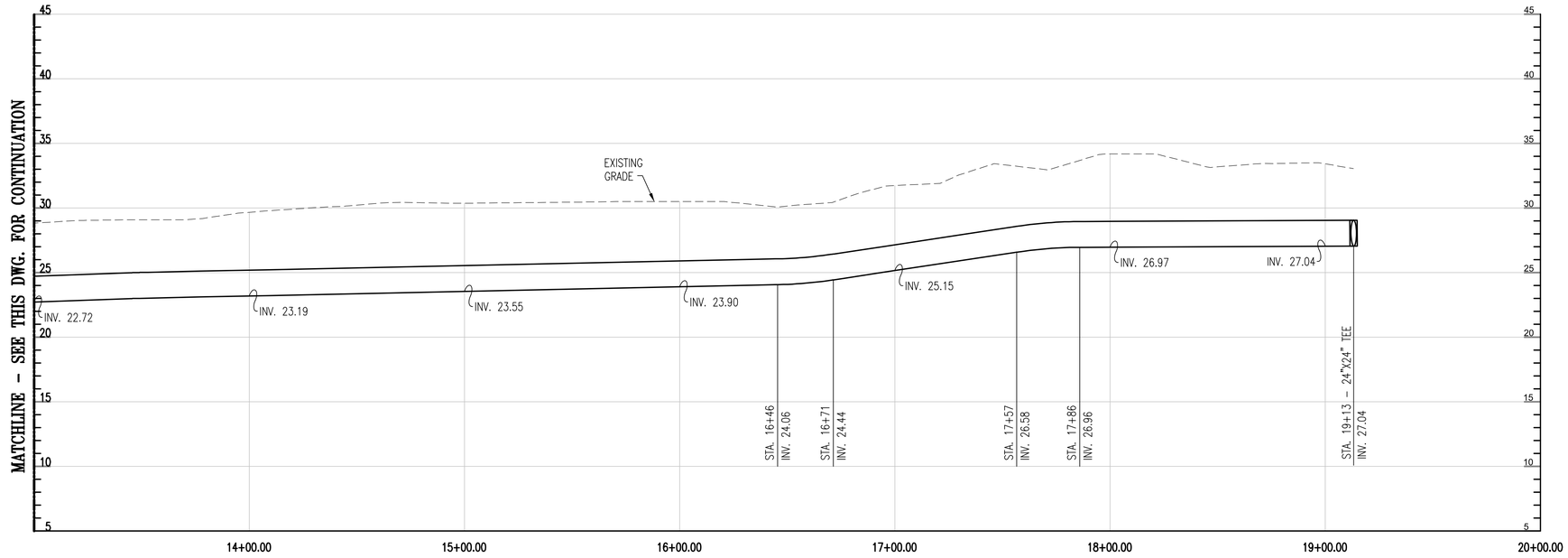

24" FM FROM FILTERED IRRIGATION
37 C04.13 PUMP STATION TO IRRIGATION LOOP (CONT.) 1
H: 1"=30' V: 1"=5'

X CONSTRUCTION NOTE

1. RESTRAIN ALL FITTINGS AND JOINTS WITHIN 40' OF ANY FITTING.

REVISIONS

CLIENT INFORMATION

SUSSEX COUNTY, DE
ENGINEERING
DEPARTMENT

INLAND BAYS RWF
PHASE #2 EXPANSION:
CONTRACT S19-10

KEY PLAN

GRAPHIC SCALES

0 15' 30' 60'
SCALE: 1" = 30'

0 5' 10'
SCALE: 1" = 5'

SIGNATURE

WILFRIED F. HINZ
LICENSED
No. 18956
7/9/19
DELAWARE
PROFESSIONAL ENGINEER

WRA
Whitman, Requardt & Associates, LLP
801 South Caroline Street, Baltimore, Maryland 21231

UTILITY PROFILES

DRAWING NO.

C04.13

SCALE: AS SHOWN
DATE: JULY 2019 SHEET 32 OF 229
DES: FJB DRAWN: JAM CHECK: WFH

C:\Users\jmoyer\appdata\local\temp\AcPublish_564\14256026C4-02.dwg

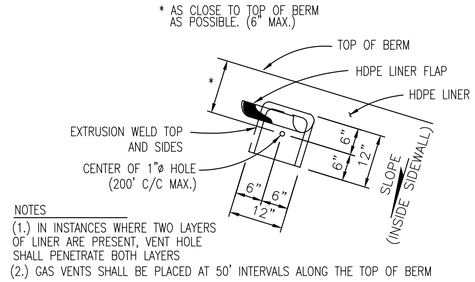

A C05.01 **VENT POCKET DETAIL**
SCALE: NONE

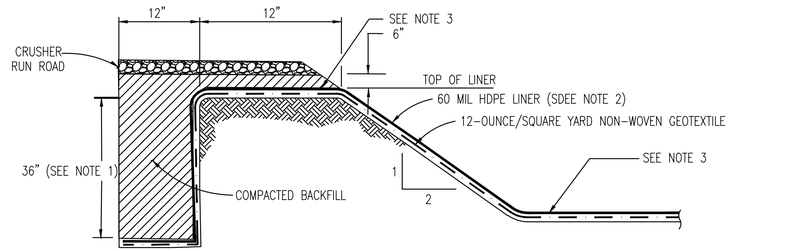

NOTES
(1.) WHERE OBSTRUCTIONS ARE ENCOUNTERED FOR THE TRENCH INSTALLATION, LINER AND GEOTEXTILE SHALL BE INSTALLED UNINTERRUPTED UNDERNEATH OBSTRUCTION.
(2.) LINER SHALL BE DOUBLE-SIDED TEXTURE.
(3.) A CERTIFIED SURVEY OF SUBGRADE FOR BOTTOM AND TOP OF LAGOON LINER IS REQUIRED PRIOR TO LINER INSTALLATION..

B C05.01 **LINER TRENCH DETAIL**
SCALE: NONE

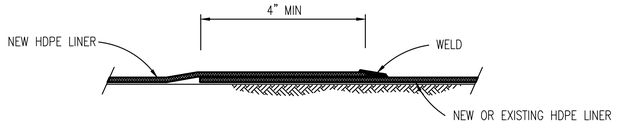

C C05.01 **TYPICAL FILLET EXTRUSION WELD DETAIL**
SCALE: NONE

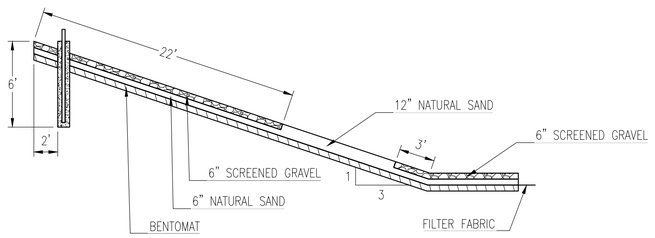

D C05.01 **EXISTING SLUDGE STORAGE LAGOON LINING**
SCALE: NONE

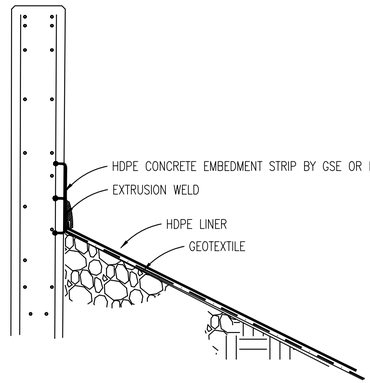

NOTE
EMBEDMENT STRIP TO BE PROVIDED AT ALL INTERFACES BETWEEN LINER AND CONCRETE STRUCTURES, PIERS, AND AERATION EQUIPMENT SUPPORTS

E C05.01 **TYPICAL LINER TO CONCRETE STRUCTURE DETAIL**
SCALE: NONE

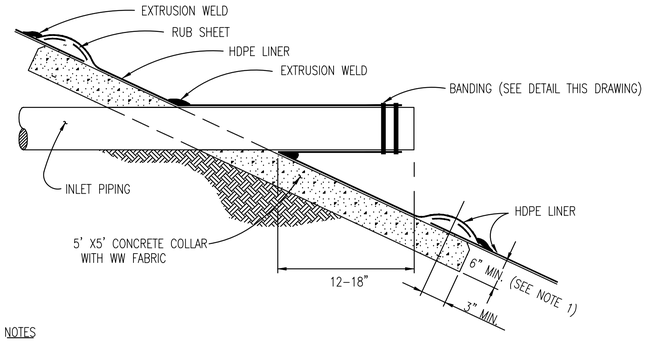

NOTES
(1.) EARTH ADJACENT TO CONCRETE COLLAR TO BE WELL COMPACTED TO PREVENT FUTURE DIFFERENTIAL SETTLEMENT. ALL CONCRETE COLLARS TO BE CHAMFERED A MINIMUM OF 1" (TYP.) @ ALL CORNERS IN CONTACT WITH LINER.
(2.) CONCRETE COLLAR SHALL BE CENTERED AROUND INSTALLED PIPE.
(3.) THE USE OF A CONCRETE EMBEDMENT STRIP SHALL BE INSTALLED ALONG THE PERIMETER OF THE CONCRETE COLLAR.
(4.) ALL LINER INSTALLATIONS AND PIPE PENETRATIONS SHALL BE CERTIFIED AS BEING INSTALLED IN ACCORDANCE WITH THE CONTRACT DOCUMENTS BY AN INDEPENDENT THIRD PARTY INSPECTION AGENCY.

G C05.01 **TYPICAL PIPE PENETRATION DETAIL**
SCALE: NONE

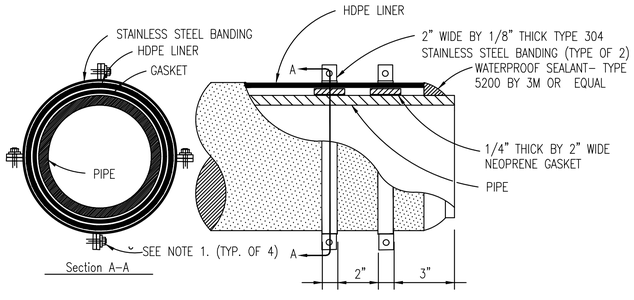

NOTES:
(1.) SECURE FOUR QUADRANTS WITH 3/8" TYPE 304 STAINLESS STEEL NUTS AND BOLTS, WITH SPACERS INSTALLED AS REQUIRED TO INSURE TIGHT FIT IS MAINTAINED AROUND PERIMETER OF THE PIPE CONNECTION. SPACERS SHALL BE SIZED FOR BOLTS INSTALLED, WITH THE BOTTOM OF THE SPACER MATCHING THE INSIDE DIAMETER OF THE CLAMP.
(2.) STEEL BANDING SHALL BE SIZED APPROXIMATELY 0.3 INCHES LARGER THAN THE PIPE O.D. TO ALLOW PROPER INSTALLATION OF BAND, BOOT, AND GASKET AROUND THE PIPE, WHILE ACCOUNTING/ALLOWING FOR GASKET COMPRESSION.
(3.) INSTALLATION OF SECOND BAND SHALL BE AT APPROXIMATELY 45 DEGREES FROM THE FIRST BAND TO OFFSET BAND EXTENSION EARS.

H C05.01 **TYPICAL PIPE PENETRATION SEAL DETAIL**
SCALE: NONE

REVISIONS

CLIENT INFORMATION

SUSSEX COUNTY, DE ENGINEERING DEPARTMENT

INLAND BAYS RWF PHASE #2 EXPANSION: CONTRACT S19-10

KEY PLAN

GRAPHIC SCALES

SIGNATURE

FRIED F. HINZ — DELAWARE — No. 18956 — 7/9/19 — PROFESSIONAL ENGINEER

Whitman, Requardt & Associates, LLP
801 South Caroline Street, Baltimore, Maryland 21231

LAGOON DETAILS

DRAWING NO.
C05.01

SCALE: NOT TO SCALE		
DATE: JULY 2019	SHEET 34 OF 229	
DES: FJB	DRAWN: JAM	CHECK: WFH

PLOT DATE: 7/11/2019 4:23:24 PM PAGE SETUP: ---- PLOT STYLE: WRA_2006.CTB PAPER SIZE:11X17
NAME:\\WRA-1750\JOBS\A12600\12602\DWG\12602C05-01.dwg

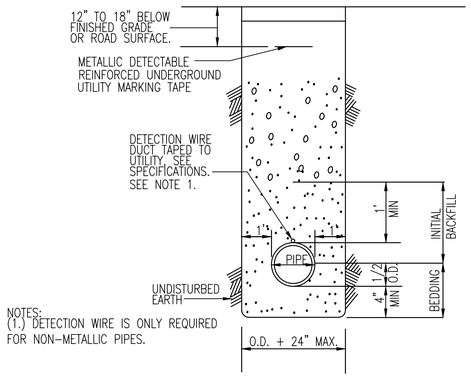

A C05.02 **UTILITY TRENCH DETAIL**
SCALE: NONE

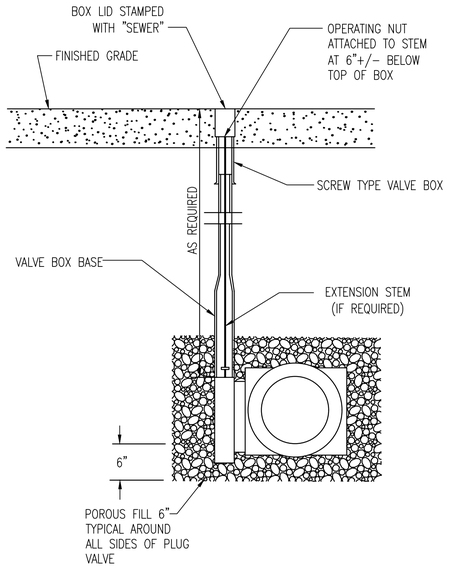

B C05.02 **ISOLATION PLUG VALVE DETAIL**
SCALE: NONE

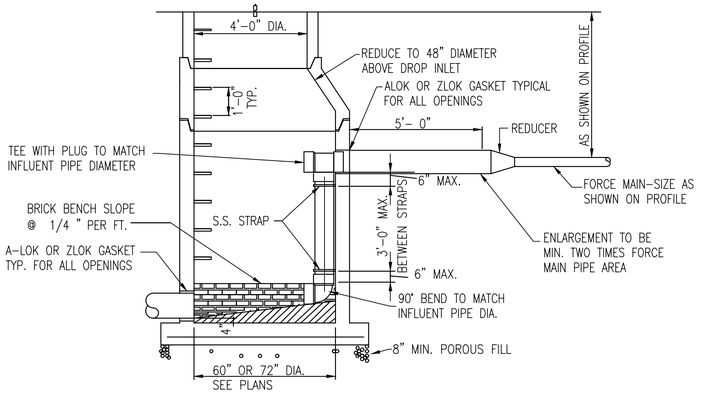

NOTE:
1. STAINLESS STEEL STRAPS SHALL BE 1/8 " X 1" MIN.
2. S.S. STRAP CONNECTORS SHALL BE EXPANSION BOLTS OR APPROVED EQUAL.
3. PROVIDE 72" DIAMETER MANHOLE WHEN TWO DROP CONNECTIONS OCCUR IN ONE MANHOLE.
4. A DROP MANHOLE IS NOT REQUIRED WHEN THE DIFFERENCE IS 2' OR LESS. FOR DIFFERENCES IN INVERTS OF 2' OR LESS, PROVIDE A SMOOTH TRANSITION WITH THE FLOW CHANNEL.

C C05.02 **INSIDE DROP MANHOLE DETAIL**
SCALE: NONE

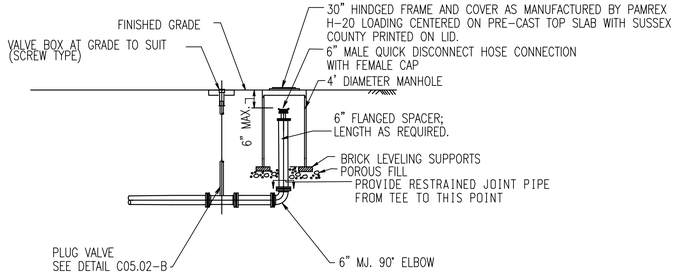

D C05.02 **FLOW DIVERSION ASSEMBLY DETAIL**
NO SCALE

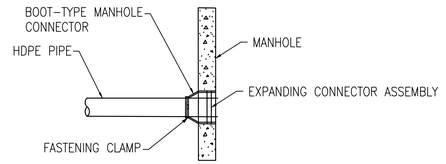

NOTE:
1. INSERT PIPE BEYOND THE INSIDE FACE OF THE MANHOLE WALL.
2. FASTENING CLAMP ASSEMBLY SHALL BE NON-MAGNETIC 304 STAINLESS STEEL.
3. EXPANDING CONNECTOR ASSEMBLY SHALL BE NON-MAGNETIC 300 SERIES STAINLESS STEEL.

E C05.02 **TRANSITION FROM HDPE TO MANHOLE DETAIL**
SCALE: NONE

REVISIONS		

CLIENT INFORMATION

SUSSEX COUNTY, DE ENGINEERING DEPARTMENT

INLAND BAYS RWF PHASE #2 EXPANSION: CONTRACT S19-10

KEY PLAN

GRAPHIC SCALES

SIGNATURE



Whitman, Requardt & Associates, LLP
801 South Caroline Street, Baltimore, Maryland 21231

UTILITY DETAILS

DRAWING NO.
C05.02

SCALE: NOT TO SCALE		
DATE: JULY 2019	SHEET 35 OF 229	
DES: FJB	DRAWN: JAM	CHECK: WFH

PLOT DATE: 7/11/2019 4:23:25 PM PAGE SETUP: ----- PLOT STYLE: WRA_2006.CTB PAPER SIZE:11X17
N:\LAND\S19-10\01-CADD\01-DRAWINGS\C05.02-UTILITY DETAILS.dwg

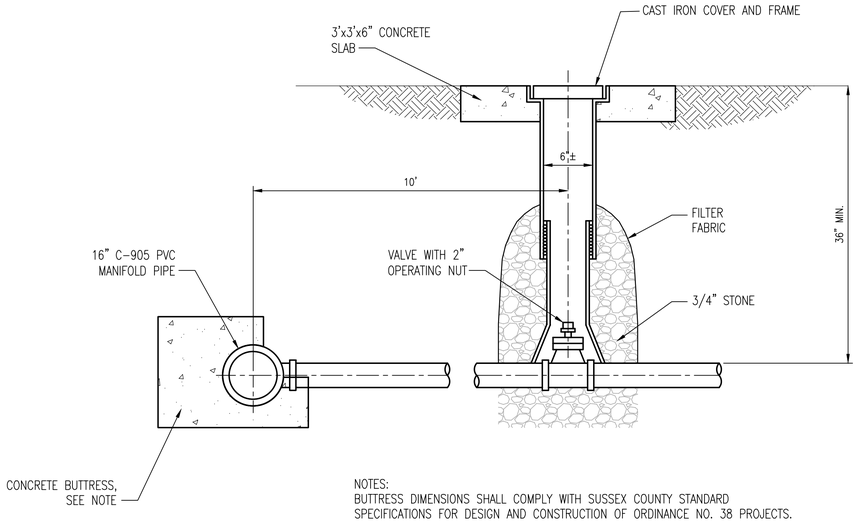

NOTES:
BUTTRESS DIMENSIONS SHALL COMPLY WITH SUSSEX COUNTY STANDARD SPECIFICATIONS FOR DESIGN AND CONSTRUCTION OF ORDINANCE NO. 38 PROJECTS.

A C05.03 **SPRAY LATERAL TYPICAL CUTOFF VALVE DETAIL**
SCALE: NONE

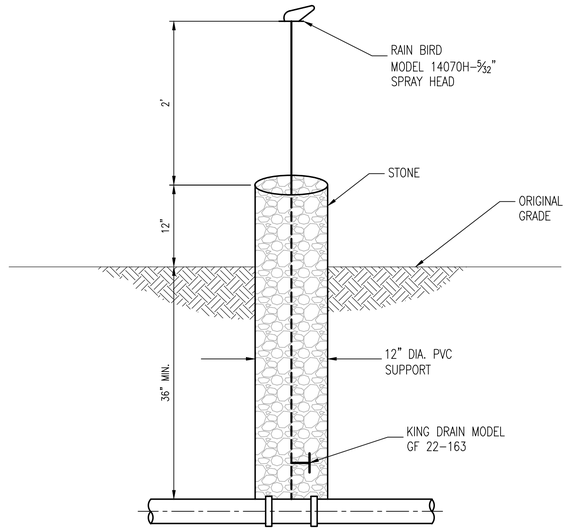

B C05.03 **TYPICAL SPRAY HEAD DETAIL**
SCALE: NONE

REVISIONS		

CLIENT INFORMATION

SUSSEX COUNTY, DE
ENGINEERING
DEPARTMENT

INLAND BAYS RWF
PHASE #2 EXPANSION:
CONTRACT S19-10

KEY PLAN

GRAPHIC SCALES

SIGNATURE

ALFRIED F. HINZ — DELAWARE — No. 18956 — 7/9/19 — PROFESSIONAL ENGINEER

Whitman, Requardt & Associates, LLP
801 South Caroline Street, Baltimore, Maryland 21231

SPRAY FIELD
DETAILS

DRAWING NO.

C05.03

SCALE: NOT TO SCALE		
DATE: JULY 2019	SHEET 36 OF 229	
DES: FJB	DRAWN: FJB	CHECK: WFH

PLOT DATE: 7/11/2019 4:23:26 PM PAGE SETUP: ---- PLOT STYLE: WRA_2006.CTB PAPER SIZE:11X17
N:\AMPS\SC-1268\CADD\ACAD\2019\SC-1268-C05.03.dwg

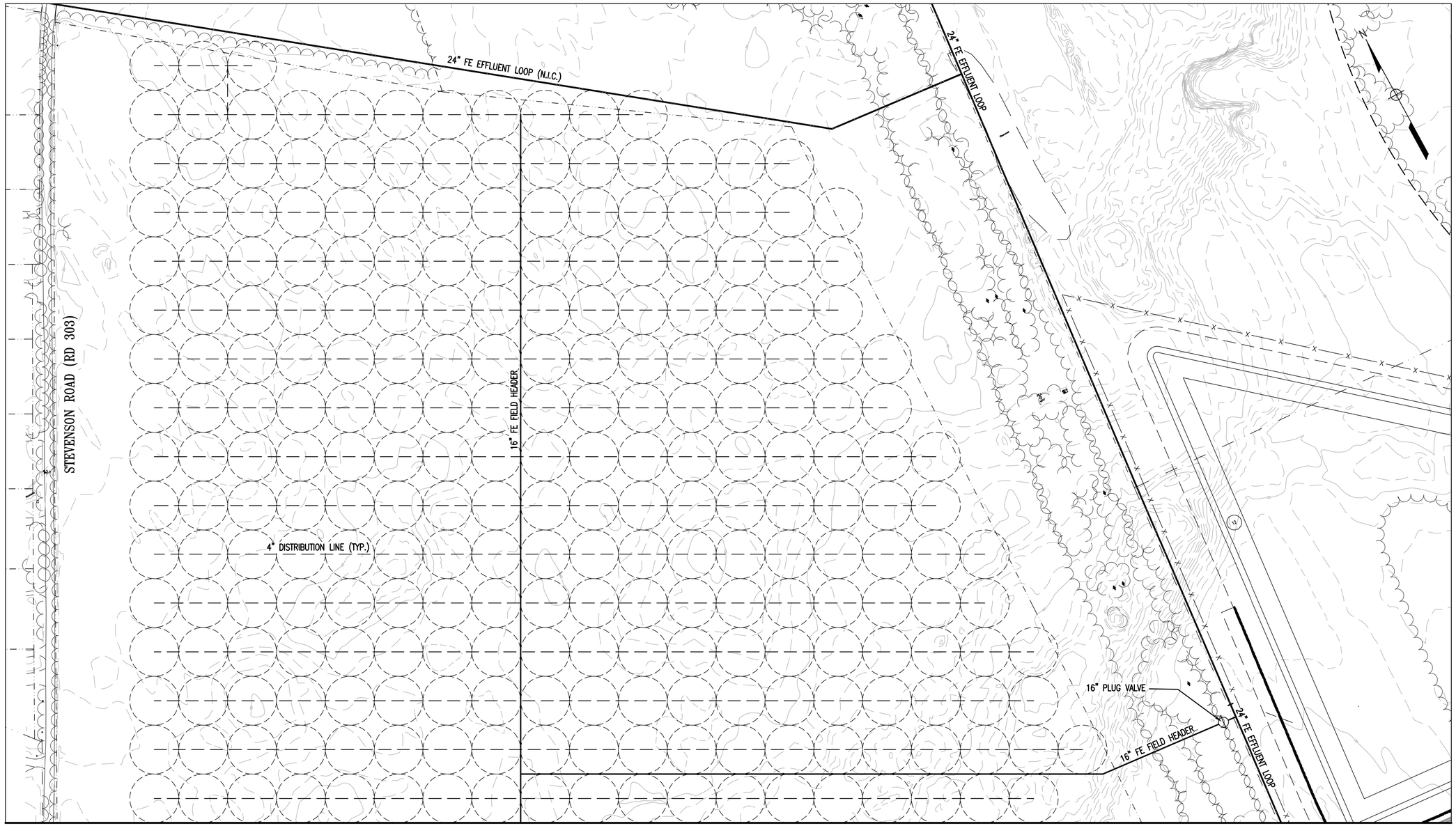

MATCHLINE A-A, SEE DWG. C07.02

SITE PLAN

SCALE: 1" = 100'

GENERAL NOTES

1. ALL HEADER AND DISTRIBUTION LINES SHALL BE INSTALLED WITH 3.5' MINIMUM COVER.
2. ALL DISTRIBUTION LINES SIZE ARE 4 INCHES.
3. SEE DRAWING C05.03 FOR SPRAY FIELD DETAILS
4. THESE GENERAL NOTES ARE APPLICABLE TO ALL FIXED HEAD LAYOUT DWGS.

C:\Users\whinz\appdata\local\temp\AcPublish_9636\142560026C7-01.dwg

REVISIONS

CLIENT INFORMATION

SUSSEX COUNTY, DE
ENGINEERING
DEPARTMENT

INLAND BAYS RWF
PHASE #2 EXPANSION:
CONTRACT S19-10

KEY PLAN

GRAPHIC SCALES

0 50' 100' 200'
SCALE: 1" = 100'

SIGNATURE

FRIED F. HINZ
GENERAL
No. 18956
DELAWARE
PROFESSIONAL ENGINEER

Whitman, Requardt & Associates, LLP
801 South Caroline Street, Baltimore, Maryland 21231

SITE PLAN - ZONE 1
FIXED SPRAY HEAD LAYOUT

DRAWING NO.

C07.01

SCALE: AS SHOWN		
DATE: JULY 2019		SHEET 50 OF 229
DES: FJB	DRAWN: JAM	CHECK: WFH

MATCHLINE A-A, SEE DWG. C07.01

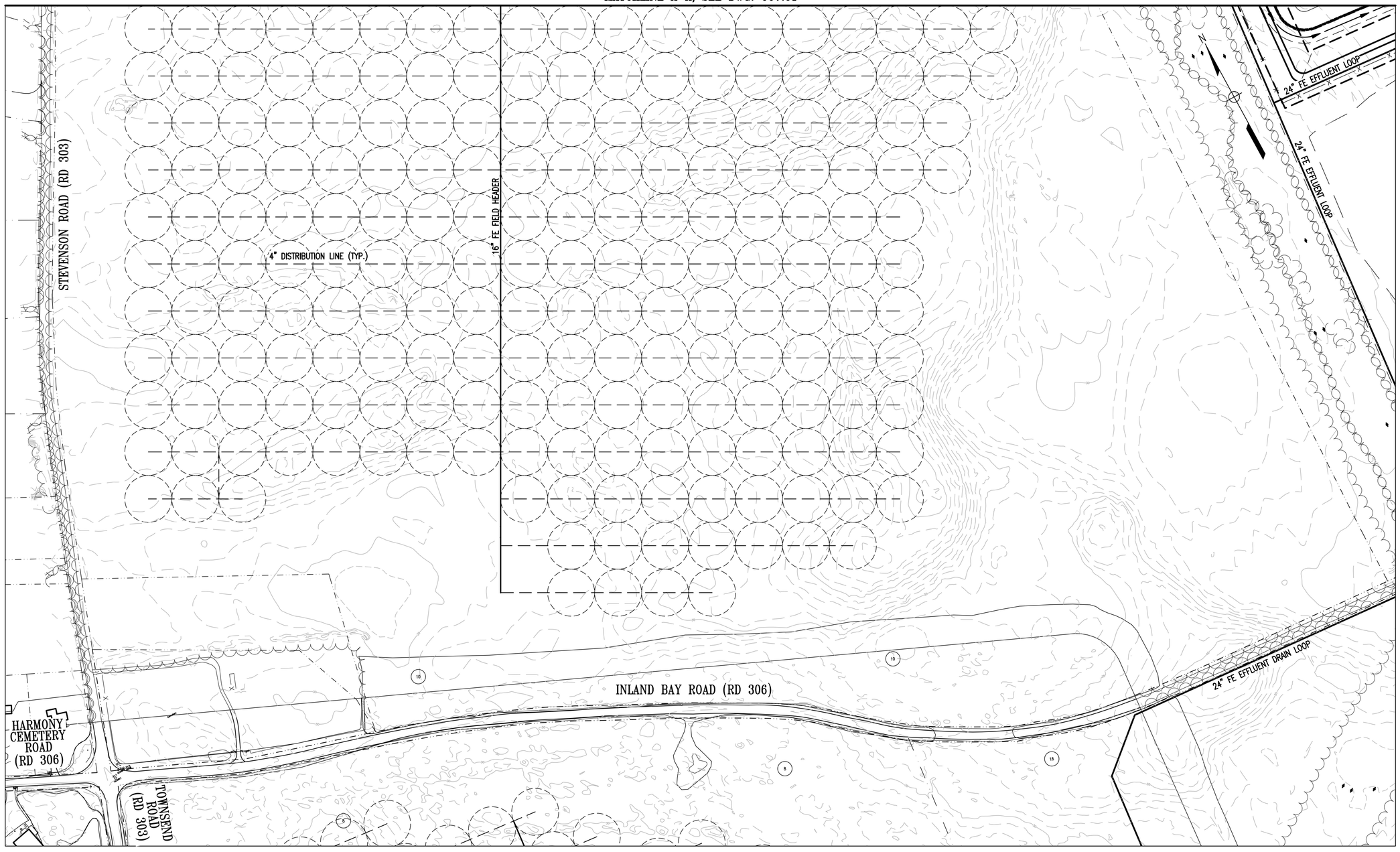

SITE PLAN

SCALE: 1" = 100'

C:\Users\whinz\appdata\local\temp\AcPublish_9636\1425602677-01.dwg

REVISIONS		

CLIENT INFORMATION

SUSSEX COUNTY, DE
ENGINEERING
DEPARTMENT

INLAND BAYS RWF
PHASE #2 EXPANSION:
CONTRACT S19-10

KEY PLAN

GRAPHIC SCALES

0 50' 100' 200'

SCALE: 1" = 100'

SIGNATURE

ALFRIED F. HINZ
No. 18956
DELAWARE
PROFESSIONAL ENGINEER

Whitman, Requardt & Associates, LLP
801 South Caroline Street, Baltimore, Maryland 21231

SITE PLAN - ZONE 1
FIXED SPRAY HEAD LAYOUT

DRAWING NO.

C07.02

SCALE: AS SHOWN		
DATE: JULY 2019	SHEET 51 OF 229	
DES: FJB	DRAWN: JAM	CHECK: WFH

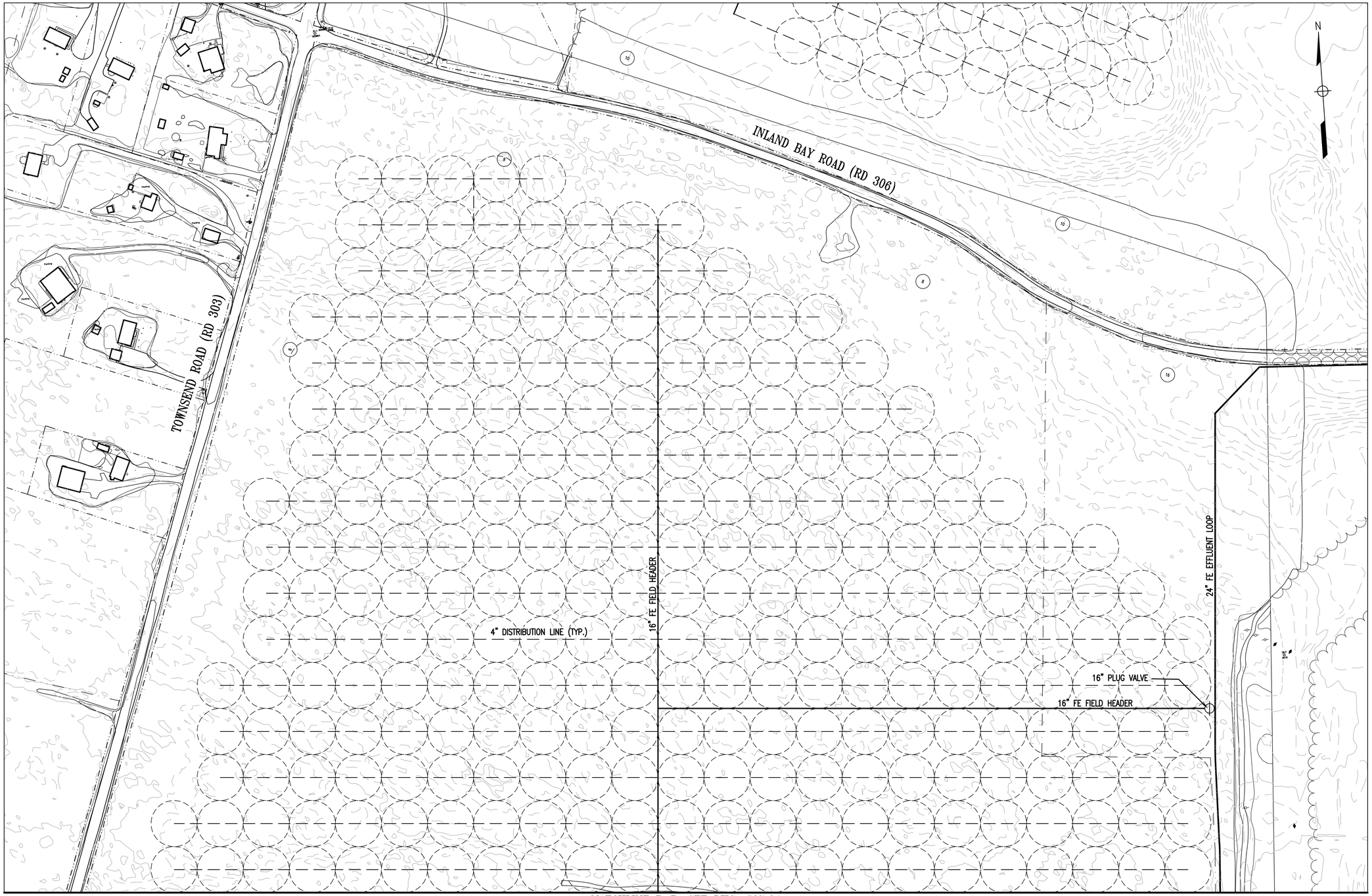

MATCHLINE B-B, SEE DWG. C07.04

SITE PLAN

SCALE: 1" = 100'

REVISIONS

CLIENT INFORMATION

SUSSEX COUNTY, DE
ENGINEERING
DEPARTMENT

INLAND BAYS RWF
PHASE #2 EXPANSION:
CONTRACT S19-10

KEY PLAN

GRAPHIC SCALES

0 50' 100' 200'
SCALE: 1" = 100'

SIGNATURE

WILFRIED F. HINZ
LICENSED
No. 18956
7/9/19
DELAWARE
PROFESSIONAL ENGINEER

Whitman, Requardt & Associates, LLP
801 South Caroline Street, Baltimore, Maryland 21231

SITE PLAN - ZONE 2
FIXED SPRAY HEAD LAYOUT

DRAWING NO.

C07.03

SCALE: AS SHOWN		
DATE: JULY 2019	SHEET 52 OF 229	
DES: FJB	DRAWN: JAM	CHECK: WFH

C:\Users\whinz\appdata\local\temp\AcPublish_9636\14256026C7-01.dwg

MATCHLINE B-B, SEE DWG. C07.03

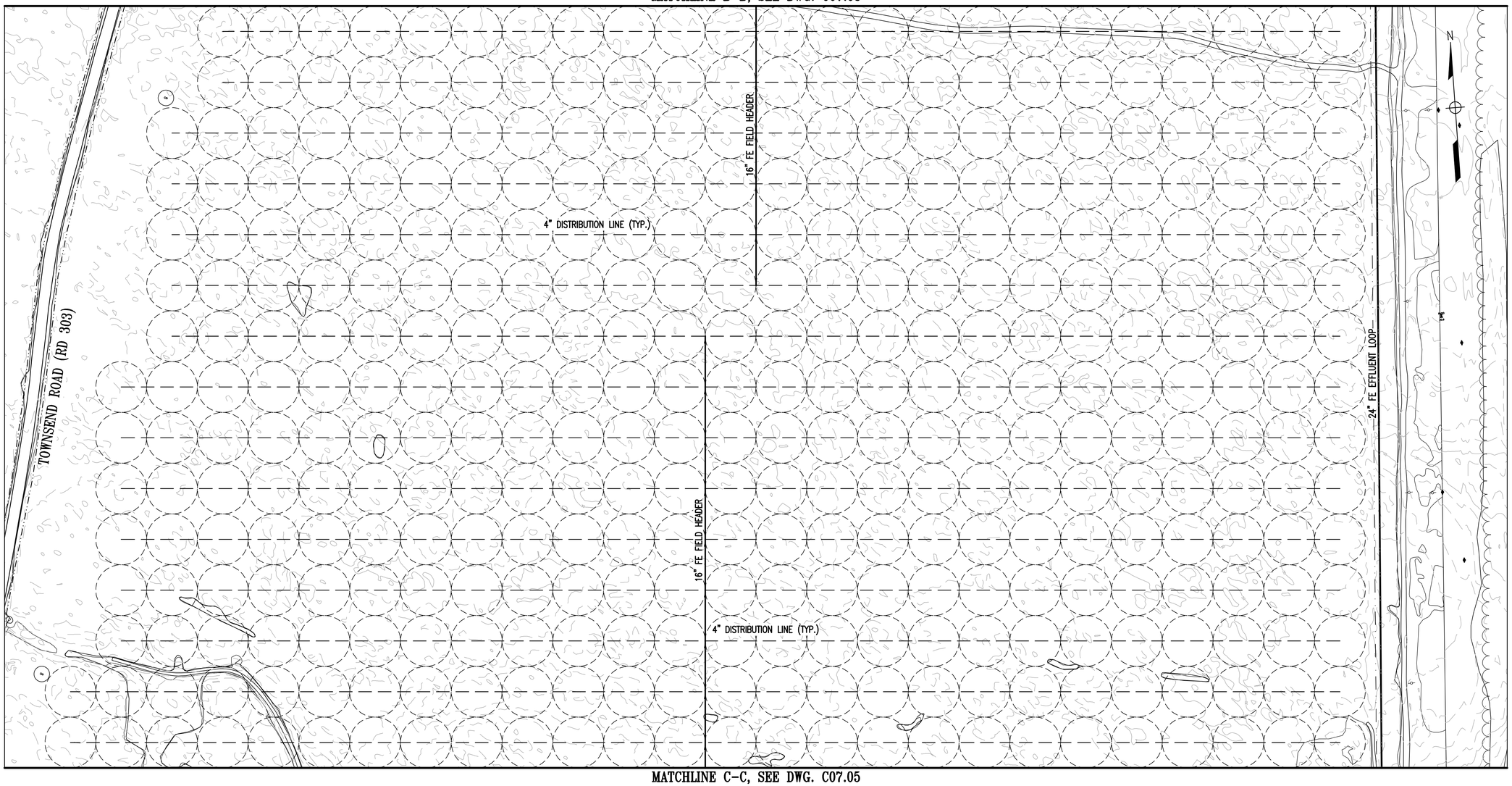

MATCHLINE C-C, SEE DWG. C07.05

SITE PLAN

SCALE: 1" = 100'

REVISIONS

CLIENT INFORMATION

SUSSEX COUNTY, DE
ENGINEERING
DEPARTMENT

INLAND BAYS RWF
PHASE #2 EXPANSION:
CONTRACT S19-10

KEY PLAN

GRAPHIC SCALES

0 50' 100' 200'

SCALE: 1" = 100'

SIGNATURE

WILFRIED F. HINZ
LICENSED
No. 18956
7/9/19
DELAWARE
PROFESSIONAL ENGINEER

Whitman, Requardt & Associates, LLP
801 South Caroline Street, Baltimore, Maryland 21231

SITE PLAN - ZONE 2
FIXED SPRAY HEAD LAYOUT

DRAWING NO.

C07.04

SCALE: AS SHOWN		
DATE: JULY 2019	SHEET 53 OF 229	
DES: FJB	DRAWN: JAM	CHECK: WFH

C:\Users\whinz\appdata\local\temp\AcPublish_9636\14256026C7-01.dwg

MATCHLINE C-C, SEE DWG. C07.04

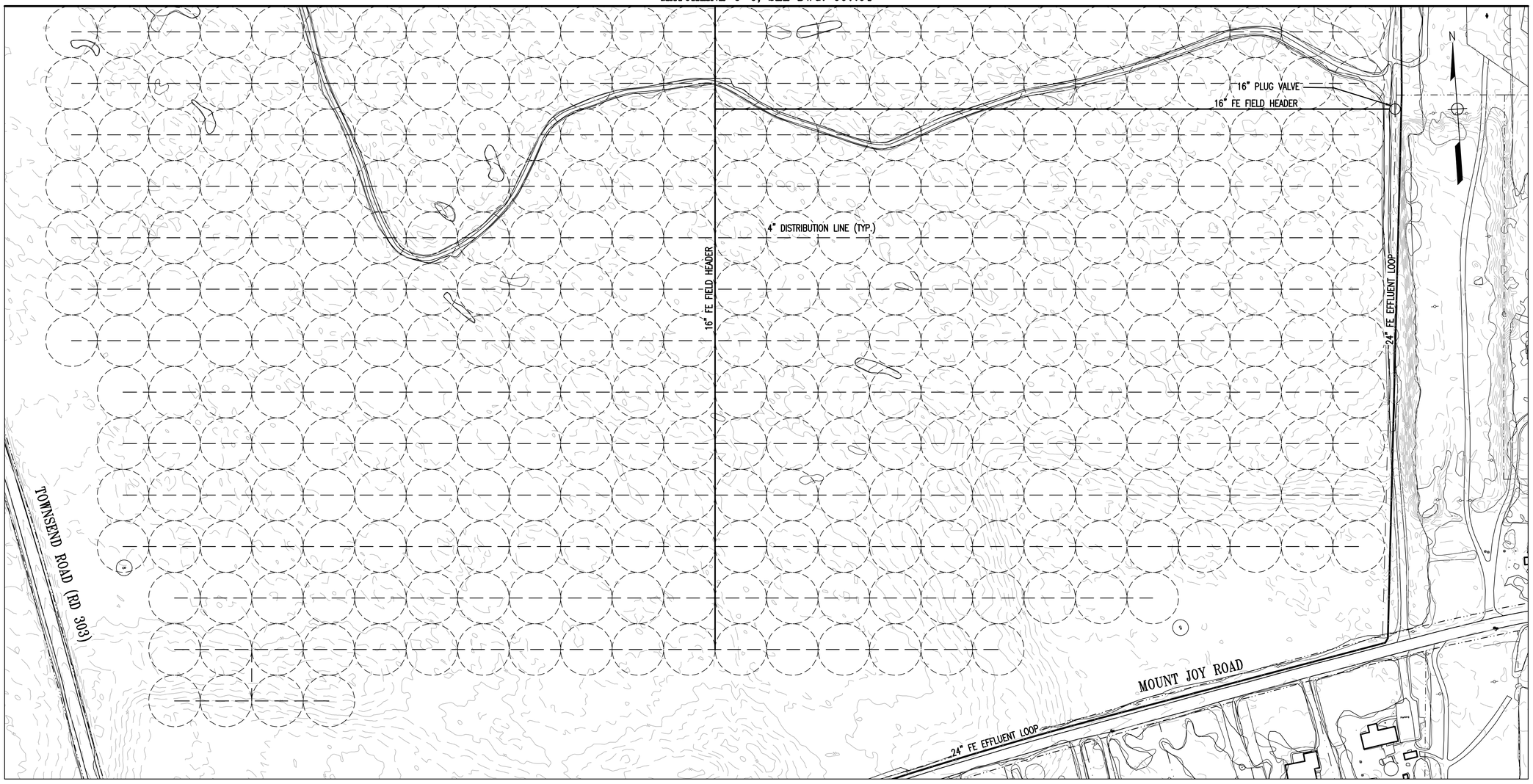

SITE PLAN

SCALE: 1" = 100'

C:\Users\whinz\appdata\local\temp\AcPublish_9636\142560826C7-01.dwg

REVISIONS		

CLIENT INFORMATION

SUSSEX COUNTY, DE
ENGINEERING
DEPARTMENT

INLAND BAYS RWF
PHASE #2 EXPANSION:
CONTRACT S19-10

KEY PLAN

GRAPHIC SCALES

0 50' 100' 200'

SCALE: 1" = 100'

SIGNATURE

WILLARD F. HINZ
GENERAL
No. 18956
7/9/19
DELAWARE
PROFESSIONAL ENGINEER

Whitman, Requardt & Associates, LLP
801 South Caroline Street, Baltimore, Maryland 21231

SITE PLAN - ZONE 2
FIXED SPRAY HEAD LAYOUT

DRAWING NO.

C07.05

SCALE: AS SHOWN		
DATE: JULY 2019	SHEET 54 OF 229	
DES: FJB	DRAWN: JAM	CHECK: WFH

ARCHITECTURAL/STRUCTURAL ABBREVIATIONS

ABV	ABOVE
AC	AIR CONDITIONING (CONDITIONER)
AD	ACCESS DOOR (OR PANEL)
ADA	AMERICAN WITH DISABILITIES ACT
ADD	ADDENDUM
ADJ	ADJACENT
AES	ABOVE EXISTING SLAB
AF	ACCESS FLOOR
AFF	ABOVE FINISHED FLOOR
AHU	AIR HANDLING UNIT
ALT	ALTERNATE
ALUM	ALUMINUM
APC	ACOUSTICAL PANEL CEILING (LAY-IN)
APPROX	APPROXIMATE
ARCH	ARCHITECTURAL
ASB	ASBESTOS
ASP	ASPHALT
ATC	ACOUSTICAL TILE CEILING (CONCEALED SUSPENSION)
AWP	ACOUSTICAL WALL PANEL
BB	BULLETIN BOARD (GLASS COVERED)
BC	BOTTOM OF CURB
BD	BOARD
BEN	BENCH
BETW	BETWEEN
BLDG	BUILDING
BLKG	BLOCKING
BM	BEAM
BOT	BOTTOM
BR	BRICK
BR/S	BACKER ROD AND SEALANT
C	CONDUIT
C/C	CENTER TO CENTER
CB	CHALKBOARD
CAB	CABINET
CARP	CARPET
CARPT	CARPET TILE
CEM	CEMENT
CER	CERAMIC
CI	CAST IRON
CG	CORNER GUARD
CH	CEILING HEIGHT
CJ	CONTROL JOINT
CL	CENTERLINE
CLOS	CLOSET
CLG	CEILING
CLR	CLEAR
CMP	CORRUGATED METAL PIPE
CMU	CONCRETE MASONRY UNIT
CO	CLEAR OPENING
COL	COLUMN
COMP	COMPACTED
CONC	CONCRETE
CONSTR	CONSTRUCTION
CONT	CONTINUOUS
CONV	CONVECTOR
CR	COLD ROLLED
CSK	COUNTERSUNK
CSPE	CHLOROSULFONATED POLYETHYLENE ELASTOMER
CT	CERAMIC TILE
CTR	COUNTER
CW	COLD WATER
CX	CONNECT TO EXISTING
D	DOUBLE
DEG	DEGREE
DEMO	DEMOLITION
DET	DETAIL
DF	DRINKING FOUNTAIN
DIA	DIAMETER
DIR	DIRECTORY
DN	DOWN
DO	DOOR OPENING
DR	DOOR
DS	DOWNSPOUT
DWG	DRAWING
E	EAST
EA	EACH
EF	EACH FACE
EFS	EXTERIOR FINISH SYSTEM
EIFS	EXTERIOR INSULATION AND FINISH SYSTEM
EJ	EXPANSION JOINT
EL	ELEVATION
ELEC	ELECTRIC OR ELECTRICAL
ELEV	ELEVATOR
EM	ENTRY MAT
EP	ETHYLENE PROPYLENE-BASED (SINGLE PLY ROOFING)
EPB	ELECTRICAL PANEL BOX
EPDM	ETHYLENE-PROPYLENE-DIENE MEMBRANE
EPS	EXPANDED POLYSYTRENE
EPX	EPOXY
EQ	EQUAL
EQUIP	EQUIPMENT
EST	ESTIMATE
EUH	ELECTRIC UNIT HEATER
EW	EACH WAY
EWC	ELECTRIC WATER COOLER
EWCA	ELECTRIC WATER COOLER - ACCESSIBLE
EXIST	EXISTING
EXP	EXPANSION OR EXPOSED
EXT	EXTERIOR
F	FILLER
FC	FAN COIL UNIT
FD	FLOOR DRAIN OR FIRE DAMPER
FDR	FOLDING DOOR (WOOD OR FABRIC)
FE	FIRE EXTINGUISHER ON BRACKET
FEC	FIRE EXTINGUISHER CABINET
FH	FLATHEAD
FIRE T	FIRE TREATED
FIN	FINISH OR FINISHED
FIX	FIXTURE
FL	FLASHING
FLM	FULL LENGTH MIRROR
FLR	FLOOR
FR	FIRE RATED
FRC	FIBER-REINFORCED COATING
FT	FOOTING
FTG	FABRIC-WRAPPED PANEL (FABRICATED;
FWP	TACKABLE; ACOUSTICAL PANEL)
GA	GAUGE
GALV	GALVANIZED
GB	GRAB BAR
GEN	GENERAL
GL	GLASS
GLM	GLASS UNIT MASONRY (GLASS BLOCK)
GMU	GLAZED MASONRY UNIT
GRD	GROUND
GP	GYPSUM PLASTER
GRT	GROUT
GVP	GYPSUM VENEER PLASTER
GYPB	GYPSUM BOARD (WALL OR CEILING)
GYPBS	GYPSUM BOARD SHAFT-WALL ASSEMBLY
H	HEAD
HB	HORIZONTAL BLIND
HDW	HARDWARE
HM	HOLLOW METAL
HOR	HORIZONTAL
HP	HIGH POINT
HR	HOUR
HT	HEIGHT
HTR	HEATER
HVAC	HEATING, VENTILATION AND AIR CONDITIONING
HW	HOT WATER
ID	INSIDE DIAMETER
IN	INCH
INSUL	INSULATION
INT	INTERIOR
INV	INVERT
J	JAMB
JC	JANITOR'S CLOSET
JT	JOINT
KIT	KITCHEN
L	LINTEL
LAB	LABORATORY
LAV	LAVATORY
LG	LONG
LIN	LINOLEUM FLOOR COVERING
LLV	LOG LEG VERTICAL
LOC	LOCATION
LOCK	LOCKER
LP	LOW POINT
LT	LIGHT
LTG	LIGHTING
LV	LOUVER
M	MIRROR OR MEN
MACH	MACHINE
MAS	MASONRY
MATL	MATERIAL
MAX	MAXIMUM
MC	MEDICINE CABINET
MDF	MEDIUM DENSITY
MFB	FIBERBOARD
MECH	MECHANICAL
MET	METAL
MFR	MANUFACTURER
MH	MANHOLE
MIN	MINIMUM
MISC	MISCELLANEOUS
MK	MARK
MO	MASONRY OPENING
MP	METAL PANEL
MR	MR
MTD	MOUNTED
MTL	METAL
N	NORTH
NA	NOT APPLICABLE
ND	SANITARY NAPKIN DISPENSER
NIC	NOT IN CONTRACT
NO	NUMBER
NOM	NOMINAL
NTS	NOT TO SCALE
OA	OVERALL
OC	ON CENTER
OD	OUTSIDE DIAMETER
OFF	OFFICE
OHD	OVERHEAD COILING DOOR
OHG	OVERHEAD COING GRILLE
OP	OPERABLE PANEL PARTITION (HUNG FROM OVERHEAD TRACK)
OPNG	OPRNING
OPP	OPPOSITE
OZ	OUNCE
PAV	PAVER TILE
PC	PIECE
PF	PLASTIC FABRICATION
PL	PLATE
PLAM	PLASTIC LAMINATE
PLAS	PLASTER
PREFAB	PREFABRICATED
PRES T	PRESSURE TREATED
PT	PAINT
PTD	PAPER TOWEL DISPENSER
PTN	PARTITION
PVC	POLYVINYL CHLORIDE
QT	QUARRY TILE
QTY	QUANTITY
R	RISER OR RADIUS
RB	RESILIENT WALL BASE AND ACCESSORIES (VINYL BASE; RUBBER BASE; TREADS; NOSINGS; EDGINGS)
RCP	REINFORCED CONCRETE PIPE
RD	ROOF DRAIN OR ROUND
REQ'D	REQUIRED
RF	RESILIENT FLOORING (VINLY; RUBBER; VINYL
REF	REFERENCE
REINF	REINFORCED OR REINFORCING
RESF	RESINOUS FLOORING
REQ'D	REQUIRED
RET	RETURN
REV	REVISION
RH	ROBE HOOK
RM	ROOM
RO	ROUGH OPENING
RWR	RECESSED WASTE RECEPTACLE
RV	ROOF VENT
RX	REMOVE EXISTING
S	SILL, SOUTH OR SINGLE
SC	SPECIAL COATING)OTHER THAN PAINT SYSTEMS)
SCH	SCHEDULE OR SCHEDULED
SCR	SHOWER CURTAIN ROD
SD	SOAP DISPENSER OR STORM DRAIN
SECT	SECTION
SF	SQUARE FLOOR
SFT	STRUCTURAL FACING TILE
SH	SHOWER
SHT	SHEET
SIM	SIMILAR
SJ	STEEL JOIST
SND	SANITARY NAPKIN DISPOSAL
SOD	SECTIONAL OVERHEAD DOOR
SPEC	SPECIFICATIONS
SP	STAND PIPE
SQ	SQUARE
SS	STAINLESS STEEL OR SERVICE SINK
SSM	SOLID SURFACE MATERIAL
STAT	STATIONARY
STL	STEEL
STRUCT	STRUCTURAL OR STRUCTURE
SUSP	SUSPENDED
SWR	SURFACE-MOUNTED WASTE RECEPTACEL
SYS	SYSTEM
T	TILE
TOB	TOWEL BAR
T&B	TOP & BOTTOM
T&G	TONGUE & GROOVE
TC	TOP OF CURB
TCB	TOILET SEAT COVER DISPENSER
TEL	TELEPHONE
TER	TERRAZZO
TH	THICK
TO	TOP OF
TOS	TOP STEEL
TOW	TOP OF WALL
TP	TOILET PARTITION (WATER CLOSET; URINAL; SHOWER; SCREEN)
TPD	TOILET PAPER DISPENSER
TR	TREAD
TYP	TYPICAL
U	UNIT
UNO	UNLESS NOTED OTHERWISE
UR	URINAL
V	VENT
VB	VERTICAL BLIND
VDB	VISUAL DISPLAY BOARD (HINGED CONFERENCE UNIT)
VERT	VERTICAL
VEST	VESTIBULE
VIF	VERIFY IN FIELD
VP	VAPOR BARRIER
VS	VERTICAL STANDPIPE
W	WOMEN, WIDTH, WEST OR WOVEN
W/	WITH
WC	WATER CLOSET OR WALL COVERING (VINYL OR TEXTILE COVERING; WALL PAPER)
WD	WOOD
WH	WEEP HOLE
WHT	WHITE
WO	WINDOW OPENING
WP	WATERPROOF OR WORKING POINT
WR	WATER RESISTANT OR WASTE RECEPTACLE
WT	WIGHT
WWF	WOVEN WIRE FABRIC
YD	YARD
YR	TY

LEGEND

- BRICK
- CONCRETE MASONRY UNITS
- STRUCTURAL CLAY UNITS
- GYPSUM BOARD PARTITIONS
- WOOD-FINISH GRADE
- WOOD BLOCKING
- RIGID WALL/PERIMETER INSULATION
- RIGID ROOF INSULATION
- BATT INSULATION
- CONCRETE
- POROUS FILL
- EARTH
- METAL PATTERN
- DOOR NUMBER SYMBOL
- LOUVER NUMBER SYMBOL
- WINDOW NUMBER SYMBOL
- ROOM NUMBER SYMBOL
- WALL/BUILDING SECTION SYMBOL
- TITLE AND DETAIL REFERENCE SYMBOL
- PARTITION TYPES
- NUMBER-DRAWING NOTE
- REVISION
- NORTH ARROW (CONSTRUCTION NORTH)

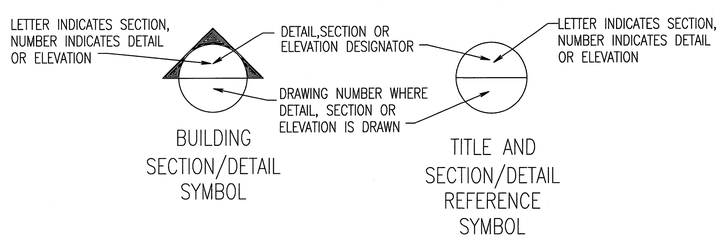

REVISIONS		

CLIENT INFORMATION

SUSSEX COUNTY, DE
ENGINEERING
DEPARTMENT

INLAND BAYS RWF
PHASE #2 EXPANSION:
CONTRACT S19-10

KEY PLAN

GRAPHIC SCALES

SIGNATURE

DOUGLAS A. KEED
NO. 6S-0005779
STATE OF DELAWARE
REGISTERED ARCHITECT

Whitman, Requardt & Associates, LLP
801 South Caroline Street, Baltimore, Maryland 21231

ARCHITECTURAL ABBREVIATIONS AND LEGEND

DRAWING NO.

A00.01

SCALE: NONE		
DATE: DEC. 2018	SHEET 48 OF 217	
DES: RK	DRAWN: NLE	CHECK: DAK

FILENAME: N:\14295-000\CADD\14295000A00-01.dwg
N:\14295-000\CADD\1429500A00-01.dwg
PLOT DATE: 12/19/2018 10:00:01 AM PLOTTED BY: NICOLE LEIGH BACHMANN PLOT STYLE: WRA_Color.ctb PLOT SCALE: 1.000000 PLOT ROTATED: NO

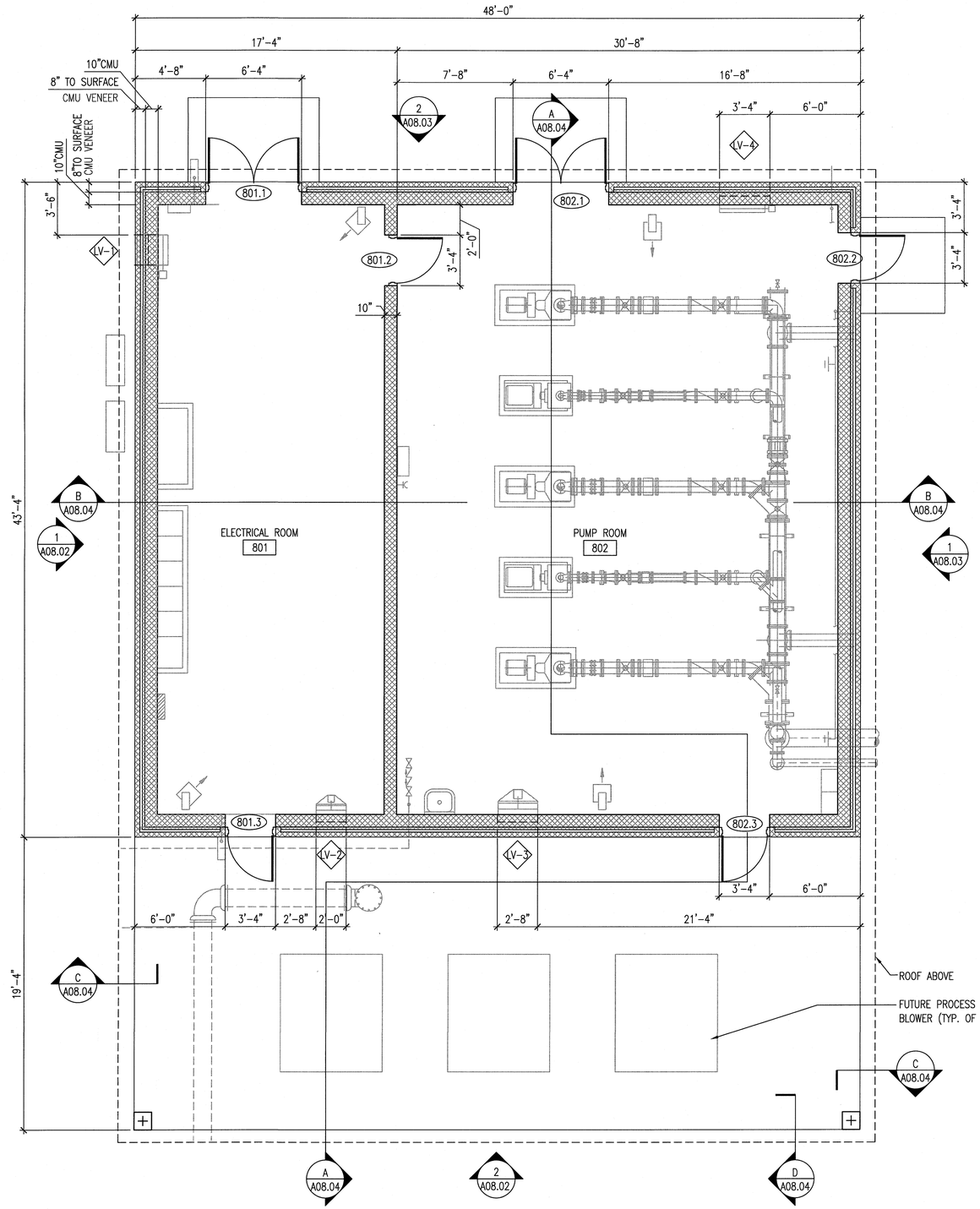

1 A08.01 PUMP AND BLOWER BUILDING No 2
SCALE: 1/4" = 1'-0"

REVISIONS

CLIENT INFORMATION

SUSSEX COUNTY, DE
ENGINEERING
DEPARTMENT

INLAND BAYS RWF
PHASE #2 EXPANSION:
CONTRACT S19-10

KEY PLAN

GRAPHIC SCALES

0 2' 4' 8'
SCALE: 1/4" = 1'-0"

SIGNATURE

DOUGLAS A. KELSO
NO. S5-0005779
STATE OF DELAWARE
LICENSED ARCHITECT

WRA
Whitman, Requardt & Associates, LLP
801 South Caroline Street, Baltimore, Maryland 21231

PUMP AND BLOWER
BUILDING NO.2 - PLAN

DRAWING NO.

A08.01

SCALE: AS SHOWN		
DATE: DEC. 2018	SHEET 49 OF 217	
DES: RK	DRAWN: NLE	CHECK: DAK

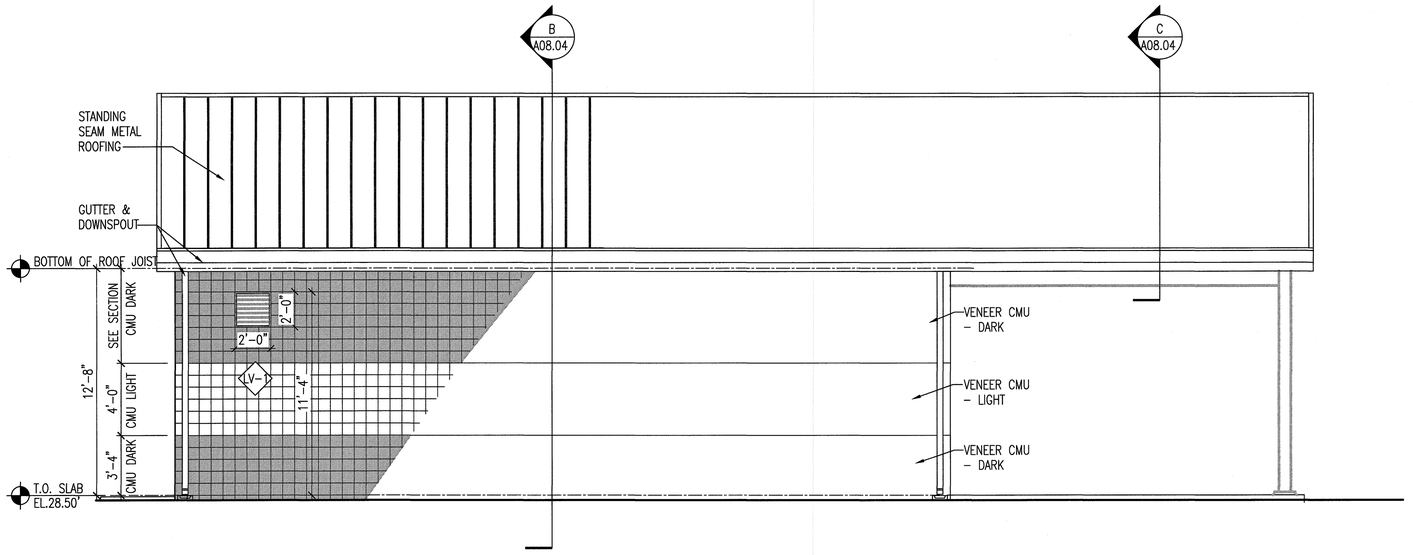

1 / A08.02

PUMP AND BLOWER BUILDING No 2 WEST ELEVATION

SCALE: 1/4" = 1'-0"
REF: A08.01

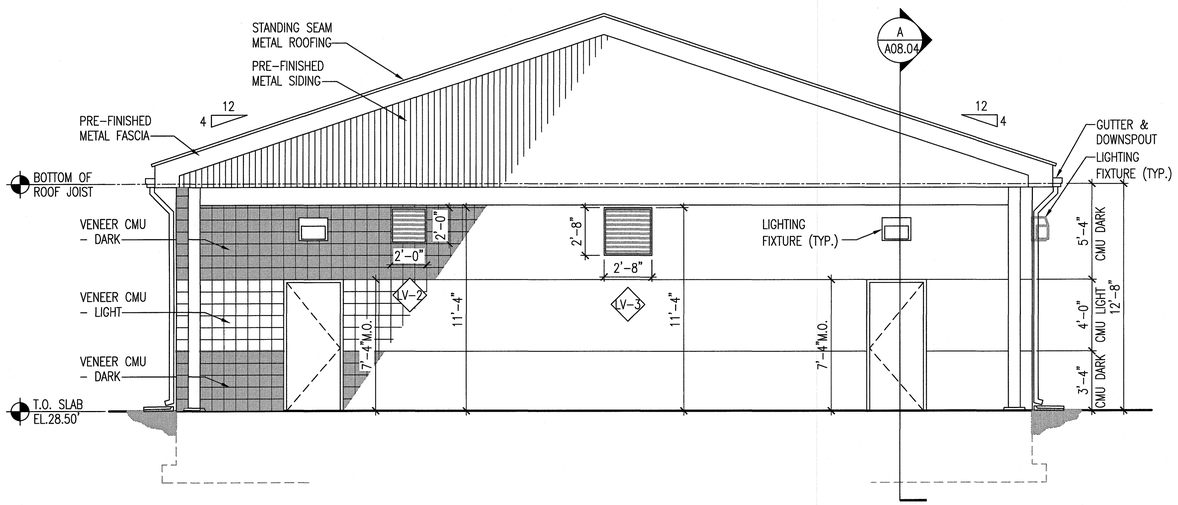

2 / A08.02

PUMP AND BLOWER BUILDING No 2 SOUTH ELEVATION

SCALE: 1/4" = 1'-0"
REF: A08.01

REVISIONS

CLIENT INFORMATION

SUSSEX COUNTY, DE
ENGINEERING
DEPARTMENT

INLAND BAYS RWF
PHASE #2 EXPANSION:
CONTRACT S19-10

KEY PLAN

GRAPHIC SCALES

0 2' 4' 8'
SCALE: 1/4" = 1'-0"

SIGNATURE

DELAWARE LICENSED ARCHITECT NO. S5-0006779

Whitman, Requardt & Associates, LLP
801 South Caroline Street, Baltimore, Maryland 21231

PUMP AND BLOWER BUILDING NO.2 - ELEVATIONS

DRAWING NO.

A08.02

SCALE: AS SHOWN		
DATE: DEC. 2018	SHEET 50 OF 217	
DES: RK	DRAWN: NLE	CHECK: DAK

FILENAME: N:\14256-006\CADD\14256564A08-02.DWG
N:\14256-028\CADD\14256928A08-02.dwg

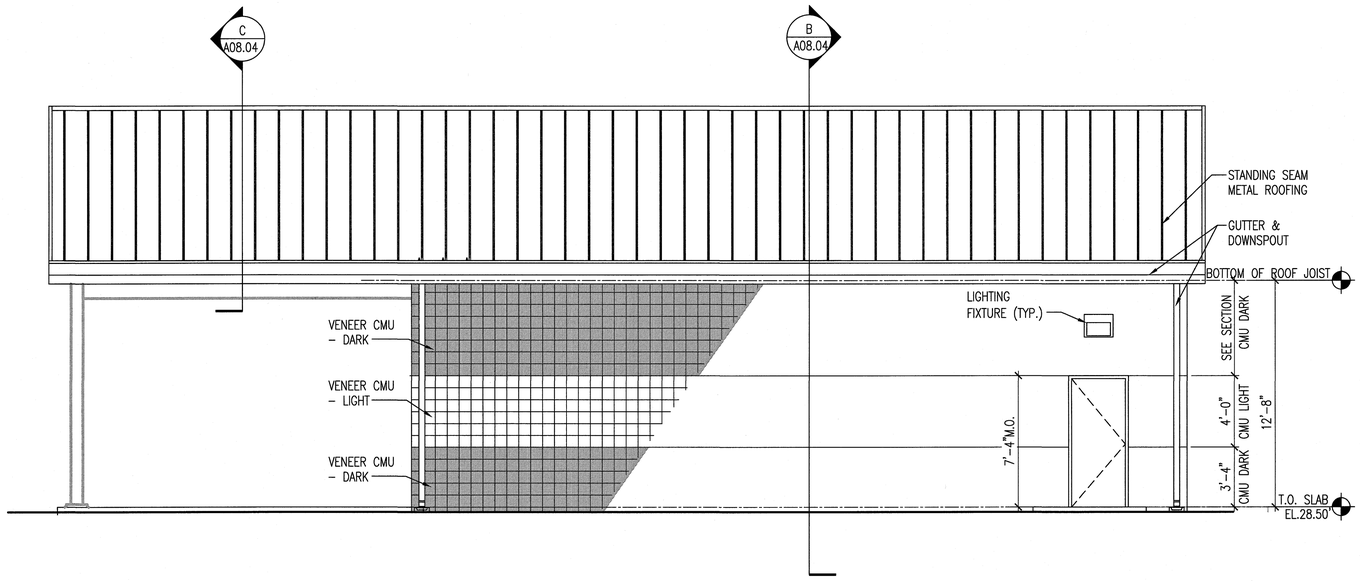

PUMP AND BLOWER BUILDING No 2
EAST ELEVATION

1
A08.03
SCALE: 1/4" = 1'-0"
REF: A08.01

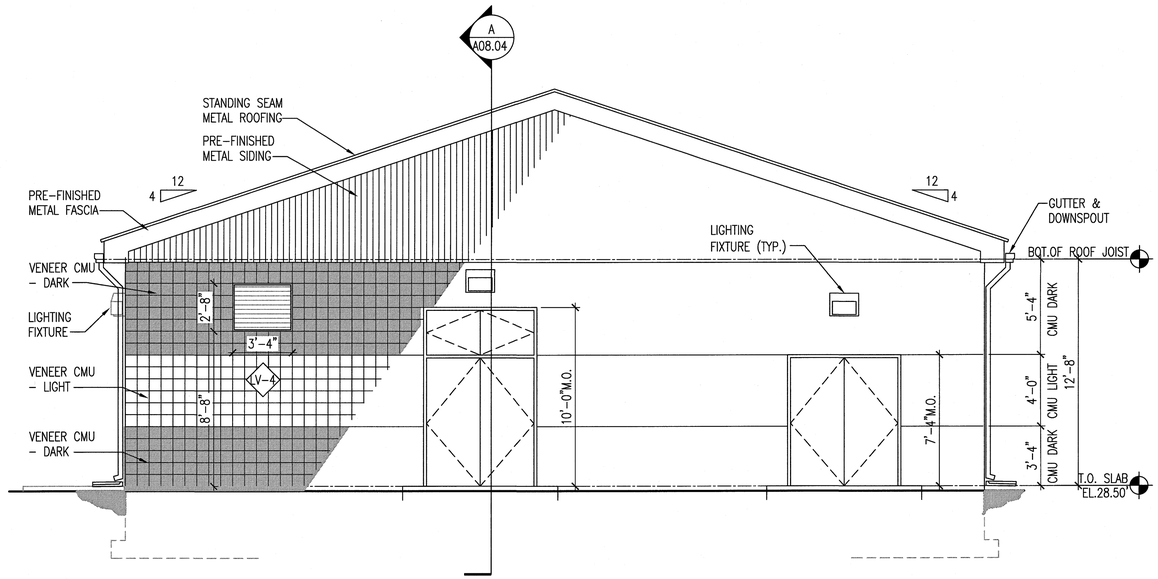

PUMP AND BLOWER BUILDING No 2
NORTH ELEVATION

2
A08.03
SCALE: 1/4" = 1'-0"
REF: A08.01

REVISIONS

CLIENT INFORMATION

SUSSEX COUNTY, DE
ENGINEERING
DEPARTMENT

INLAND BAYS RWF
PHASE #2 EXPANSION:
CONTRACT S19-10

KEY PLAN

GRAPHIC SCALES

0 2' 4' 8'
SCALE: 1/4" = 1'-0"

SIGNATURE

DOUGLAS A. KELBO
NO. S5-0005779
STATE OF DELAWARE
LICENSED ARCHITECT

WRA
Whitman, Requardt & Associates, LLP
801 South Caroline Street, Baltimore, Maryland 21231

PUMP AND BLOWER
BUILDING NO.2 - ELEVATIONS

DRAWING NO.

A08.03

SCALE: AS SHOWN		
DATE: DEC. 2018	SHEET 51 OF 217	
DES: RK	DRAWN: NLE	CHECK: DAK

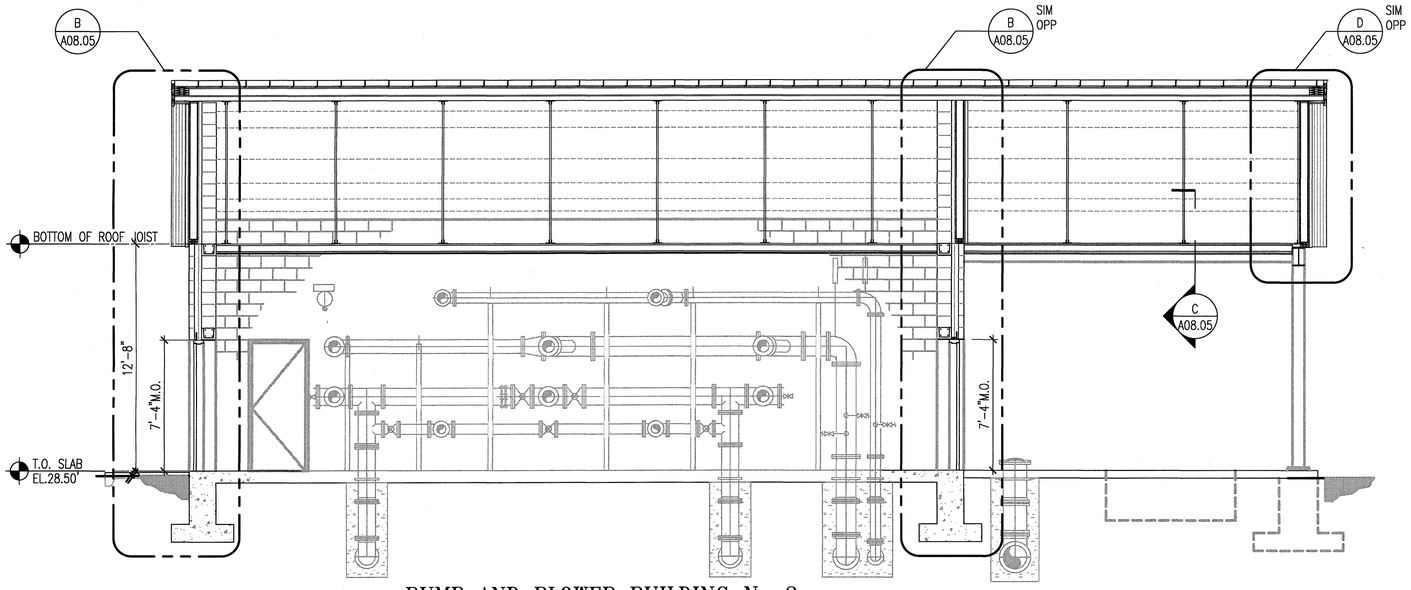

PUMP AND BLOWER BUILDING No 2
LONGITUDINAL SECTION

A / A08.04 SCALE: 1/4" = 1'-0"
REF: A08.01

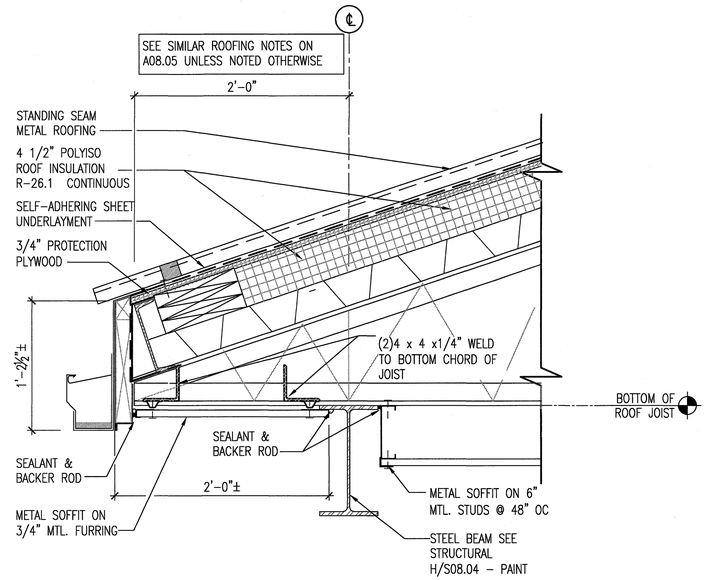

PUMP AND BLOWER BUILDING No 2
ROOF SECTION DETAIL

C / A08.04 SCALE: 1 1/2" = 1'-0"
REF: A08.01, A08.02, A08.03,A08.04

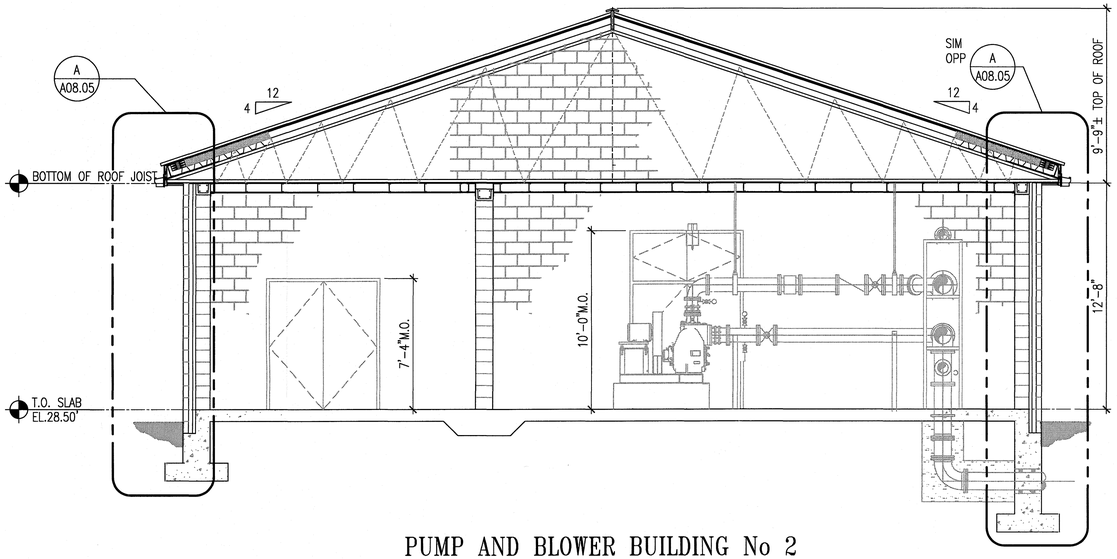

PUMP AND BLOWER BUILDING No 2
CROSS SECTION

B / A08.04 SCALE: 1/4" = 1'-0"
REF: A08.01

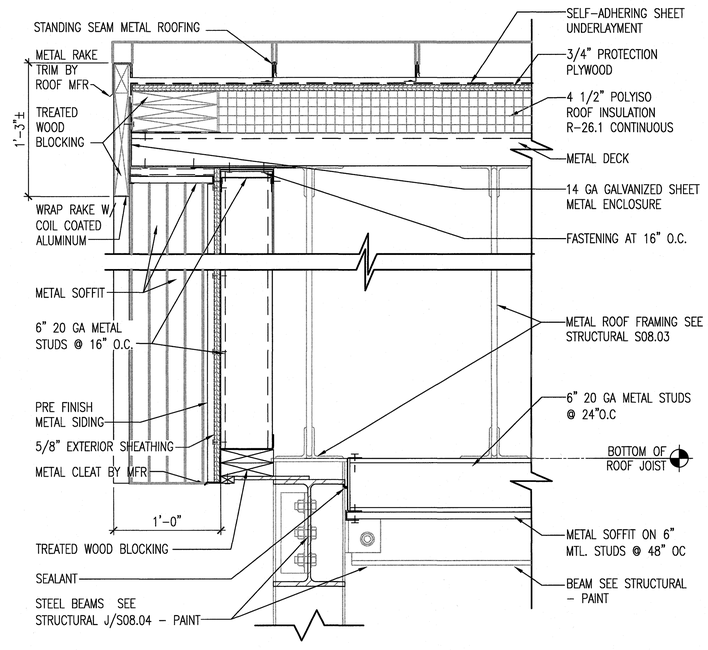

PUMP AND BLOWER BUILDING No 2
ROOF SECTION DETAIL

D / A08.04 SCALE: 1 1/2" = 1'-0"
REF: A08.01, A08.04

FILENAME: N:\14256-108\CADD\14256056A08-04.DWG
N:\14256-108\CADD\14256056A08-04.dwg

REVISIONS

CLIENT INFORMATION

SUSSEX COUNTY, DE
ENGINEERING
DEPARTMENT

INLAND BAYS RWF
PHASE #2 EXPANSION:
CONTRACT S19-10

KEY PLAN

GRAPHIC SCALES

0 2' 4' 8'
SCALE: 1/4" = 1'-0"

SIGNATURE

DOUGLAS A. KELSO
NO. S5-0005779
STATE OF DELAWARE
LICENSED ARCHITECT

WRA
Whitman, Requardt & Associates, LLP
801 South Caroline Street, Baltimore, Maryland 21231

PUMP AND BLOWER BUILDING NO.2 - SECTIONS

DRAWING NO.

A08.04

SCALE: AS SHOWN			
DATE: DEC. 2018		SHEET 52 OF 217	
DES: RK	DRAWN: NLE		CHECK: DAK

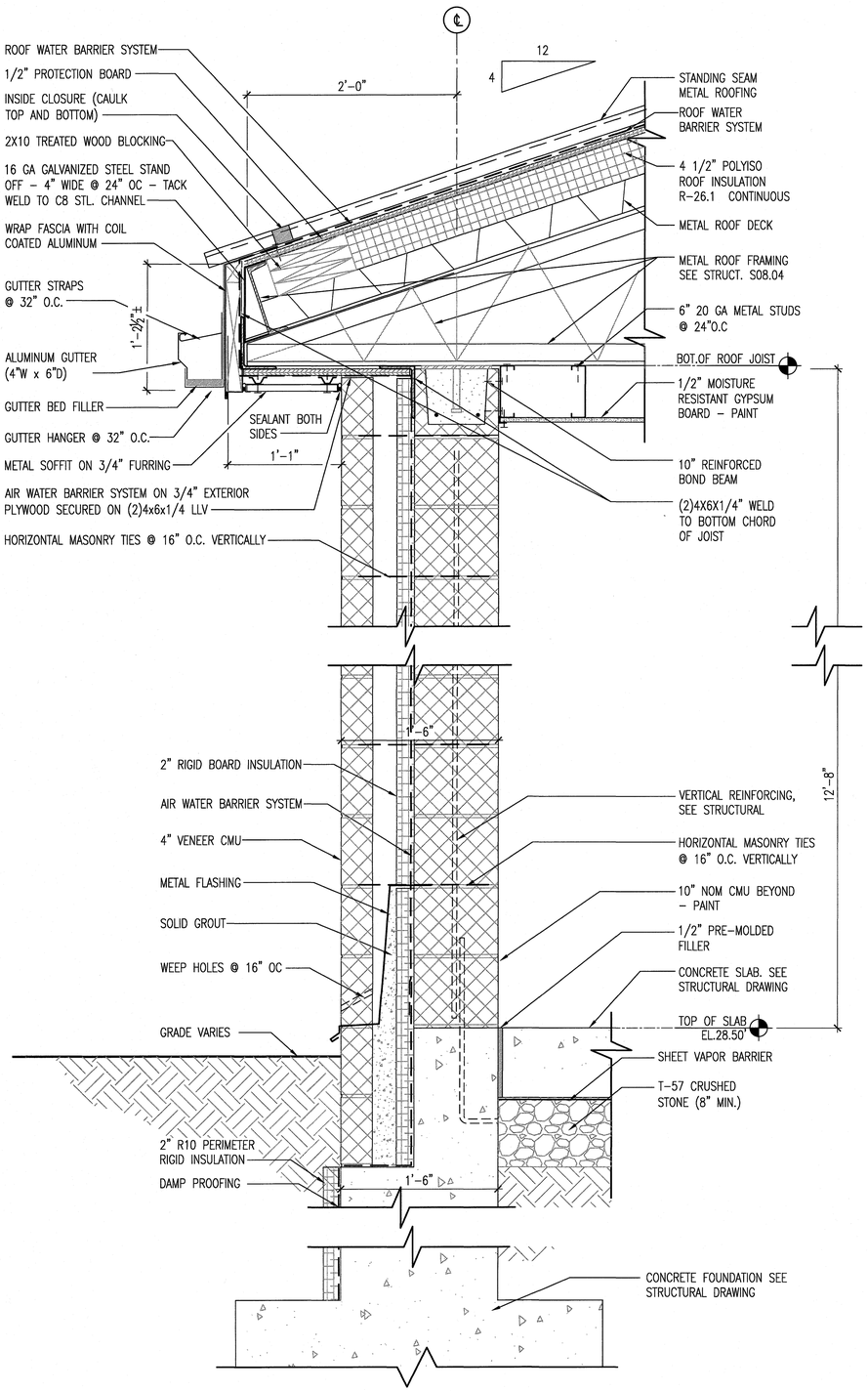

PUMP AND BLOWER BUILDING No 2
WALL SECTION

A / A08.05

SCALE: 1 1/2" = 1'-0"
REF: A08.04

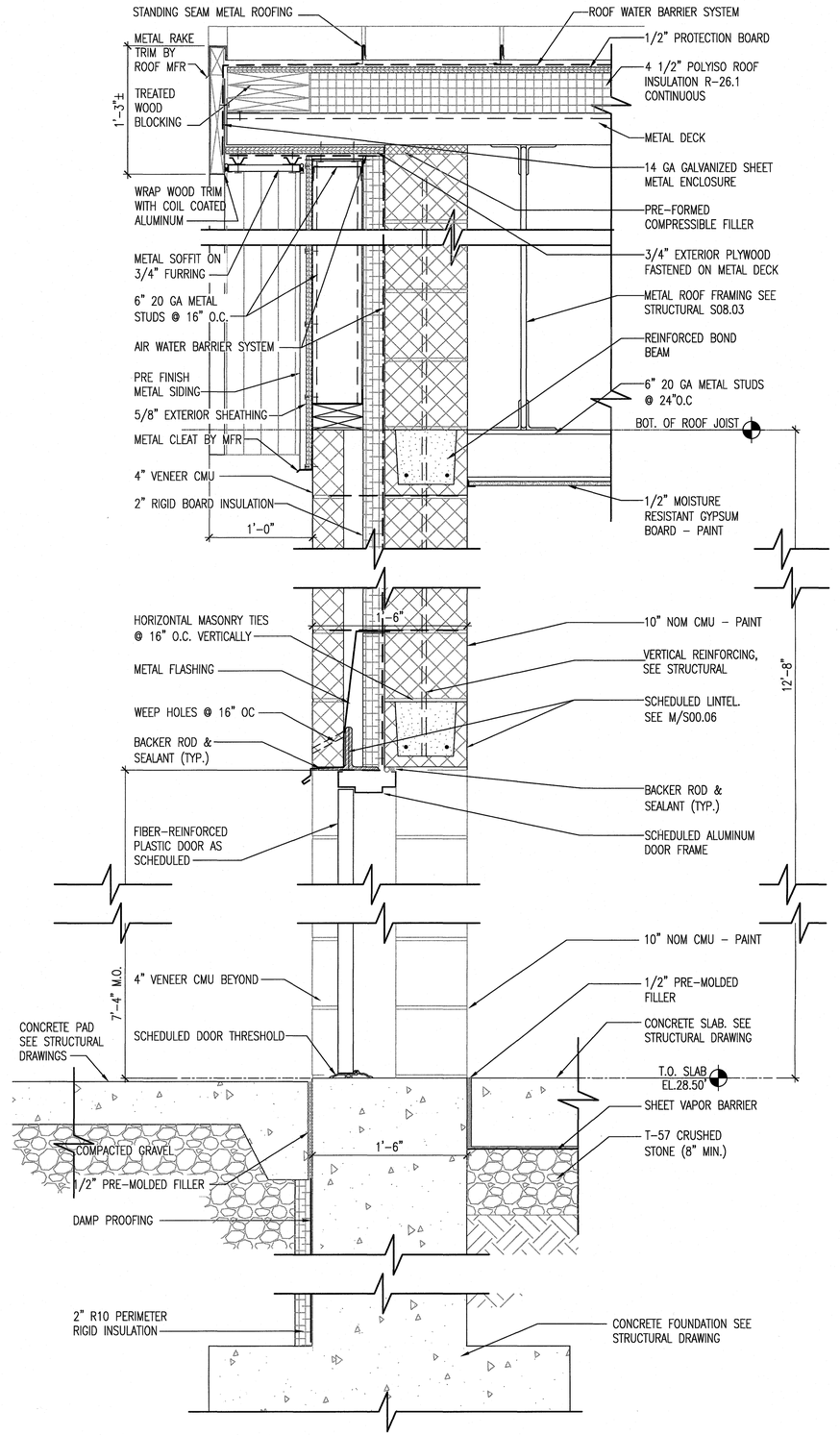

PUMP AND BLOWER BUILDING No 2
WALL SECTION

B / A08.05

SCALE: 1 1/2" = 1'-0"
REF: A08.04

FILENAME: W:\14256-026\CADD\14256026A08-05.DWG
W:\14256-026\CADD\14256026A08-05.dwg

REVISIONS		

CLIENT INFORMATION

SUSSEX COUNTY, DE
ENGINEERING
DEPARTMENT

INLAND BAYS RWF
PHASE #2 EXPANSION:
CONTRACT S19-10

KEY PLAN

GRAPHIC SCALES

0 4" 8" 16"
SCALE: 1 1/2" = 1'-0"

SIGNATURE

DOUGLAS A. KELLO
NO. S6-0006778
STATE OF DELAWARE
LICENSED ARCHITECT

WRA
Whitman, Requardt & Associates, LLP
801 South Caroline Street, Baltimore, Maryland 21231

PUMP AND BLOWER
BUILDING NO.2 - WALL SECTIONS

DRAWING NO.

A08.05

SCALE: AS SHOWN		
DATE: DEC. 2018	SHEET 53 OF 217	
DES: RK	DRAWN: NLE	CHECK: DAK

DOOR SCHEDULE

LOCATION | SAMPLE–SYMBOL

DOOR NO	HARDWARE SET	DOORS				FRAMES					FIRE RATING LABEL	LINTEL	REMARKS	FINISH	
		SIZE	LOCATION	TYPE	MATERIAL	TYPE	MATERIAL	HEAD	JAMB	SILL				DOOR	FRAME
801.1	HW–2	(2)3'–0"x7'–2"	ELECTRICAL ROOM	B	FRB	2	ALUM	H–1	J–1	S–1	–	–	–	–	–
801.2	HW–4	3'–0"x7'–2"	ELECTRICAL ROOM	A	FRB	1	ALUM	H–2	J–2	S–2	–	–	–	–	–
801.3	HW–3	3'–0"x7'–2"	ELECTRICAL ROOM	A	FRB	1	ALUM	H–1	J–1	S–1	–	–	–	–	–
802.1	HW–1	(2)3'–0"x7'–2" (2)3'–0"x2'–6"	PUMP ROOM	C	FRB	3	ALUM	H–1A	J–1	S–1	–	–	–	–	–
802.2	HW–3	3'–0"x7'–2"	PUMP ROOM	A	FRB	1	ALUM	H–1	J–1	S–1	–	–	–	–	–
802.3	HW–3	3'–0"x7'–2"	PUMP ROOM	A	FRB	1	ALUM	H–1	J–1	S–1	–	–	–	–	–

NOTE: SEE DOOR HEAD, JAMB AND SILL DETAILS ON THE SHEET A08–07

FRB: FIBER–REINFORCED PLASTIC
ALUM: ALUMINUM

LOUVER SCHEDULE

SAMPLE–SYMBOL

LOUVER NO	SIZE (L X H)	TYPE	MATERIAL	DEPTH	DETAILS			LINTEL	REMARKS
					HEAD	JAMB	SILL		
LV–1	2'–0"X2'–0"	–	ALUMINUM	6"	LH–1	LJ–1	LS–1	–	WEST ELEVATION
LV–2	2'–0"X2'–0"	–	ALUMINUM	6"	LH–1	LJ–1	LS–1	–	SOUTH ELEVATION
LV–3	2'–8"X2'–8"	–	ALUMINUM	6"	LH–1	LJ–1	LS–1	–	SOUTH ELEVATION
LV–4	3'–4"X2'–8"	–	ALUMINUM	6"	LH–1	LJ–1	LS–1	–	NORTH ELEVATION

NOTE: SEE LOUVER HEAD, JAMB AND SILL DETAILS ON THIS SHEET

ROOM FINISH SCHEDULE

PUMP & BLOWER BLDG No2

LOCATION

ROOM NO	DESCRIPTION	FLOOR	BASE	WALLS				CEILING			REMARKS
				NORTH	EAST	SOUTH	WEST	FINISH	HEIGHT	COLOR	
801	ELECTRICAL ROOM	CONC–S	CMU–P–3	P–2	P–2	P–2	P–2	GYPB–P	12'–1 1/2"	P–1	–
802	PUMP ROOM	CONC–S	CMU–P–3	P–2	P–2	P–2	P–2	GYPB–P	12'–1 1/2"	P–1	–

INTERIOR FINISHES LIST

LOCATION	DESIGNATION	MANUFACTURER	DESCRIPTION
FLOOR	CONC–S	EUCLID CHEMICAL CO.	SURFHARD CHEMICAL HARDENER/DUST PROOF
BASE	CMU–P–3	BENJAMIN MOORE	TBD
WALLS	P–2	BENJAMIN MOORE	TBD
CEILINGS	P–1	BENJAMIN MORE	TBD

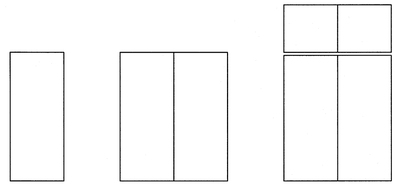

DOOR TYPES:

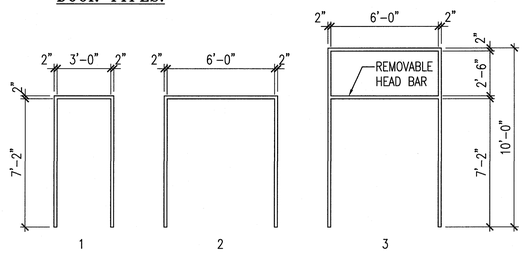

FRAME TYPES:

1 / A08.06 DOOR AND FRAME ELEVATION
SCALE: 1/4" = 1'–0"
REF: A08–06

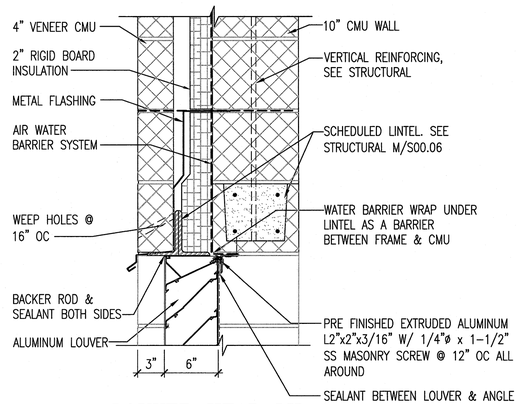

LOUVER HEAD LH–1

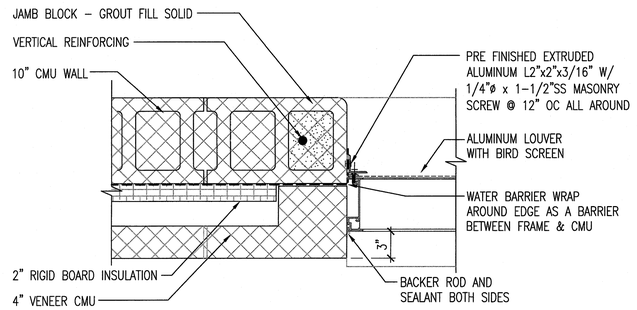

LOUVER JAMB LJ–1

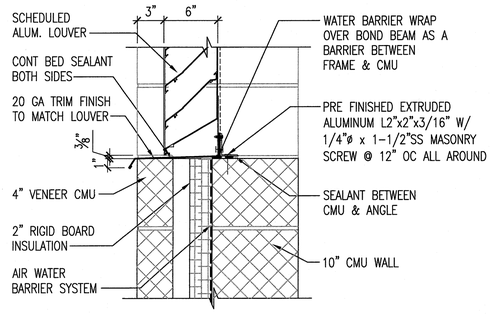

LOUVER SILL LS– 1

2 / A08.06 LOUVER DETAIL
SCALE: 1 1/2" = 1'–0"
REF: A08–06

REVISIONS

CLIENT INFORMATION

SUSSEX COUNTY, DE
ENGINEERING
DEPARTMENT

INLAND BAYS RWF
PHASE #2 EXPANSION:
CONTRACT S19–10

KEY PLAN

GRAPHIC SCALES

0 2' 4' 8'
SCALE: 1/4" = 1'–0"

0 4" 8" 16"
SCALE: 1 1/2" = 1'–0"

SIGNATURE

DOUGLAS A. KEJR
NO. S5-0006779
REGISTERED ARCHITECT

Whitman, Requardt & Associates, LLP
801 South Caroline Street, Baltimore, Maryland 21231

PUMP AND BLOWER
BUILDING NO.2 – SCHEDULES

DRAWING NO.

A08.06

SCALE: AS SHOWN		
DATE: DEC. 2018	SHEET 54 OF 217	
DES: RK	DRAWN: NLE	CHECK: DAK

FILENAME: N:\14256-00A\CADD\142560568A08-06.DWG
N:\14256-00B\CADD\142560568A08-06.dwg

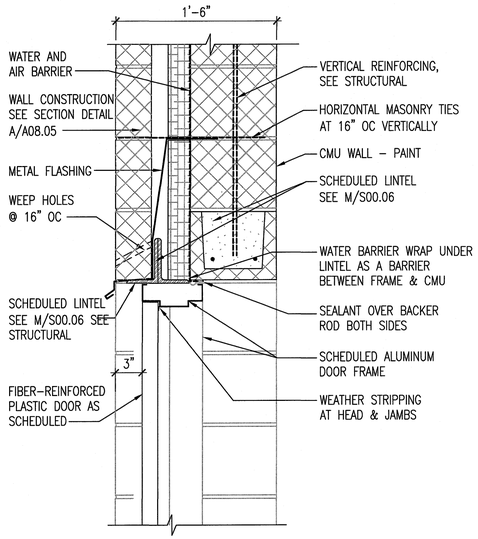

HEAD H-1

SCALE: 1 1/2" = 1'-0"

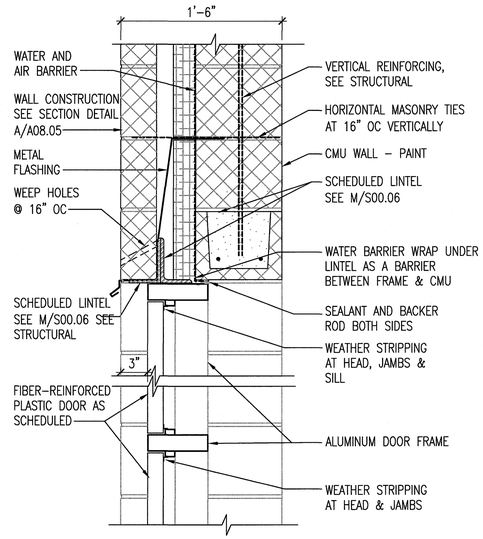

HEAD H-1A

SCALE: 1 1/2" = 1'-0"

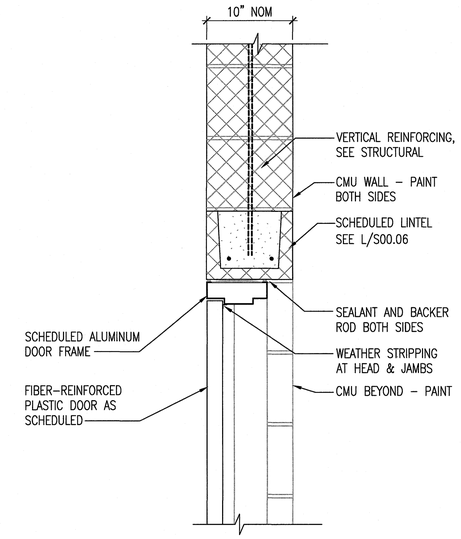

HEAD H-2

SCALE: 1 1/2" = 1'-0"

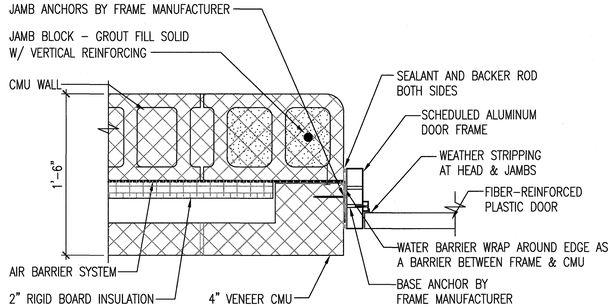

JAMB J-1

SCALE: 1 1/2" = 1'-0"

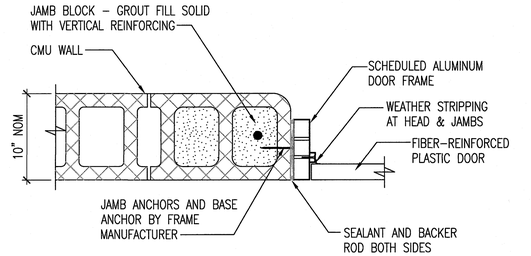

JAMB J-2

SCALE: 1 1/2" = 1'-0"

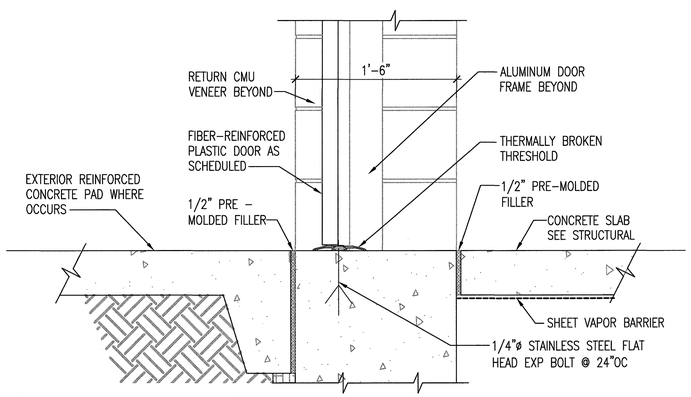

SILL S-1

SCALE: 1 1/2" = 1'-0"

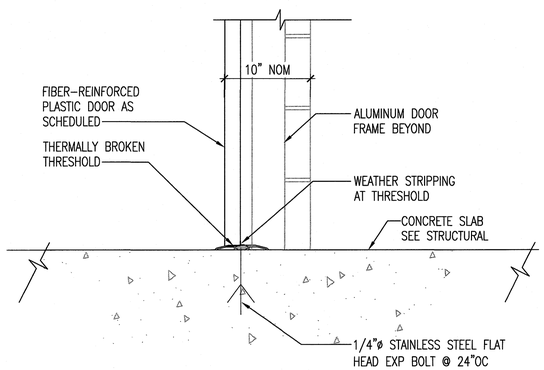

SILL S-2

SCALE: 1 1/2" = 1'-0"

INTERIOR TYPICAL DOOR DETAIL

1 / A08.07

SCALE: 1 1/2" = 1'-0"

REF: A08.06

INTERIOR TYPICAL DOOR DETAIL

2 / A08.07

SCALE: 1 1/2" = 1'-0"

REF: A08.06

REVISIONS

CLIENT INFORMATION

SUSSEX COUNTY, DE
ENGINEERING
DEPARTMENT

INLAND BAYS RWF
PHASE #2 EXPANSION:
CONTRACT S19-10

KEY PLAN

GRAPHIC SCALES

0 4" 8" 16"

SCALE: 1 1/2" = 1'-0"

SIGNATURE

DOUGLAS A. KELSO
NO. S5-0005779
STATE OF DELAWARE
REGISTERED ARCHITECT

Whitman, Requardt & Associates, LLP
801 South Caroline Street, Baltimore, Maryland 21231

PUMP AND BLOWER BUILDING NO.2 - DOOR DETAILS

DRAWING NO.

A08.07

SCALE: AS SHOWN		
DATE: DEC. 2018	SHEET 55 OF 217	
DES: RK	DRAWN: NLE	CHECK: DAK

FILENAME: N:\14256-005\CAD\14256026A08-07.DWG
X:\14256-005\CAD\14256026A08-07.dwg

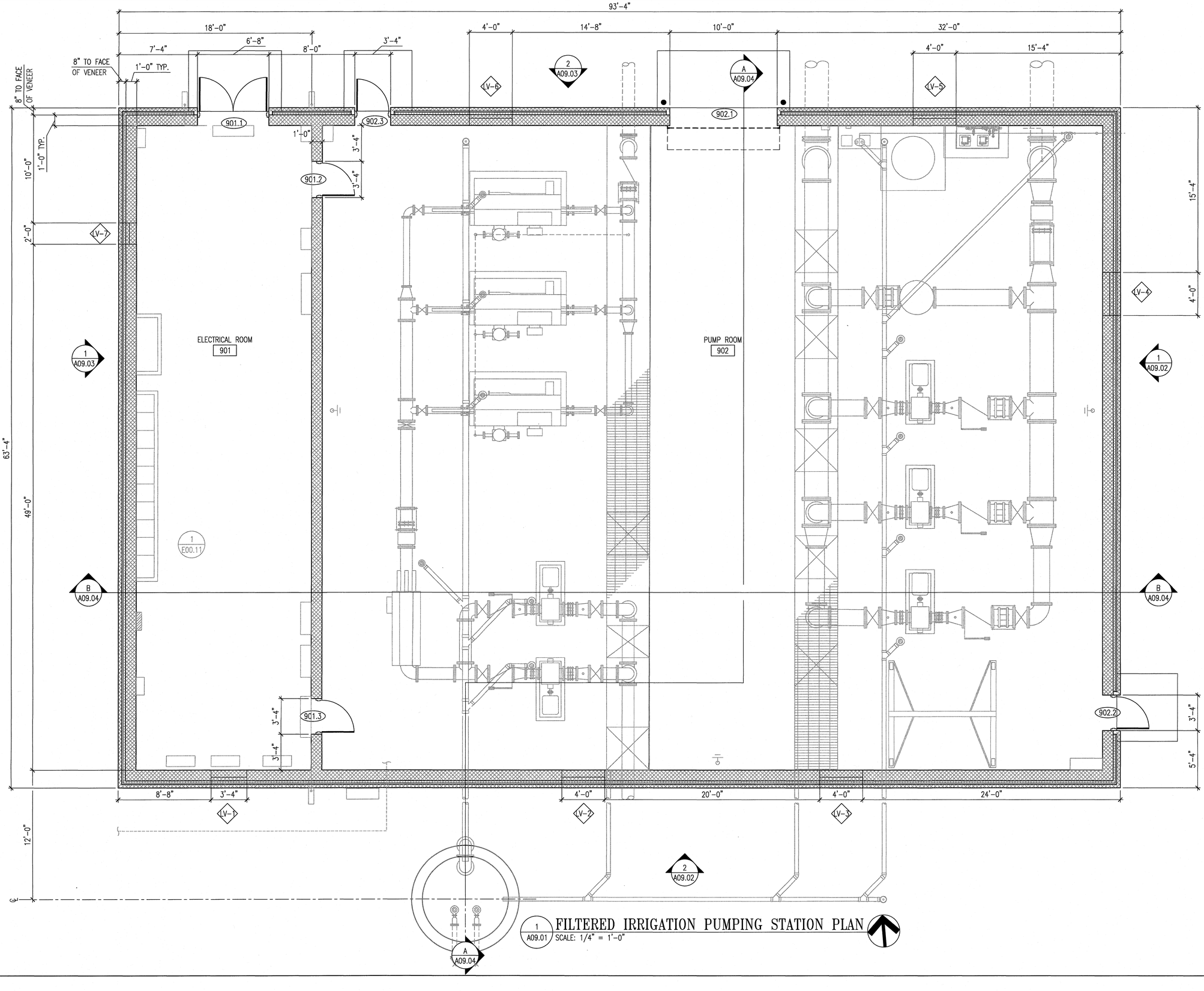

1 A09.01 FILTERED IRRIGATION PUMPING STATION PLAN
SCALE: 1/4" = 1'-0"

REVISIONS

CLIENT INFORMATION

SUSSEX COUNTY, DE
ENGINEERING
DEPARTMENT

INLAND BAYS RWF
PHASE #2 EXPANSION:
CONTRACT S19-10

KEY PLAN

GRAPHIC SCALES

0 2' 4' 8'
SCALE: 1/4" = 1'-0"

SIGNATURE

DOUGLAS A. KELSO
NO. S5-0005779
STATE OF DELAWARE
LICENSED ARCHITECT

WRA
Whitman, Requardt & Associates, LLP
801 South Caroline Street, Baltimore, Maryland 21231

FILTERED IRRIGATION
PUMPING STATION - PLAN

DRAWING NO.

A09.01

SCALE: AS SHOWN		
DATE: DEC. 2018	SHEET 56 OF 217	
DES: RK	DRAWN: NLE	CHECK: DAK

FILENAME: N:\14256-026\CADD\14256026A09-01.DWG
N:\14256-026\CADD\14256026A09-01.dwg

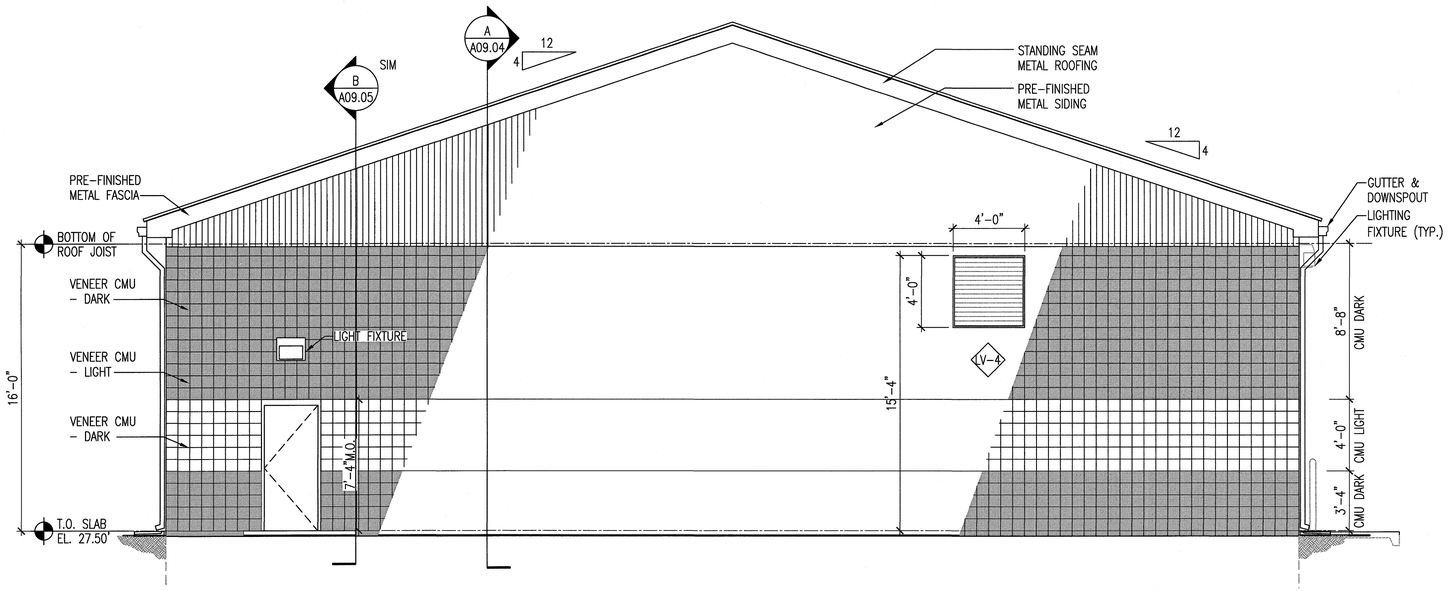

1 A09.02 FILTERED IRRIGATION PUMPING STATION
EAST ELEVATION
SCALE: 1/4" = 1'-0"
REF: A09.01

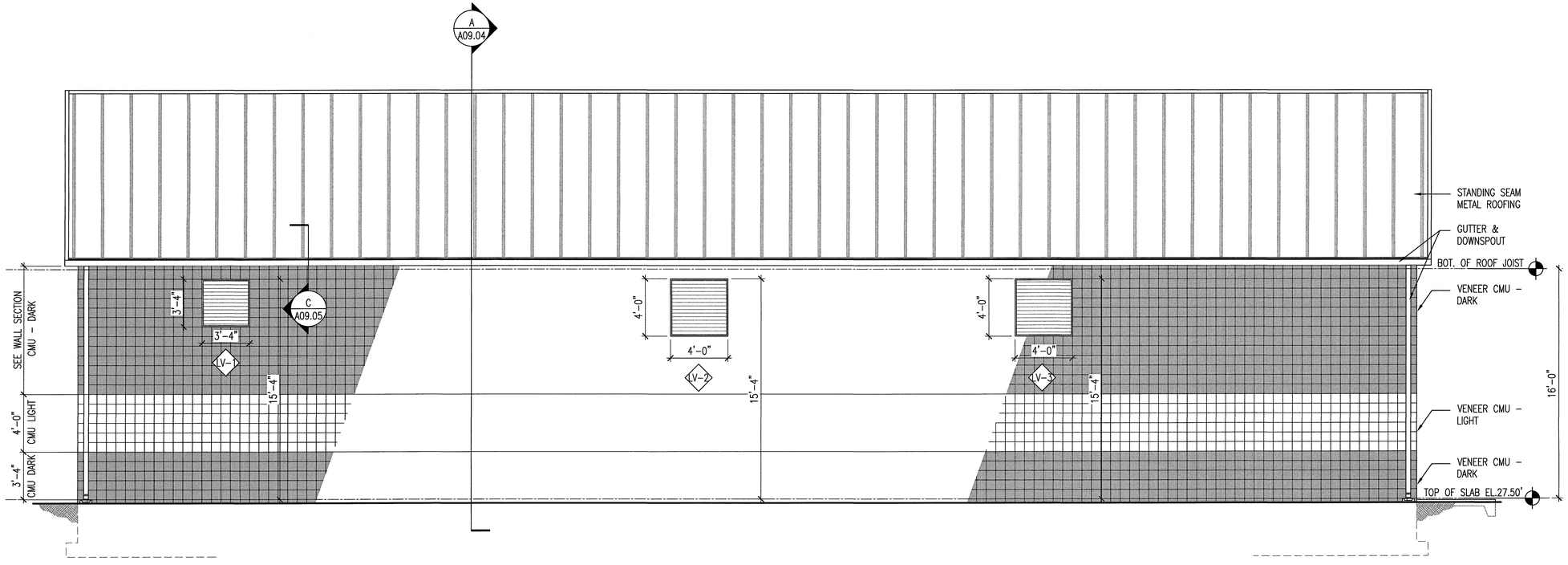

2 A09.02 FILTERED IRRIGATION PUMPING STATION
SOUTH ELEVATION
SCALE: 1/4" = 1'-0"
REF: A09.01

FILENAME N:\14256-026\CADD\1425626A09-02.DWG
N:\14256-026\CADD\1425626DRA09-02.dwg

REVISIONS

CLIENT INFORMATION

SUSSEX COUNTY, DE
ENGINEERING
DEPARTMENT

INLAND BAYS RWF
PHASE #2 EXPANSION:
CONTRACT S19-10

KEY PLAN

GRAPHIC SCALES

0 2' 4' 8'
SCALE: 1/4" = 1'-0"

SIGNATURE

DOUGLAS A. KELSO
NO. S5-0005779
STATE OF DELAWARE
LICENSED ARCHITECT

Whitman, Requardt & Associates, LLP
801 South Caroline Street, Baltimore, Maryland 21231

FILTERED IRRATION PUMPING STATION - ELEVATIONS

DRAWING NO.

A09.02

SCALE: AS SHOWN		
DATE: DEC. 2018	SHEET 57 OF 217	
DES: RK	DRAWN: NLE	CHECK: DAK

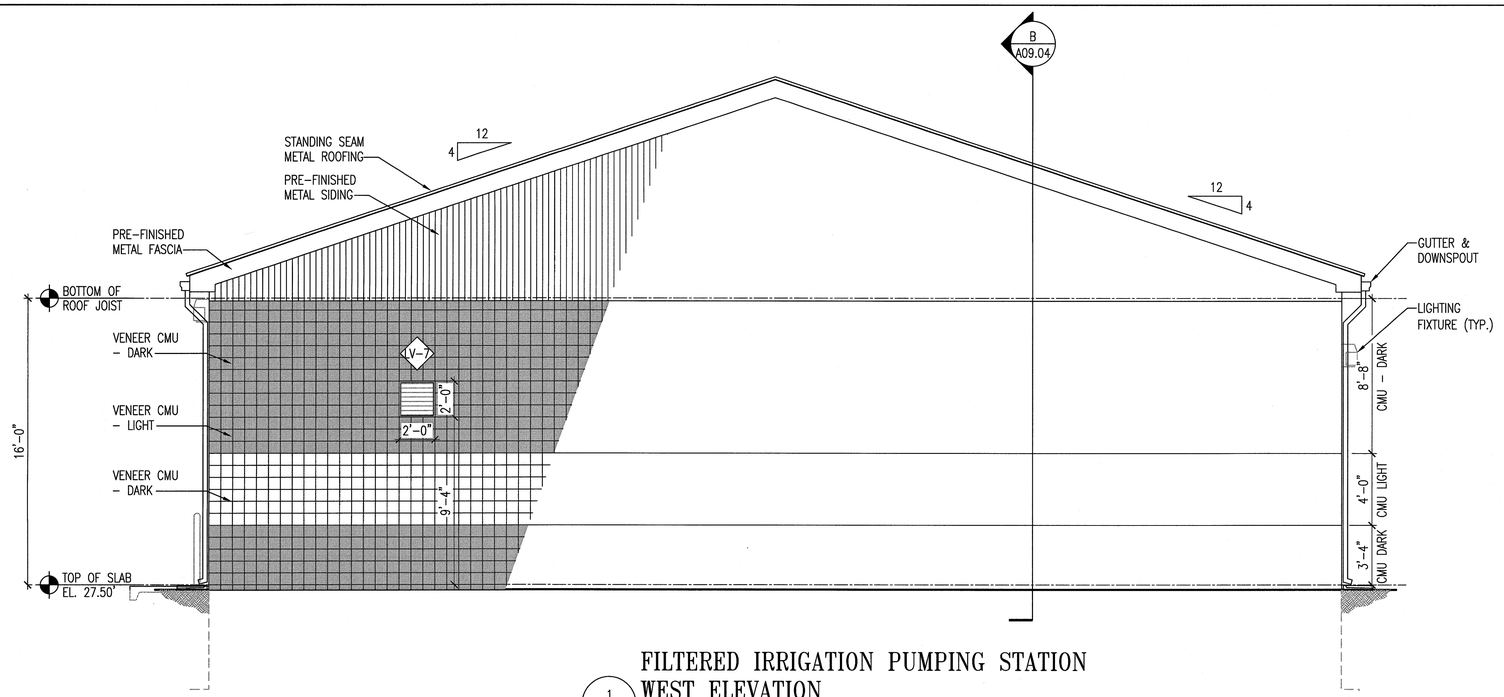

FILTERED IRRIGATION PUMPING STATION
WEST ELEVATION

1 / A09.03 SCALE: 1/4" = 1'-0"
REF: A09.01

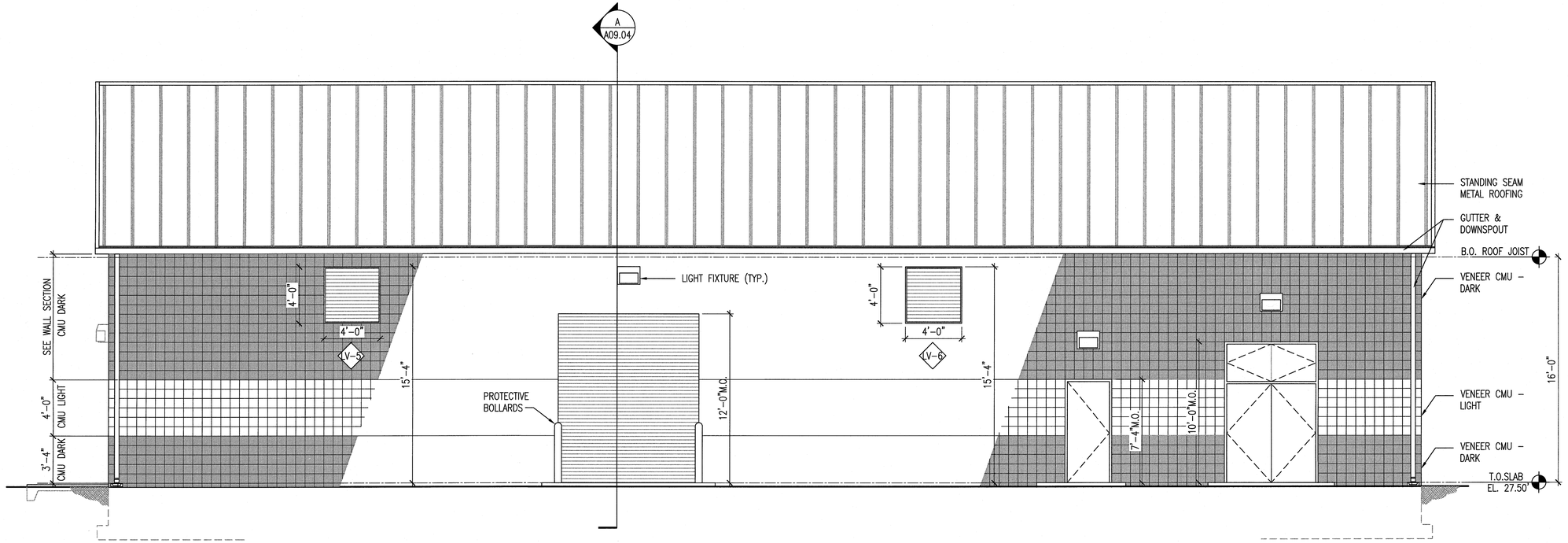

FILTERED IRRIGATION PUMPING STATION
NORTH ELEVATION

2 / A09.03 SCALE: 1/4" = 1'-0"
REF: A09.01

REVISIONS

CLIENT INFORMATION

SUSSEX COUNTY, DE
ENGINEERING
DEPARTMENT

INLAND BAYS RWF
PHASE #2 EXPANSION:
CONTRACT S19-10

KEY PLAN

GRAPHIC SCALES

0 2' 4' 8'
SCALE: 1/4" = 1'-0"

SIGNATURE

DOUGLAS A. KELSO
NO. S5-0005779
STATE OF DELAWARE
LICENSED ARCHITECT

WRA
Whitman, Requardt & Associates, LLP
801 South Caroline Street, Baltimore, Maryland 21231

FILTERED IRRIGATION PUMPING STATION - ELEVATIONS

DRAWING NO.

A09.03

SCALE: AS SHOWN		
DATE: DEC. 2018	SHEET 58 OF 217	
DES: RK	DRAWN: NLE	CHECK: DAK

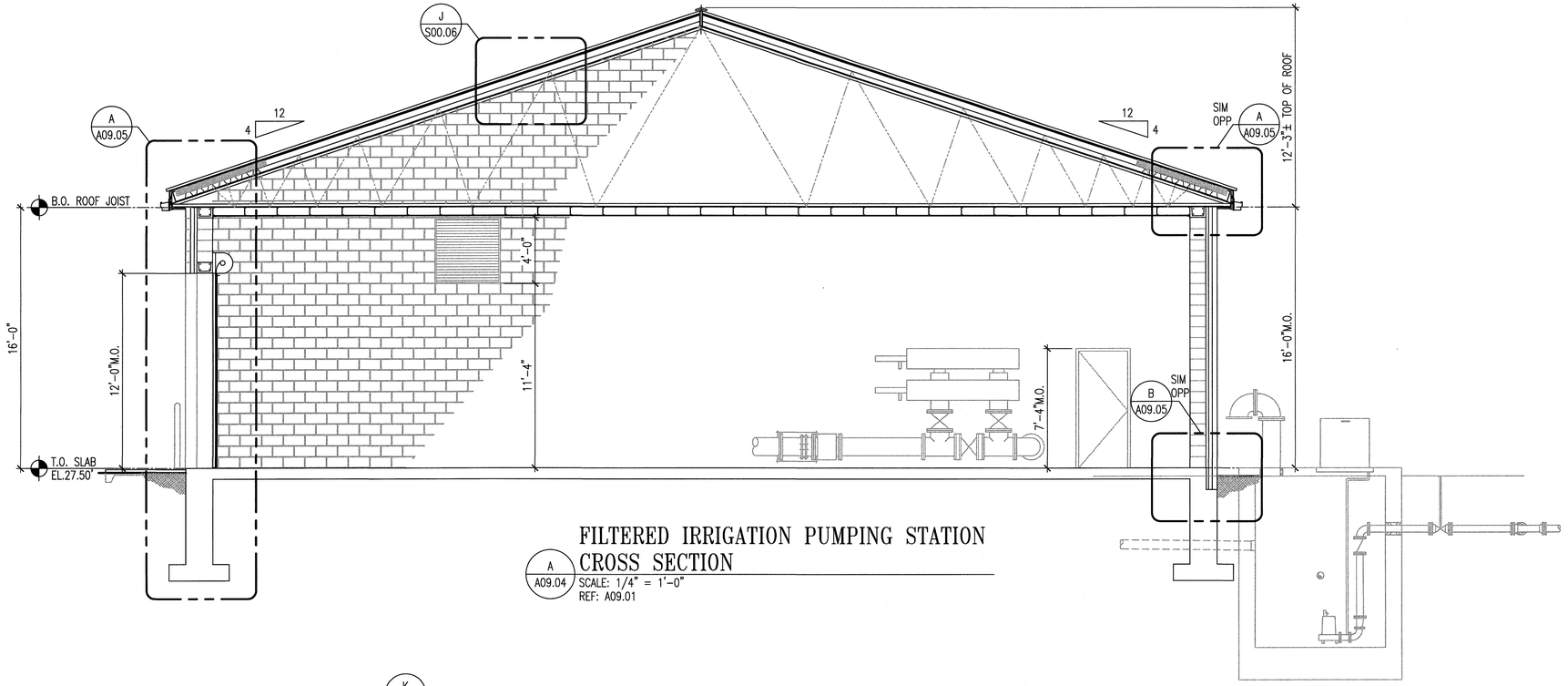

FILTERED IRRIGATION PUMPING STATION
CROSS SECTION
A A09.04 SCALE: 1/4" = 1'-0"
REF: A09.01

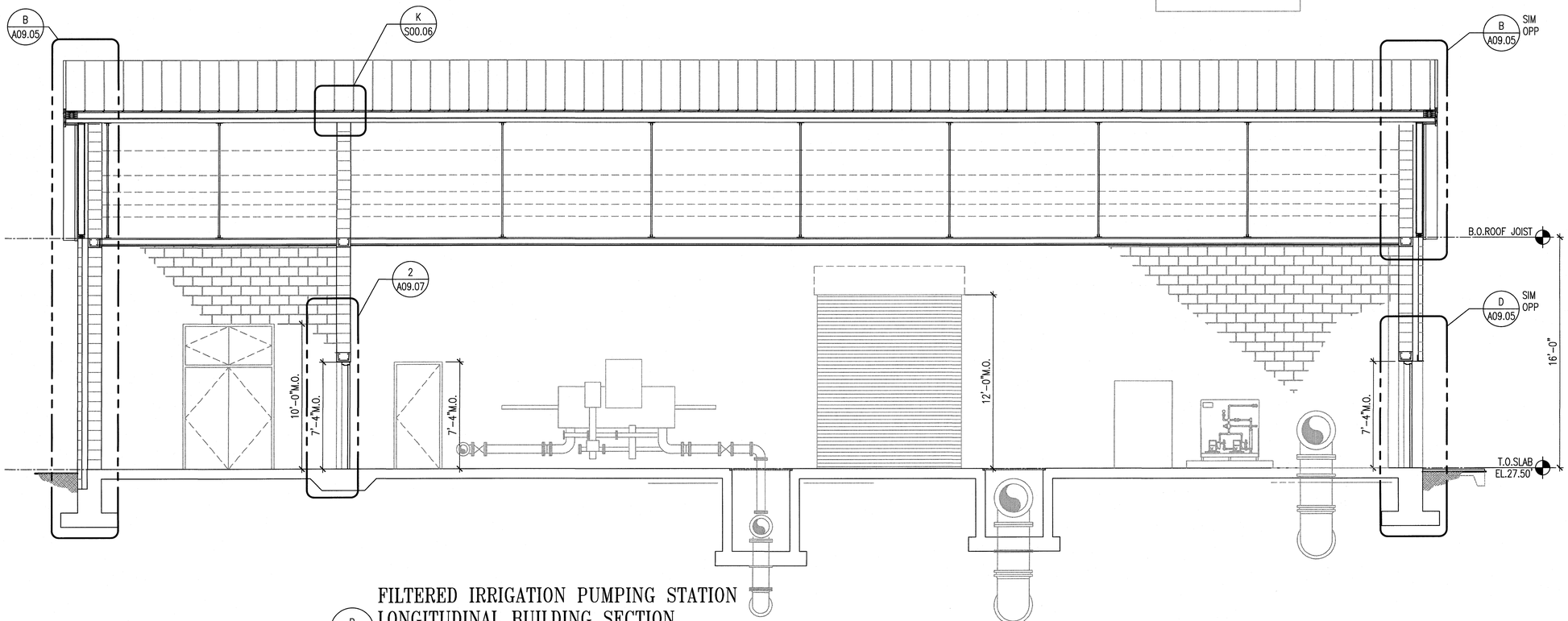

FILTERED IRRIGATION PUMPING STATION
LONGITUDINAL BUILDING SECTION
B A09.04 SCALE: 1/4" = 1'-0"
REF: A09.01

REVISIONS

CLIENT INFORMATION

SUSSEX COUNTY, DE
ENGINEERING
DEPARTMENT

INLAND BAYS RWF
PHASE #2 EXPANSION:
CONTRACT S19-10

KEY PLAN

GRAPHIC SCALES

0 2' 4' 8'
SCALE: 1/4" = 1'-0"

SIGNATURE

DOUGLAS A. KELSO
NO. S5-0005779
STATE OF DELAWARE
LICENSED ARCHITECT

WRA
Whitman, Requardt & Associates, LLP
801 South Caroline Street, Baltimore, Maryland 21231

FILTERED IRRIGATION
PUMPING STATION - SECTIONS

DRAWING NO.

A09.04

SCALE: AS SHOWN		
DATE: DEC. 2018	SHEET 59 OF 217	
DES: RK	DRAWN: NLE	CHECK: DAK

FILENAME: N:\14256-026\CADD\14256026A09-04.DWG
N:\14256-026\CADD\14256026A09-04.dwg

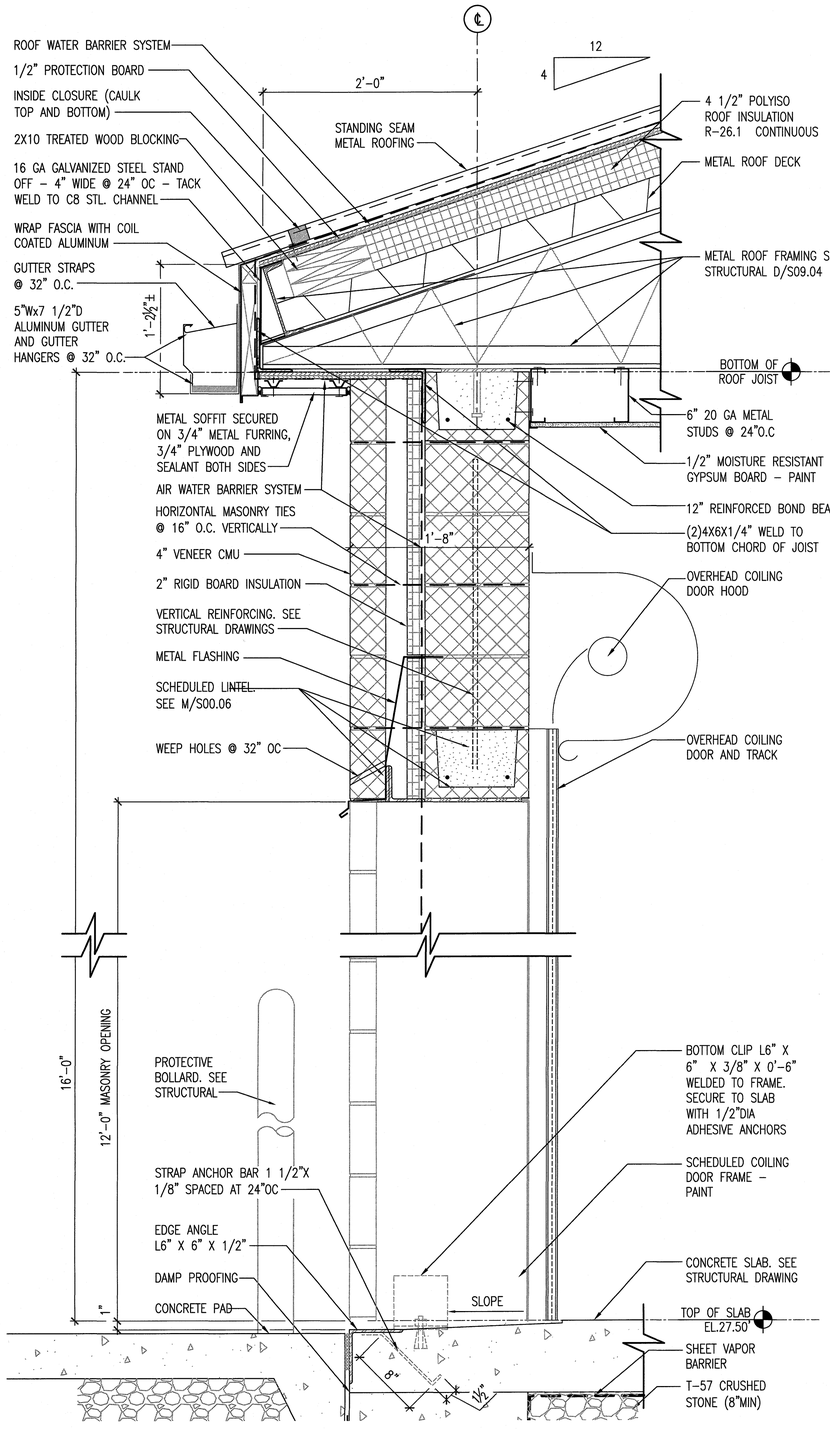

FILTERED IRRIGATION PUMPING STATION WALL SECTION AT PUMP ROOM

A / A09.05 SCALE: 1 1/2" = 1'-0" REF: A09.04

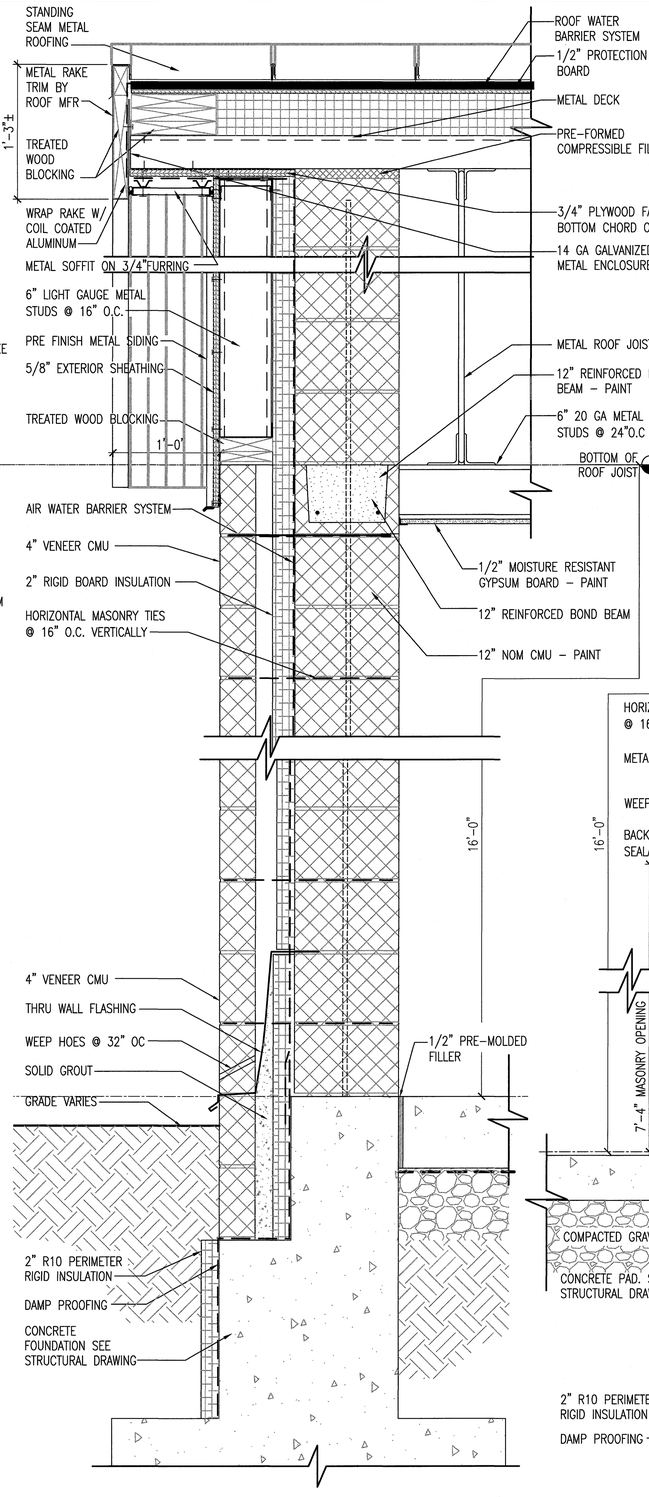

FILTERED IRRIGATION PUMPING STATION WALL SECTION AT ELECTRIC ROOM

B / A09.05 SCALE: 1 1/2" = 1'-0" REF: A09.04

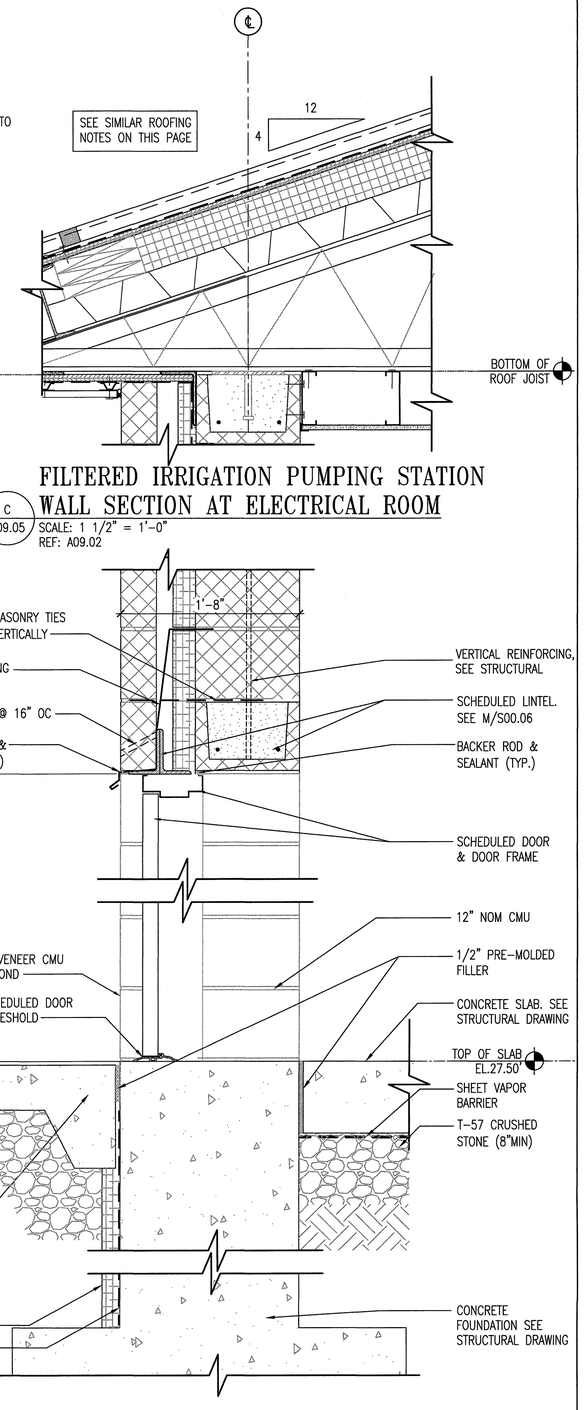

FILTERED IRRIGATION PUMPING STATION WALL SECTION AT EXTERIOR DOOR

D / A09.05 SCALE: 1 1/2" = 1'-0" REF: A09.04

FILENAME N:\14256-026\CADD\14256026A09-05.DWG
X:\14256-026\CADD\14256026A09-05.dwg

REVISIONS

CLIENT INFORMATION

SUSSEX COUNTY, DE
ENGINEERING DEPARTMENT

INLAND BAYS RWF PHASE #2 EXPANSION: CONTRACT S19-10

KEY PLAN

GRAPHIC SCALES

0 4" 8" 16"
SCALE: 1 1/2" = 1'-0"

SIGNATURE

DOUGLAS A. KELSO NO. SS-0005778 STATE OF DELAWARE LICENSED ARCHITECT

WRA
Whitman, Requardt & Associates, LLP
801 South Caroline Street, Baltimore, Maryland 21231

FILTER IRRIGATION PUMP STATIONS - WALL SECTIONS

DRAWING NO.
A09.05

SCALE: AS SHOWN		
DATE: DEC. 2018	SHEET 60 OF 217	
DES: RK	DRAWN: NLE	CHECK: DAK

DOOR SCHEDULE

SAMPLE-SYMBOL

LOCATION	DOOR NO	HARDWARE SET	DOORS SIZE	DOORS LOCATION	DOORS TYPE	DOORS MATERIAL	FRAMES TYPE	FRAMES MATERIAL	FRAMES HEAD	FRAMES JAMB	FRAMES SILL	FIRE RATING LABEL	LINTEL	REMARKS	FINISH DOOR	FINISH FRAME
	901.1	HW-2	(2)3'-0" x 7'-2" (2)3'-0" x 2'-6"	ELECTRICAL ROOM	B	FRP	2	ALUM	H-1A	J-1A	S-1	–	–	–	–	–
	901.2	HW-4	3'-0" x 7'-2"	ELECTRICAL ROOM	A	FRP	1	ALUM	H-2	J-2	S-2	–	–	–	–	–
	901.3	HW-4	3'-0" x 7'-2"	ELECTRICAL ROOM	A	FRP	1	ALUM	H-1	J-1	S-1	–	–	–	–	–
	902.1	–	10'-0" x 12'-0"	PUMP ROOM	D	GALV. STEEL	3	ALUM	H-3	J-3	S-3	–	–	–	–	–
	902.2	HW-3	3'-0" x 7'-2"	PUMP ROOM	A	FRP	1	ALUM	H-1	J-1	S-1	–	–	–	–	–
	902.3	HW-3	3'-0" x 7'-2"	PUMP ROOM	A	FRP	1	ALUM	H-1	J-1	S-1	–	–	–	–	–

NOTE: SEE DOOR HEAD, JAMB AND SILL DETAILS ON THE SHEET A09-07

ROOM FINISH SCHEDULE

PUMP & BLOWER BLDG No2

LOCATION	ROOM NO	DESCRIPTION	FLOOR	BASE	WALLS NORTH	WALLS EAST	WALLS SOUTH	WALLS WEST	CEILING FINISH	CEILING HEIGHT	CEILING COLOR	REMARKS
	901	ELECTRICAL ROOM	CONC-S	CMU-P-3	P-2	P-2	P-2	P-2	GYPB-P	15'-5 1/2"	P-1	–
	902	PUMP ROOM	CONC-S	CMU-P-3	P-2	P-2	P-2	P-2	GYPB-P	15'-5 1/2"	P-1	–

INTERIOR FINISHES LIST

LOCATION	DESIGNATION	MANUFACTURER	DESCRIPTION
FLOOR	CONC-S	EUCLID CHEMICAL CO.	SURFHARD CHEMICAL HARDENER/DUST PROOF
BASE	CMU-P-3	BENJAMIN MOORE	TBD
WALLS	P-2	BENJAMIN MOORE	TBD
CEILINGS	P-1	BENJAMIN MORE	TBD

LOUVER SCHEDULE

SAMPLE-SYMBOL

LOUVER NO	SIZE (L X H)	TYPE	MATERIAL	DEPTH	DETAILS HEAD	DETAILS JAMB	DETAILS SILL	LINTEL	REMARKS
LV-1	3'-4"x3'-4"	–	ALUM	6"	1/A09.06	1/A09.06	1/A09.06	–	–
LV-2	4'-0"x4'-0"	–	ALUM	6"	1/A09.06	1/A09.06	1/A09.06	–	–
LV-3	4'-0"x4'-0"	–	ALUM	6"	1/A09.06	1/A09.06	1/A09.06	–	–
LV-4	4'-0"x4'-0"	–	ALUM	6"	1/A09.06	1/A09.06	1/A09.06	–	–
LV-5	4'-0"x4'-0"	–	ALUM	6"	1/A09.06	1/A09.06	1/A09.06	–	–
LV-6	4'-0"x4'-0"	–	ALUM	6"	1/A09.06	1/A09.06	1/A09.06	–	–
LV-7	2'-0"x2'-0"	–	ALUM	6"	1/A09.06	1/A09.06	1/A09.06	–	–

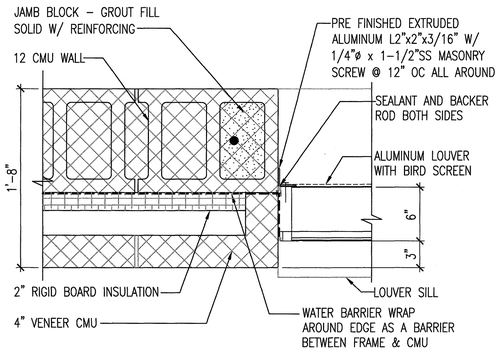

LOUVER JAMB LJ-1

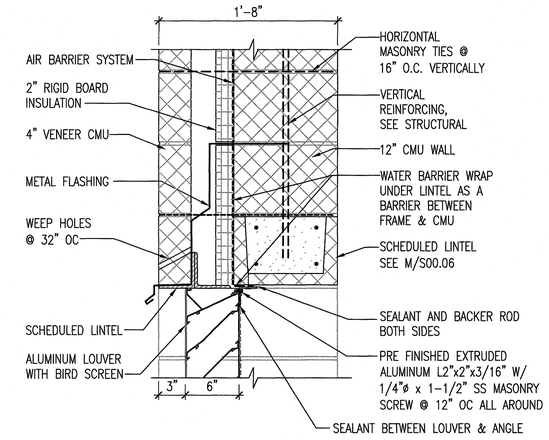

LOUVER HEAD LH-1

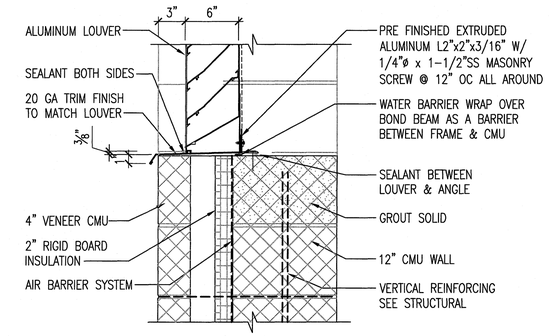

LOUVER SILL LS-1

1 / A09.06 LOUVER DETAIL
SCALE: 1 1/2" = 1'-0"
REF: A09.06

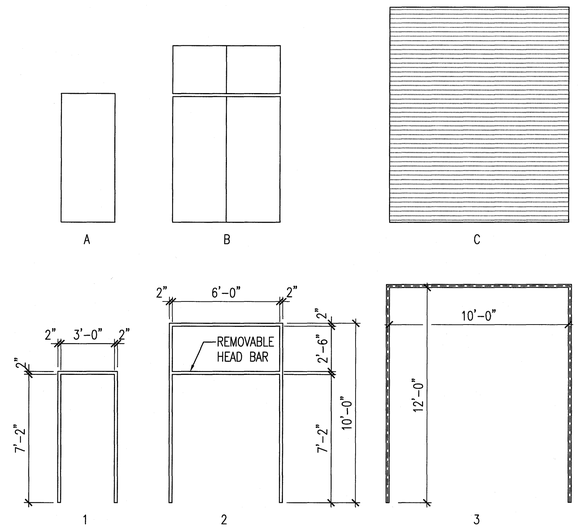

2 / A09.06 DOOR AND FRAME ELEVATION
SCALE: 1/4" = 1'-0"
REF: A09.06

REVISIONS

CLIENT INFORMATION

SUSSEX COUNTY, DE
ENGINEERING
DEPARTMENT

INLAND BAYS RWF
PHASE #2 EXPANSION:
CONTRACT S19-10

KEY PLAN

GRAPHIC SCALES

0 2' 4' 8'
SCALE: 1/4" = 1'-0"

SIGNATURE

DOUGLAS A. KELSO
NO. S5-000579
STATE OF DELAWARE
LICENSED ARCHITECT

Whitman, Requardt & Associates, LLP
801 South Caroline Street, Baltimore, Maryland 21231

FILTER IRRIGATION
PUMP STATION – SCHEDULES

DRAWING NO.

A09.06

SCALE: AS SHOWN		
DATE: DEC. 2018	SHEET 61 OF 217	
DES: RK	DRAWN: NLE	CHECK: DAK

FILENAME: N:\14256-009\CADD\14256009A09-06.DWG
N:\14256-009\CADD\14256009A09-06.dwg

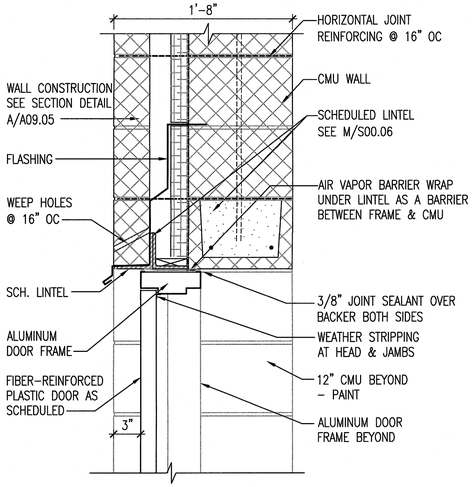

HEAD H-1

SCALE: 1 1/2" = 1'-0"

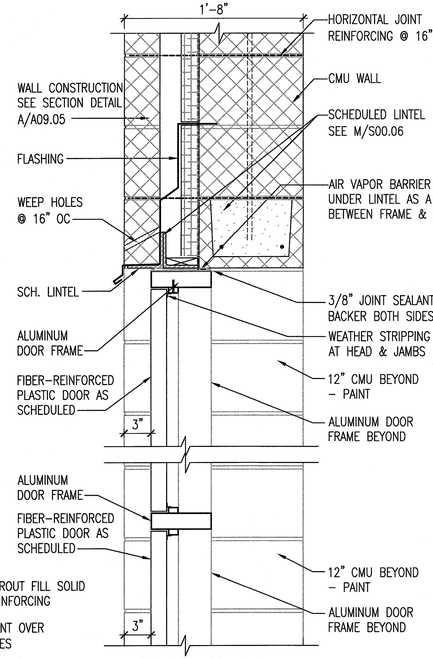

HEAD H-1A

SCALE: 1 1/2" = 1'-0"

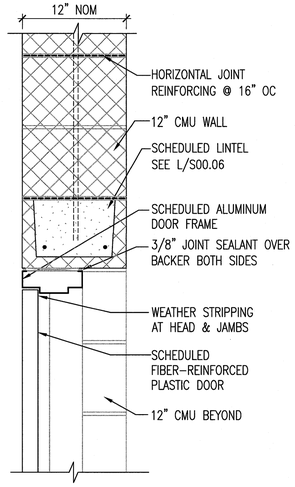

HEAD H-2

SCALE: 1 1/2" = 1'-0"

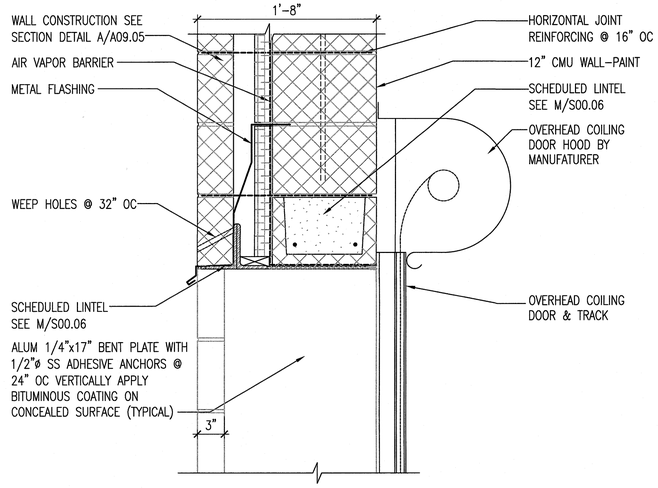

HEAD H-3

SCALE: 1 1/2" = 1'-0"

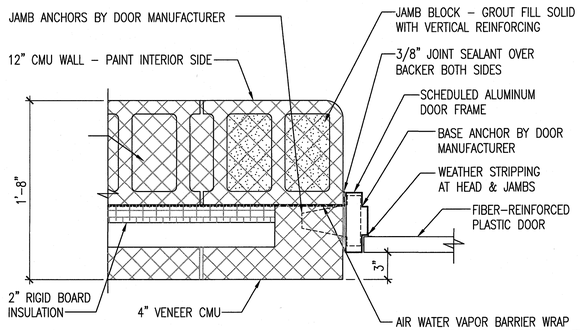

JAMB J-1

SCALE: 1 1/2" = 1'-0"

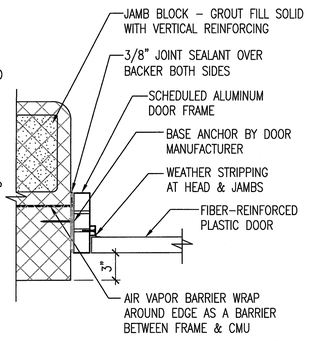

JAMB J-1A

SCALE: 1 1/2" = 1'-0"

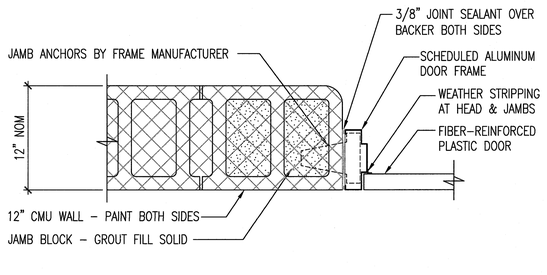

JAMB J-2

SCALE: 1 1/2" = 1'-0"

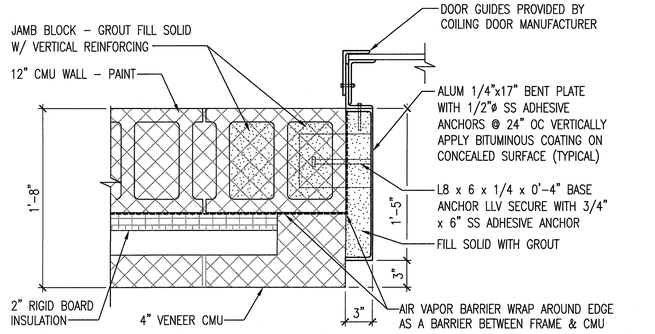

JAMB J-3

SCALE: 1 1/2" = 1'-0"

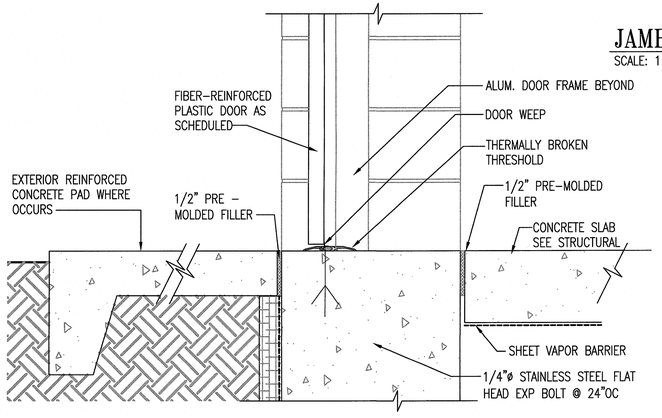

SILL S-1

SCALE: 1 1/2" = 1'-0"

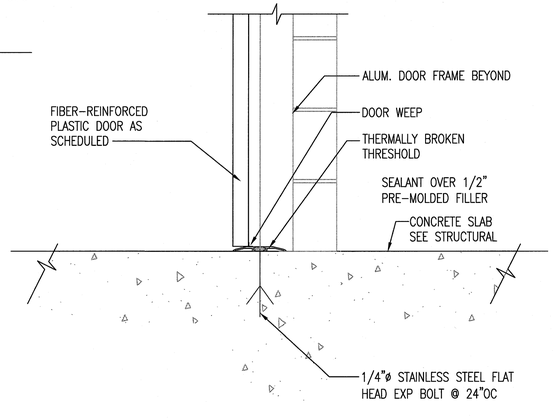

SILL S-2

SCALE: 1 1/2" = 1'-0"

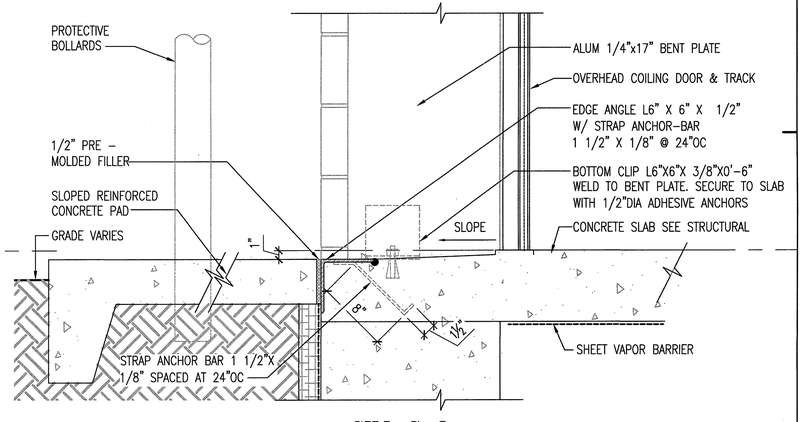

SILL S-3

SCALE: 1 1/2" = 1'-0"

1 A09.07 — EXTERIOR TYPICAL DOOR DETAIL
SCALE: 1 1/2" = 1'-0"
REF: A09.06

2 A09.07 — INTERIOR TYPICAL DOOR DETAIL
SCALE: 1 1/2" = 1'-0"
REF: A09.06

3 A09.07 — EXTERIOR COILING DOOR DETAIL
SCALE: 1 1/2" = 1'-0"
REF: A09.06

REVISIONS

CLIENT INFORMATION

SUSSEX COUNTY, DE
ENGINEERING
DEPARTMENT

INLAND BAYS RWF
PHASE #2 EXPANSION:
CONTRACT S19-10

KEY PLAN

GRAPHIC SCALES

0 4" 8" 16"
SCALE: 1 1/2" = 1'-0"

SIGNATURE

DOUGLAS A. KELSO
NO. S5-0005779
STATE OF DELAWARE
LICENSED ARCHITECT

Whitman, Requardt & Associates, LLP
801 South Caroline Street, Baltimore, Maryland 21231

FILTER IRRIGATION
PUMP STATION - DOOR DETAILS

DRAWING NO.

A09.07

SCALE: AS SHOWN		
DATE: DEC. 2018	SHEET 62 OF 217	
DES: RK	DRAWN: NLE	CHECK: DAK

FILENAME: N:\14256-026\CADD\14256026A09-07.DWG
N:\14256-026\CADD\14256026A09-07.dwg
PLOT DATE: 12/21/2018 3:00:01 PM PLOT SCALE: 1.0000 PLOT STYLE TABLE: WRA_Standard.ctb PLOTTED BY: Nicole Leager

GENERAL STRUCTURAL NOTES

GENERAL:

1. FIELD VERIFY ALL DIMENSIONS, LOCATIONS AND ELEVATIONS SHOWN ON DRAWINGS FOR EXISTING STRUCTURES. BRING ALL DISCREPANCIES TO THE ATTENTION OF THE ENGINEER BEFORE PROCEEDING WITH THE WORK.
2. COORDINATE ALL ACTIVITIES, INCLUDING THOSE OF SUBCONTRACTORS, WITH THE OWNER.
3. NOT ALL OPENINGS IN THE STRUCTURAL WORK ARE SHOWN. REVIEW ALL DRAWINGS FROM OTHER DISCIPLINES AND COORDINATE ALL OPENINGS AND EMBEDDED ITEMS SUCH AS SLEEVES, ANCHORS, CONDUITS, ETC. THAT WILL BE INCORPORATED INTO THE STRUCTURAL WORK.
4. THE SPECIAL INSPECTION PROGRAM AND SPECIAL INSPECTOR WILL BE PROCURED AND FUNDED BY THE OWNER. COORDINATE APPLICABLE ACTIVITIES AND SCHEDULE WITH THE OWNER, CONTRACTING OFFICER, SPECIAL INSPECTOR, AND THE STATEMENT OF SPECIAL INSPECTIONS INCLUDED IN THE SPECIFICATIONS.
5. THE DRAWINGS SHOW THE FINAL CONDITION OF THE STRUCTURES. PROVIDE MEANS TO STABILIZE THE STRUCTURES DURING ALL TEMPORARY CONDITIONS.
6. TEST THE GRIT FACILITY, HEADWORKS, AND AERATION DISTRIBUTION STRUCTURE FOR HYDROSTATIC TIGHTNESS IN ACCORDANCE WITH THE SPECIFICATIONS.
7. THE SIZES AND LOCATIONS OF EQUIPMENT PADS AND PEDESTALS, AS WELL AS EQUIPMENT-RELATED FLOOR AND WALL OPENINGS, ARE DEPENDENT ON THE ACTUAL EQUIPMENT PROVIDED. VERIFY AND COORDINATE ALL SUCH ITEMS. DO NOT ALTER DIMENSIONS ON THESE DRAWINGS WITHOUT APPROVAL OF THE ENGINEER. STRUCTURAL DRAWINGS MAY NOT SHOW ALL EQUIPMENT PADS AND OTHER EQUIPMENT SUPPORTS REQUIRED. REFER TO DRAWINGS BY OTHER DISCIPLINES.
8. EQUIPMENT WEIGHTS INDICATED ON THE DRAWINGS ARE BASED ON BASIS-OF-DESIGN PRODUCTS. NOTIFY THE ENGINEER IF ACTUAL EQUIPMENT WEIGHTS EXCEED THOSE SHOWN.
9. SCALES NOTED ON THE DRAWINGS ARE FOR GENERAL INFORMATION ONLY. DO NOT OBTAIN DIMENSIONAL INFORMATION FROM DIRECT SCALING OF THE DRAWINGS.

FOUNDATIONS AND SLABS-ON-GROUND:

1. DESIGN OF SHALLOW FOUNDATIONS AND SLABS-ON-GROUND IS IN ACCORDANCE WITH THE RECOMMENDATIONS OF THE GEOTECHNICAL REPORT BY WHITMAN, REQUARDT & ASSOCIATES, LLP FROM DECEMBER, 2018.
2. FOUNDATIONS MUST BEAR UPON UNDISTURBED SOIL OR COMPACTED ENGINEERED FILL WITH THE BELOW LISTED MINIMUM ALLOWABLE BEARING CAPACITY. OBTAIN THE SERVICES OF A GEOTECHNICAL ENGINEER LICENSED IN THE STATE OF DELAWARE WHO IS RESPONSIBLE FOR VERIFICATION OF THE SPECIFIED MINIMUM ALLOWABLE BEARING CAPACITY AT EACH FOOTING.
   A. HEADWORKS, GRIT FACILITY: 2000 PSF
   B. AERATION DISTRIBUTION STRUCTURE: 1500 PSF
3. FOUNDATION ELEVATIONS SHOWN ON THE DRAWINGS ARE TO BE CONSIDERED MINIMUM EXCAVATION DEPTHS. EXCAVATE FURTHER AS REQUIRED TO REMOVE ALL UNSATISFACTORY SOILS TO A LAYER WITH THE MINIMUM SPECIFIED ALLOWABLE BEARING CAPACITY. NOTIFY THE ENGINEER OF ANY CONDITIONS THAT REQUIRE CHANGES IN FOUNDATION ELEVATIONS.
4. PLACE FOUNDATIONS ON THE SAME DAY THAT THE BEARING SURFACE IS INSPECTED BY THE CONTRACTOR'S GEOTECHNICAL ENGINEER. ANY BEARING SURFACE WHERE FOUNDATION IS NOT PLACED ON THE SAME DAY OF INITIAL INSPECTION MUST BE RE-INSPECTED BY THE CONTRACTOR'S GEOTECHNICAL ENGINEER ON THE DAY CONCRETE IS PLACED.
5. KEEP ALL EXCAVATIONS DRY.
6. REMOVE ALL UNSATISFACTORY SOILS BELOW SLABS-ON-GROUND TO A COMPETENT SOIL STRATUM AND REPLACE WITH COMPACTED ENGINEERED FILL
7. WHERE REQUIRED, PROVIDE COMPACTED ENGINEERED FILL TO ACHIEVE THE REQUIRED SUBGRADE ELEVATIONS. COMPACTED FILL FOR STRUCTURES SHALL CONSIST OF GRANULAR SOIL MEETING AASHTO SOIL CLASSIFICATION A-2-4 OR BETTER. ALL FILL AND BACKFILL SHALL BE COMPACTED TO AT LEAST 95% OF THE MAXIMUM DRY DENSITY AS DETERMINED BY THE MODIFIED PROCTOR, AASHTO T-180.
8. MINIMUM DEPTH BELOW GRADE FOR BOTTOM OF FOUNDATIONS FOR FROST PROTECTION IS 24 INCHES.
9. PROVIDE A 6" LAYER OF OPEN-GRADED COARSE AGGREGATE AND A 10-MIL VAPOR RETARDER BENEATH ALL INTERIOR SLABS-ON-GROUND. SUBGRADE FOR SLABS-ON-GROUND MUST BE INSPECTED AND APPROVED BY THE CONTRACTOR'S GEOTECHNICAL ENGINEER BEFORE PLACING ANY CONCRETE OR OPEN-GRADED COARSE AGGREGATE.
10. PROVIDE A 12" LAYER OF OPEN-GRADED COARSE AGGREGATE AND BLINDSIDE WATERPROOFING BENEATH ALL CONCRETE MAT SLABS.
11. DO NOT PLACE BACKFILL AGAINST SUBSTRUCTURE WALLS, NOR PERFORM HYDROSTATIC TIGHTNESS TESTING, UNTIL UPPER BRACING FLOORS ARE IN PLACE FOR A MINIMUM OF SEVEN DAYS, OR UNTIL BRACING FLOOR CONCRETE ACHIEVES 70% OF SPECIFIED 28-DAY COMPRESSIVE STRENGTH USING FIELD-CURED CYLINDERS.
12. REFER TO OTHER DISCIPLINES' DRAWINGS FOR WORK TO BE INCORPORATED IN OR COORDINATED WITH FOUNDATION AND SLAB-ON-GROUND WORK.
13. PROVIDE SUPPORT FOR ALL EXCAVATIONS REQUIRED TO COMPLETE THE WORK SHOWN ON THE DRAWINGS. SUPPORT OF EXCAVATION SYSTEMS MUST BE DESIGNED BY THE CONTRACTOR'S PROFESSIONAL ENGINEER.

CONCRETE:

1. PROVIDE NORMAL-WEIGHT CONCRETE WITH A MINIMUM COMPRESSIVE STRENGTH AT 28 DAYS AS FOLLOWS, UNLESS NOTED OTHERWISE:
   A. AERATION DISTRIBUTION, GRIT FACILITY, NORTH HEADWORKS AND CLARIFIER DISTRIBUTION BOX CONCRETE, NOT INDICATED AS CONCRETE FILL : 5000 PSI
   B. ALL OTHER SLABS-ON-GROUND, FOOTINGS, FOUNDATION WALLS, GRADE BEAMS AND EQUIPMENT PADS: 4500 PSI
   C. CONCRETE FILL, PIPE ENCASEMENT, AND DUCTBANKS: 3000 PSI

CONCRETE (CONTINUED):

2. PROVIDE CRYSTALLINE WATERPROOFING ADMIXTURE IN ALL CONCRETE (EXCEPT THAT INDICATED AS FILL) FOR THE GRIT FACILITY, HEADWORKS, AERATION DISTRIBUTION STRUCTURE, AND CLARIFIER DISTRIBUTION STRUCTURE.
3. DETAIL AND CONSTRUCT REINFORCED CONCRETE IN ACCORDANCE WITH AMERICAN CONCRETE INSTITUTE ACI 301, "SPECIFICATION FOR STRUCTURAL CONCRETE", AND AS SPECIFIED HEREIN.
4. DETAIL REINFORCING STEEL IN ACCORDANCE WITH AMERICAN CONCRETE INSTITUTE ACI 315, "MANUAL OF STANDARD PRACTICE FOR DETAILING REINFORCED CONCRETE STRUCTURES" AND ACI SP-66, "ACI DETAILING MANUAL."
5. PROVIDE REINFORCING STEEL CONFORMING TO ASTM A615, GRADE 60, DEFORMED BARS. REINFORCING STEEL REQUIRING WELDABILITY MUST CONFORM TO ASTM A706, GRADE 60, DEFORMED BARS.
6. PROVIDE WELDED WIRE REINFORCEMENT CONFORMING TO ASTM A1064. LAP ENDS ONE FULL MESH.
7. UNLESS NOTED OTHERWISE ON THE DRAWINGS, PROVIDE CONCRETE COVER FOR REINFORCEMENT AS FOLLOWS:
   A. CONCRETE CAST AGAINST AND PERMANENTLY EXPOSED TO EARTH, FILL, OPEN-GRADED COARSE AGGREGATE, OR BLINDSIDE WATERPROOFING: 3"
   B. CONCRETE EXPOSED TO WEATHER OR IN CONTACT WITH: PROCESS LIQUID OR VAPORS; EARTH; FILL; OR SHEET MEMBRANE WATERPROOFING: 2"
   C. CONCRETE NOT EXPOSED TO WEATHER OR IN CONTACT WITH: PROCESS LIQUID OR VAPORS; EARTH; FILL; OR SHEET MEMBRANE WATERPROOFING: 1-1/2"
8. SUBMIT REINFORCING STEEL DETAILS AND JOINT LAYOUT (SHOP DRAWINGS) AND RECEIVE APPROVAL FROM THE ENGINEER BEFORE PROCEEDING WITH FABRICATION.
9. CHAMFER ALL EXPOSED CONCRETE EDGES 3/4" UNLESS NOTED OTHERWISE.
10. DETAIL ALL SPLICES AND STANDARD HOOKS FOR REINFORCING BARS NOT DIMENSIONED ON THE DRAWINGS AS TABULATED ON DRAWING S00.02 AND S00.03.
11. PLACE CONCRETE SLABS AND WALLS BETWEEN INDICATED AND APPROVED JOINTS. ALLOW A MINIMUM ELAPSED PERIOD OF 48 HOURS BETWEEN ADJACENT PLACEMENTS FOR THE GRIT FACILITY, HEADWORKS, AERATION DISTRIBUTION STRUCTURE, AND CLARIFIER DISTRIBUTION STRUCTURE.
12. PROVIDE JOINTS ONLY AS DETAILED ON THE DRAWINGS AND ON APPROVED SHOP DRAWINGS. NO ADDITIONAL JOINTS SHALL BE USED NOR ANY OMITTED EXCEPT BY WRITTEN AUTHORIZATION FROM THE ENGINEER. APPROVED ADDITIONAL JOINTS MUST NOT RESULT IN ADDITIONAL EXPENSE TO THE OWNER.
13. CONTROL JOINTS SHOWN ON PLANS INDICATE REQUIRED LOCATIONS OF CRACK CONTROL IN THE SLAB-ON-GROUND. A CONTROL JOINT MAY BE EITHER A CONSTRUCTION JOINT OR CONTRACTION JOINT PER THE TYPICAL DETAILS.
14. LOCATE CONSTRUCTION JOINTS IN BEAMS AND ELEVATED SLABS WITHIN THE MIDDLE ONE-THIRD OF THE SPAN, SUBJECT TO APPROVAL BY THE ENGINEER.
15. PROVIDE CONSTRUCTION JOINT INTERFACE CLEAN AND FREE OF LAITANCE. WHERE INDICATED ON THE DRAWINGS, INTENTIONALLY ROUGHEN CONSTRUCTION JOINTS TO A FULL AMPLITUDE OF 1/4 INCH. IMMEDIATELY BEFORE NEW CONCRETE IS PLACED, CONSTRUCTION JOINTS MUST BE PREWETTED AND STANDING WATER REMOVED.
16. PROVIDE 6" PVC BULB-TYPE WATERSTOPS AT ALL CONSTRUCTION JOINTS IN THE GRIT FACILITY, HEADWORKS, AERATION DISTRIBUTION STRUCTURE, AND CLARIFIER DISTRIBUTION STRUCTURE. PLACE WATERSTOP IN MIDDLE THIRD OF WALLS AND MAT SLABS.
17. WHERE A BEAM FRAMES INTO A WALL, IF A CONSTRUCTION JOINT IS NOT INDICATED AT THE BOTTOM OF THE BEAM, PROVIDE A POCKET IN THE WALL FOR BEAM BEARING. DEPTH OF THE POCKET MUST BE THE FULL THICKNESS OF THE WALL.
18. WHERE A SLAB IS SLOPED (TOP AND/OR BOTTOM), PROVIDE SLOPED REINFORCING STEEL PARALLEL TO THE CONCRETE SURFACE.
19. OPENINGS SHOWN ON THE STRUCTURAL DRAWINGS ARE PRINCIPAL OPENINGS. REVIEW ALL DRAWINGS FROM OTHER DISCIPLINES AND COORDINATE ALL OPENINGS AND EMBEDDED ITEMS SUCH AS SLEEVES, ANCHORS, CONDUIT, ETC THAT WILL BE INCORPORATED INTO THE CONCRETE WORK.
20. PROVIDE BLINDSIDE AND SELF-ADHERING SHEET WATERPROOFING AT THE GRIT FACILITY, HEADWORKS, AERATION DISTRIBUTION STRUCTURE, AND CLARIFIER DISTRIBUTION STRUCTURE.
21. SIZE AND LOCATE ANCHOR BOLTS AND EQUIPMENT PADS OR PEDESTALS TO SUIT EQUIPMENT FURNISHED.
22. COLD WEATHER PLACEMENT OF CONCRETE MUST BE IN ACCORDANCE WITH ACI 306R, ACI 306.1, AND THE SPECIFICATIONS.
23. HOT WEATHER PLACEMENT OF CONCRETE MUST BE IN ACCORDANCE WITH ACI 305R, ACI 305.1, AND THE SPECIFICATIONS.
24. PROVIDE HILTI HIT-HY 200 ADHESIVE, OR APPROVED EQUAL, FOR ADHESIVE DOWELS IN CONCRETE.

CONCRETE MASONRY:

1. CONSTRUCT MASONRY IN ACCORDANCE WITH AMERICAN CONCRETE INSTITUTE ACI-530/ ASCE 5/ TMS 402, (2013) "BUILDING CODE REQUIREMENTS FOR MASONRY STRUCTURES" AND ACI 530.1/ ASCE 6/ TMS 602 (2013) "SPECIFICATION FOR MASONRY STRUCTURES."
2. PROVIDE HOLLOW LIGHTWEIGHT LOAD-BEARING CONCRETE MASONRY UNITS MEETING THE REQUIREMENTS OF ASTM C90.
3. PROVIDE MORTAR CONFORMING TO THE PROPERTY REQUIREMENTS OF ASTM C270, TYPE M OR S. CEMENT USED FOR MORTAR MUST BE PORTLAND CEMENT.

CONCRETE MASONRY (CONTINUED):

4. PROVIDE GROUT CONFORMING TO THE REQUIREMENTS OF ASTM C476 COARSE GROUT, WITH A MINIMUM COMPRESSIVE STRENGTH EQUAL TO OR GREATER THAN THE SPECIFIED COMPRESSIVE STRENGTH OF MASONRY (F'M) BUT NOT LESS THAN 2,000 PSI AT 28 DAYS.
5. PROVIDE CONCRETE MASONRY WITH A MINIMUM COMPRESSIVE STRENGTH (F'M) OF 2,000 PSI. PROVIDE CONCRETE MASONRY UNITS WITH A SPECIFIED MINIMUM NET AREA COMPRESSIVE STRENGTH OF 2,800 PSI.
6. PROVIDE REINFORCING STEEL CONFORMING TO ASTM A615, GRADE 60, DEFORMED BARS. REINFORCING STEEL REQUIRING WELDABILITY SHALL CONFORM TO ASTM A706, GRADE 60, DEFORMED BARS.
7. IN ADDITION TO THE MASONRY WALL REINFORCEMENT SHOWN ON THE DRAWINGS, PROVIDE THE FOLLOWING:
   A. #6 VERTICAL REINFORCEMENT AT CORNERS, WITHIN 16 INCHES OF EACH SIDE OF OPENINGS, WITHIN 8 INCHES OF EACH SIDE OF MOVEMENT JOINTS AND WITHIN 8 INCHES OF THE ENDS OF THE WALLS.
8. FULLY GROUT ALL CELLS CONTAINING REINFORCING STEEL, ALL CELLS IN CONTACT WITH EARTH OR FILL, AND BOTTOM TWO COURSES OF WALLS.
9. LAY MASONRY IN RUNNING BOND AND INTERLOCK MASONRY AT WALL INTERSECTIONS, UNLESS OTHERWISE NOTED.
10. REINFORCE MORTAR JOINTS OF MASONRY WALLS WITH HORIZONTAL JOINT REINFORCING AT 16" ON CENTER MAXIMUM. PROVIDE 9 GAUGE LADDER-TYPE HORIZONTAL JOINT REINFORCING CONFORMING TO ASTM A1064.
11. PROVIDE CONTINUOUS BOND BEAMS AT THE TOP ALL WALLS, AT BEARING ELEVATIONS, AND OTHER LOCATIONS SPECIFIED ON THE DRAWINGS.

STRUCTURAL STEEL:

1. FABRICATE AND ERECT STRUCTURAL STEEL CONFORMING TO THE REQUIREMENTS OF AMERICAN INSTITUTE OF STEEL CONSTRUCTION (AISC), "STEEL CONSTRUCTION MANUAL", 14TH EDITION, AISC 360-10.
2. SUBMIT ERECTION PLANS AND SHOP DETAILS AND RECEIVE APPROVAL BEFORE PROCEEDING WITH FABRICATION.
3. PROVIDE STRUCTURAL STEEL WIDE-FLANGE SHAPES CONFORMING TO ASTM A992 (Fy=50 KSI), HSS MEMBERS CONFORMING TO ASTM A500, GRADE B (RECTANGULAR/SQUARE HSS, Fy=46 KSI; ROUND HSS, Fy=42 KSI), PIPE CONFORMING TO ASTM A53, GRADE B (Fy = 35KSI) AND ALL OTHER MEMBERS CONFORMING TO ASTM A36 (Fy=36KSI).
4. WELD IN COMPLIANCE WITH AMERICAN WELDING SOCIETY AWS D1.1, "STRUCTURAL WELDING CODE." WELD ALL SHOP CONNECTIONS WITH CLASS E-70 SERIES ELECTRODES. PROVIDE FIELD CONNECTIONS WITH HIGH STRENGTH BOLTED CONNECTIONS EXCEPT WHERE NOTED.
5. DO NOT SHOP-PRIME STEEL SURFACES TO BE EMBEDDED IN CONCRETE, OR AT DESIGNATED FIELD-WELD LOCATIONS.
6. ALL STRUCTURAL STEEL EXPOSED TO WEATHER SHALL BE HOT DIP GALVANIZED IN ACCORDANCE WITH ASTM A123 OR A153 AND RECEIVE A PAINT SYSTEM PER THE PROJECT SPECIFICATIONS.

STEEL JOISTS:

1. DESIGN, MANUFACTURE, AND ERECT STEEL JOISTS ACCORDING TO THE SPECIFICATIONS, THE STEEL JOIST INSTITUTE STANDARDS AND SPECIFCATIONS, AND OSHA REGUALTIONS.
1. SUBMIT ERECTION PLANS, DETAILS, AND CALCULATIONS AND RECIEVE APPROVAL BEFORE PROCEEDING WITH FABRICATION.
2. DESIGN JOISTS FOR LOADING INDICATED ON DRAWINGS. SPECIAL JOISTS WITH NON-UNIFORM LOADING CONDITIONS MUST BE DESIGNED BY THE JOIST MANUFACTURER'S ENGINEER. SUBMIT CALCULATIONS STAMPED AND SIGNED BY A PROFESSIONAL ENGINEER IN THE STATE OF DELAWARE, FOR APPROVAL BY THE ENGINEER.
3. UNLESS NOTED OTHERWISE, DRAWINGS SHOW STEEL JOISTS AND BRIDGING SCHEMATICALLY ONLY. COORDINATE ACTUAL JOIST MEMBER SIZES, CONFIGURATIONS, AND BRIDGING SIZES AND LOCATIONS WITH THE STEEL JOIST FABRICATOR.
4. JOIST BRIDGING MUST BE DESIGNED BY THE MANUFACTURER. PROVIDE REQUIRED TOP AND BOTTOM CHORD BRIDGING SIZES AND SPACING PER JOIST MANUFACTURER'S REQUIREMENTS. ANCHOR ENDS OF ALL BRIDGING LINES TERMINATING AT WALLS OR BEAMS.
5. COORDINATE BRIDGING LOCATIONS WITH ALL OTHER DISCIPLINES' DRAWINGS.
6. COMPLY WITH OSHA REQUIREMENTS AND STEEL JOIST INSTITUTE RECOMMENDATIONS CONCERNING ERECTION STABILITY BRACING AND OTHER TEMPORARY ERECTION STABILITY REQUIREMENTS.

STEEL DECK:

1. FABRICATE AND ERECT ALL STEEL DECK CONFORMING TO THE REQUIREMENTS OF "STEEL DECK INSTITUTE" (SDI), DESIGN MANUAL FOR COMPOSITE DECKS, FORM DECKS AND ROOF DECKS-NO.31.
2. STEEL DECK SHALL BE FABRICATED OF G-90 GALVANIZED SHEETS CONFORMING TO ASTM C53-06a. STRUCTURAL QUALITY, AND FEDERAL SPECIFICATION QQ-S-775.
3. PROVIDE TYPE "N", 3 INCH DEEP, 20 GAUGE ROOF DECK. REQUIRED MINIMUM SECTION PROPERTIES ARE AS FOLLOWED.

   DESIGN THICKNESS: 0.0358 in.
   Ip = 0.848 in^4/ft
   Sp = 0.501 in^3/ft
   In = 1.079 in^4/ft
   Sn = 0.552 in^3/ft
   Fy = 33 KSI

STEEL DECK (CONTINUED):

4. SUBMIT ERECTION PLANS AND SHOP DETAILS AND RECEIVE APPROVAL BEFORE PROCEEDING WITH FABRICATION AND ERECTION. FAILURE TO COMPLY MAY RESULT IN CORRECTIVE WORK AT CONTRACTORS EXPENSE.
5. STAGGERING OF STEEL DECK END LAPS IS NOT PERMITTED.
6. DECK ENDS MAY BE EITHER BUTTED OR LAPPED OVER SUPPORTS
7. THE LOCATIONS AND NUMBER OF FASTENERS REQUIRED TO SATISFY ATTACHMENT OF DECK TO STEEL MEMBERS SHALL BE AS FOLLOWS:
   A. 24/4 PATTERN SHALL BE USED AT ALL SUPPORT FRAMING (STEEL TRUSSES) AND EMBEDDED PLATE AND BENT PLATE ON TOP OF THE PERIMETER CMU WALLS.
   B. 6 SIDE LAP CONNECTIONS ARE REQUIRED BETWEEN THE SUPPORT FRAMING. USE #10 STAINLESS STEEL, SELF-DRILLING, SCREWS FOR SIDE LAP CONNECTION.
8. ALL FIELD WELDING OF DECK SHALL BE IN STRICT ACCORDANCE WITH AWS D1.3 STRUCTURAL WELDING CODE-SHEET METAL.
9. A MINIMUM VISIBLE 5/8 INCH DIAMETER PUDDLE WELD OR AN ELONGATED WELD WITH AN EQUAL PERIMETER IS REQUIRED. FILLET WELDS WHEN USED, SHALL BE AT LEAST 1 INCH LONG, POWDER ACTUATED FASTENER (PAF) ARE ACCEPTABLE WITH ENGINEER'S APPROVAL.

ALUMINUM:

1. FABRICATE ALL STRUCTURAL ALUMINUM IN ACCORDANCE WITH THE SPECIFICATIONS OF THE ALUMINUM ASSOCIATION (AA) ADM1-2015, "ALUMINUM DESIGN MANUAL."
2. WELD ALL ALUMINUM IN ACCORDANCE WITH THE AMERICAN WELDING SOCIETY (AWS) D1.2, "STRUCTURAL WELDING CODE - ALUMINUM."
3. PROVIDE ALLOY AND TEMPER 6061-T6 FOR STRUCTURAL ALUMINUM.
4. I-BEAM SHAPES MUST BE ALUMINUM ASSOCIATION (AA) STANDARD I-BEAMS.
5. COAT ALL ALUMINUM IN CONTACT WITH CONCRETE AND OTHER DISSIMILAR METALS WITH BITUMINOUS PAINT ON THE CONTACT SURFACE.
6. PROVIDE TYPE 316 STAINLESS STEEL BOLTS FOR CONNECTING ALUMINUM MEMBERS.
7. ANGLES USED TO CONNECT ALUMINUM I-BEAM SHAPES MUST BE ALUMINUM ANGLES.

GRATING:

1. FABRICATE ALL GRATING IN ACCORDANCE WITH THE NATIONAL ASSOCIATION OF ARCHITECTURAL METAL MANUFACTURERS (NAAMM), "METAL BAR GRATING MANUAL" (ANSI/NAAMM MBG531-09).
2. PROVIDE SWAGED ALUMINUM, ALLOY 6063-T6, GRATING CONFORMING TO ASTM B221.
3. PROVIDE UN-PUNCHED HEAVY DUTY ALUMINUM PLANK GRATING, ALLOY 6061-T6.
4. PROVIDE GRATING DEPTH AS INDICATED ON THE DRAWINGS.
5. PROVIDE SERRATED TOP SURFACE FOR ALL BAR GRATING.
6. BAND OUTSIDE EDGES OF ALL GRATING AND ALL OPENINGS IN GRATING USING BARS OF THE SAME DEPTH AS THE BEARING BARS.

ADHESIVE ANCHORS :

1. PROVIDE THE FOLLOWING ANCHOR SYSTEM, OR APPROVED EQUAL, BULK-MIXED ADHESIVES ARE NOT PERMITTED:
   A. ANCHORAGE TO CONCRETE MASONRY
      a. HILTI HIT-HY 70 MASONRY ADHESIVE ANCHORING SYSTEM WITH HILTI HAS-R THREADED ROD.
      b. PROVIDE MESH SLEEVE AT HOLLOW MASONRY LOCATIONS.
   B. ANCHORAGE TO CONCRETE
      a. HILTI HIT-HY 200 ADHESIVE ANCHORING SYSTEM WITH HILTI HAS-R THREADED ROD.
2. PROVIDE TYPE 316 STAINLESS STEEL ANCHORS.
3. INSTALL ADHESIVE ANCHORS WITH A MINIMUM EDGE DISTANCE OF 4 INCHES TO ANY FREE EDGE OF MASONRY, OR EDGE DISTANCE INDICATED ON DRAWINGS, WHICHEVER IS GREATER.
4. INSTALL ADHESIVE ANCHORS WITH TRAINED QUALIFIED PERSONNEL, IN ACCORDANCE WITH THE MANUFACTURER'S PRINTED INSTALLATION INSTRUCTIONS.
5. PROVIDE THOROUGHLY CLEANED ANCHOR HOLES PRIOR TO ADHESIVE INJECTION, AS REQUIRED BY THE MANUFACTURER'S PRINTED INSTALLATION INSTRUCTIONS. PROTECT DRILLED AND CLEANED ANCHOR HOLES FROM CONTAMINATION UNTIL THE ADHESIVE IS INSTALLED.
6. PROVIDE ANCHORS CLEAN, OIL-FREE, AND FREE OF LOOSE RUST, PAINT, OR OTHER COATINGS.
7. PROVIDE INSTALLED ADHESIVE ANCHORS SECURELY FIXED IN-PLACE TO PREVENT DISPLACEMENT WHILE THE ADHESIVE CURES.
8. ARRANGE FOR AN ANCHOR MANUFACTURER'S REPRESENTATIVE TO PROVIDE ONSITE INSTALLATION TRAINING FOR ALL OF THEIR ANCHORING PRODUCTS SPECIFIED. THE ENGINEER MUST RECEIVE DOCUMENTED CONFIRMATION THAT ALL OF THE CONTRACTOR'S PERSONNEL WHO INSTALL ANCHORS ARE TRAINED PRIOR TO THE COMMENCEMENT OF INSTALLING ANCHORS.
9. PERSONNEL INSTALLING HORIZONTAL OR OVERHEAD ADHESIVE ANCHORS MUST BE QUALIFIED PER THE SPECIFICATIONS.
10. DO NOT DAMAGE EXISTING REINFORCING STEEL IN THE CONCRETE OR MASONRY DURING ANCHOR INSTALLATION, UNLESS OTHERWISE NOTED ON THE DRAWINGS. PRIOR TO ANCHOR INSTALLATION, DETERMINE LOCATION OF EXISTING REINFORCING STEEL BY NON-DESTRUCTIVE MEANS AND NOTIFY THE ENGINEER OF ANY CONFLICTS BETWEEN REINFORCING STEEL AND ANCHOR LOCATION PRIOR TO FABRICATION OF MATERIALS.

PLOT DATE: 12/7/2018 14:45 PM PAGE SETUP: WRA-PDF C36X24) PLOT STYLE: WRA_2006.CTB PAPER SIZE:ARCH FULL BLEED D (36.00 X 24.00 INCHES)
N:\14256-028\CADD\14256028S00-01.dwg

REVISIONS

CLIENT INFORMATION

SUSSEX COUNTY, DE
ENGINEERING
DEPARTMENT

INLAND BAYS RWF
PHASE #2 EXPANSION:
CONTRACT S19-10

KEY PLAN

GRAPHIC SCALES

SIGNATURE



WRA
Whitman, Requardt & Associates, LLP
801 South Caroline Street, Baltimore, Maryland 21231

GENERAL STRUCTURAL NOTES

DRAWING NO.

S00.01

SCALE: NONE		
DATE: DEC. 2018	SHEET 63 OF 217	
DES: TJC	DRAWN: CJS	CHECK: BAE

GENERAL STRUCTURAL NOTES (CONTINUED)

ADHESIVE ANCHORS (CONTINUED):

11. DESIGN BASIS FOR ADHESIVE ANCHORS IS INDICATED ABOVE. SUBSTITUTIONS WILL BE CONSIDERED, BUT PRODUCT MUST MEET OR EXCEED ALL CRITERIA OF THE SPECIFIED ANCHOR. SUBSTITUTION REQUESTS MUST BE APPROVED IN WRITING BY THE ENGINEER PRIOR TO USE. PROVIDE PRODUCT DATA AND CALCULATIONS DEMONSTRATING THE SUBSTITUTED PRODUCT IS CAPABLE OF ACHIEVING THE PERFORMANCE OF THE SPECIFIED PRODUCT. SUBSTITUTIONS WILL BE EVALUATED BY THEIR HAVING AN ICC ESR SHOWING COMPLIANCE WITH THE RELEVANT BUILDING CODE FOR SEISMIC USES, LOAD RESISTANCE, INSTALLATION CATEGORY, AND AVAILABILITY OF COMPREHENSIVE INSTALLATION INSTRUCTIONS. ADHESIVE ANCHOR EVALUATION WILL ALSO CONSIDER CREEP, IN-SERVICE TEMPERATURES AND INSTALLATION TEMPERATURE.

MECHANICAL ANCHORS:

1. THE MECHANICAL ANCHOR SYSTEM USED FOR POST INSTALLED ANCHORAGE TO CONCRETE MUST CONFORM TO THE REQUIREMENTS OF THE MOST RECENTLY PUBLISHED ACI 355.2, "QUALIFICATION OF POST-INSTALLED MECHANICAL ANCHORS IN CONCRETE AND COMMENTARY." EACH MECHANICAL ANCHOR SYSTEM MUST SATISFY THE STRENGTH REQUIREMENTS FOR ITS USE. MECHANICAL ANCHORAGE DESIGN IS IN ACCORDANCE WITH ACI 318-14. MECHANICAL ANCHORS IN CONCRETE MUST BE QUALIFIED FOR USE IN CRACKED CONCRETE IN ACCORDANCE WITH ACI 355.2. PROVIDE THE FOLLOWING ANCHOR SYSTEMS, OR APPROVED EQUALS:

   A. ANCHORAGE TO CONCRETE
      i. HILTI KWIK BOLT TZ

2. PROVIDE TYPE 316 STAINLESS STEEL ANCHORS.

3. CONCRETE AT THE TIME OF MECHANICAL ANCHOR INSTALLATION MUST HAVE A MINIMUM AGE OF 21 DAYS.

4. INSTALL MECHANICAL ANCHORS WITH A MINIMUM EDGE DISTANCE OF 5 INCHES TO ANY FREE EDGE OF CONCRETE, OR EDGE DISTANCE INDICATED ON DRAWINGS, WHICHEVER IS GREATER.

5. INSTALL MECHANICAL ANCHORS WITH TRAINED QUALIFIED PERSONNEL, IN ACCORDANCE WITH THE MANUFACTURER'S PRINTED INSTALLATION INSTRUCTIONS.

6. ARRANGE FOR AN ANCHOR MANUFACTURER'S REPRESENTATIVE TO PROVIDE ONSITE INSTALLATION TRAINING FOR ALL OF THEIR ANCHORING PRODUCTS SPECIFIED. THE ENGINEER MUST RECEIVE DOCUMENTED CONFIRMATION THAT ALL OF THE CONTRACTOR'S PERSONNEL WHO INSTALL ANCHORS ARE TRAINED PRIOR TO THE COMMENCEMENT OF INSTALLING ANCHORS.

7. DO NOT DAMAGE EXISTING REINFORCING STEEL IN THE CONCRETE DURING ANCHOR INSTALLATION, UNLESS OTHERWISE NOTED ON OTHE DRAWINGS. PRIOR TO ANCHOR INSTALLATION, DETERMINE LOCATION OF EXISTING REINFORCING STEEL BY NON-DESTRUCTIVE MEANS AND NOTIFY THE ENGINEER OF ANY CONFLICTS BETWEEN REINFORCING STEEL AND ANCHOR LOCATION PRIOR TO FABRICATION OF MATERIALS.

8. DESIGN BASIS FOR MECHANICAL ANCHORS IS INDICATED ABOVE. SUBSTITUTIONS WILL BE CONSIDERED, BUT PRODUCT MUST MEET OR EXCEED ALL CRITERIA OF THE SPECIFIED ANCHOR. SUBSTITUTION REQUESTS MUST BE APPROVED IN WRITING BY THE ENGINEER PRIOR TO USE. PROVIDE PRODUCT DATA AND CALCULATIONS DEMONSTRATING THE SUBSTITUTED PRODUCT IS CAPABLE OF ACHIEVING THE PERFORMANCE OF THE SPECIFIED PRODUCT. SUBSTITUTIONS WILL BE EVALUATED BY THEIR HAVING AN ICC ESR SHOWING COMPLIANCE WITH THE RELEVANT BUILDING CODE FOR SEISMIC USES, LOAD RESISTANCE, INSTALLATION CATEGORY, AND AVAILABILITY OF COMPREHENSIVE INSTALLATION INSTRUCTIONS.

DELEGATED DESIGN

1. DESIGN RESPONSIBILITY FOR THE FOLLOWING ENGINEERED SYSTEMS AND COMPONENTS IS DELEGATED TO A QUALIFIED PROFESSIONAL ENGINEER, SELECTED AND HIRED BY THE CONTRACTOR. THESE SYSTEMS AND COMPONENTS INCLUDE, BUT ARE NOT LIMITED TO:

   A. STAIRS, LANDINGS, AND ASSOCIATED CONNECTIONS
   B. LADDERS
   C. GUARDRAILS AND HANDRAILS
   D. TEMPORARY SUPPORT OF EXCAVATION AND STRUCTURES
   E. CONCRETE FORMWORK AND SHORING

2. DELEGATED ENGINEERED SYSTEMS AND COMPONENTS MUST SATISFY 2012 IBC LOAD COMBINATIONS.

3. COORDINATE WITH THE CONTRACT DOCUMENTS FOR PROFESSIONAL LICENSURE AND SEALING REQUIREMENTS, DESIGN CRITERIA, DETAILS OF THE SYSTEMS AND COMPONENTS, SUBMITTAL REQUIREMENTS, AND CALCULATION REQUIREMENTS.

DESIGN LOADS AND CRITERIA

ALL LOADS INDICATED BELOW ARE UNFACTORED

1. RISK CATEGORY: III

2. DEAD LOADS:
   A. STRUCTURES: ACTUAL WEIGHT
   B. WEIGHT OF SOIL = 62.5 PCF FOR RESISTING UPLIFT
   C. WEIGHT OF SOIL = 125 PCF FOR DEAD LOAD
   D. SUPERIMPOSED HANGING MEP LOAD: 15 PSF

3. LIVE LOADS:

   A. TOP SLABS AND GRATING AT GRIT FACILITY, HEADWORKS, AERATION DISTRIBUTION STRUCTURE, AND CLARIFIER DISTRIBUTION STRUCTURE: 150 PSF OR ACTUAL WEIGHT OF EQUIPMENT
   B. SLABS-ON-GROUND AND FLOORS: 150 PSF OR ACTUAL WEIGHT OF EQUIPMENT
   C. STAIRS AND LANDINGS: 100 PSF
   D. GUARDRAIL = 200 LBS AT EACH POST OR 50 PLF ALONG THE TOP RAIL, WHICHEVER IS GREATER.

DESIGN LOADS (CONTINUED):

4. ROOF LIVE LOAD: 20 PSF OR 300 LB CONCENTRATED LOAD

5. ROOF SNOW LOAD:
   A. GROUND SNOW LOAD (PG): 20 PSF
   B. EXPOSURE FACTOR (CE): 1
   C. THERMAL FACTOR (CT): 1.0
   D. SNOW LOAD IMPORTANCE FACTOR (IS): 1.1
   E. FLAT ROOF SNOW LOAD (PF): 17

6. WIND LOAD:
   A. ULTIMATE WIND SPEED (VULT): 130 MPH
   B. NOMINAL WIND SPEED (VASD): 101 MPH
   C. EXPOSURE CATEGORY: C
   D. INTERNAL PRESSURE COEFFICIENT: ± 0.18
   E. COMPONENTS AND CLADDING: PER ASCE 7-10, SEE TABLE FOR PUMP AND BLOWER BUILDING AND FILTERED IRRIGATION PUMP STATION BUILDING DIAGRAMS

7. SEISMIC LOAD:
   A. SEISMIC IMPORTANCE FACTOR (IE): 1.25
   B. MAXIMUM EARTHQUAKE SPECTRAL RESPONSE ACCELERATION AT SHORT PERIODS: SS=0.096G
   C. MAXIMUM EARTHQUAKE SPECTRAL RESPONSE ACCELERATION AT ONE-SECOND: S1=0.044G
   D. SITE CLASSIFICATION: D
   E. SITE SEISMIC COEFFICIENT: FA=1.6; FV=2.4
   F. SPECTRAL RESPONSE COEFFICIENTS: SDS = 0.102; SD1 = 0.071
   G. SEISMIC DESIGN CATEGORY: B
   H. ANALYSIS PROCEDURE: EQUIVALENT LATERAL FORCE
   I. BASIC SEISMIC FORCE RESISTING SYSTEM:
      i. PUMP AND BLOWER BUILDING & FILTERED IRRIGATION PUMP STATION: ORDINARY REINFORCED MASONRY SHEAR WALLS
   J. RESPONSE MODIFICATION FACTOR, R:
      i. PUMP AND BLOWER BUILDING & FILTERED IRRIGATION PUMP STATION: 2
   K. SEISMIC RESPONSE COEFFICIENT, Cs:
      i. PUMP AND BLOWER BUILDING & FILTERED IRRIGATION PUMP STATION: 0.064
   L. DESIGN BASE SHEAR
      i. PUMP AND BLOWER BUILDING: 10 KIPS
      ii. FILTERED IRRIGATION PUMP STATION: 20 KIPS

CODES AND STANDARDS:

1. SUSSEX COUNTY, DE BUILDING CODE

2. INTERNATIONAL BUILDING CODE IBC (2012), INCLUDING THE MODIFICATIONS MADE BY LOCAL JURISDICTION

3. AMERICAN INSTITUTE OF STEEL CONSTRUCTION AISC-360 (2010) "SPECIFICATION FOR STRUCTURAL STEEL BUILDINGS."

4. STEEL DECK INSTITUTE (SDI)
   A. ANSI/RD1.0 (2010), "STANDARD FOR STEEL ROOF DECK."
   B. SDI-QA/QC (2011), "STANDARD FOR QUALITY CONTROL AND QUALITY ASSURANCE FOR INSTALLATION OF STEEL DECK."

5. STEEL JOIST INSTITUTE (SJI)
   A. SJI-K (2010), "STANDARD SPECIFICATION FOR OPEN WEB STEEL JOISTS, K-SERIES."
   B. SJI-LH/DLH, "STANDARD SPECIFICATION FOR LONGSPAN STEEL JOISTS, LH-SERIES AND DEEP LONGSPAN STEEL JOISTS, DLH-SERIES."

6. AMERICAN CONCRETE INSTITUTE ACI-350 (2006), "CODE REQUIREMENTS FOR ENVIRONMENTAL ENGINEERING CONCRETE STRUCTURES."

7. AMERICAN CONCRETE INSTITUTE ACI-318 (2011), "BUILDING CODE REQUIREMENTS FOR STRUCTURAL CONCRETE."

8. AMERICAN CONCRETE INSTITUTE ACI-530 (2011), "BUILDING CODE REQUIREMENTS FOR MASONRY STRUCTURES" AND ACI-530.1 (2011), "SPECIFICATION FOR MASONRY STRUCTURES."

9. AMERICAN SOCIETY OF CIVIL ENGINEERS ASCE 7 (2010), "MINIMUM DESIGN LOADS FOR BUILDING AND OTHER STRUCTURES."

10. AMERICAN ASSOCIATION OF STATE HIGHWAY AND TRANSPORTATION OFFICIALS (AASHTO) "STANDARD SPECIFICATIONS FOR HIGHWAY BRIDGES."

11. ALUMINUM ASSOCIATES "ALUMINUM DESIGN MANUAL." (2010)

12. AMERICAN WELDING SOCIETY AWS D1.1 (2010), "STRUCTURAL WELDING CODE - STEEL."

13. AMERICAN WELDING SOCIETY AWS D1.2 (2008), "STRUCTURAL WELDING CODE - ALUMINUM"

14. AMERICAN WELDING SOCIETY AWS D1.3 (2008), "STRUCTURAL WELDING CODE-SHEET STEEL"

STRUCTURAL ABBREVIATIONS

ADDL	ADDITIONAL	IF	INSIDE FACE
APPROX	APPROXIMATE	JT	JOINT
ARCH	ARCHITECT	LF	LINEAR FEET
BLDG	BUILDING	LG	LONG
BM	BEAM	LP	LOW POINT
BOT	BOTTOM	MAX	MAXIMUM
BOS	BOTTOM OF STEEL	MECH	MECHANICAL
BRG	BEARING	MEP	MECHANICAL, ELECTRICAL, AND PLUMBING
CLR	CLEAR		
CMU	CONCRETE MASONRY UNIT	MIN	MINIMUM
COL	COLUMN	NF	NEAR FACE
CONC	CONCRETE	NS	NEAR SIDE
CONT	CONTINUE, CONTINUOUS	OC	ON CENTER
CONN	CONNECT, CONNECTION	OD	OUTSIDE DIAMETER
CTR	CENTER	OPNG	OPENING
CU FT	CUBIC FEET	PART	PARTIAL
CU IN	CUBIC INCH	PL	PLATE
CU YD	CUBIC YARD	PVC	POLYVINYL CHLORIDE
DEMO	DEMOLITION, DEMOLISH	REF	REFERENCE
DET	DETAIL	REINF	REINFORCE, REINFORCEMENT, REINFORCING
DIA	DIAMETER		
DIAG	DIAGONAL, DIAGRAM	REQD	REQUIRED
DIM	DIMENSION	REV	REVISION
DWG	DRAWING	SIM	SIMILAR
EA	EACH	SQ	SQUARE
EF	EACH FACE	STD	STANDARD
EL	ELEVATION	STIFF	STIFFENER
ELEC	ELECTRIC, ELECTRICAL	T&B	TOP AND BOTTOM
ELEV	ELEVATOR	TEMP	TEMPORARY
ENGR	ENGINEER	THRU	THROUGH
EQ	EQUAL	TOC	TOP OF CONCRETE
EW	EACH WAY	TOF	TOP OF FOOTING
EXIST	EXISTING	TOS	TOP OF STEEL
EXP	EXPANSION	TOW	TOP OF WALL
EXT	EXTERIOR	TYP	TYPICAL
FS	FAR SIDE	UON	UNLESS OTHERWISE NOTED
FT	FOOT, FEET	VERT	VERTICAL
FTG	FOOTING	WP	WORKING POINT
GALV	GALVANIZE, GALVANIZED	WWF	WELDED WIRE FABRIC
HORIZ	HORIZONTAL	X-BRACE	CROSS BRACE
HP	HIGH POINT		

LAP SPLICE LENGTH					MINIMUM TENSION EMBEDMENTS			
BAR SIZE	SLAB AND WALL		BEAM		STD 90° HOOK		STD 180° HOOK	
ENGLISH	OTHER BARS	TOP BARS	OTHER BARS	TOP BARS	ldh	12db	ldh	4db
#3	12"	13"	12"	13"	6"	5"	6"	3"
#4	14"	18"	17"	22"	6"	6"	6"	3"
#5	17"	22"	25"	32"	8"	8"	8"	3"
#6	20"	26"	34"	44"	9"	9"	9"	3"
#7	33"	43"	49"	63"	11"	11"	11"	4"
#8	42"	54"	56"	72"	12"	12"	12"	4"
#9	52"	67"	63"	81"	14"	14"	14"	5"
#10	63"	82"	71"	92"	16"	16"	16"	6"
#11	75"	97"	78"	102"	17"	17"	17"	6"

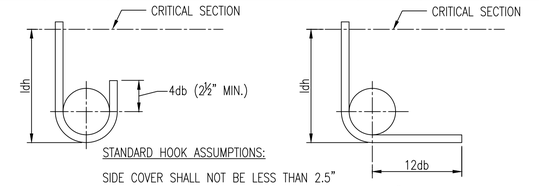

STANDARD HOOK ASSUMPTIONS:

SIDE COVER SHALL NOT BE LESS THAN 2.5"
END COVER ON 90° HOOK SHALL NOT BE LESS THAN 2"

STANDARD 180° AND 90° END HOOKS

LAP SPLICE ASSUMPTIONS:

CONCRETE: 5000 PSI COMPRESSIVE STRENGTH (NORMALWEIGHT CONCRETE)

SLAB AND WALL: 6" MINIMUM REBAR SPACING WITH CONCRETE COVER = 1.5" CLEAR

BEAM: MINIMUM CLEAR SPACING BETWEEN BARS = 1.5 db (1.5" MIN). MINIMUM CONCRETE COVER = 1.5" CLEAR. MINIMUM STIRRUP #4@12" PROVIDED.

TOP BAR: TOP BAR FOR SLAB AND BEAM SHALL BE DEFINED AS REINFORCEMENT SO PLACED THAT MORE THAN 12" OF CONCRETE IS CAST BELOW THE SPLICE.

TENSION LAP SPLICE AND STANDARD HOOK LENGTH (ACI 350-06)

(NON-EPOXY COATED)

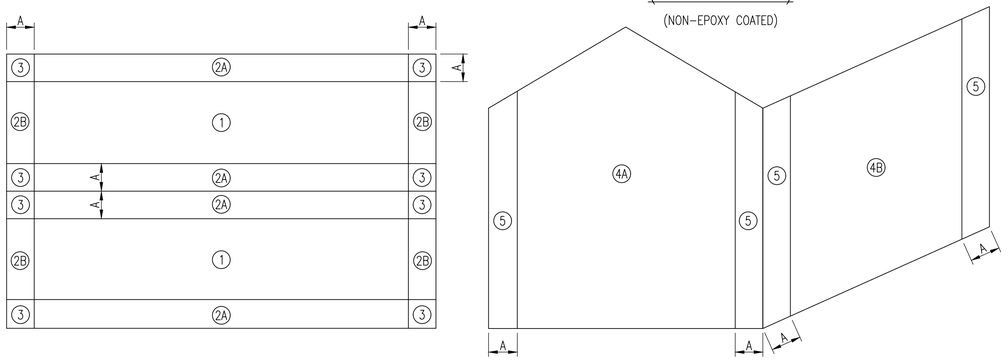

PUMP AND BLOWER BUILDING NO.2

DESIGN WIND PRESSURES (ASD)

ZONE	EFFECTIVE WIND AREA (SQ FT)	(-) PRESSURES (PSF)	(+) PRESSURES (PSF)
1	100	-33	16
2A	25	-58	19
2B	60	-50	16
3	15	-88	20
4A	500	-33	27
4B	435	-34	28
5	155	-44	33
OVERHANG 2	50	-73	16
OVERHANG 3	10	-123	16

NOTES:
1. A = 4.2 FT
2. PLUS AND MINUS SIGNS SIGNIFY NET PRESSURES ACTING TOWARD AND AWAY FROM THE SURFACES, RESPECTIVELY.
3. ONLY UNFACTORED WIND LOADS ARE SHOWN. USE LOADS PROVIDED IN DESIGN LOADS AND LOAD COMBINATIONS ACCORDING TO ASCE 7-10 TO DETERMINE TOTAL FACTORED COMBINED LOADS.

FILTERED IRRIGATION PUMPING STATION

DESIGN WIND PRESSURES (ASD)

ZONE	EFFECTIVE WIND AREA (SQ FT)	(-) PRESSURES (PSF)	(+) PRESSURES (PSF)
1	200	-33	16
2A	70	-51	18
2B	115	-46	16
3	35	-53	19
4A	500	-33	29
4B	500	-33	29
5	100	-37	33
OVERHANG 2	120	-73	16
OVERHANG 3	10	-123	16

NOTES:
1. A = 6.2 FT
2. PLUS AND MINUS SIGNS SIGNIFY NET PRESSURES ACTING TOWARD AND AWAY FROM THE SURFACES, RESPECTIVELY.
3. ONLY UNFACTORED WIND LOADS ARE SHOWN. USE LOADS PROVIDED IN DESIGN LOADS AND LOAD COMBINATIONS ACCORDING TO ASCE 7-10 TO DETERMINE TOTAL FACTORED COMBINED LOADS.

A / S00.02 COMPONENT AND CLADDING WIND LOAD ON WALLS AND ROOF

NOT TO SCALE

REVISIONS

CLIENT INFORMATION

SUSSEX COUNTY, DE ENGINEERING DEPARTMENT

INLAND BAYS RWF PHASE #2 EXPANSION: CONTRACT S19-10

KEY PLAN

GRAPHIC SCALES

SIGNATURE



Whitman, Requardt & Associates, LLP
801 South Caroline Street, Baltimore, Maryland 21231

GENERAL STRUCTURAL NOTES AND TYPICAL DETAILS

DRAWING NO.

S00.02

SCALE: NONE		
DATE: DEC. 2018	SHEET 64 OF 217	
DES: TJC	DRAWN: CJS	CHECK: BAE

PLOT DATE: 12/7/2018 1:14:54 PM PAGE SETUP: WRA-PDF (36X24) PLOT STYLE: WRA_2006.CTB PAPER SIZE:ARCH FULL BLEED D (36.00 X 24.00 INCHES)
N:\14256-026\CADD\14256026S00-02.dwg

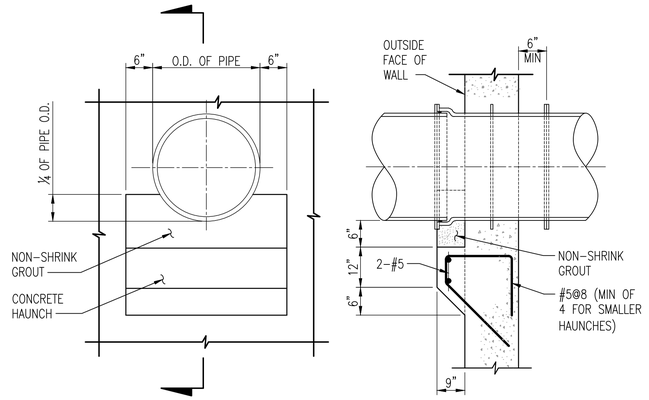

ELEVATION SECTION

NOTES:
1. WHERE INVERT OF PIPE IS 2'-0" OR LESS ABOVE FOOTING, OMIT HAUNCH AND BUILD CRADLE ON FOOTING.
2. ALL EXPOSED STEEL PARTS SHALL BE BITUMINOUS COATED TO A DRY THICKNESS OF 12 MILS.
3. TYPICAL AT ALL DUCTILE IRON PIPES PENETRATING WALLS.

A S00.03 TYPICAL M.J. BELL – D.I. FLANGE WALL CASTING DETAIL

NOT TO SCALE

LAP SPLICE LENGTH						MINIMUM TENSION EMBEDMENTS			
BAR SIZE		SLAB AND WALL		BEAM		STD 90° HOOK		STD 180° HOOK	
SOFT METRIC	ENGLISH	OTHER BARS	TOP BARS	OTHER BARS	TOP BARS	ldh	12db	ldh	4db
#10	#3	12"	14"	12"	14"	6"	5"	6"	3"
#13	#4	14"	19"	18"	23"	7"	6"	7"	3"
#16	#5	18"	23"	26"	34"	8"	8"	8"	3"
#19	#6	21"	28"	35"	46"	10"	9"	10"	3"
#22	#7	35"	45"	51"	67"	11"	11"	11"	4"
#25	#8	44"	57"	59"	76"	13"	12"	13"	4"
#29	#9	54"	70"	66"	86"	15"	14"	15"	5"
#32	#10	66"	86"	74"	96"	16"	16"	16"	6"
#36	#11	79"	103"	82"	107"	18"	17"	18"	6"

LAP SPLICE ASSUMPTIONS:

CONCRETE: 4500 PSI COMPRESSIVE STRENGTH (NORMALWEIGHT CONCRETE)
SLAB AND WALL: 6" MINIMUM REBAR SPACING WITH CONCRETE COVER = 1.5" CLEAR
BEAM: MINIMUM CLEAR SPACING BETWEEN BARS = 1.5 db (1.5" MIN). MINIMUM CONCRETE COVER = 1.5" CLEAR. MINIMUM STIRRUP #4@12" PROVIDED.
TOP BAR: TOP BAR FOR SLAB AND BEAM SHALL BE DEFINED AS REINFORCEMENT SO PLACED THAT MORE THAN 12" OF CONCRETE IS CAST BELOW THE SPLICE.

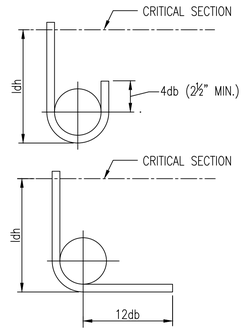

STANDARD HOOK ASSUMPTIONS:

SIDE COVER SHALL NOT BE LESS THAN 2.5"
END COVER ON 90° HOOK SHALL NOT BE LESS THAN 2"

STANDARD 180° AND 90° END HOOKS

TENSION LAP SPLICE AND STANDARD HOOK LENGTH (ACI 318-08/ACI 350-06)

(NON-EPOXY COATED)

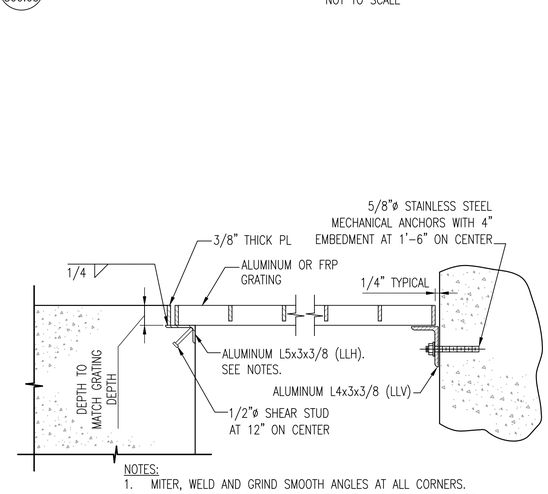

NOTES:
1. MITER, WELD AND GRIND SMOOTH ANGLES AT ALL CORNERS.
2. MANUFACTURER'S STANDARD FRP EMBED CURB ANGLE MAY BE USED AT LOCATIONS WITH FRP GRATING.

B S00.03 TYPICAL GRATING EDGE ANGLE DETAIL

NOT TO SCALE

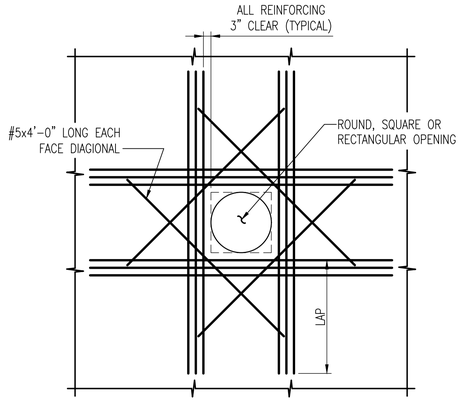

PROVIDE ADDITIONAL REINFORCING, (MINIMUM OF ONE-HALF THE NUMBER OF PRINCIPLE REINFORCING BARS INTERRUPTED BY THE OPENING) ON EACH SIDE AND EACH FACE OF THE OPENING.

C S00.03 ADDITIONAL REINFORCING AROUND OPENINGS IN CONCRETE

NO TO SCALE

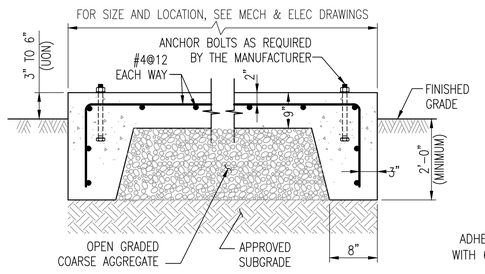

D S00.03 TYPICAL EXTERIOR EQUIPMENT PAD DETAIL

NOT TO SCALE

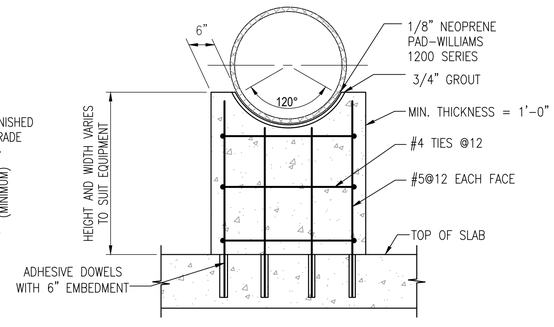

E S00.03 TYPICAL PIPE SUPPORT

NOT TO SCALE

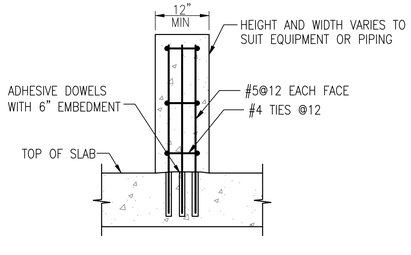

F S00.03 TYPICAL VALVE PEDESTAL SUPPORT

NOT TO SCALE

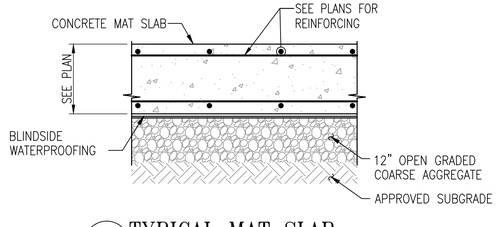

G S00.03 TYPICAL MAT SLAB

NOT TO SCALE

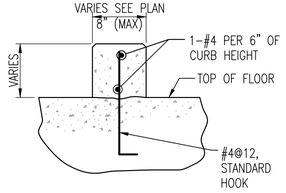

H S00.03 TYPICAL CONCRETE CURB

NOT TO SCALE

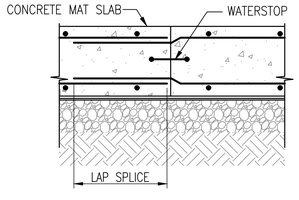

NOTE: LOCATE WATERSTOP IN THE MIDDLE THIRD OF THE CONCRETE FOUNDATION MAT-SLAB

I S00.03 TYPICAL CONSTRUCTION JOINT IN MAT SLAB

NOT TO SCALE

REVISIONS

CLIENT INFORMATION

SUSSEX COUNTY, DE
ENGINEERING
DEPARTMENT

INLAND BAYS RWF
PHASE #2 EXPANSION:
CONTRACT S19-10

KEY PLAN

GRAPHIC SCALES

SIGNATURE

BRUCE A. ENO
DELAWARE LICENSED
No. 19271
12/7/18
PROFESSIONAL ENGINEER

Whitman, Requardt & Associates, LLP
801 South Caroline Street, Baltimore, Maryland 21231

TYPICAL STRUCTURAL DETAILS

DRAWING NO.

S00.03

SCALE: NONE		
DATE: DEC. 2018	SHEET 65 OF 217	
DES: WAY	DRAWN: CJS	CHECK: BAE

PLOT DATE: 12/7/2018 9:56:06 PM PAGE SETUP: WRA-PDF (36X24) PLOT STYLE: WRA_2006CTB PAPER SIZE:ARCH FULL BLEED D (36.00 X 24.00 INCHES)
N:\14256-028\CADD\14256028S00-03.dwg

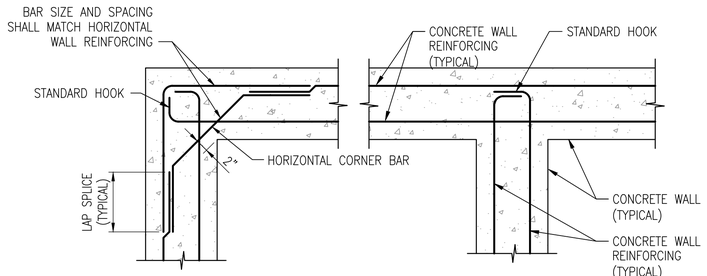

NOTES:
1. VERTICAL REINFORCING NOT SHOWN FOR CLARITY.
2. SEE TYPICAL VERTICAL CONSTRUCTION JOINT IN CONCRETE WALL FOR VERTICAL CONSTRUCTION JOINTS.

TYPICAL REINFORCING DETAILS AT WALL INTERSECTIONS

A S00.04

NOT TO SCALE

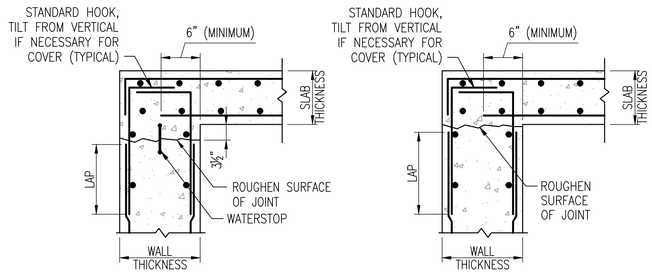

AT LOCATIONS WITH A WATERSTOP

AT LOCATIONS WITHOUT A WATERSTOP

TYPICAL TOP OF WALL AT SLAB

B S00.04

NOT TO SCALE

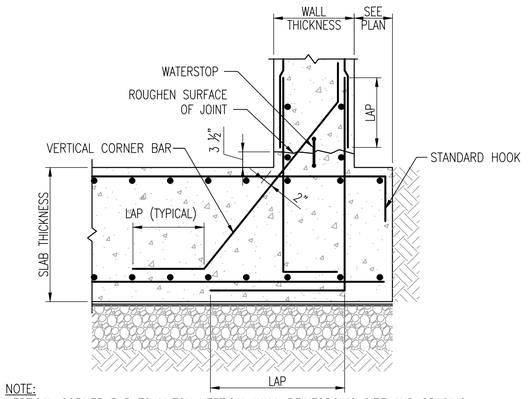

NOTE:
VERTICAL CORNER BAR TO MATCH VERTICAL WALL REINFORCING SIZE AND SPACING.

TYPICAL BASE OF WALL AT MAT SLAB

C S00.04

NOT TO SCALE

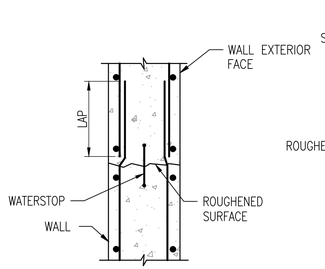

TYPICAL

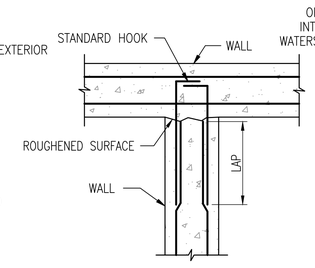

AT TEE INTERSECTION WITHOUT WATERSTOP

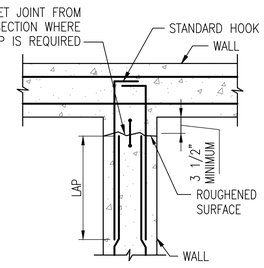

AT TEE INTERSECTION WITH WATERSTOP

TYPICAL VERTICAL CONSTRUCTION JOINTS IN WALLS

D S00.04

NOT TO SCALE

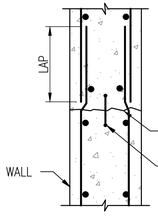

TYPICAL HORIZONTAL CONSTRUCTION JOINTS IN WALLS

E S00.04

NOT TO SCALE

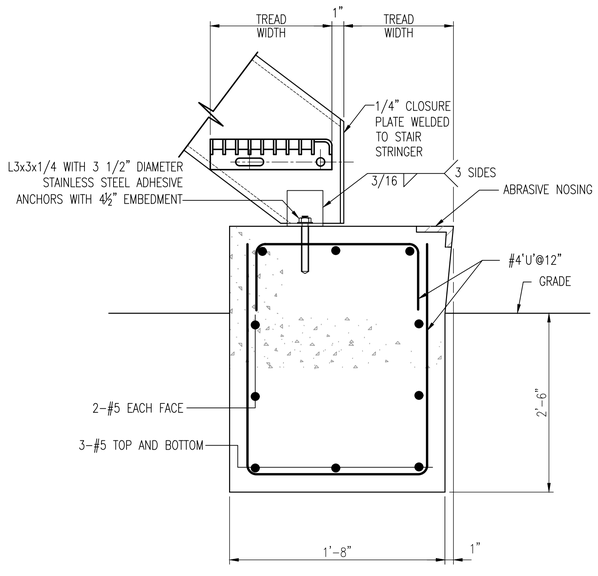

STAIR CONNECTION TO CONCRETE

F S00.04

NO TO SCALE

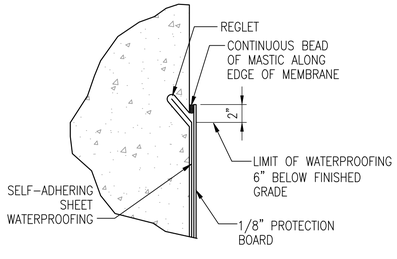

TOP TERMINATION

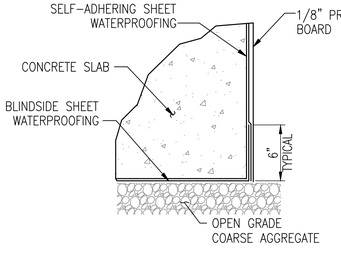

UNDER CONCRETE MAT SLAB

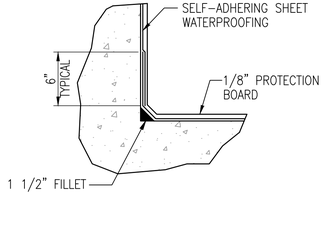

AT INSIDE CORNER

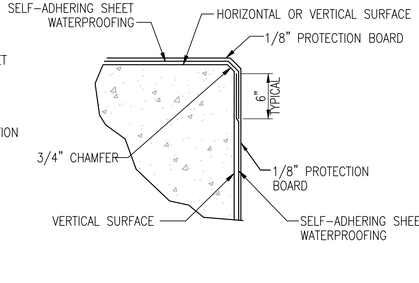

AT OUTSIDE CORNER

SELF-ADHERING SHEET WATERPROOFING DETAILS

G S00.04

NOT TO SCALE

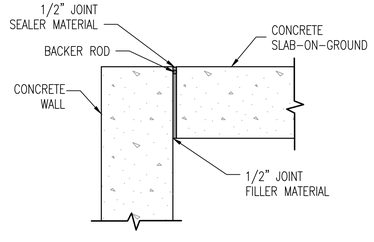

TYPICAL ISOLATION JOINT

H S00.04

NOT TO SCALE

REVISIONS		

CLIENT INFORMATION

SUSSEX COUNTY, DE
ENGINEERING
DEPARTMENT

INLAND BAYS RWF
PHASE #2 EXPANSION:
CONTRACT S19-10

KEY PLAN

GRAPHIC SCALES

SIGNATURE

JESSE A. ENSLEY
No. 19271
12/7/18
DELAWARE
PROFESSIONAL ENGINEER

Whitman, Requardt & Associates, LLP
801 South Caroline Street, Baltimore, Maryland 21231

TYPICAL STRUCTURAL DETAILS

DRAWING NO.

S00.04

SCALE: NONE		
DATE: DEC. 2018		SHEET 66 OF 217
DES: WAY	DRAWN: CJS	CHECK: BAE

PLOT DATE: 12/7/2018 10:56 PM PAGE SETUP: VRA-PDF (36X24) PLOT STYLE: VRA_2006.CTB PAPER SIZE:ARCH FULL BLEED D (36.00 X 24.00 INCHES)
N:\14256-025\CADD\14256028000-04.dwg

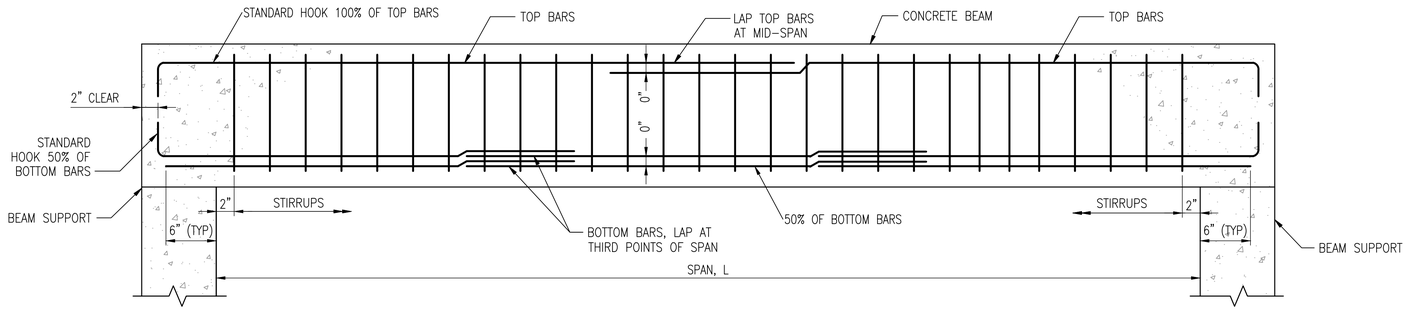

A S00.05 TYPICAL CONCRETE BEAM ELEVATION

NOT TO SCALE

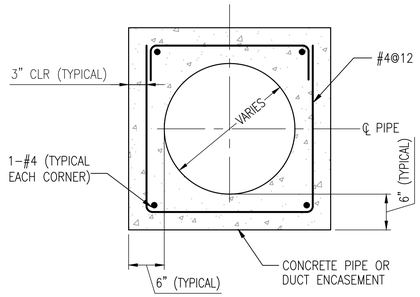

B S00.05 TYPICAL PIPE OR DUCT ENCASEMENT

NOT TO SCALE

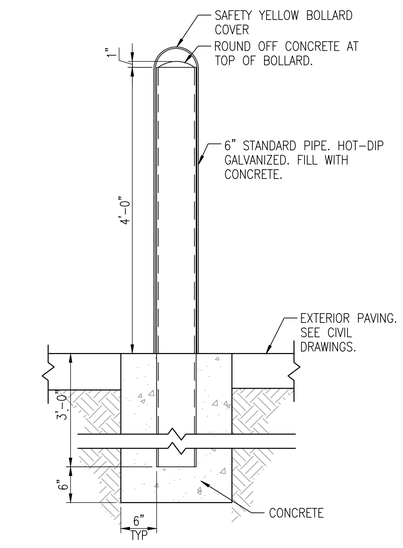

NOTE:
WHERE TYPICAL EXTERIOR BOLLARD DETAIL WOULD CONFLICT WITH A FOOTING, USE BASE PLATE AND MECHANICAL ANCHORS FROM "TYPICAL INTERIOR BOLLARD" DETAIL AND ANCHOR TO TOP OF FOOTING WITH (4) 3/4" Ø ANCHORS. BACKFILL TO GRADE ELEVATION WITH 6" (MINIMUM) THICKNESS OF CONCRETE ALL AROUND BOLLARD.

C S00.05 TYPICAL EXTERIOR BOLLARD

NOT TO SCALE

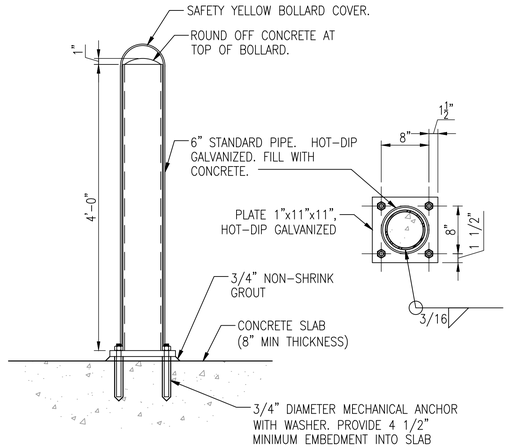

D S00.05 TYPICAL INTERIOR BOLLARD

NOT TO SCALE

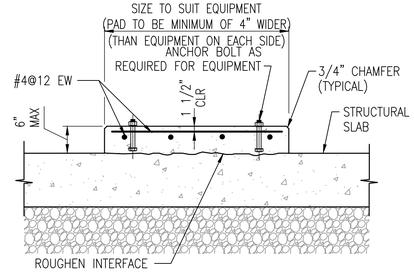

E S00.05 TYPICAL INTERIOR EQUIPMENT SUPPORT/HOUSEKEEPING PAD

NOT TO SCALE

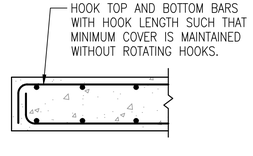

F S00.05 TYPICAL SLAB REINFORCEMENT AT FREE EDGE

NOT TO SCALE

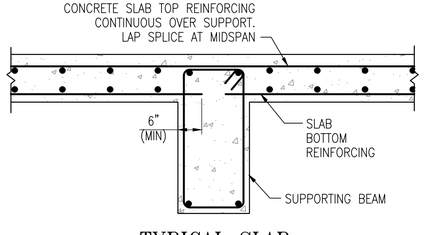

G S00.05 TYPICAL SLAB REINFORCEMENT AT INTERIOR BEAMS

NOT TO SCALE

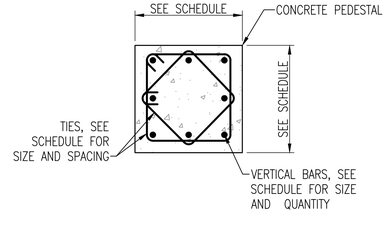

H S00.05 TYPICAL CONCRETE PEDESTAL

NOT TO SCALE

REVISIONS		

CLIENT INFORMATION

SUSSEX COUNTY, DE
ENGINEERING
DEPARTMENT

INLAND BAYS RWF
PHASE #2 EXPANSION:
CONTRACT S19-10

KEY PLAN

GRAPHIC SCALES

SIGNATURE

JESSE A. ENDY
No. 19271
12/7/18
DELAWARE
PROFESSIONAL ENGINEER

Whitman, Requardt & Associates, LLP
801 South Caroline Street, Baltimore, Maryland 21231

TYPICAL STRUCTURAL DETAILS

DRAWING NO.

S00.05

SCALE: NONE		
DATE: DEC. 2018	SHEET 67 OF 217	
DES: WAY	DRAWN: CJS	CHECK: BAE

PLOT DATE: 12/7/2018 12:57 PM PAGE SETUP: WRA-PDF (36X24) PLOT STYLE: WRA_2006.CTB PAPER SIZE:ARCH FULL BLEED D (36.00 X 24.00 INCHES)
N:\14256-026\CADD\14256026S00-05.dwg

CMU TENSION LAP SPLICE

BAR SIZE	10" CMU			12" CMU			le
	A	B	C	A	B	C	
#4	21"	34"	21"	21"	34"	21"	7
#5	26"	53"	27"	26"	53"	27"	9
#6	31"	74"	40"	31"	74"	50"	10
#7	46"	101"	67"	46"	101"	67"	12

NOTES:
1. A= ONE BAR PLACED AT THE CENTER OF MASONRY UNIT CELL FOR VERTICAL WALL.
2. B= TWO BARS IN A MASONRY UNIT CELL FOR VERTICAL WALL WITH 1 1/2" MINIMUM COVER FOR 8" CMU AND 2" MINIMUM COVER FOR 12" CMU. COVER.
3. C= REINFORCEMENT IN LINTEL BLOCK WITH MINIMUM 3" COVER.
4. BAR SPLICED BY NON-CONTACT LAP SPLICES SHALL NOT BE SPACED FARTHER THAN ONE-FIFTH THE REQUIRED LENGTH OF LAP (ID) NOR MORE THAN 8".
5. MINIMUM GROUT BETWEEN THE REINFORCEMENT AND MASONRY UNIT SHALL NOT BE LESS THAN 1/2".
6. REFER TO CONCRETE TENSION LAP SPLICE AND STANDARD HOOK LENGTH FOR STANDARD HOOK LENGTH AND DIAMTER. MINIMUM BEND DIAMETER = 6 db.
7. F'm = 1,500 psi
8. GRADE 60 REINFORCEMENT BAR.

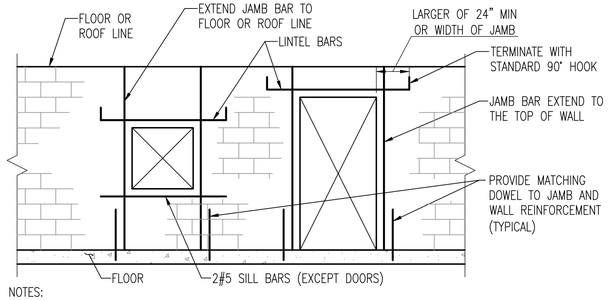

NOTES:
1. GROUT LINTEL BLOCKS SOLID FOR 24" MINIMUM OR WIDTH OF JAMB BEYOND OPENING.
2. NOT ALL BOND BEAM REINFORCEMENT AND VERTICAL WALL REINFORCEMENT SHOWN FOR CLARITY.
3. SEE "TYPICAL CMU LINTELS DETAIL" AND "CMU JAMB DETAIL" ON THIS DRAWING FOR REINFORCEMENT AROUND WALL OPENINGS.
4. REFER TO SPECIFICATION SECTION 04200 FOR HORIZONTAL JOINT REINFORCEMENT REQUIREMENTS.
5. REFER TO ARCHITECTURAL SHEETS FOR DESIGN CLEARANCE REQUIREMENTS AT OPENINGS IN CMU WALLS. REFER TO OTHER DISCIPLINE SHEETS, FOR PIPE, DUCTWORK, AND OTHER UTILITY PENETRATIONS.
6. REFER TO CMU WALL PENETRATIONS DETAIL FOR MORE INFORMATION.

A S00.06 CMU WALL OPENING REINFORCEMENT DETAIL
NOT TO SCALE

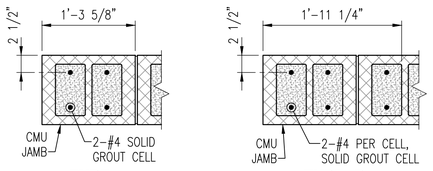

NOTES:
1. TYPE A FOR USE WITH OPENINGS UP TO 5'-4" WIDE.
2. TYPE B FOR ALL OTHER OPENINGS

F S00.06 CMU JAMB DETAIL
NOT TO SCALE

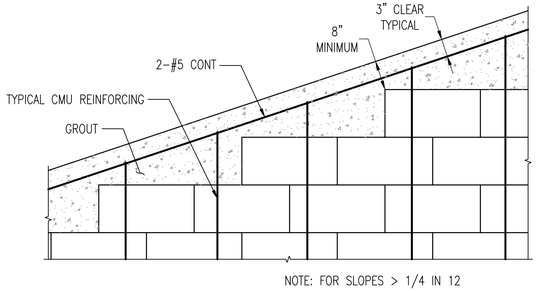

NOTE: FOR SLOPES > 1/4 IN 12

J S00.06 CMU BOND BEAM (SLOPE) > 1/4 IN 12
NOT TO SCALE

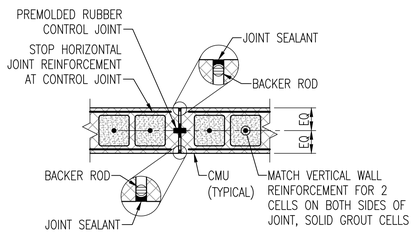

NOTE: IF CONTROL JOINT REINFORCEMENT CONTRADICTS WITH JAMB REINFORCING REQUIREMENTS USE JAMB REINFORCEMENT PER CMU JAMB DETAIL.

B S00.06 CMU CONTROL JOINT
NOT TO SCALE

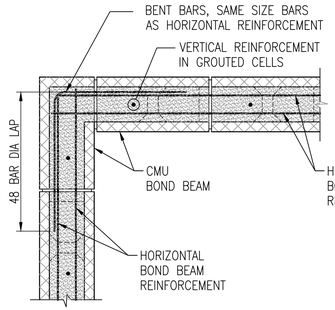

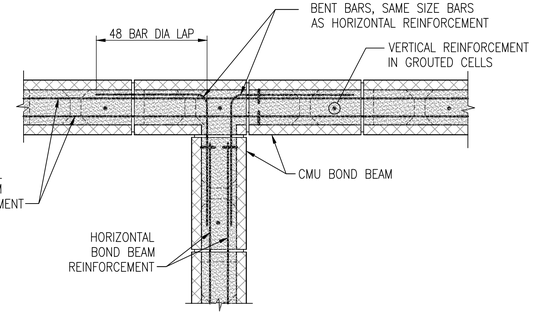

C S00.06 BOND BEAM CORNER
NOT TO SCALE

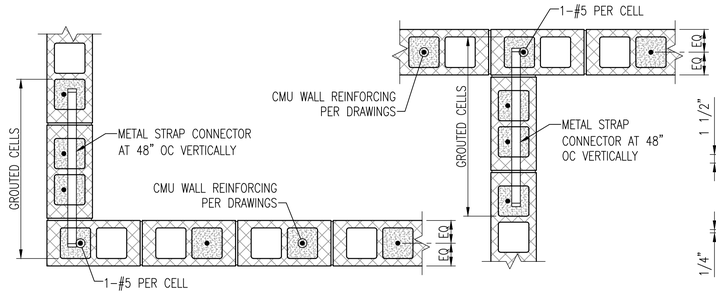

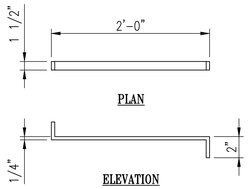

METAL STRAP CONNECTOR DETAILS

NOTE: VERTICAL WALL REINFORCING IS #5@48 UNLESS OTHERWISE NOTED (UON).

D S00.06 CMU WALL REINFORCING DETAILS AT CORNERS AND INTERSECTION
NOT TO SCALE

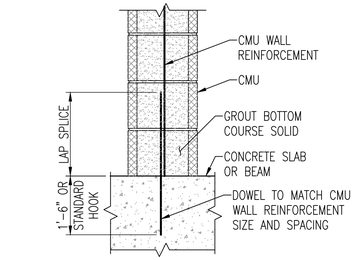

E S00.06 BASE OF CMU WALL DETAIL
NOT TO SCALE

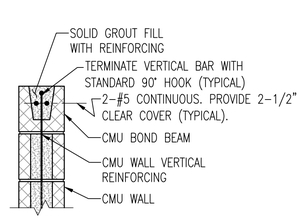

G S00.06 CMU BOND BEAM DETAIL
NOT TO SCALE

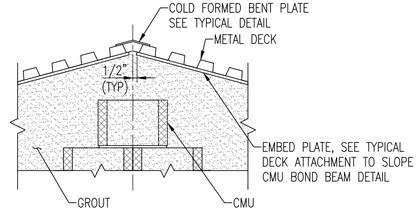

H S00.06 ROOF SUPPORTS AT RIDGE DETAIL
NOT TO SCALE

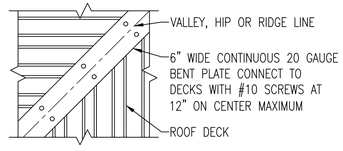

BENT PLATE AT HIPS, VALLEYS, AND RIDGES DETAIL

I S00.06
NOT TO SCALE

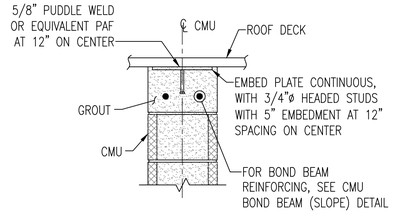

NOTES:
FOR 10" CMU, PROVIDE 1/2"x8" CONTINUOUS EMBED PLATE.
FOR 12" CMU, PROVIDE 1/2"x10" CONTINUOUS EMBED PLATE.

DECK AT ATTACHMENT TO SLOPED CMU BOND BEAM DETAIL

K S00.06
NOT TO SCALE

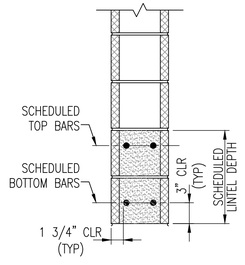

LENGTH (FT)	DEPTH (IN)	BOTTOM BARS	TOP BARS
0-6	8	2-#5	-
>6	16	2-#6	2-#5

NOTES:
PROVIDE 8" MINIMUM END BEARING FOR LINTELS UP TO 8'-0".
PROVIDE 16" END BEARING FOR LARGER SPANS.

L S00.06 TYPICAL CMU LINTELS DETAIL
NOT TO SCALE

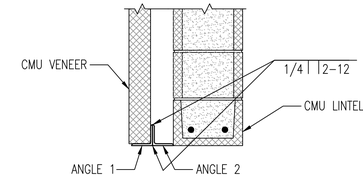

NOTES:
1. LOOSE LINTEL MUST BE GALVANIZED.
2. PROVIDE LINTEL SIZE WITH MINIMUM BEARING LENGTH INDICATED BELOW.

OPENING WIDTH	ANGLE 1	ANGLE 2	MIN BEARING
UP TO 4'-0"	L3 1/2x3 1/2x5/16	L3 1/2x3 1/2x5/16	6"
4'-1" TO 10'-0"	L5x3 1/2x5/16 (LLV)	L5x3 1/2x5/16 (LLV)	8"

M S00.06 TYPICAL LOOSE LINTEL AT CMU WALL DETAIL
NOT TO SCALE

REVISIONS

CLIENT INFORMATION

SUSSEX COUNTY, DE ENGINEERING DEPARTMENT

INLAND BAYS RWF PHASE #2 EXPANSION: CONTRACT S19-10

KEY PLAN

GRAPHIC SCALES

SIGNATURE

BRUCE A. ENGLE 19271 DELAWARE PROFESSIONAL ENGINEER No. 19271 12/7/18

Whitman, Requardt & Associates, LLP
801 South Caroline Street, Baltimore, Maryland 21231

TYPICAL STRUCTURAL DETAILS

DRAWING NO.

S00.06

SCALE: NONE

DATE: DEC. 2018 | SHEET 68 OF 217

DES: WAY | DRAWN: MKS | CHECK: BAE

PLOT DATE: 12/7/2018 10:36: PM PAGE SETUP: WRA-PDF CK6243 PLOT STYLE: WRA_2006CTB PAPER SIZE:ARCH FULL BLEED D (36.00 X 24.00 INCHES)
N:\14256-026\CADD\14256026S00-06.dwg

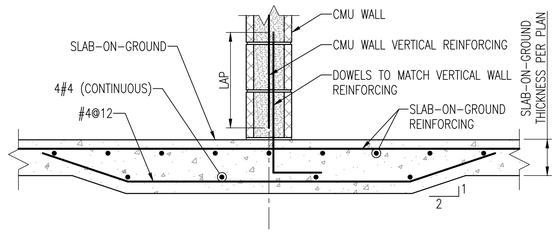

TYPICAL THICKENED SLAB-ON-GROUND

A S00.07 — NOT TO SCALE

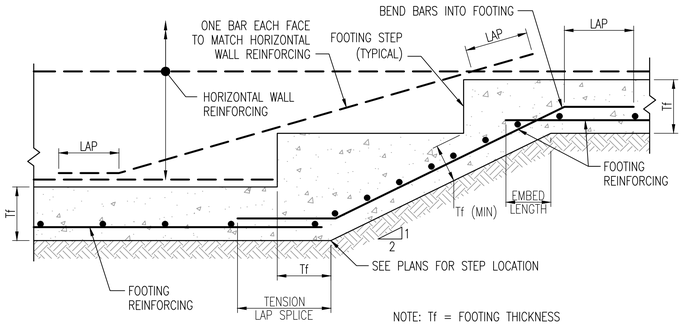

TYPICAL STEPPED WALL FOOTING

B S00.07 — NOT TO SCALE

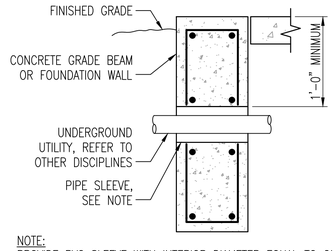

NOTE:
PROVIDE PVC SLEEVE WITH INTERIOR DIAMETER EQUAL TO OUTSIDE DIAMETER OF PIPE OR CONDUIT + 1" MINIMUM CENTER PIPE OR CONDUIT IN PVC SLEEVE. ARRANGE VERTICAL REINFORCING TO MAINTAIN 2" CLEAR COVER AT SLEEVE. DO NOT CONFLICT WITH TOP OR BOTTOM TENSION REINFORCING. COORDINATE LOCATION OF SLEEVES WITH OTHER DISCIPLINES.

TYPICAL UTILITY SLEEVE THROUGH GRADE BEAM OR FOUNDATION WALL

C S00.07 — NOT TO SCALE

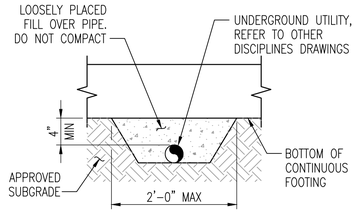

TYPICAL UTILITY UNDER FOUNDATION

D S00.07 — NOT TO SCALE

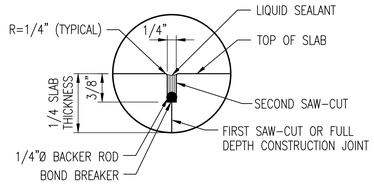

TYPICAL SAW-CUT JOINT DETAIL

E S00.07 — NOT TO SCALE

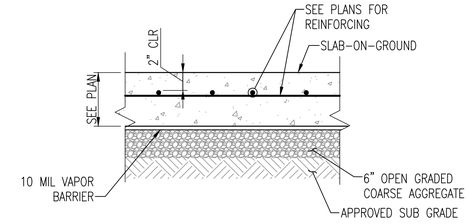

TYPICAL INTERIOR SLAB-ON-GROUND

F S00.07 — NOT TO SCALE

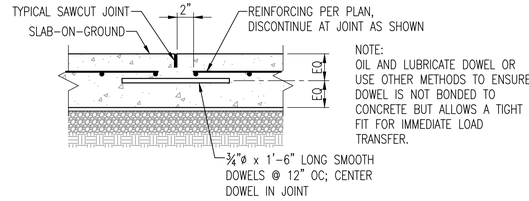

NOTE:
OIL AND LUBRICATE DOWEL OR USE OTHER METHODS TO ENSURE DOWEL IS NOT BONDED TO CONCRETE BUT ALLOWS A TIGHT FIT FOR IMMEDIATE LOAD TRANSFER.

CONTRACTION JOINT IN SLAB-ON-GROUND

G S00.07 — NOT TO SCALE

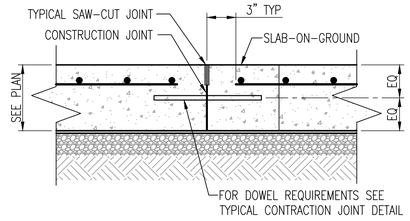

TYPICAL SLAB-ON-GROUND CONSTRUCTION JOINT DETAIL

H S00.07 — NOT TO SCALE

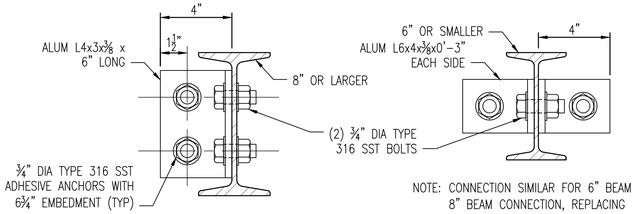

NOTE: CONNECTION SIMILAR FOR 6" BEAM TO 8" BEAM CONNECTION, REPLACING ADHESIVE ANCHORS WITH ¾" BOLTS.

8" AND LARGER — 6" AND SMALLER

TYPICAL ALUMINUM BEAM CONNECTION TO WALL

I S00.07 — NOT TO SCALE

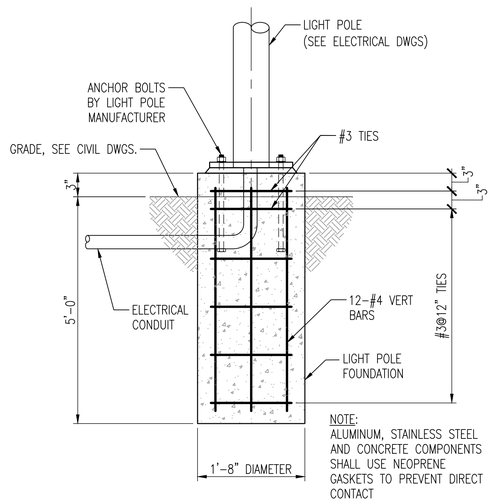

NOTE:
ALUMINUM, STAINLESS STEEL AND CONCRETE COMPONENTS SHALL USE NEOPRENE GASKETS TO PREVENT DIRECT CONTACT

TYPICAL LIGHT POLE FOUNDATION DETAIL

M S00.07 — NOT TO SCALE

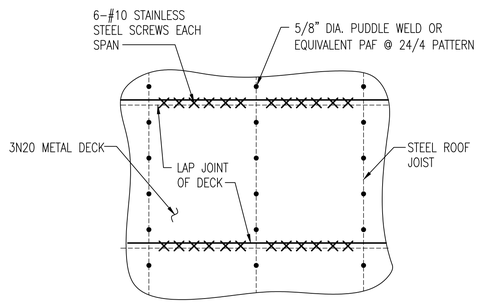

TYPICAL ROOF DECK FASTENER PATTERN

J S00.07 — NOT TO SCALE

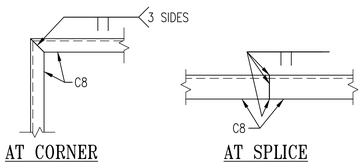

AT CORNER — AT SPLICE

DECK EDGE CHANNEL DETAIL

K S00.07 — NOT TO SCALE

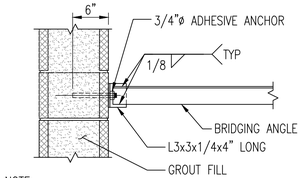

NOTE:
SECURE ALL BRIDGING TO MASONRY WALLS. IF NO WALLS ARE PRESENT PROVIDE DIAGONAL BRIDGING AS REQUIRED BY SJI.

TYPICAL JOIST BRIDGING CONNECTION TO MASONRY

L S00.07 — NOT TO SCALE

REVISIONS		

CLIENT INFORMATION

SUSSEX COUNTY, DE
ENGINEERING
DEPARTMENT

INLAND BAYS RWF
PHASE #2 EXPANSION:
CONTRACT S19-10

KEY PLAN

GRAPHIC SCALES

SIGNATURE

BRUCE A. ENGLISH
LICENSED
No. 19271
12/7/18
PROFESSIONAL ENGINEER
DELAWARE

Whitman, Requardt & Associates, LLP
801 South Caroline Street, Baltimore, Maryland 21231

TYPICAL STRUCTURAL DETAILS

DRAWING NO.

S00.07

SCALE: NONE		
DATE: DEC. 2018		SHEET 69 OF 217
DES: WAY	DRAWN: MKS	CHECK: BAE

PLOT DATE: 12/7/2018 1:45:47 PM PAGE SETUP: WRA-PDF (36X24) PLOT STYLE: WRA_2006.CTB PAPER SIZE:ARCH FULL BLEED D (36.00 X 24.00 INCHES)
N:\14256-126\CADD\14256028S90-07.dwg

GENERAL SHEET NOTES

1. SEE S00.01 AND S00.02 FOR GENERAL STRUCTURAL NOTES.
2. SEE S00.03 THROUGH S00.07 FOR TYPICAL STRUCTURAL DETAILS.
3. INDICATED MAT SLAB THICKNESS IS THE MINIMUM THICKNESS. PROVIDE BOTTOM OF MAT SLAB AT CONSTANT ELEVATION.
4. PROVIDE SHEET WATERPROOFING AT ALL EXTERIOR WALLS AND BLINDSIDE WATERPROOFING BENEATH MAT SLAB AND INTERMEDIATE SLAB.
5. SUBMIT CONSTRUCTION JOINT AND WATERSTOP LAYOUT PLANS FOR APPROVAL.
6. WALL REINFORCING NOT SHOWN FOR CLARITY. SEE SECTIONS.

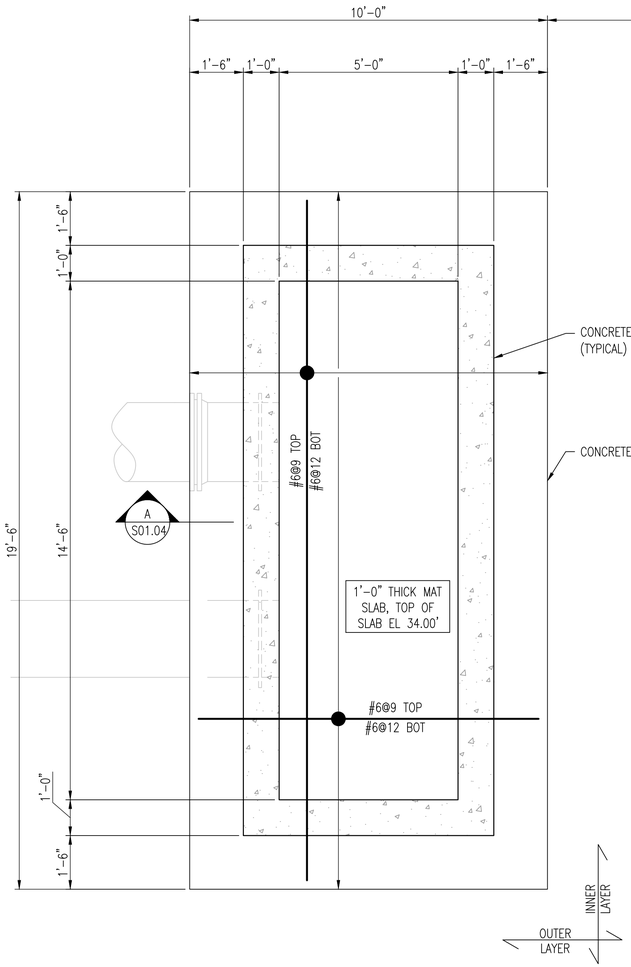

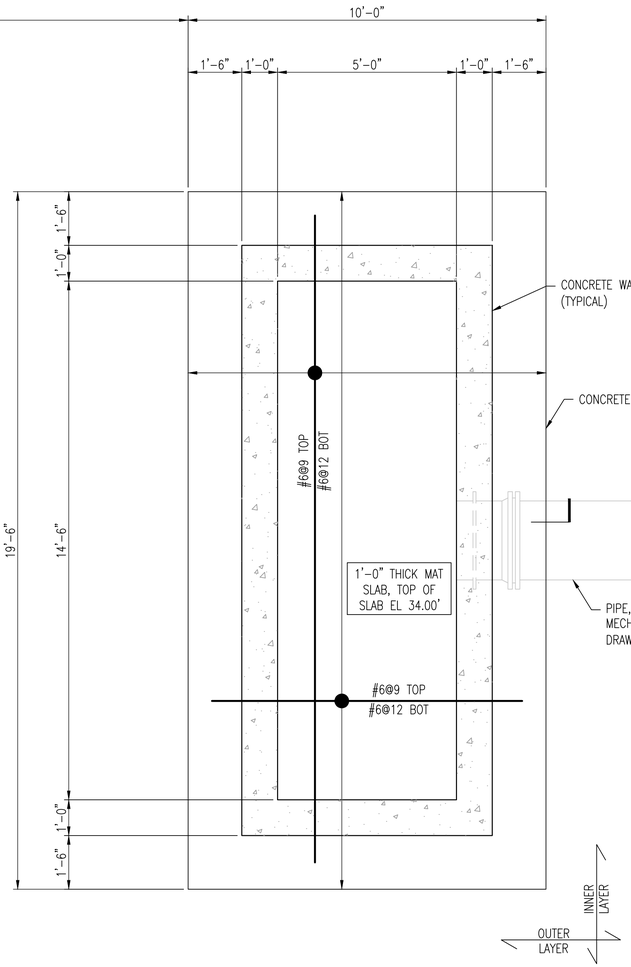

NORTH HEADWORKS FOUNDATION PLAN

SCALE: 1/2" = 1'-0"

REVISIONS

CLIENT INFORMATION

SUSSEX COUNTY, DE
ENGINEERING
DEPARTMENT

INLAND BAYS RWF
PHASE #2 EXPANSION:
CONTRACT S19-10

KEY PLAN

GRAPHIC SCALES

0 1' 2' 4'

SCALE: 1/2" = 1'-0"

SIGNATURE

BRUCE A. ESHLEMAN
No. 19271
12/7/18
DELAWARE
PROFESSIONAL ENGINEER

Whitman, Requardt & Associates, LLP
801 South Caroline Street, Baltimore, Maryland 21231

NORTH HEADWORKS
FOUNDATION PLAN

DRAWING NO.

S01.01

SCALE: 1/2" = 1'-0"		
DATE: DEC. 2018	SHEET 70 OF 217	
DES: BJK	DRAWN: CJS	CHECK: BAE

PLOT DATE: 12/7/2018 1:55:55 PM PAGE SETUP: WRA-PSF C36X24) PLOT STYLE: WRA_2006.CTB PAPER SIZE:ARCH FULL BLEED D (36.00 X 24.00 INCHES)
FILENAME: N:\14256-028\CADD\14256028S01-01.DWG
N:\14256-028\CADD\14256028S01-01.dwg

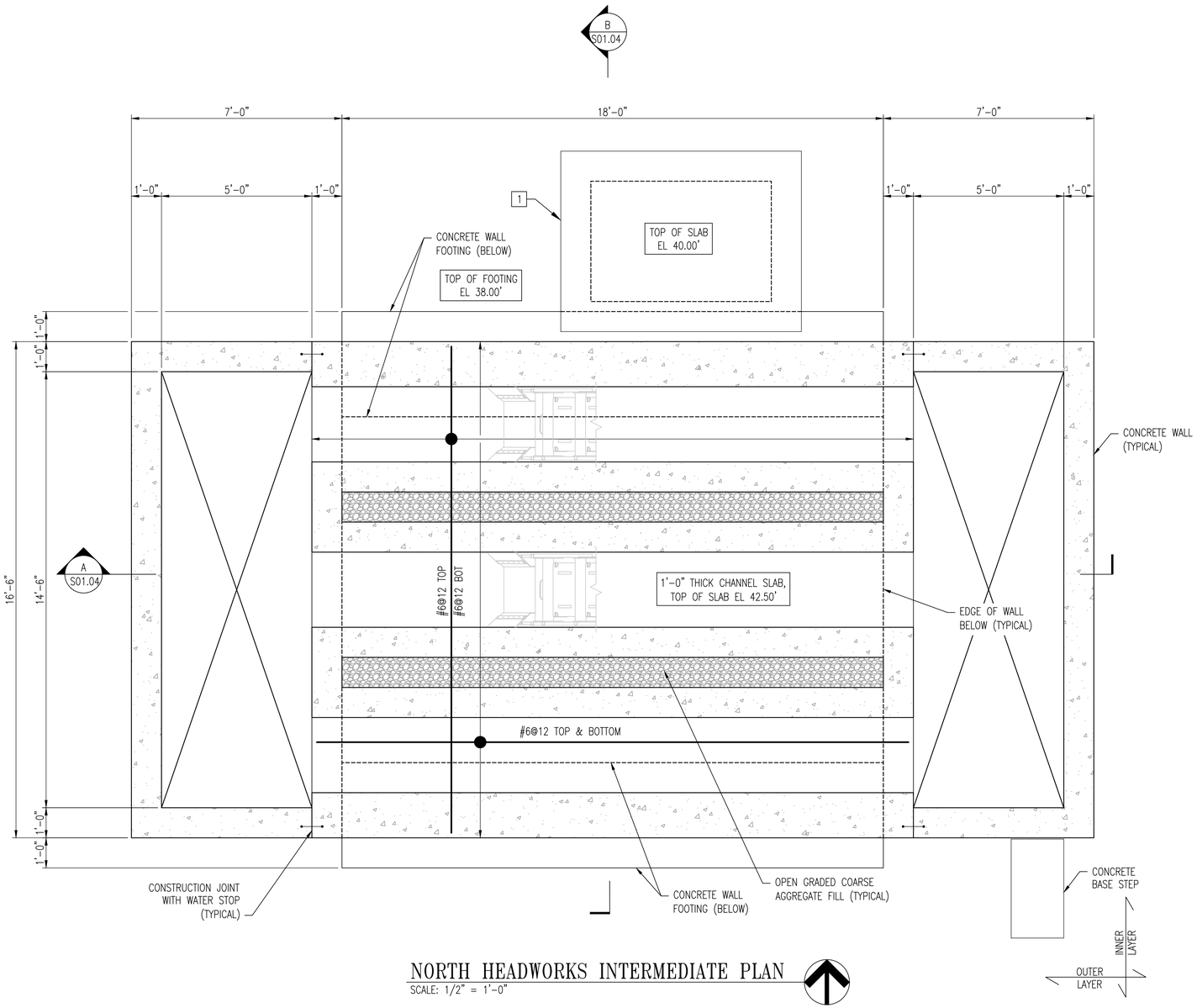

NORTH HEADWORKS INTERMEDIATE PLAN

SCALE: 1/2" = 1'-0"

GENERAL SHEET NOTES

1. SEE S00.01 AND S00.02 FOR GENERAL STRUCTURAL NOTES.
2. SEE S00.03 THROUGH S00.07 FOR TYPICAL STRUCTURAL DETAILS.
3. SUBMIT CONSTRUCTION JOINT AND WATERSTOP LAYOUT PLANS FOR APPROVAL.
4. WALL REINFORCING NOT SHOWN FOR CLARITY. SEE SECTIONS.

SHEET KEYNOTES

1 EXTERIOR EQUIPMENT PAD FOR 2 CUBIC YARD DUMPSTER. COORDINATE SIZE AND FINAL LOCATION WITH MECHANICAL SHEETS AND APPROVED EQUIPMENT.

REVISIONS

CLIENT INFORMATION

SUSSEX COUNTY, DE
ENGINEERING
DEPARTMENT

INLAND BAYS RWF
PHASE #2 EXPANSION:
CONTRACT S19-10

KEY PLAN

GRAPHIC SCALES

0 1' 2' 4'
SCALE: 1/2" = 1'-0"

SIGNATURE

BRUCE A. ENGLAR
No. 19271
12/7/18
REGISTERED PROFESSIONAL ENGINEER

Whitman, Requardt & Associates, LLP
801 South Caroline Street, Baltimore, Maryland 21231

NORTH HEADWORKS
INTERMEDIATE PLAN

DRAWING NO.

S01.02

SCALE: 1/2" = 1'-0"		
DATE: DEC. 2018	SHEET 71 OF 217	
DES: BJK	DRAWN: CJS	CHECK: BAE

PLOT DATE: 12/7/2018 11:05 PM PAGE SETUP: WRA-PDF (36X24) PLOT STYLE: WRA_2006.CTB PAPER SIZE:ARCH FULL BLEED D (36.00 X 24.00 INCHES)

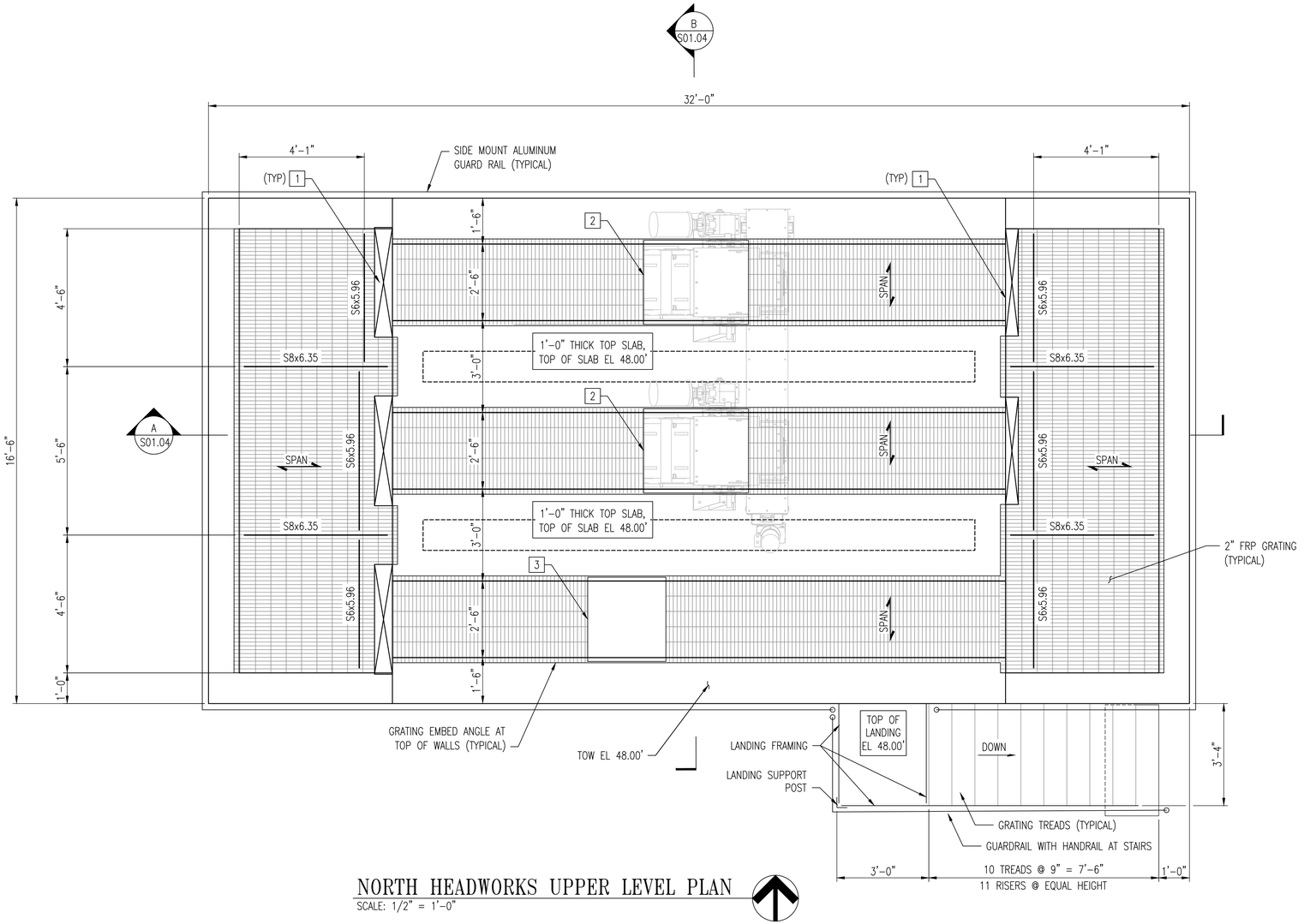

NORTH HEADWORKS UPPER LEVEL PLAN

SCALE: 1/2" = 1'-0"

GENERAL SHEET NOTES

1. SEE S00.01 AND S00.02 FOR GENERAL STRUCTURAL NOTES.
2. SEE S00.03 THROUGH S00.07 FOR TYPICAL STRUCTURAL DETAILS.
3. METAL STAIR FRAMING, LANDING GRATING, CONNECTIONS, GRATING TREADS, AND PIPE AND TUBE RAILING ARE DELEGATED DESIGN ITEMS.
4. MECHANICAL BAR SCREENS AND SCREW CONVEYORS SHALL BE SUPPORTED OFF OF CONCRETE WALLS AND SLABS ONLY AND ARE NOT ALLOWED TO BEAR ON GRATING SURFACES.
5. PROVIDE 2" FRP GRATING WITH THE MINIMUM PROPERTIES:
   a. AREA (A): 4.429 IN^2/FT
   b. SECTION MODULUS (S_x): 2.40 IN^3/FT
   c. MOMENT OF INTERIA (I_x): 2.40 IN^4/FT
   d. MODULUS OF ELASTICITY (E): 4.47×10^6 PSI.
   e. PROVIDE ALUMINUM OXIDE GRIT TOP SURFACE.

SHEET KEYNOTES

1. OPENING IN GRATING FOR WEIR AND SLIDE GATES. COORDINATE WITH MECHANICAL DRAWINGS.
2. OPENING IN GRATING FOR MECHANICAL BAR SCREEN. COORDINATE WITH MECHANICAL DRAWINGS.
3. OPENING IN GRATING FOR BAR RACK. COORDINATE WITH MECHANICAL DRAWINGS.

LEGEND

SPAN — INDICATES SPAN DIRECTION OF GRATING.

REVISIONS

CLIENT INFORMATION

SUSSEX COUNTY, DE
ENGINEERING
DEPARTMENT

INLAND BAYS RWF
PHASE #2 EXPANSION:
CONTRACT S19-10

KEY PLAN

GRAPHIC SCALES

0 1' 2' 4'

SCALE: 1/2" = 1'-0"

SIGNATURE

BRUCE A. ENGLISH
LICENSED
No. 19271
12/7/18
DELAWARE
PROFESSIONAL ENGINEER

WRA
Whitman, Requardt & Associates, LLP
801 South Caroline Street, Baltimore, Maryland 21231

NORTH HEADWORKS
UPPER LEVEL PLAN

DRAWING NO.

S01.03

SCALE: 1/2" = 1'-0"		
DATE: DEC. 2018	SHEET 72 OF 217	
DES: BJK	DRAWN: CJS	CHECK: BAE

PLOT DATE: 12/7/2018 1:16:45 PM PAGE SETUP: WRA-PDF (36X24) PLOT STYLE: WRA_2006.CTB PAPER SIZEARCH FULL BLEED D (36.00 X 24.00 INCHES)

FILENAME: N:\14256-026\CADD\14256026S01-03.DWG
N:\14256-026\CADD\14256026S01-03.dwg

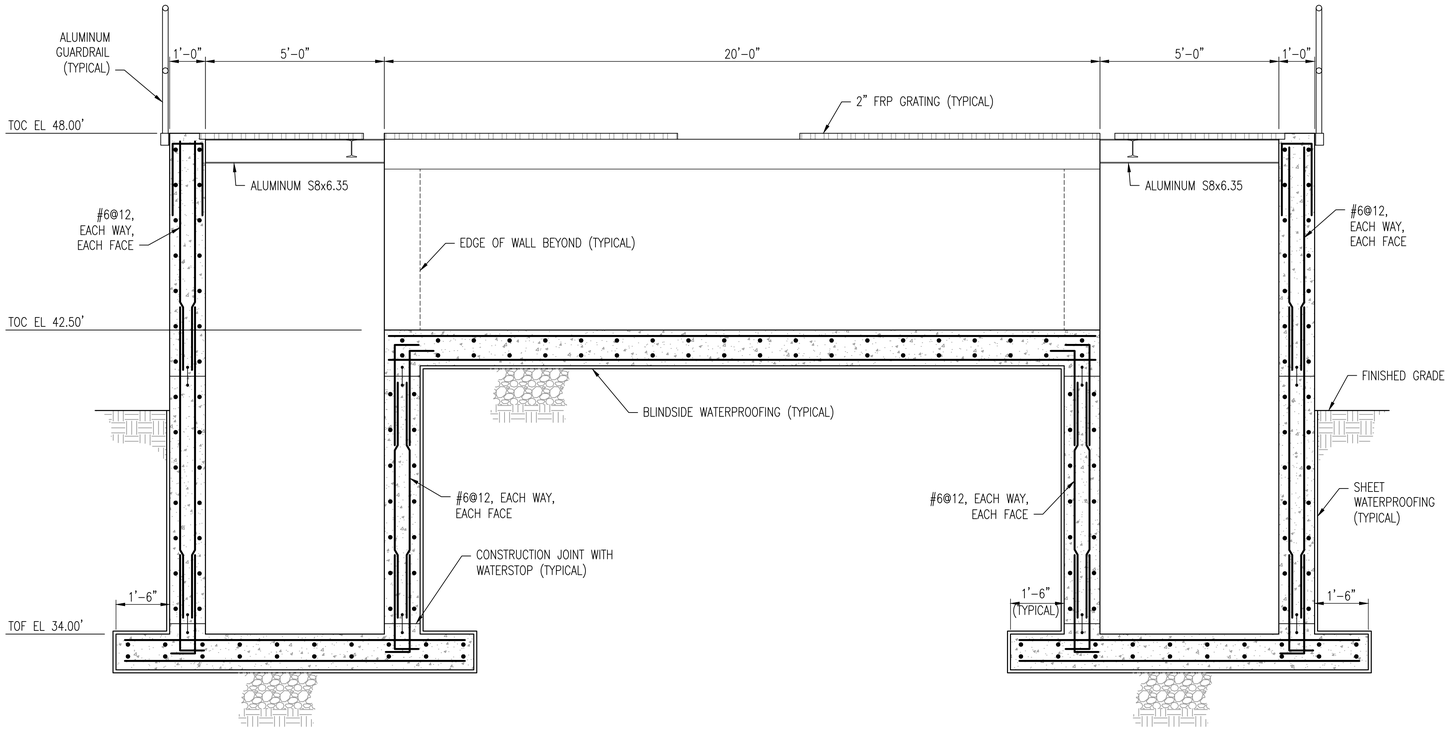

A S01.04 **SECTION**
SCALE: 1/2" = 1'-0"
REF: S01.01, S01.02, S01.03

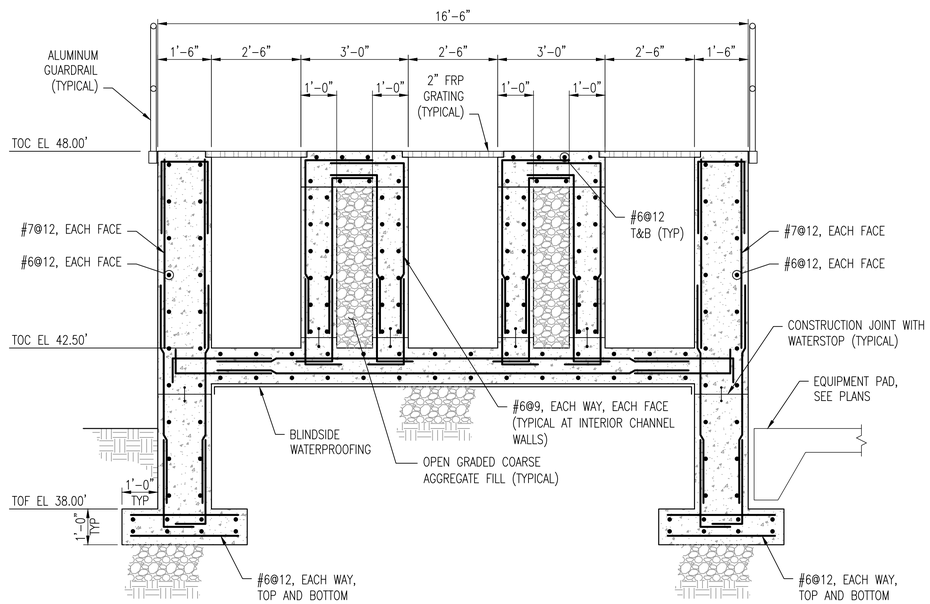

B S01.04 **SECTION**
SCALE: 1/2" = 1'-0"
REF: S01.02, S01.03

REVISIONS		

CLIENT INFORMATION

SUSSEX COUNTY, DE
ENGINEERING
DEPARTMENT

INLAND BAYS RWF
PHASE #2 EXPANSION:
CONTRACT S19-10

KEY PLAN

GRAPHIC SCALES

0 1' 2' 4'
SCALE: 1/2" = 1'-0"

SIGNATURE

BRUCE A. ENGLE
LICENSED
No. 19271
12/7/18
DELAWARE
PROFESSIONAL ENGINEER

Whitman, Requardt & Associates, LLP
801 South Caroline Street, Baltimore, Maryland 21231

NORTH HEADWORKS
SECTIONS

DRAWING NO.

S01.04

SCALE: 1/2" = 1'-0"		
DATE: DEC. 2018		SHEET 73 OF 217
DES: BJK	DRAWN: MKS	CHECK: BAE

PLOT DATED: 12/7/2018 1:46:25 PM PAGE SETUP: WRA-PDF C36X24) PLOT STYLE: WRA_2006.CTB PAPER SIZE:ARCH FULL BLEED D (36.00 X 24.00 INCHES)
FILENAME: W:\14256-028\CADD\14256028S01-04.DWG
X:\14256-028\CADD\14256028S01-04.dwg

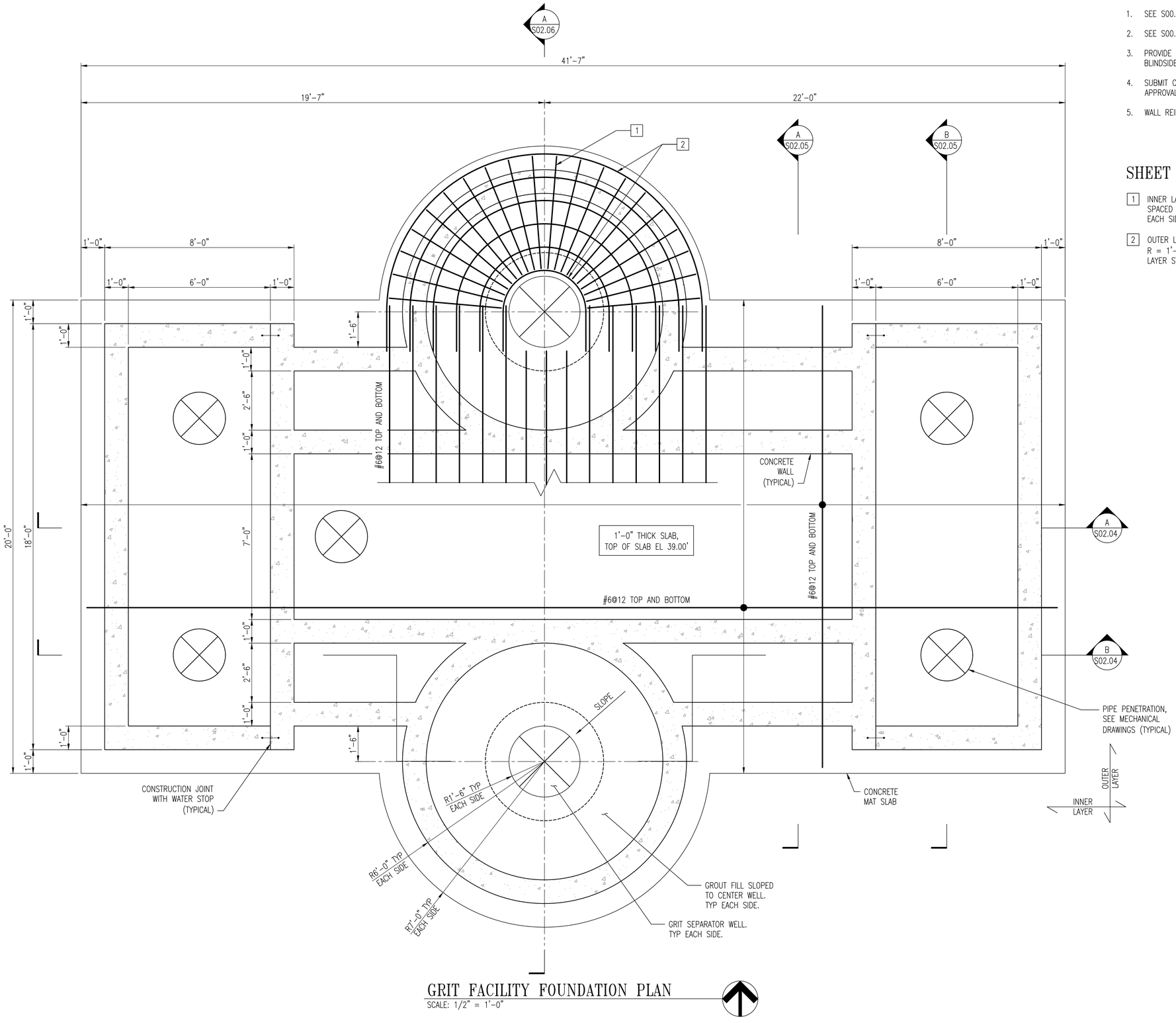

GRIT FACILITY FOUNDATION PLAN

SCALE: 1/2" = 1'-0"

GENERAL SHEET NOTES

1. SEE S00.01 AND S00.02 FOR GENERAL STRUCTURAL NOTES.
2. SEE S00.03 THROUGH S00.07 FOR TYPICAL STRUCTURAL DETAILS.
3. PROVIDE SHEET WATERPROOFING AT ALL EXTERIOR WALLS AND BLINDSIDE WATERPROOFING BENEATH MAT SLAB.
4. SUBMIT CONSTRUCTION JOINT AND WATERSTOP LAYOUT PLANS FOR APPROVAL.
5. WALL REINFORCING NOT SHOWN FOR CLARITY. SEE SECTIONS.

SHEET KEYNOTES

1 INNER LAYER RADIAL STEEL 20-#6 TOP AND BOTTOM, EQUALLY SPACED IN HALF CIRCULAR PROJECTION OF MAT SLAB, TYPICAL EACH SIDE.

2 OUTER LAYER, RING STEEL 6-#6 EQ SPACED, TOP AND BOTTOM, R = 1'-9" TO R = 6'-9", TYPICAL EACH SIDE. LAP WITH OUTER LAYER STEEL IN REMAINDER OF MAT SLAB.

REVISIONS

CLIENT INFORMATION

SUSSEX COUNTY, DE
ENGINEERING
DEPARTMENT

INLAND BAYS RWF
PHASE #2 EXPANSION:
CONTRACT S19-10

KEY PLAN

GRAPHIC SCALES

0 1' 2' 4'

SCALE: 1/2" = 1'-0"

SIGNATURE

BRICE A. ENSLEY
No. 19271
12/7/18
REGISTERED PROFESSIONAL ENGINEER

Whitman, Requardt & Associates, LLP
801 South Caroline Street, Baltimore, Maryland 21231

GRIT FACILITY
FOUNDATION PLAN

DRAWING NO.

S02.01

SCALE: 1/2" = 1'-0"		
DATE: DEC. 2018	SHEET 74 OF 217	
DES: BJK	DRAWN: CJS	CHECK: BAE

PLOT DATE: 12/7/2018 1:56:53 PM PAGE SETUP: WRA-PDF (36X24) PLOT STYLE: WRA_2006CTB PAPER SIZE:ARCH FULL BLEED D (36.00 X 24.00 INCHES)
FILENAME: N:\14256-026\CADD\14256026S02-01.DWG
N:\14256-026\CADD\14256026S02-01.dwg

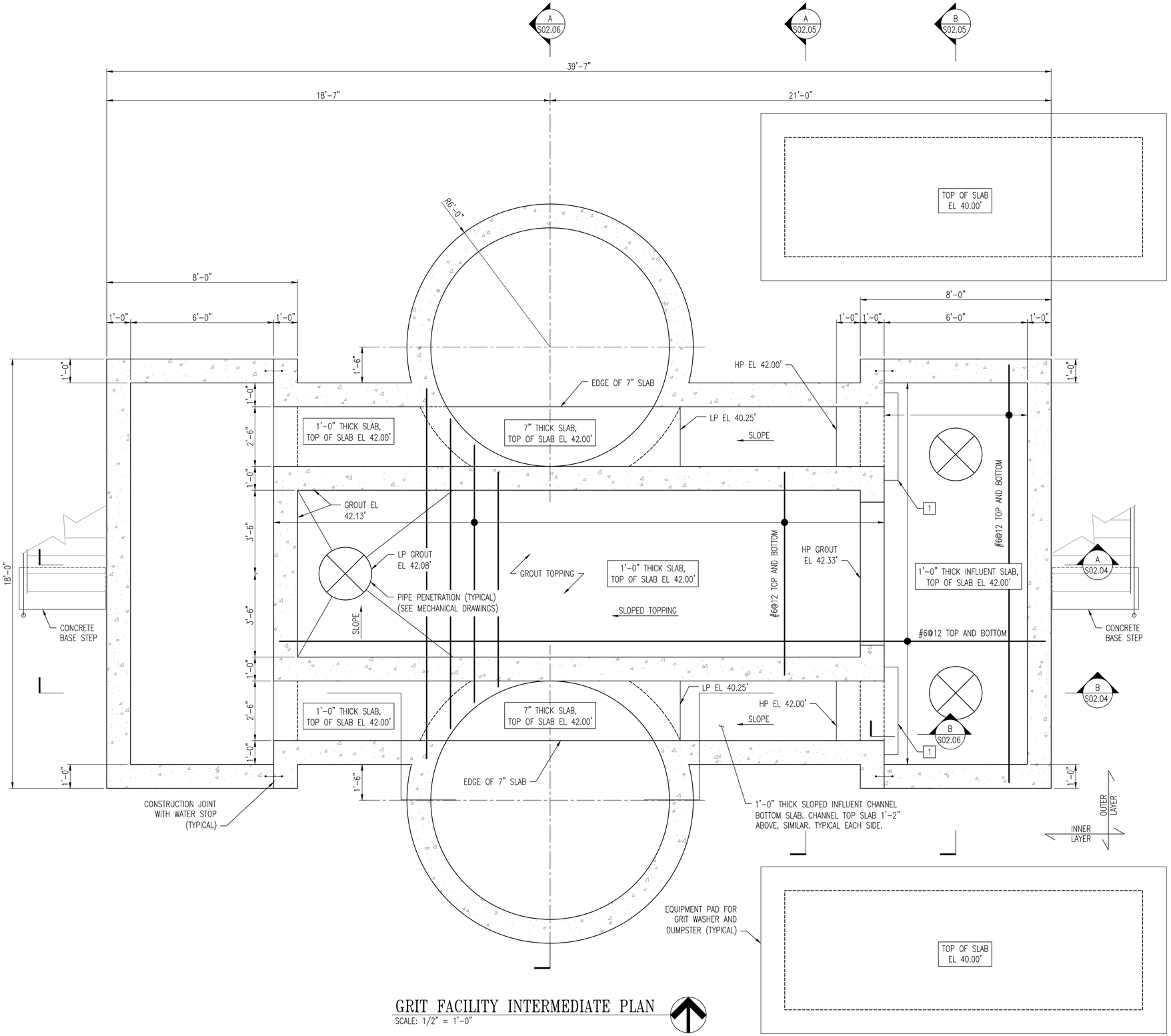

GRIT FACILITY INTERMEDIATE PLAN

SCALE: 1/2" = 1'-0"

GENERAL SHEET NOTES

1. SEE S00.01 AND S00.02 FOR GENERAL STRUCTURAL NOTES.
2. SEE S00.03 THROUGH S00.07 FOR TYPICAL STRUCTURAL DETAILS.
3. SUBMIT CONSTRUCTION JOINT AND WATERSTOP LAYOUT PLANS FOR APPROVAL.
4. WALL REINFORCING NOT SHOWN FOR CLARITY. SEE SECTIONS.

SHEET KEYNOTES

1 BLOCK-OUT IN SLAB FOR SLIDE GATE FLUSH BOTTOM INSTALLATION. STEP DOWN TOP LAYER OF REINFORCING. COORDINATE WITH MECHANICAL DRAWINGS AND APPROVED PRODUCT SUBMITTALS.

LEGEND

SLOPE — INDICATES SLOPE DIRECTION FROM HIGH TO LOW ELEVATION

REVISIONS

CLIENT INFORMATION

SUSSEX COUNTY, DE ENGINEERING DEPARTMENT

INLAND BAYS RWF PHASE #2 EXPANSION: CONTRACT S19-10

KEY PLAN

GRAPHIC SCALES

0 1' 2' 4'

SCALE: 1/2" = 1'-0"

SIGNATURE

BRUCE A. ENGLISH LICENSED No. 19271 DELAWARE PROFESSIONAL ENGINEER 12/7/18

Whitman, Requardt & Associates, LLP
801 South Caroline Street, Baltimore, Maryland 21231

GRIT FACILITY INTERMEDIATE PLAN

DRAWING NO.

S02.02

SCALE: 1/2" = 1'-0"		
DATE: DEC. 2018	SHEET 75 OF 217	
DES: BJK	DRAWN: CJS	CHECK: BAE

PLOT DATE: 12/7/2018 1:16:45 PM PAGE SETUP: WRA-PDF (36X24) PLOT STYLE: WRA_2006.CTB PAPER SIZE:ARCH FULL BLEED D (36.00 X 24.00 INCHES)

FILENAME: N:\14256-026\CADD\14256026S02-02.DWG
N:\14256-028\CADD\14256026S02-02.dwg

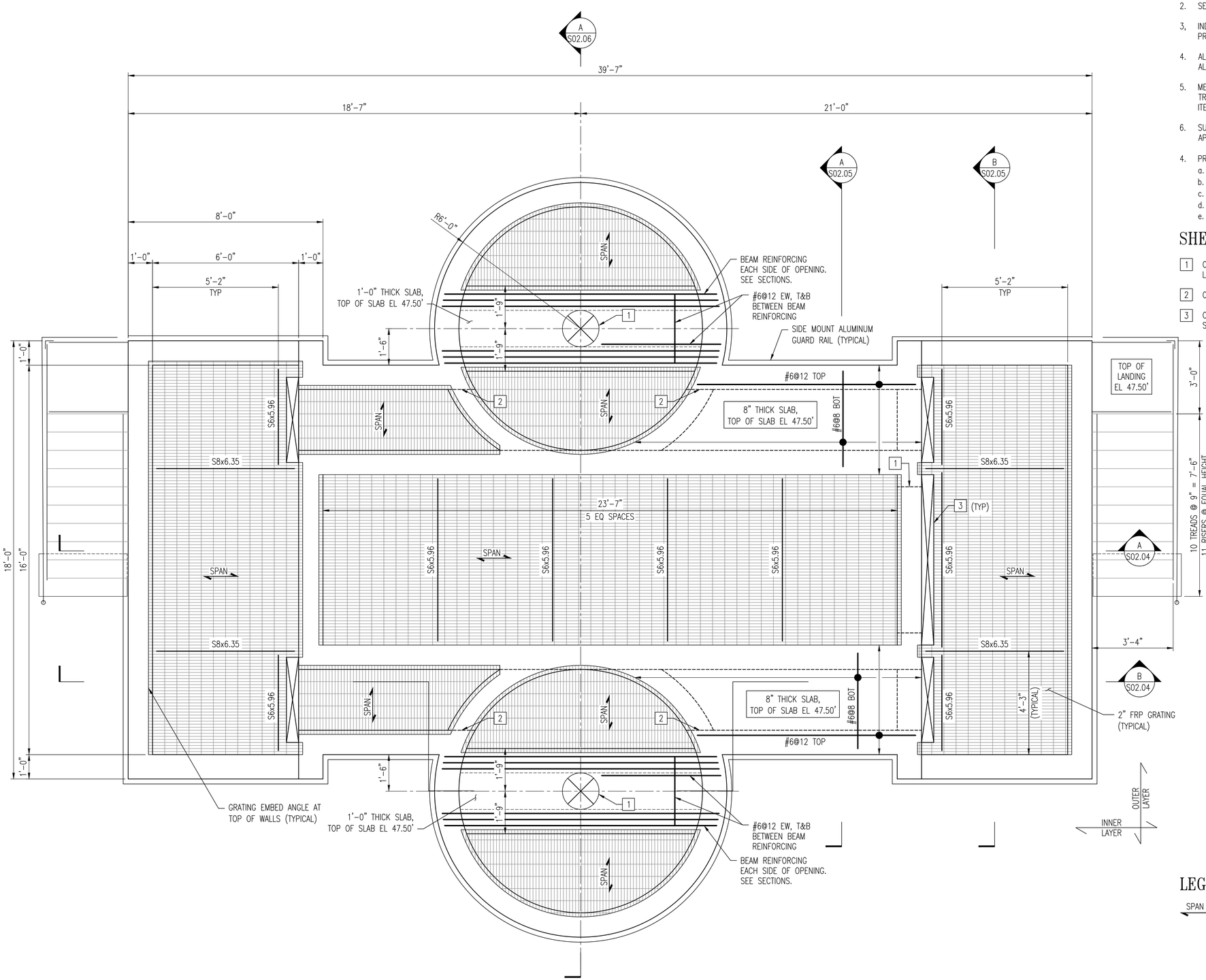

GRIT FACILITY UPPER LEVER PLAN

SCALE: 1/2" = 1'-0"

GENERAL SHEET NOTES

1. SEE S00.01 AND S00.02 FOR GENERAL STRUCTURAL NOTES.
2. SEE S00.03 THROUGH S00.07 FOR TYPICAL STRUCTURAL DETAILS.
3. INDICATED MAT SLAB THICKNESS IS THE MINIMUM THICKNESS. PROVIDE BOTTOM OF MAT SLAB AT CONSTANT ELEVATION.
4. ALL BEAMS, POSTS, GRATING AND GUARDRAILS SHOWN ARE ALUMINUM.
5. METAL STAIR FRAMING, LANDING GRATING, CONNECTIONS, GRATING TREADS, AND PIPE AND TUBE RAILING ARE DELEGATED DESIGN ITEMS.
6. SUBMIT CONSTRUCTION JOINT AND WATERSTOP LAYOUT PLANS FOR APPROVAL.
4. PROVIDE 2" FRP GRATING WITH THE MINIMUM PROPERTIES:
   a. AREA (A): 9.60 IN^2/FT
   b. SECTION MODULUS (S_x): 3.20 IN^3/FT
   c. MOMENT OF INTERIA (I_x): 3.20 IN^4/FT
   d. MODULUS OF ELASTICITY (E): 5.65x10^6 PSI.
   e. PROVIDE ALUMINUM OXIDE GRIT TOP SURFACE.

SHEET KEYNOTES

1. OVERFLOW OPENING IN WALL BELOW. COORDINATE SIZE AND LOCATION WITH APPROVED SUBMITTALS.
2. OPENING IN CIRCULAR WALL BELOW.
3. OPENING IN GRATING FOR PROCESS EQUIPMENT. COORDINATE SIZE AND LOCATION WITH APPROVED SUBMITTALS.

LEGEND

SPAN — INDICATES SPAN DIRECTION OF GRATING.

REVISIONS

CLIENT INFORMATION

SUSSEX COUNTY, DE
ENGINEERING
DEPARTMENT

INLAND BAYS RWF
PHASE #2 EXPANSION:
CONTRACT S19-10

KEY PLAN

GRAPHIC SCALES

0 1' 2' 4'

SCALE: 1/2" = 1'-0"

SIGNATURE

BRUCE A. ENIS
DELAWARE
No. 19271
12/7/18
PROFESSIONAL ENGINEER

Whitman, Requardt & Associates, LLP
801 South Caroline Street, Baltimore, Maryland 21231

GRIT FACILITY
UPPER LEVEL PLAN

DRAWING NO.

S02.03

SCALE: 1/2" = 1'-0"		
DATE: DEC. 2018		SHEET 76 OF 217
DES: BJK	DRAWN: BJK	CHECK: BAE

PLOT DATE: 12/7/2018 1:56:55 PM PAGE SETUP: WRA-PSF (36X24) PLOT STYLE: WRA_2006.CTB PAPER SIZE:ARCH FULL BLEED D (36.00 X 24.00 INCHES)
FILENAME: N:\14256-026\CADD\14256026S02-03.dwg
N:\14256-026\CADD\14256026S02-03.dwg

SHEET KEYNOTES

1 OPENING FOR PROCESS EQUIPMENT. COORDINATE SIZE AND LOCATION WITH APPROVED SUBMITTALS.

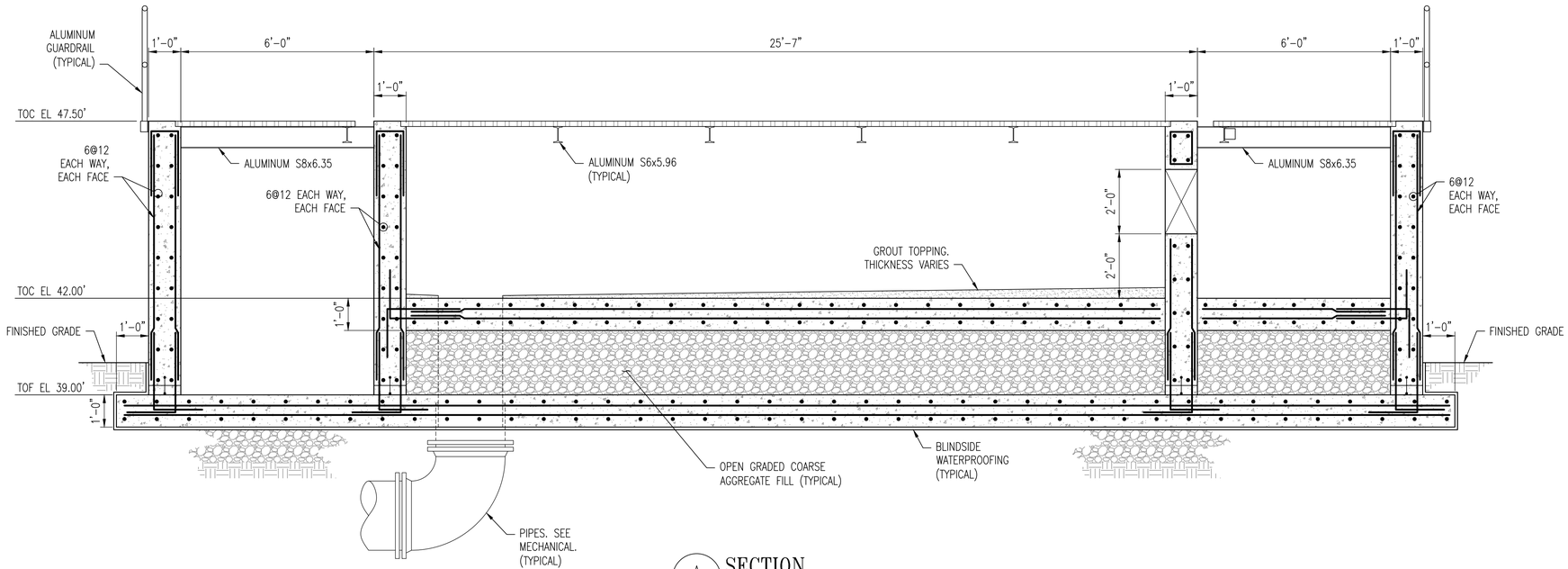

A S02.04 SECTION
SCALE: 1/2" = 1'-0"
REF: S02.01, S02.02, S02.03

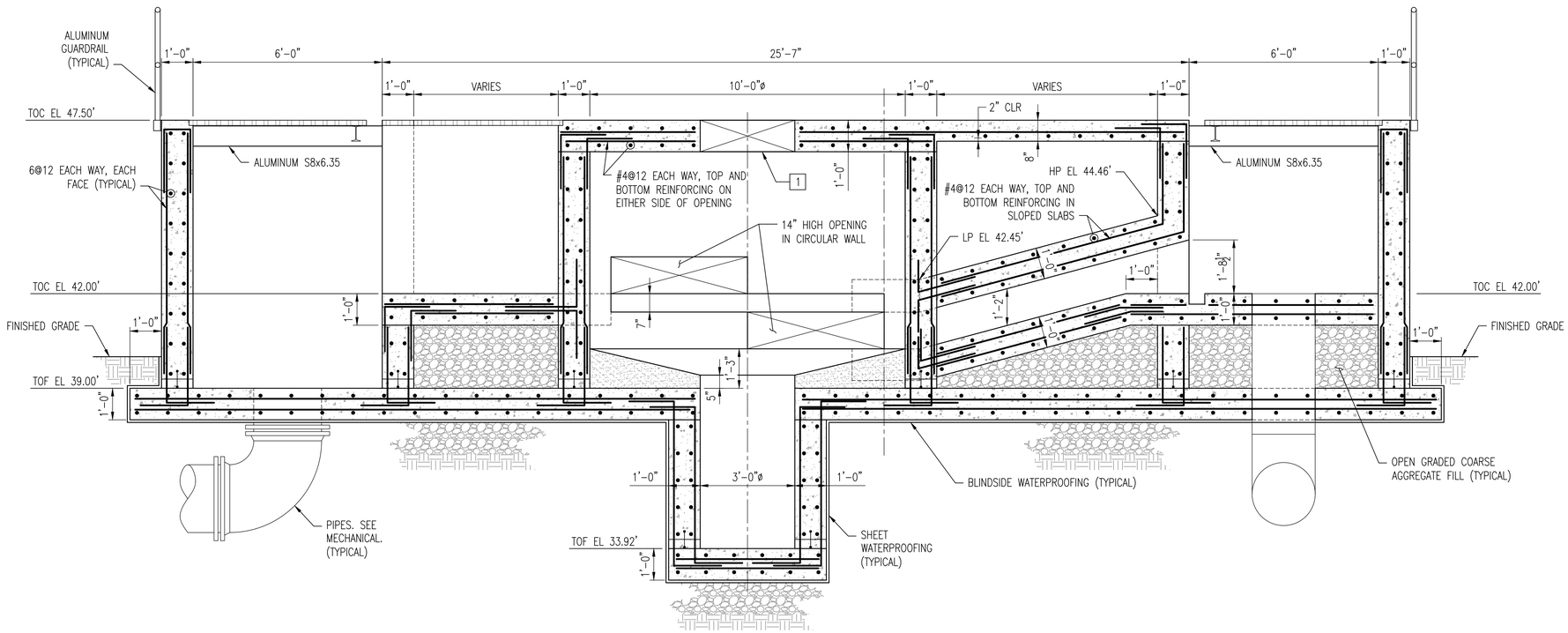

B S02.04 SECTION
SCALE: 1/2" = 1'-0"
REF: S02.01, S02.02, S02.03

REVISIONS		

CLIENT INFORMATION

SUSSEX COUNTY, DE
ENGINEERING
DEPARTMENT

INLAND BAYS RWF
PHASE #2 EXPANSION:
CONTRACT S19-10

KEY PLAN

GRAPHIC SCALES

0 1' 2' 4'
SCALE: 1/2" = 1'-0"

SIGNATURE

BRUCE A. ENGLE
LICENSED
No. 19271
12/7/18
DELAWARE
PROFESSIONAL ENGINEER

Whitman, Requardt & Associates, LLP
801 South Caroline Street, Baltimore, Maryland 21231

GRIT FACILITY
SECTIONS

DRAWING NO.

S02.04

SCALE: 1/2" = 1'-0"		
DATE: DEC. 2018		SHEET 77 OF 217
DES: BJK	DRAWN: CJS	CHECK: BAE

PLOT DATED: 12/7/2018 14706 PM PAGE SETUP: WRA-PSP C36X24) PLOT STYLE: WRA_2006.CTB PAPER SIZE:ARCH FULL BLEED D (36.00 X 24.00 INCHES)
FILENAME: N:\14256-026\CADD\14256026S02-043.DWG
N:\14256-026\CADD\14256026S02-04.dwg

SHEET KEYNOTES

1. OPENING FOR PROCESS EQUIPMENT. COORDINATE SIZE AND LOCATION WITH APPROVED SUBMITTALS.
2. 2-#4 ADDITIONAL EACH SIDE OF WALL OPENING.

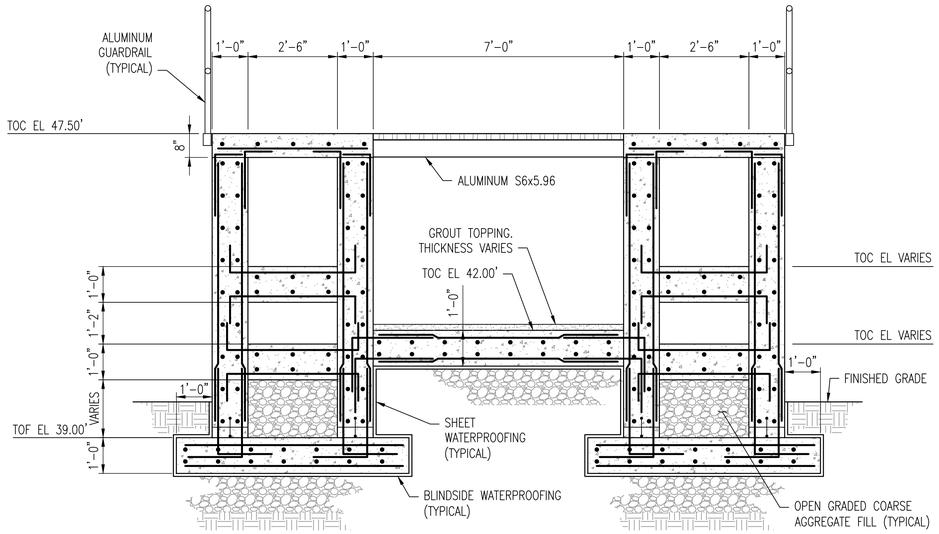

A S02.05 SECTION
SCALE: 1/2" = 1'-0"
REF: S02.01, S02.02, S02.03

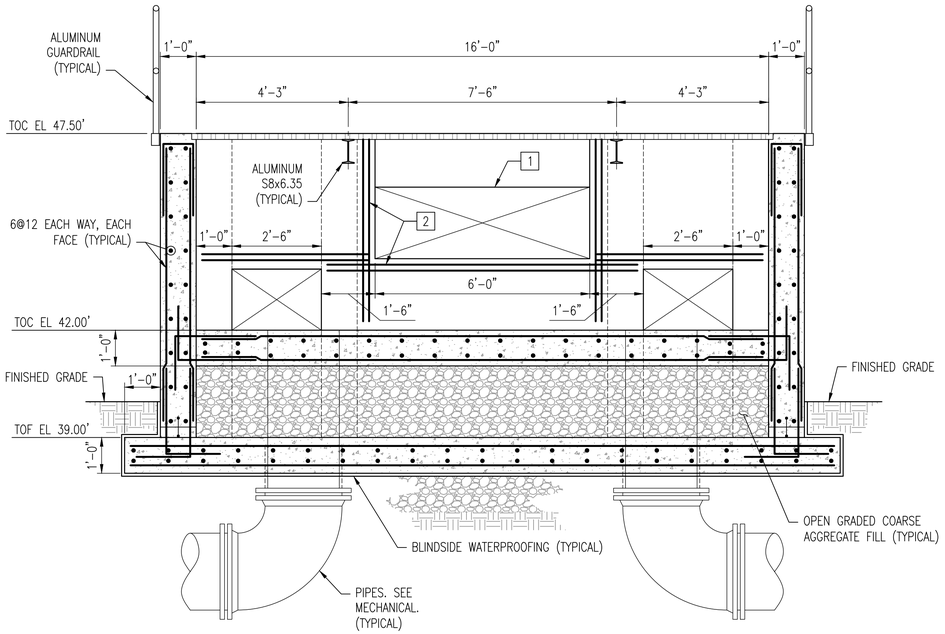

B S02.05 SECTION
SCALE: 1/2" = 1'-0"
REF: S02.01, S02.02, S02.03

REVISIONS

CLIENT INFORMATION

SUSSEX COUNTY, DE
ENGINEERING
DEPARTMENT

INLAND BAYS RWF
PHASE #2 EXPANSION:
CONTRACT S19-10

KEY PLAN

GRAPHIC SCALES

0 1' 2' 4'
SCALE: 1/2" = 1'-0"

SIGNATURE

BRUCE A. ENGLISH
LICENSED
No. 19271
12/7/18
DELAWARE
PROFESSIONAL ENGINEER

WRA
Whitman, Requardt & Associates, LLP
801 South Caroline Street, Baltimore, Maryland 21231

GRIT FACILITY
SECTIONS

DRAWING NO.

S02.05

SCALE: 1/2" = 1'-0"		
DATE: DEC. 2018	SHEET 78 OF 217	
DES: BJK	DRAWN: CJS	CHECK: BAE

PLOT DATE: 12/7/2018 1:17:16 PM PAGE SETUP: WRA-PDF (36X24) PLOT STYLE: WRA_2006.CTB PAPER SIZE:ARCH FULL BLEED D (36.00 X 24.00 INCHES)

FILENAME: N:\14256-026\CADD\14256026S02-05.DWG
N:\14256-026\CADD\14256026S02-05.dwg

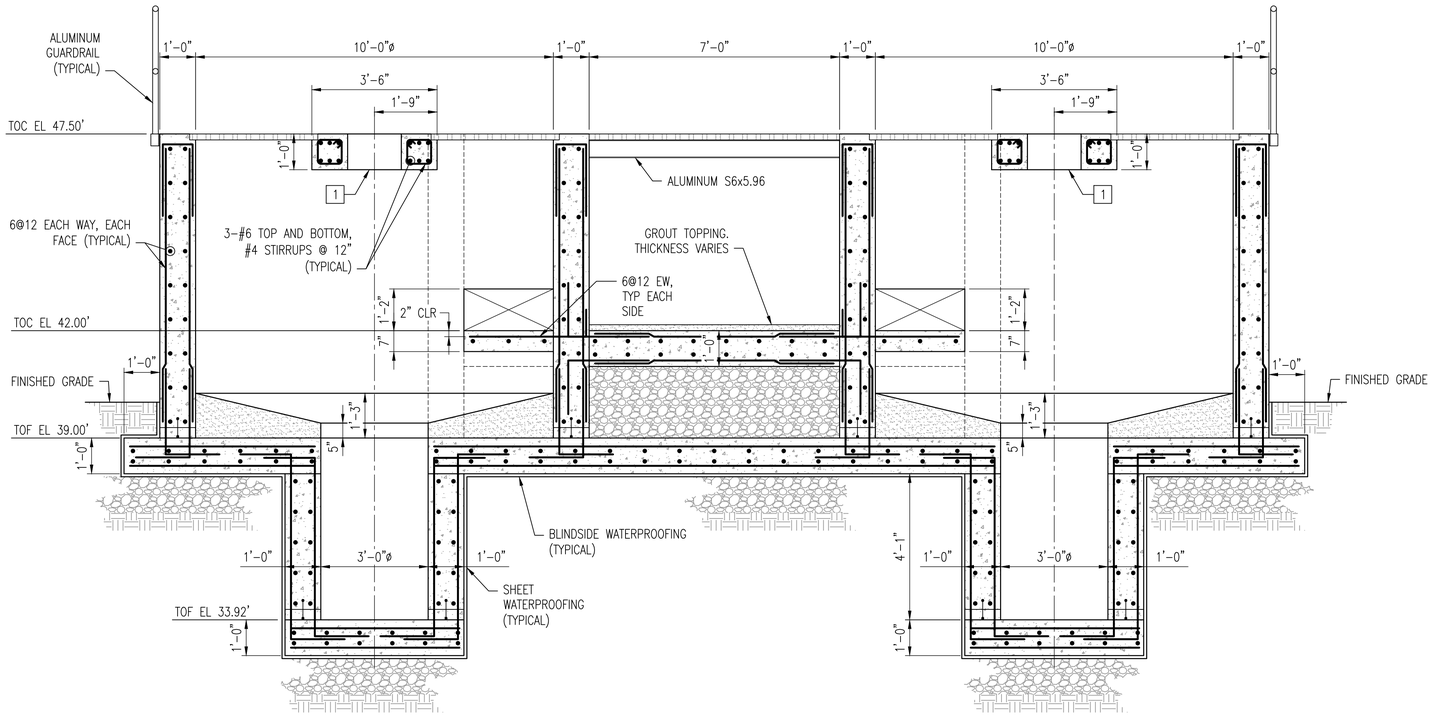

A S02.06 **SECTION**
SCALE: 1/2" = 1'-0"
REF: S02.01, S02.02, S02.03

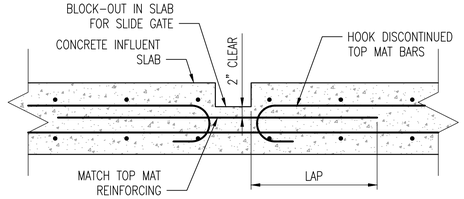

B S02.06 **SECTION**
SCALE: 1" = 1'-0"
REF: S02.02

SHEET KEYNOTES

1 OPENING FOR PROCESS EQUIPMENT. COORDINATE SIZE AND LOCATION WITH APPROVED SUBMITTALS.

REVISIONS

CLIENT INFORMATION

SUSSEX COUNTY, DE
ENGINEERING
DEPARTMENT

INLAND BAYS RWF
PHASE #2 EXPANSION:
CONTRACT S19-10

KEY PLAN

GRAPHIC SCALES

0 1' 2' 4'
SCALE: 1/2" = 1'-0"

0 6" 1' 2'
SCALE: 1" = 1'-0"

SIGNATURE

BRUCE A. ENGLAR
LICENSED
No. 19271
12/7/18
DELAWARE
PROFESSIONAL ENGINEER

Whitman, Requardt & Associates, LLP
801 South Caroline Street, Baltimore, Maryland 21231

GRIT FACILITY
SECTIONS

DRAWING NO.

S02.06

SCALE: AS SHOWN		
DATE: DEC. 2018	SHEET 79 OF 217	
DES: BJK	DRAWN: BJK	CHECK: BAE

PLOT DATE: 12/7/2018 1:17:26 PM PAGE SETUP: WRA-PDF C36(24) PLOT STYLE: WRA_2006CTB PAPER SIZE:ARCH FULL BLEED D (36.00 X 24.00 INCHES)
FILENAME: N:\14256-026\CADD\14256025302-06.DWG
N:\14256-026\CADD\14256026S302-06.dwg

GENERAL SHEET NOTES

1. SEE S00.01 AND S00.02 FOR GENERAL STRUCTURAL NOTES.
2. SEE S00.03 THROUGH S00.07 FOR TYPICAL STRUCTURAL DETAILS.
3. PROVIDE SHEET WATERPROOFING AT ALL EXTERIOR WALLS AND BLINDSIDE WATERPROOFING BENEATH MAT SLABS.
4. WALL REINFORCING NOT SHOWN FOR CLARITY. SEE SECTIONS ON DRAWINGS S03.05 THROUGH S03.07 FOR WALL REINFORCING.
5. SEE DETAIL I/S00.03 IF MAT SLAB CONSTRUCTION JOINTS ARE REQUIRED.

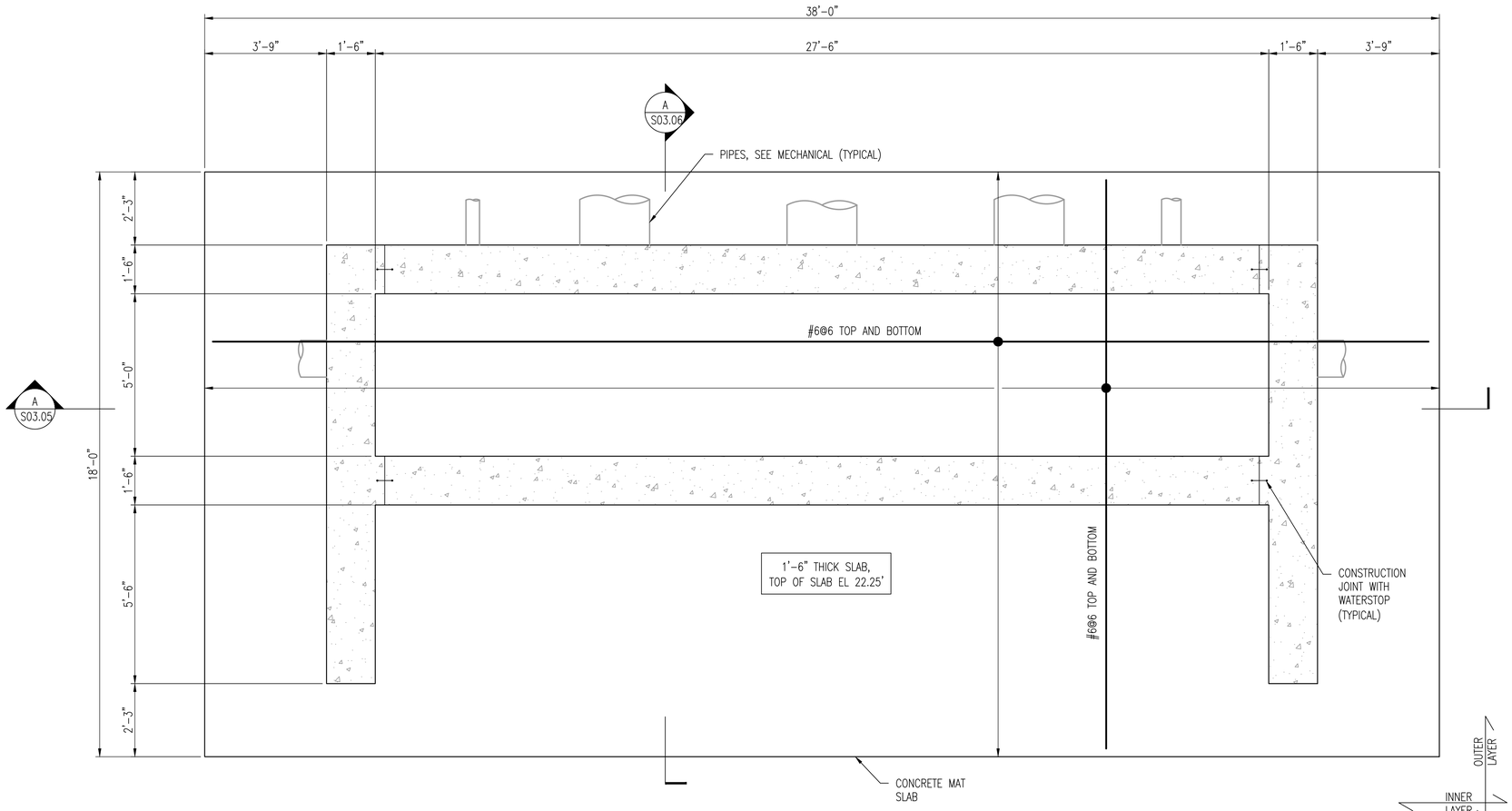

AERATION DISTRIBUTION STATION FOUNDATION PLAN

SCALE: 1/2" = 1'-0"

REVISIONS		

CLIENT INFORMATION

SUSSEX COUNTY, DE
ENGINEERING
DEPARTMENT

INLAND BAYS RWF
PHASE #2 EXPANSION:
CONTRACT S19-10

KEY PLAN

GRAPHIC SCALES

0 1' 2' 4'

SCALE: 1/2" = 1'-0"

SIGNATURE

BRUCE A. ENGLISH
No. 19271
12/7/18
REGISTERED
PROFESSIONAL ENGINEER

Whitman, Requardt & Associates, LLP
801 South Caroline Street, Baltimore, Maryland 21231

AERATION DISTRIBUTION STATION
FOUNDATION PLAN

DRAWING NO.

S03.01

SCALE: 1/2" = 1'-0"		
DATE: DEC. 2018	SHEET 80 OF 217	
DES: WAY	DRAWN: MKS	CHECK: BAE

PLOT DATE: 12/7/2018 11:25 PM PAGE SETUP: WRA-PDF (36X24) PLOT STYLE: WRA_2006.CTB PAPER SIZE:ARCH FULL BLEED D (36.00 X 24.00 INCHES)
FILENAME: N:\14256-026\CADD\14256026S03-01.DWG
N:\14256-026\CADD\14256026S03-01.dwg

GENERAL SHEET NOTES

1. SEE S00.01 AND S00.02 FOR GENERAL STRUCTURAL NOTES.
2. SEE S00.03 THROUGH S00.07 FOR TYPICAL STRUCTURAL DETAILS.
3. PROVIDE SHEET WATERPROOFING AT ALL EXTERIOR WALLS AND BLINDSIDE WATERPROOFING BENEATH MAT SLABS.
4. WALL REINFORCING NOT SHOWN FOR CLARITY. SEE SECTIONS ON DRAWINGS S03.05 THROUGH S03.07 FOR WALL REINFORCING.

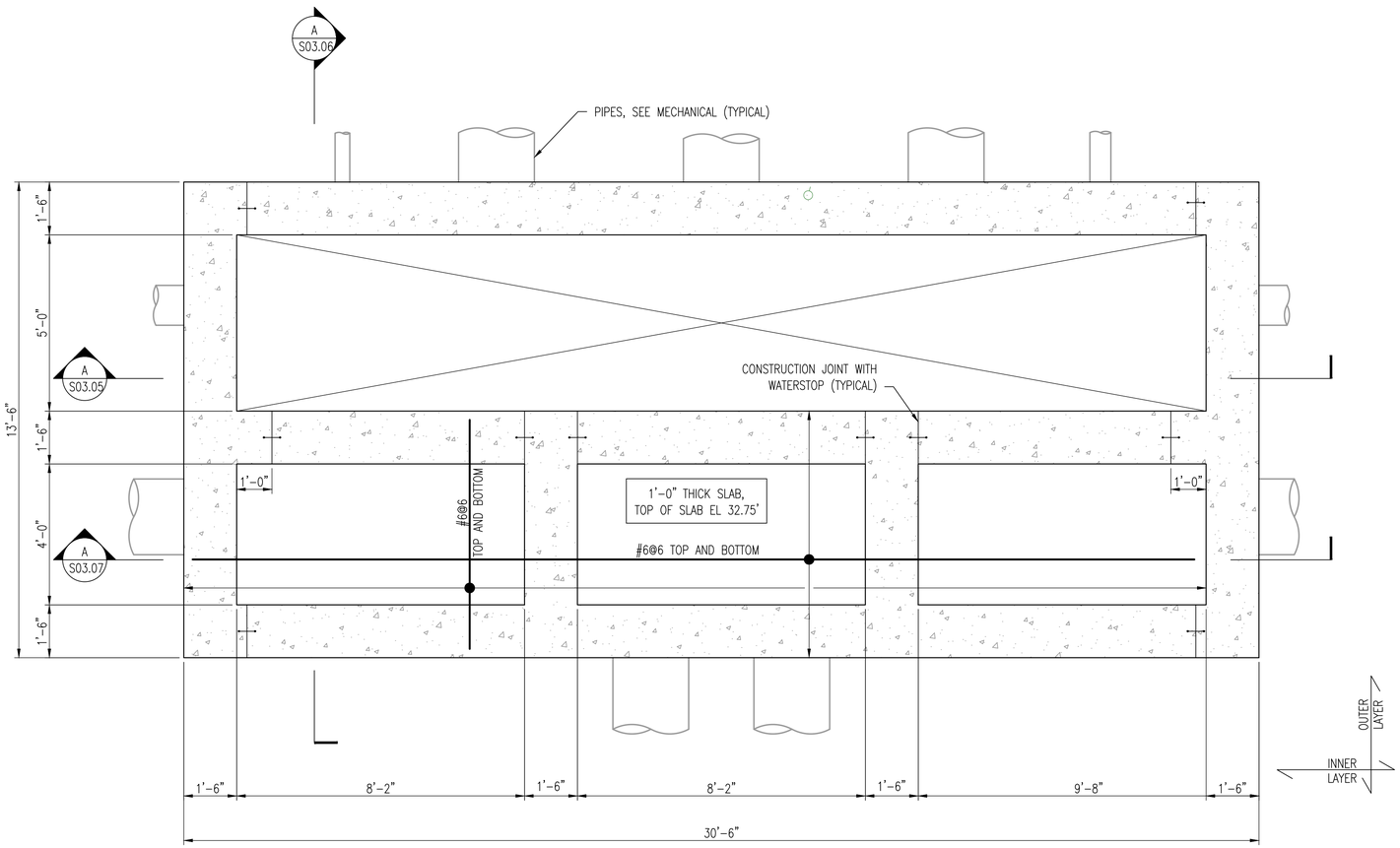

AERATION DISTRIBUTION STATION INTERMEDIATE PLAN

SCALE: 1/2" = 1'-0"

REVISIONS

CLIENT INFORMATION

SUSSEX COUNTY, DE
ENGINEERING
DEPARTMENT

INLAND BAYS RWF
PHASE #2 EXPANSION:
CONTRACT S19-10

KEY PLAN

GRAPHIC SCALES

0 1' 2' 4'

SCALE: 1/2" = 1'-0"

SIGNATURE

BRUCE A. ESHLEMAN
LICENSED
No. 19271
12/7/18
DELAWARE
PROFESSIONAL ENGINEER

Whitman, Requardt & Associates, LLP
801 South Caroline Street, Baltimore, Maryland 21231

AERATION DISTRIBUTION STATION
INTERMEDIATE PLAN

DRAWING NO.

S03.02

SCALE: 1/2" = 1'-0"		
DATE: DEC. 2018	SHEET 81 OF 217	
DES: WAY	DRAWN: MKS	CHECK: BAE

PLOT DATE: 12/7/2018 1:7:45 PM PAGE SETUP: VRA-PDF (36X24) PLOT STYLE: VRA_2006.CTB PAPER SIZE:ARCH FULL BLEED D (36.00 X 24.00 INCHES)
FILENAME: N:\14256-026\CADD\14256085503-02.DWG
N:\14256-026\CADD\14256085503-02.dwg

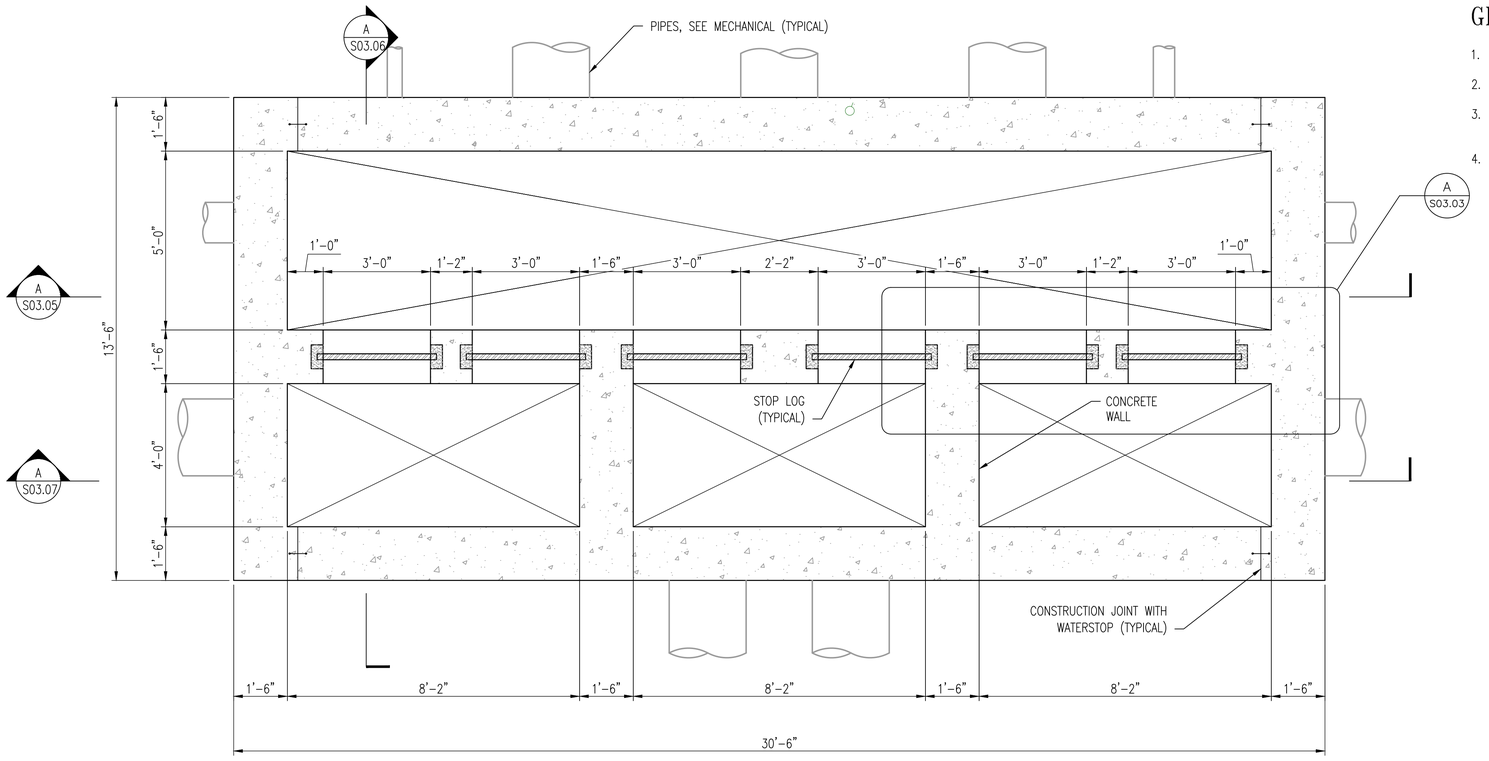

AERATION DISTRIBUTION STATION STOP LOG PLAN

SCALE: 1/2" = 1'-0"

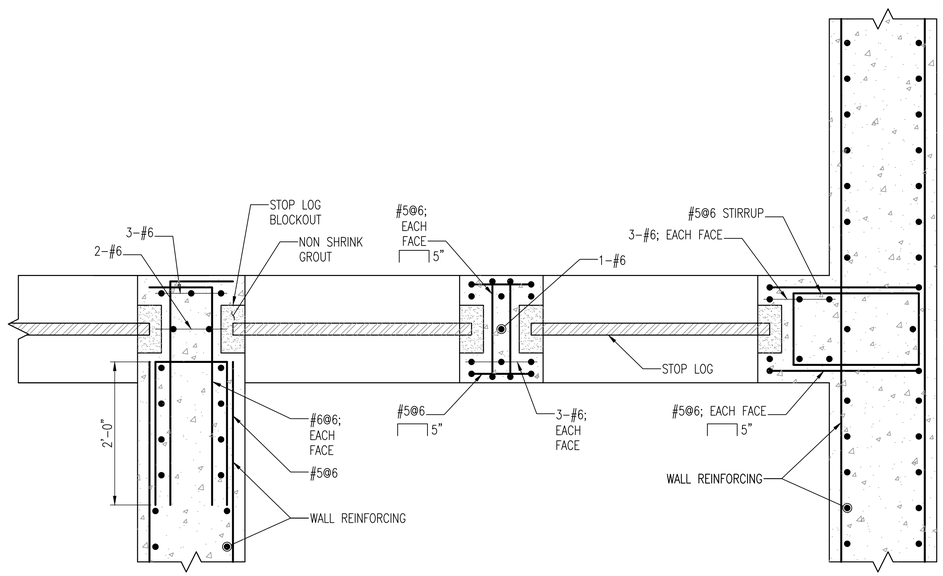

A S03.03 **DETAIL**

SCALE: 1" = 1'-0"

REF: S03.03

GENERAL SHEET NOTES

1. SEE S00.01 AND S00.02 FOR GENERAL STRUCTURAL NOTES.
2. SEE S00.03 THROUGH S00.07 FOR TYPICAL STRUCTURAL DETAILS.
3. PROVIDE SHEET WATERPROOFING AT ALL EXTERIOR WALLS AND BLINDSIDE WATERPROOFING BENEATH MAT SLABS.
4. WALL REINFORCING NOT SHOWN FOR CLARITY. SEE SECTIONS ON DRAWINGS S03.05 THROUGH S03.07 FOR WALL REINFORCING.

REVISIONS

CLIENT INFORMATION

SUSSEX COUNTY, DE
ENGINEERING
DEPARTMENT

INLAND BAYS RWF
PHASE #2 EXPANSION:
CONTRACT S19-10

KEY PLAN

GRAPHIC SCALES

0 1' 2' 4'
SCALE: 1/2" = 1'-0"

0 6" 1' 2'
SCALE: 1" = 1'-0"

SIGNATURE

BRUCE A. ENGLISH
No. 19271
12/7/18
REGISTERED PROFESSIONAL ENGINEER

Whitman, Requardt & Associates, LLP
801 South Caroline Street, Baltimore, Maryland 21231

AERATION DISTRIBUTION STATION
STOP LOG PLAN AND DETAIL

DRAWING NO.

S03.03

SCALE: AS SHOWN		
DATE: DEC. 2018	SHEET 82 OF 217	
DES: WAY	DRAWN: CJS	CHECK: BAE

PLOT DATE: 12/7/2018 11:25:25 PM PAGE SETUP: WRA-PDF (36X24) PLOT STYLE: WRA_2006.CTB PAPER SIZE:ARCH FULL BLEED D (36.00 X 24.00 INCHES)
FILENAME: N:\14256-026\CADD\14256026S03-03.DWG
N:\14256-026\CADD\14256026S03-03.dwg

GENERAL SHEET NOTES

1. SEE S00.01 AND S00.02 FOR GENERAL STRUCTURAL NOTES.
2. SEE S00.03 THROUGH S00.07 FOR TYPICAL STRUCTURAL DETAILS.
3. PROVIDE SHEET WATERPROOFING AT ALL EXTERIOR WALLS AND BLINDSIDE WATERPROOFING BENEATH MAT SLABS.
4. METAL STAIR FRAMING, CONNECTIONS, GRATING TREADS, AND PIPE AND TUBE RAILING ARE DELEGATED DESIGN ITEMS.
5. PROVIDE 2-1/2" FRP GRATING WITH THE MINIMUM PROPERTIES:
   a. AREA (A): 21.17 IN^2/FT
   b. SECTION MODULUS (S_x): 8.82 IN^3/FT
   c. MOMENT OF INTERIA (I_x): 11.03 IN^4/FT
   d. MODULUS OF ELASTICITY (E): $5.70x10^6$ PSI
   e. PROVIDE ALUMINUM OXIDE GRIT TOP SURFACE.
6. PROVIDE 2" FRP GRATING WITH THE MINIMUM PROPERTIES:
   a. AREA (A): 9.60 IN^2/FT
   b. SECTION MODULUS (S_x): 3.20 IN^3/FT
   c. MOMENT OF INTERIA (I_x): 3.20 IN^4/FT
   d. MODULUS OF ELASTICITY (E): $5.65x10^6$ PSI
   e. PROVIDE ALUMINUM OXIDE GRIT TOP SURFACE.
7. PLACE JOINT AT MIDPOINT IN 2" FRP GRATING SO TWO SEPARATE PANELS ARE CREATED ABOVE THE SUBMERSIBLE MIXERS.
8. SEE DRAWING S03.06 FOR INFORMATION ABOUT BACKFILLING AND WATER TESTING.

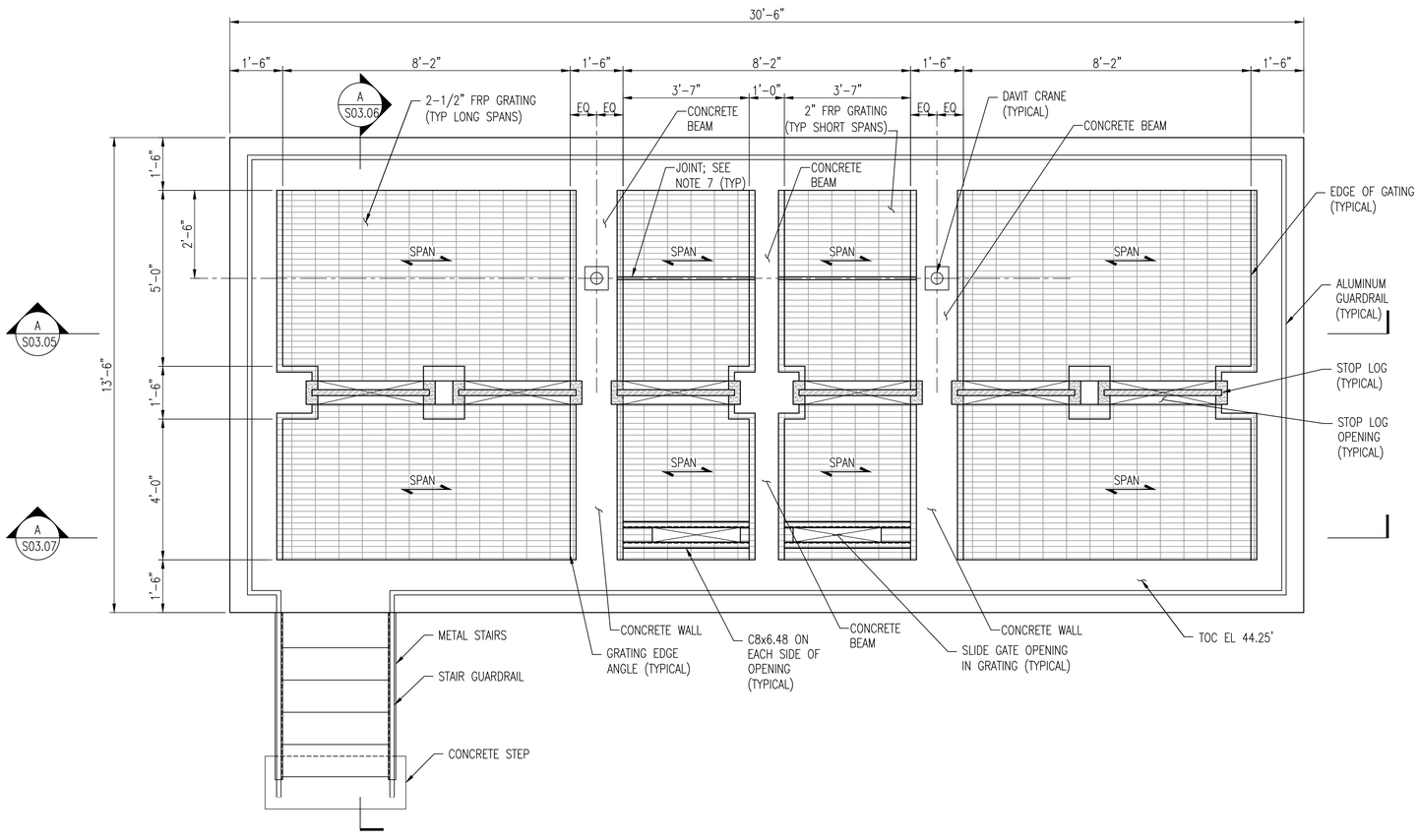

AERATION DISTRIBUTION STATION TOP PLAN

SCALE: 1/2" = 1'-0"

REVISIONS		

CLIENT INFORMATION

SUSSEX COUNTY, DE ENGINEERING DEPARTMENT

INLAND BAYS RWF PHASE #2 EXPANSION: CONTRACT S19-10

KEY PLAN

GRAPHIC SCALES

0 1' 2' 4'

SCALE: 1/2" = 1'-0"

SIGNATURE

BRIAN A. ENGLE — PROFESSIONAL ENGINEER — No. 19271 — 12/7/18 — DELAWARE — PROFESSIONAL ENGINEER

Whitman, Requardt & Associates, LLP
801 South Caroline Street, Baltimore, Maryland 21231

AERATION DISTRIBUTION STATION TOP PLAN

DRAWING NO.

S03.04

SCALE: 1/2" = 1'-0"		
DATE: DEC. 2018	SHEET 83 OF 217	
DES: WAY	DRAWN: CJS	CHECK: BAE

PLOT DATE: 12/7/2018 10:05 PM PAGE SETUP: WRA-PDF C36X24 PLOT STYLE: WRA_2006.CTB PAPER SIZE:ARCH FULL BLEED D C36.00 X 24.00 (INCHES)
FILENAME: N:\14256-026\CADD\14256026S03-04.DWG
N:\14256-026\CADD\14256026S03-04.dwg

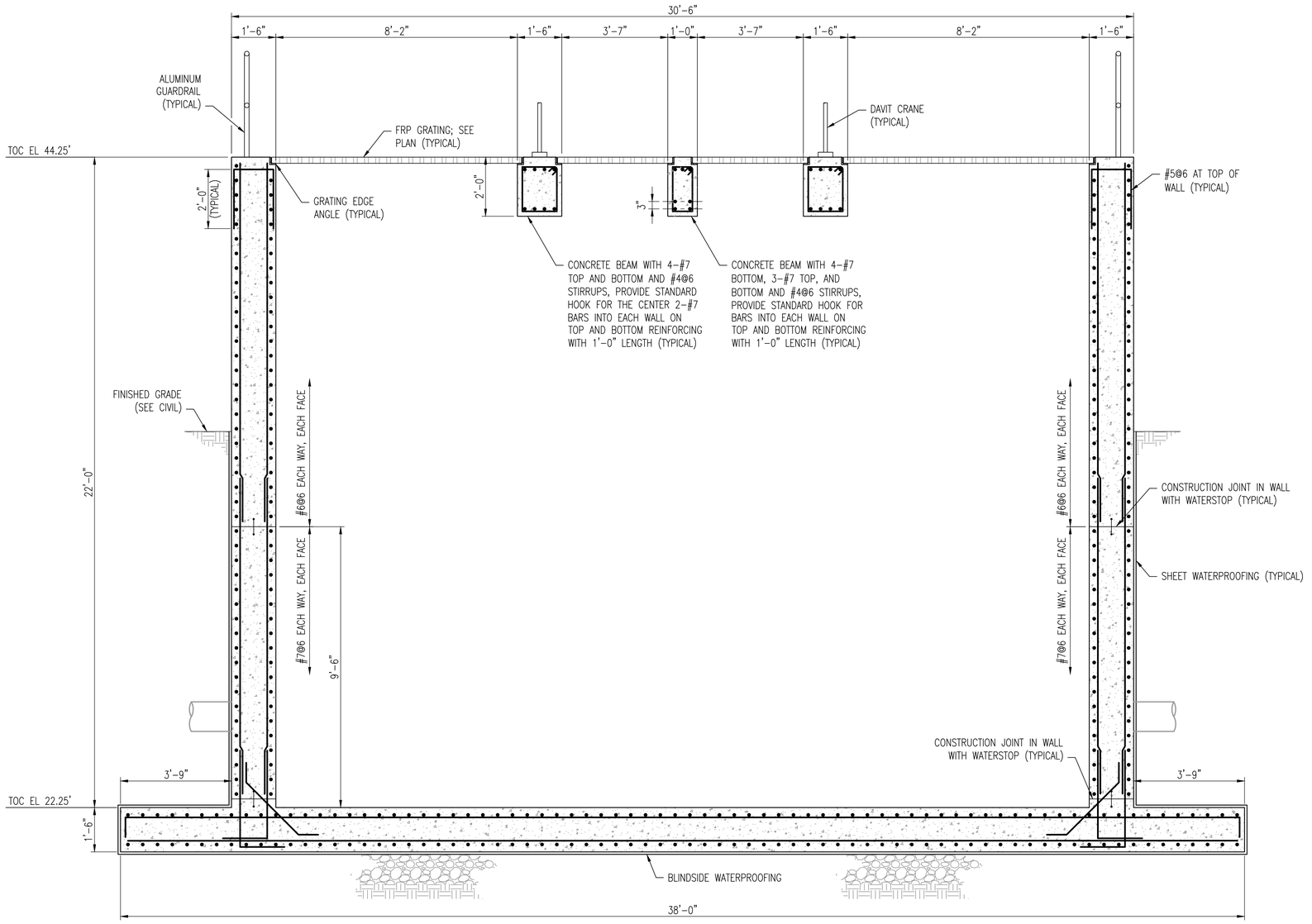

A S03.05 SECTION
SCALE: 1/2" = 1'-0"
REF: S03.01, S03.02, S03.03, S03.04

REVISIONS		

CLIENT INFORMATION

SUSSEX COUNTY, DE
ENGINEERING
DEPARTMENT

INLAND BAYS RWF
PHASE #2 EXPANSION:
CONTRACT S19-10

KEY PLAN

GRAPHIC SCALES

0 1' 2' 4'
SCALE: 1/2" = 1'-0"

SIGNATURE

BRIAN A. ENGLE
LICENSED
No. 19271
12/7/18
DELAWARE
PROFESSIONAL ENGINEER

Whitman, Requardt & Associates, LLP
801 South Caroline Street, Baltimore, Maryland 21231

AERATION DISTRIBUTION STATION SECTION

DRAWING NO.

S03.05

SCALE: 1/2" = 1'-0"		
DATE: DEC. 2018	SHEET 84 OF 217	
DES: WAY	DRAWN: CJS	CHECK: BAE

PLOT DATE: 12/7/2018 10:16 PM PAGE SETUP: WRA-PDF (36X24) PLOT STYLE: WRA_2006_CTB PAPER SIZE:ARCH FULL BLEED D (36.00 X 24.00 INCHES)
FILENAME: N:\14256-026\CADD\14256026S03-05.DWG
N:\14256-026\CADD\14256026S03-05.dwg

GENERAL SHEET NOTES

1. SEE S00.01 AND S00.02 FOR GENERAL STRUCTURAL NOTES.
2. THE STRUCTURE WAS DESIGNED TO ALLOW FOR THE MAT SLAB AND WALLS TO BE CONSTRUCTED TO ELEVATION 31.75' AND TESTED FOR WATER TIGHTNESS. AFTER THAT THE REMAINDER OF THE STRUCTURE CAN BE BUILT AND TESTED FOR WATER TIGHTNESS. THIS ALLOWS FOR EACH WALL AREA TO BE TESTED FOR WATER TIGHTNESS IN STAGES WITH NO BACKFILLING.

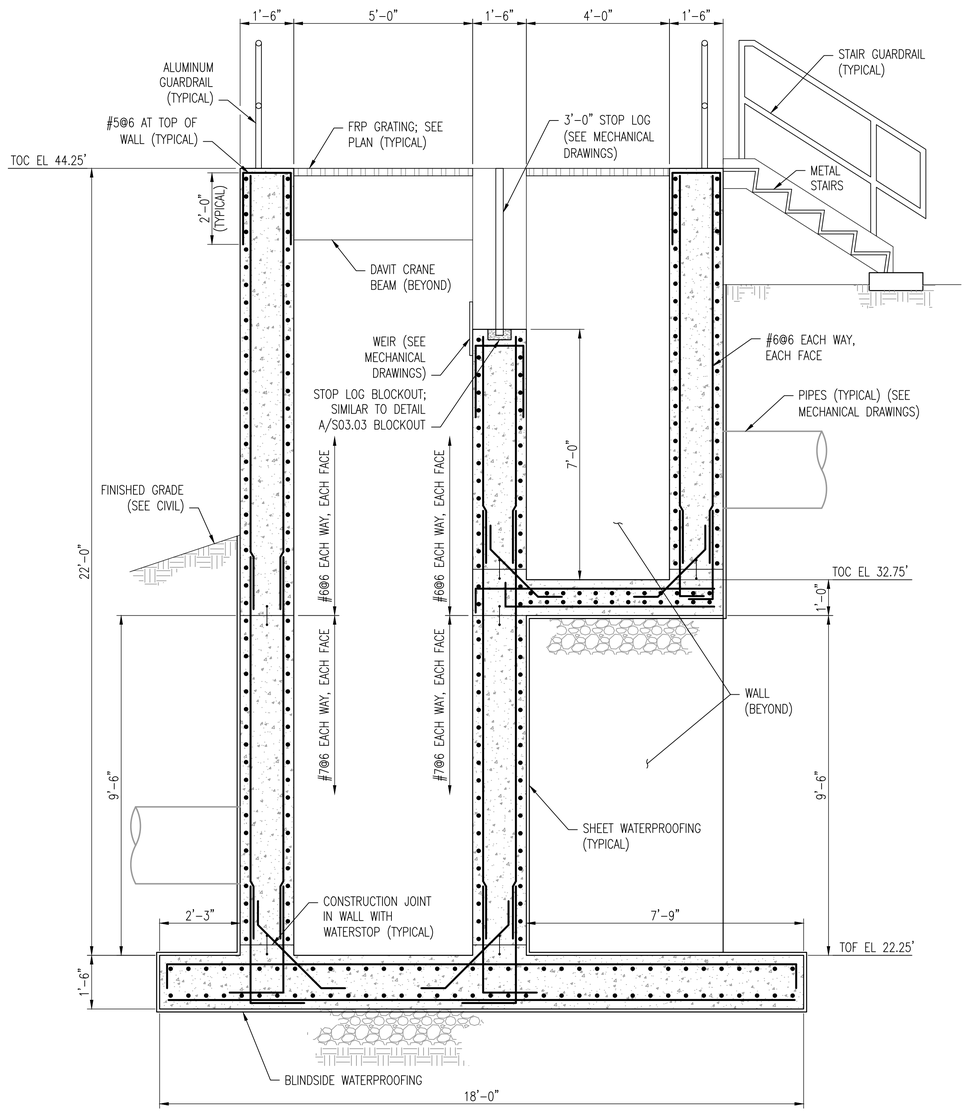

A S03.06 SECTION
SCALE: 1/2" = 1'-0"
REF: S03.01, S03.02, S03.03, S03.04

REVISIONS		

CLIENT INFORMATION

SUSSEX COUNTY, DE ENGINEERING DEPARTMENT

INLAND BAYS RWF PHASE #2 EXPANSION: CONTRACT S19-10

KEY PLAN

GRAPHIC SCALES

0 1' 2' 4'
SCALE: 1/2" = 1'-0"

SIGNATURE



Whitman, Requardt & Associates, LLP
801 South Caroline Street, Baltimore, Maryland 21231

AERATION DISTRIBUTION STATION SECTION

DRAWING NO.

S03.06

SCALE: 1/2" = 1'-0"		
DATE: DEC. 2018	SHEET 85 OF 217	
DES: WAY	DRAWN: CJS	CHECK: BAE

PLOT DATE: 12/7/2018 10:25 PM PAGE SETUP: WRA-PDF (36x24) PLOT STYLE: WRA_2006.CTB PAPER SIZE:ARCH FULL BLEED D (36.00 X 24.00 INCHES)
FILENAME: N:\14256-026\CADD\14256026S03-06.DWG
N:\14256-026\CADD\14256026S03-06.dwg

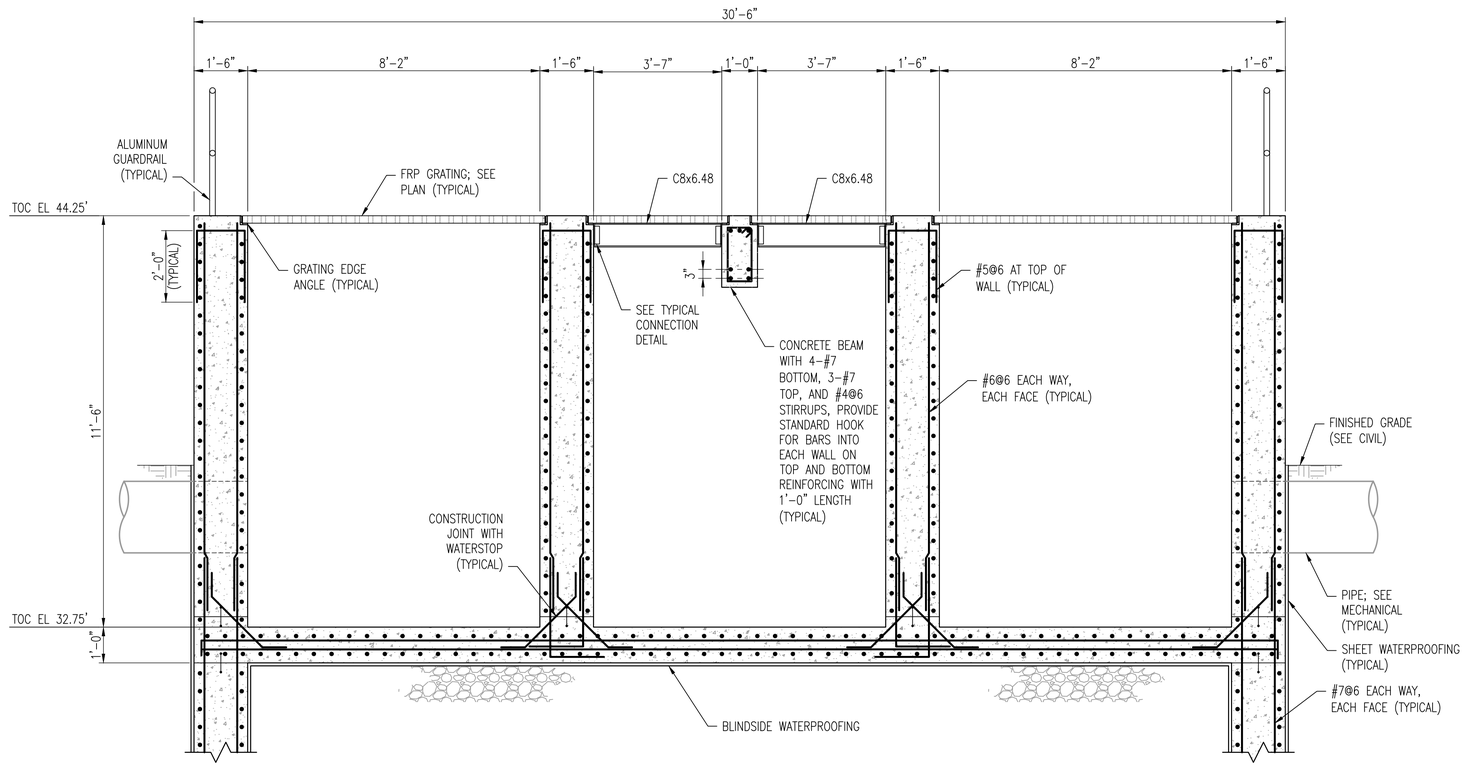

A / S03.07 SECTION

SCALE: 1/2" = 1'-0"

REF: S03.02, S03.03, S03.04

REVISIONS		

CLIENT INFORMATION

SUSSEX COUNTY, DE
ENGINEERING
DEPARTMENT

INLAND BAYS RWF
PHASE #2 EXPANSION:
CONTRACT S19-10

KEY PLAN

GRAPHIC SCALES

0 1' 2' 4'

SCALE: 1/2" = 1'-0"

SIGNATURE

BRUCE A. ENGLAND
LICENSED
No. 19271
12/7/18
DELAWARE
PROFESSIONAL ENGINEER

Whitman, Requardt & Associates, LLP
801 South Caroline Street, Baltimore, Maryland 21231

AERATION DISTRIBUTION STATION SECTION

DRAWING NO.

S03.07

SCALE: 1/2" = 1'-0"		
DATE: DEC. 2018	SHEET 86 OF 217	
DES: WAY	DRAWN: CJS	CHECK: BAE

PLOT DATE: 12/7/2018 10:35 PM PAGE SETUP: WRA-PDF (36X24) PLOT STYLE: WRA_2006.CTB PAPER SIZE:ARCH FULL BLEED D (36.00 X 24.00 INCHES)
FILENAME: N:\14256-026\CADD\14256026S03-07.DWG
N:\14256-026\CADD\14256026S03-07.dwg

GENERAL SHEET NOTES

1. SEE S00.01 AND S00.02 FOR GENERAL STRUCTURAL NOTES.
2. SEE S00.03 THROUGH S00.07 FOR TYPICAL STRUCTURAL DETAILS.
3. PROVIDE SHEET WATERPROOFING AT ALL EXTERIOR WALLS AND BLINDSIDE WATERPROOFING BENEATH MAT SLABS.
4. THE DIMENSIONS ARE PLUS/MINUS BECAUSE THE STRUCTURE LINES UP WITH THE EXISTING STRUCTURAL WALLS AND BASE SLAB. FIELD VERIFY EXISTING STRUCTURE DIMENSIONS AND NOTIFY THE ENGINEER IF DIMENSIONS VARY LARGELY FROM WHAT IS SHOWN.
5. WALL REINFORCING NOT SHOWN FOR CLARITY. SEE SECTIONS ON DRAWING S05.02 FOR WALL REINFORCING.

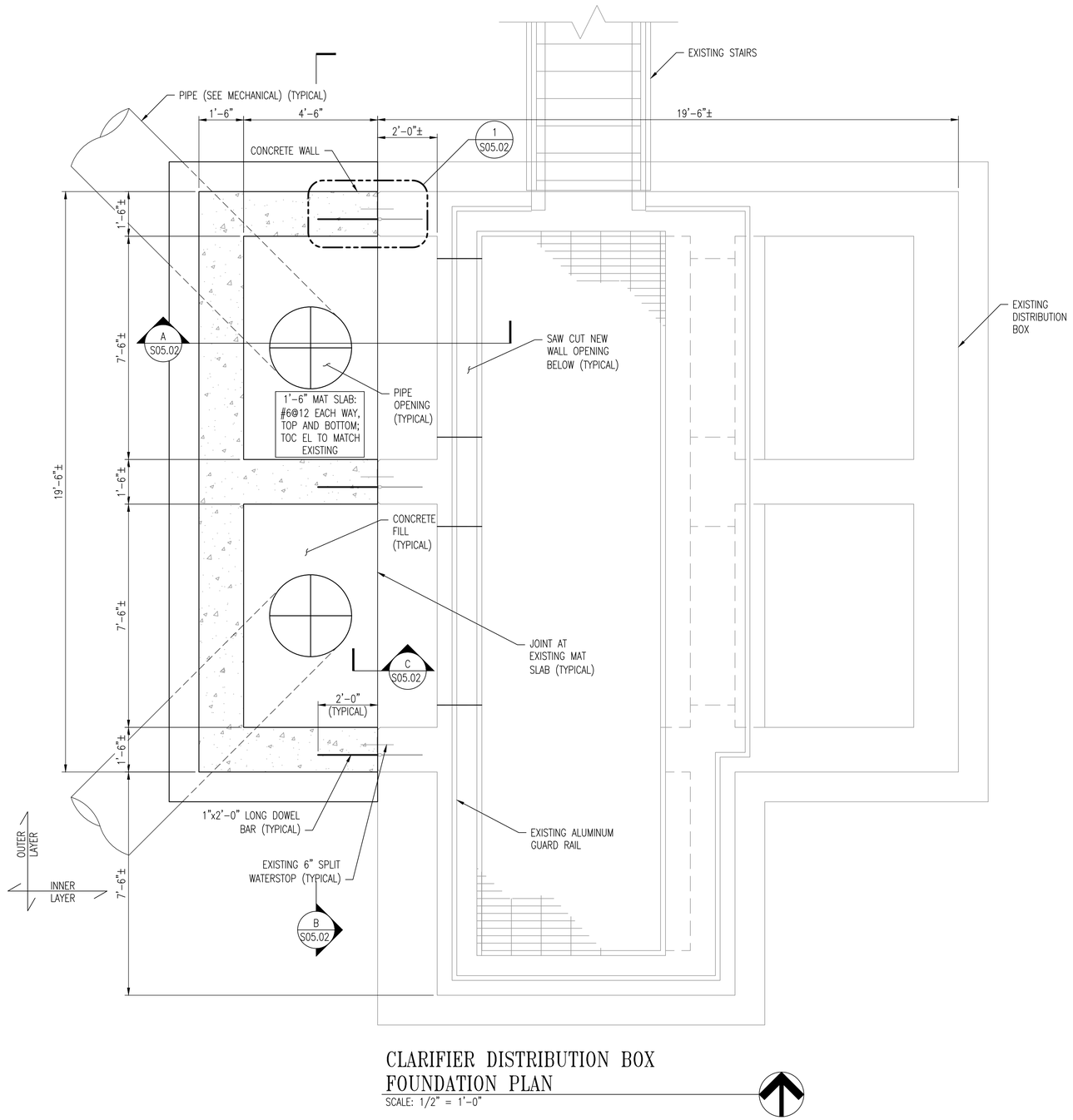

CLARIFIER DISTRIBUTION BOX FOUNDATION PLAN

SCALE: 1/2" = 1'-0"

REVISIONS

CLIENT INFORMATION

SUSSEX COUNTY, DE
ENGINEERING DEPARTMENT

INLAND BAYS RWF
PHASE #2 EXPANSION:
CONTRACT S19-10

KEY PLAN

GRAPHIC SCALES

0 1' 2' 4'

SCALE: 1/2" = 1'-0"

SIGNATURE

BRIAN A. ENGLE
LICENSED
No. 19271
12/7/18
DELAWARE
PROFESSIONAL ENGINEER

Whitman, Requardt & Associates, LLP
801 South Caroline Street, Baltimore, Maryland 21231

CLARIFIER DISTRIBUTION BOX FOUNDATION PLAN

DRAWING NO.

S05.01

SCALE: 1/2" = 1'-0"		
DATE: DEC. 2018	SHEET 87 OF 217	
DES: WAY	DRAWN: MKS	CHECK: BAE

PLOT DATE: 12/7/2018 10:04:46 PM PAGE SETUP: VRA-PDF (36X24) PLOT STYLE: VRA_2006.CTB PAPER SIZE:ARCH FULL BLEED D (36.00 X 24.00 INCHES)
FILENAME: N:\14256-025\CADD\14256025S05-01.DWG
N:\14256-025\CADD\14256025S05-01.dwg

GENERAL SHEET NOTES

1. SEE S00.01 AND S00.02 FOR GENERAL STRUCTURAL NOTES.
2. SEE S00.03 THROUGH S00.07 FOR TYPICAL STRUCTURAL DETAILS.
3. PROVIDE SHEET WATERPROOFING AT ALL EXTERIOR WALLS AND BLINDSIDE WATERPROOFING BENEATH MAT SLABS.
4. THE DIMENSIONS ARE PLUS/MINUS BECAUSE THE STRUCTURE LINES UP WITH THE EXISTING STRUCTURAL WALLS AND BASE SLAB. FIELD VERIFY EXISTING STRUCTURE DIMENSIONS AND NOTIFY THE ENGINEER IF DIMENSIONS VARY LARGELY FROM WHAT IS SHOWN.

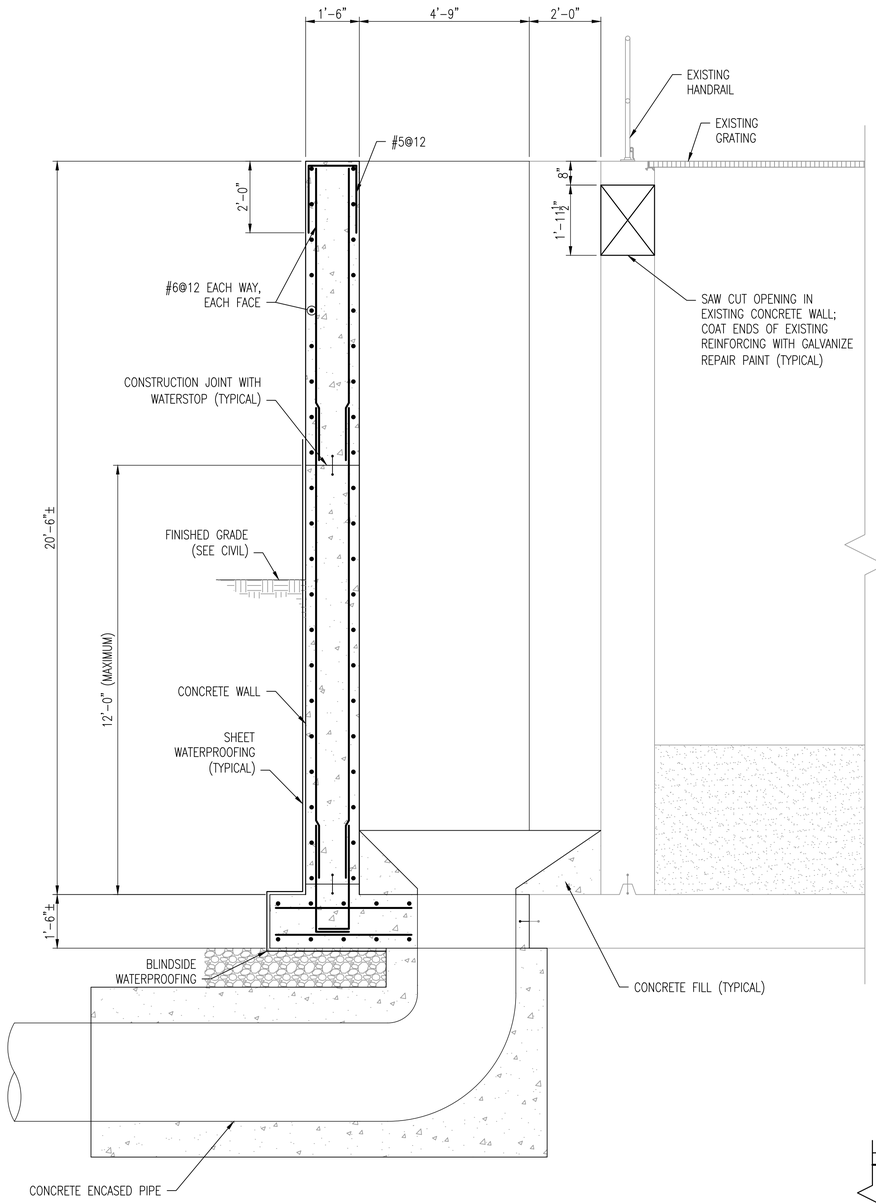

A S05.02 **SECTION**
SCALE: 1/2" = 1'-0"
REF: S05.01

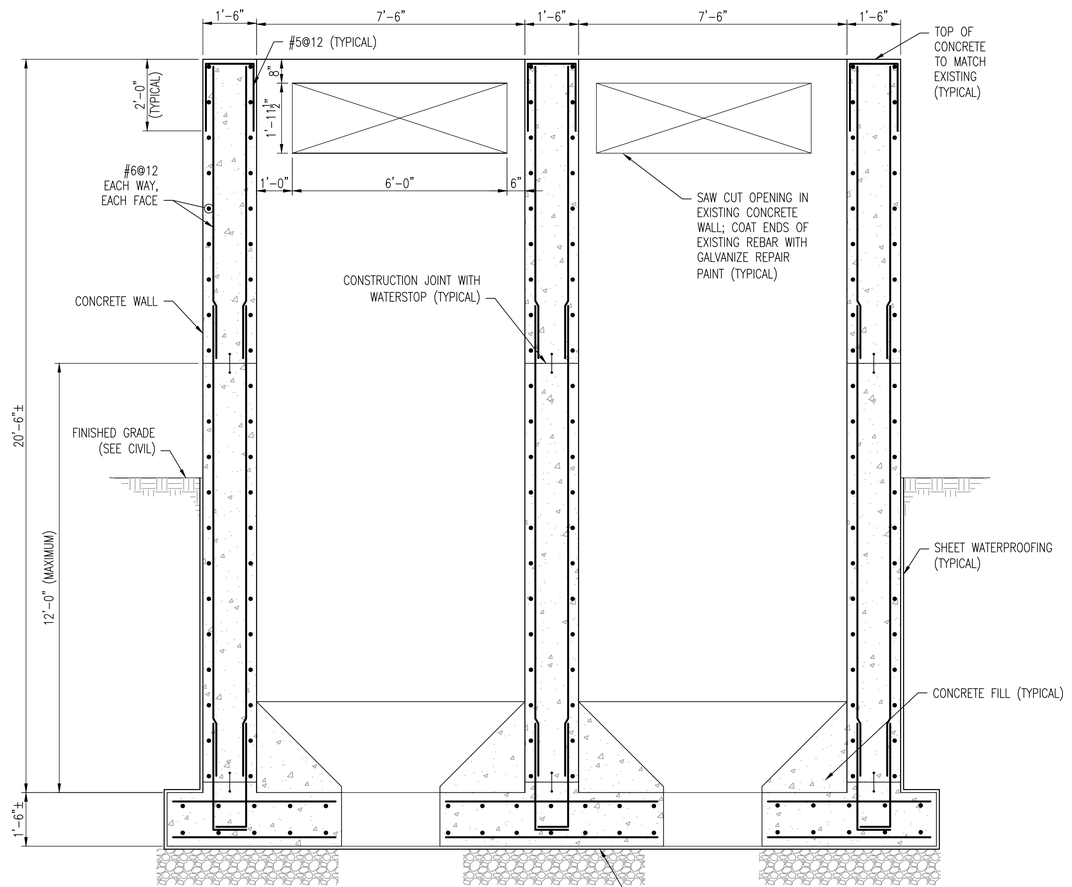

B S05.02 **SECTION**
SCALE: 1/2" = 1'-0"
REF: S05.01

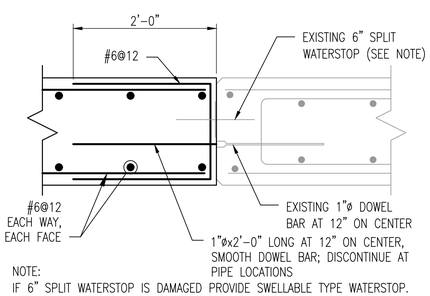

1 S05.02 **DETAIL**
SCALE: 1" = 1'-0"
REF: S05.01

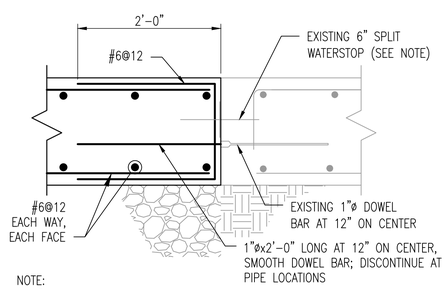

C S05.02 **SECTION**
SCALE: 1" = 1'-0"
REF: S05.01

REVISIONS

CLIENT INFORMATION

SUSSEX COUNTY, DE
ENGINEERING
DEPARTMENT

INLAND BAYS RWF
PHASE #2 EXPANSION:
CONTRACT S19-10

KEY PLAN

GRAPHIC SCALES

0 1' 2' 4'
SCALE: 1/2" = 1'-0"

0 6" 1' 2'
SCALE: 1" = 1'-0"

SIGNATURE

BRIAN A. ENGLE
LICENSED
No. 19271
12/7/18
DELAWARE
PROFESSIONAL ENGINEER

Whitman, Requardt & Associates, LLP
801 South Caroline Street, Baltimore, Maryland 21231

CLARIFIER DISTRIBUTION BOX SECTIONS AND DETAIL

DRAWING NO.

S05.02

SCALE: AS NOTED		
DATE: DEC. 2018	SHEET 88 OF 217	
DES: WAY	DRAWN: CJS	CHECK: BAE

PLOT DATE: 12/7/2018 10:05:05 PM PAGE SETUP: VRA-PDF C36X24 PLOT STYLE: VRA_2006.CTB PAPER SIZE:ARCH FULL BLEED D (36.00 X 24.00 INCHES)
FILENAME: N:\14256-028\CADD\14256028S05-02.DWG
N:\14256-028\CADD\14256028S05-02.dwg

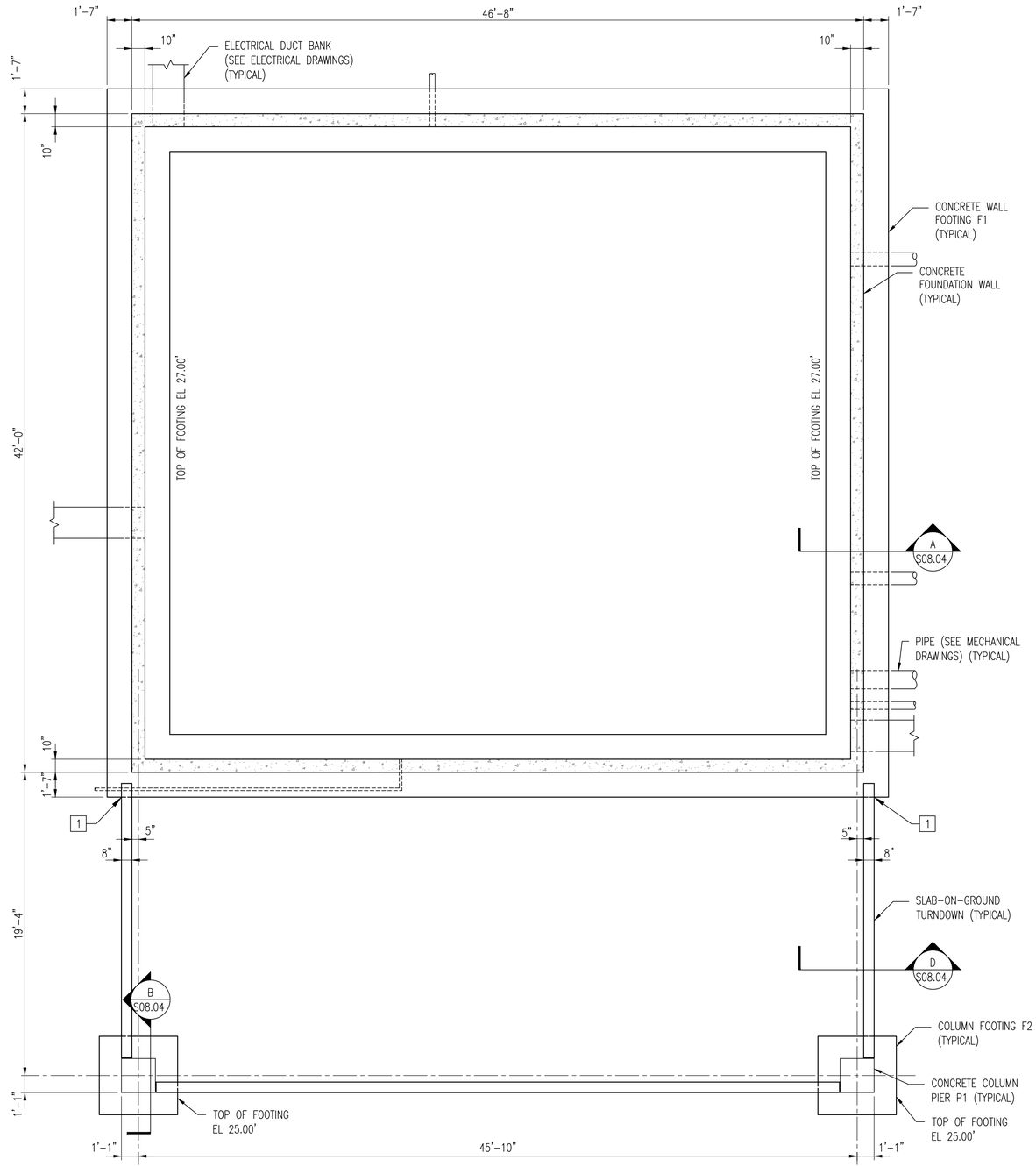

PUMP AND BLOWER BUILDING No 2 - FOUNDATION PLAN

SCALE: 1/4" = 1'-0"

GENERAL SHEET NOTES

1. SEE S00.01 AND S00.02 FOR GENERAL STRUCTURAL NOTES.
2. SEE S00.03 THROUGH S00.07 FOR TYPICAL STRUCTURAL DETAILS.
3. COORDINATE STRUCTURAL SHEETS WITH OTHER DISCIPLINES.

SHEET KEYNOTES

1 STEP SLAB-ON-GROUND TURNDOWN OVER FOOTING.

FOUNDATION SCHEDULE

FOOTING NUMBER	DIMENSIONS	REINFORCING
F1	4'-0"x12" CONTINUOUS	#5@12 SW, 5#4 LW
F2	5'-0"x5'-0"x12"	6#5 EACH WAY

PIER SCHEDULE

PIER NUMBER	SIZE	REINFORCING VERTICAL	STIRRUPS
P1	26"x26"	8#8	#4@10

REVISIONS

CLIENT INFORMATION

SUSSEX COUNTY, DE
ENGINEERING
DEPARTMENT

INLAND BAYS RWF
PHASE #2 EXPANSION:
CONTRACT S19-10

KEY PLAN

GRAPHIC SCALES

0 2' 4' 8'
SCALE: 1/4" = 1'-0"

SIGNATURE

BRUCE A. ENGLISH
LICENSED
No. 19271
12/7/18
DELAWARE
PROFESSIONAL ENGINEER

Whitman, Requardt & Associates, LLP
801 South Caroline Street, Baltimore, Maryland 21231

PUMP AND BLOWER
BUILDING NO.2 - FOUNDATION PLAN

DRAWING NO.

S08.01

SCALE: 1/4" = 1'-0"

DATE: DEC. 2018 | SHEET 89 OF 217

DES: KEC | DRAWN: MKS | CHECK: BAE

PLOT DATE: 12/7/2018 1:19:05 PM PAGE SETUP: WRA-PDF (36X24) PLOT STYLE: WRA_2006.CTB PAPER SIZE:ARCH FULL BLEED D (36.00 X 24.00 INCHES)

FILENAME: N:\14256-026\CADD\14256026S08-01.DWG
N:\14256-026\CADD\14256026S08-01.dwg

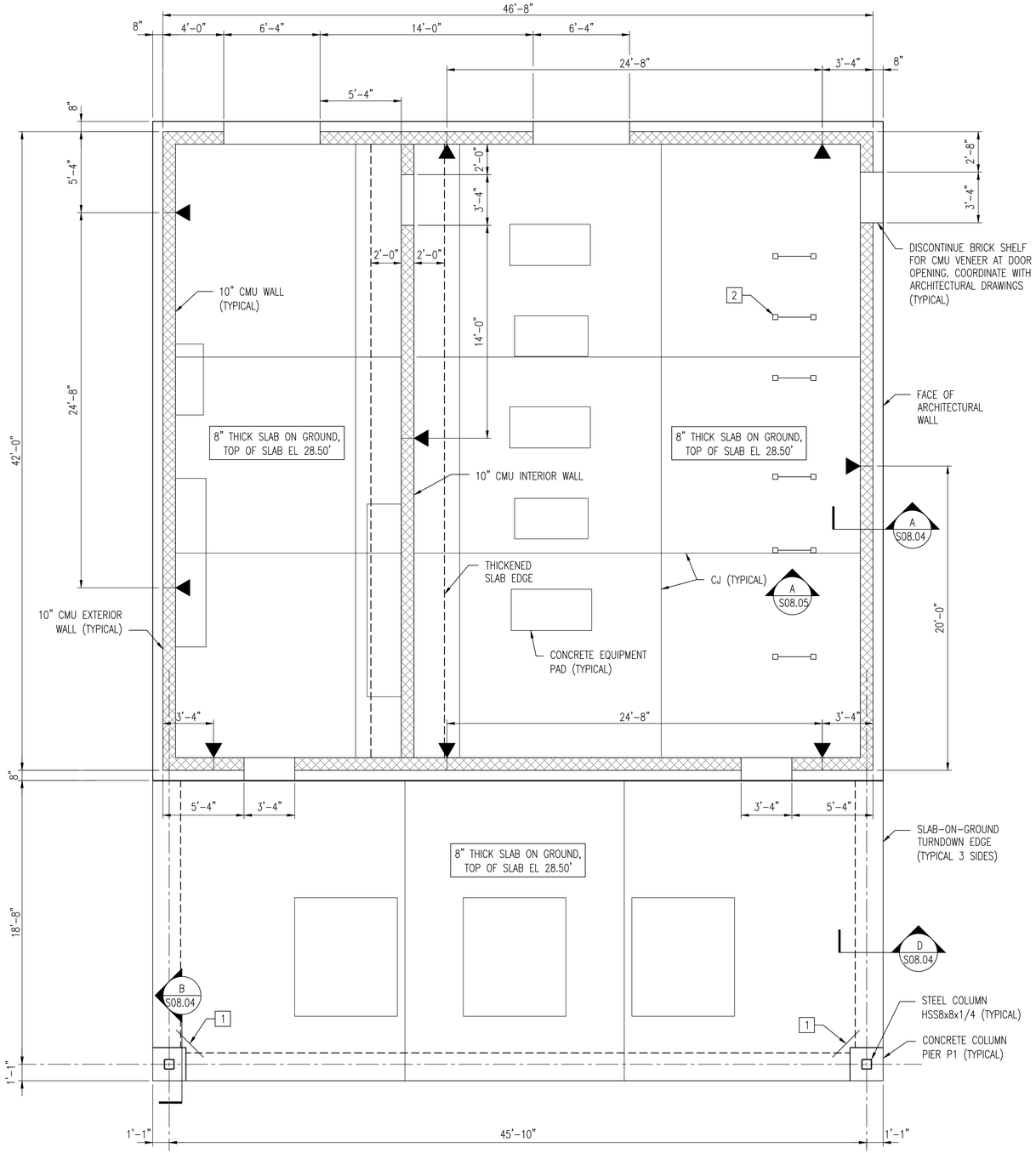

PUMP AND BLOWER BUILDING No 2 - FIRST FLOOR PLAN

SCALE: 1/4" = 1'-0"

GENERAL SHEET NOTES

1. SEE S00.01 AND S00.02 FOR GENERAL STRUCTURAL NOTES.
2. SEE S00.03 THROUGH S00.07 FOR TYPICAL STRUCTURAL DETAILS.
3. COORDINATE STRUCTURAL SHEETS WITH OTHER DISCIPLINES.
4. REFER TO ARCHITECTURAL, MECHANICAL, AND ELECTRICAL DRAWINGS FOR THE SIZES AND LOCATIONS OF EQUIPMENT PADS AND PEDESTALS, AS WELL AS EQUIPMENT-RELATED OPENINGS. REINFORCE AS REQUIRED BY TYPICAL DETAILS.
5. PROVIDE 8" SLAB-ON-GROUND WITH #4@12" REINFORCING EACH WAY.
6. PROVIDE 10" EXTERIOR CMU WALLS WITH #6@32" VERTICAL REINFORCING. PROVIDE A 10" INTERIOR CMU WALL WITH #5@48" VERTICAL REINFORCING.
7. CJ INDICATES REQUIRED CRACK CONTROL JOINT, WHICH MAY BE EITHER A CONSTRUCTION JOINT OR CONTRACTION JOINT PER TYPICAL DETAILS.
8. REFER TO PIPE RACK SUPPORT ELEVATION ON SHEET S08.05

SHEET KEYNOTES

1 ADDITIONAL 2-#4x2'-6" AT RE-ENTRANT CORNERS OF SLAB-ON-GROUND.

2 PIPE RACK, TYPICAL. COORDINATE LOCATIONS WITH MECHANICAL DRAWINGS AND ACTUAL EQUIPMENT FURNISHED. SPACING OF PIPE RACKS NOT TO EXCEED 7'-0".

LEGEND

▼ CMU VERTICAL CONTROL JOINT LOCATION.

REVISIONS		

CLIENT INFORMATION

SUSSEX COUNTY, DE ENGINEERING DEPARTMENT

INLAND BAYS RWF PHASE #2 EXPANSION: CONTRACT S19-10

KEY PLAN

GRAPHIC SCALES

0 2' 4' 8'

SCALE: 1/4" = 1'-0"

SIGNATURE

BRUCE A. EBERLY 12/7/18 No. 19271 DELAWARE PROFESSIONAL ENGINEER

Whitman, Requardt & Associates, LLP
801 South Caroline Street, Baltimore, Maryland 21231

PUMP AND BLOWER BUILDING NO.2 - FIRST FLOOR PLAN

DRAWING NO.

S08.02

SCALE: 1/4" = 1'-0"		
DATE: DEC. 2018	SHEET 90 OF 217	
DES: KEC	DRAWN: MKS	CHECK: BAE

PLOT DATE: 12/7/2018 10:45 PM PAGE SETUP: WRA-PDF C60X24 PLOT STYLE: WRA_2006CTB PAPER SIZE:ARCH FULL BLEED D (36.00 X 24.00 INCHES)

FILENAME: N:\14256-026\CADD\14256026S08-02.DWG
N:\14256-026\CADD\14256026S08-02.dwg

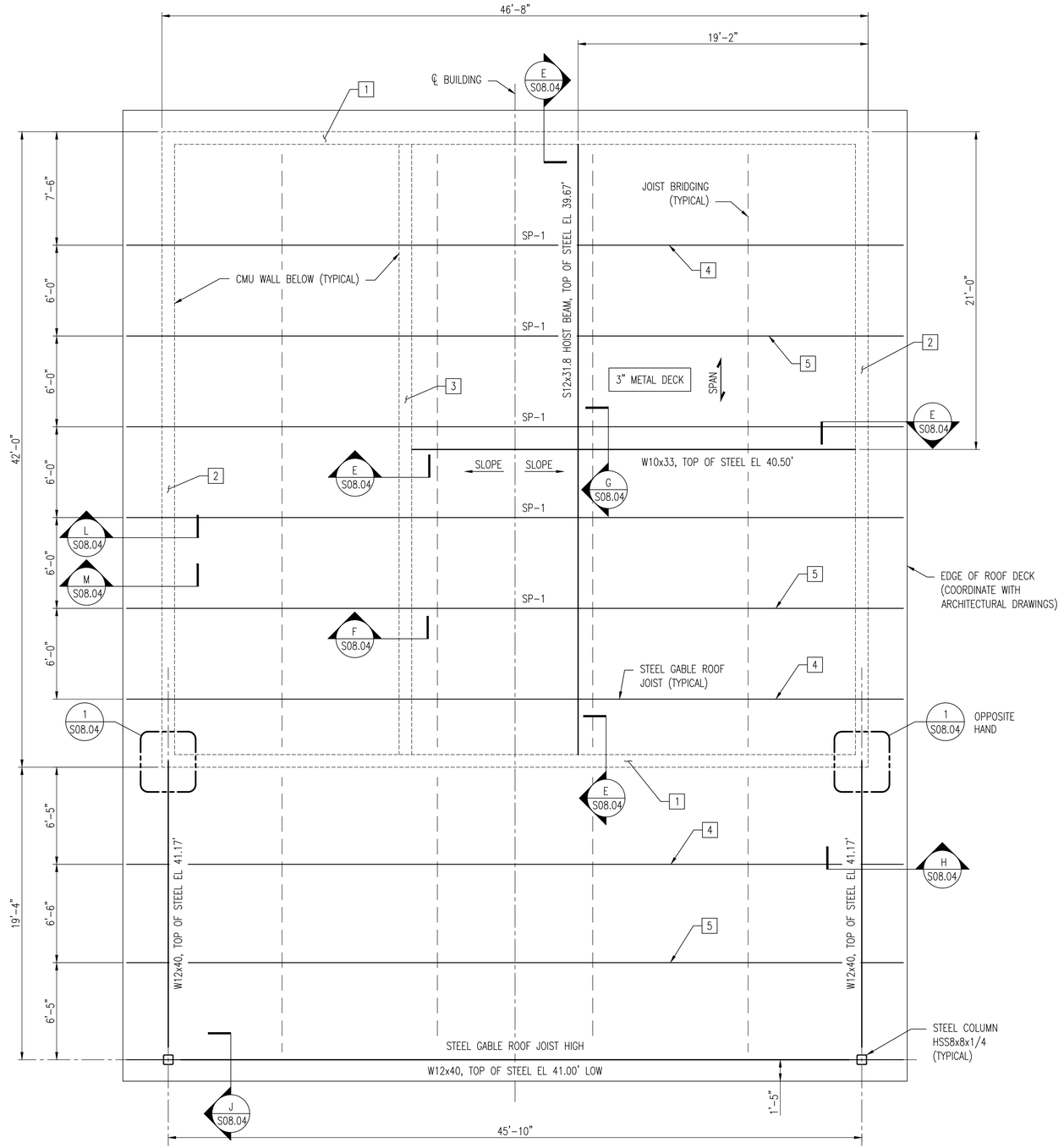

PUMP AND BLOWER BUILDING No 2 - ROOF FRAMING PLAN

SCALE: 1/4" = 1'-0"

GENERAL SHEET NOTES

1. SEE S00.01 AND S00.02 FOR GENERAL STRUCTURAL NOTES.
2. SEE S00.03 THROUGH S00.07 FOR TYPICAL STRUCTURAL DETAILS.
3. COORDINATE STRUCTURAL SHEETS WITH OTHER DISCIPLINES.

SHEET KEYNOTES

1. TOP OF CMU WALL AT UNDERSIDE OF ROOF DECK AND TOP OF EMBEDDED PLATE.
2. TOP OF CMU WALL EL 41.83' BETWEEN JOISTS. TOP OF CMU WALL EL 41.17' AT JOIST LOCATIONS.
3. TOP OF CMU WALL EL 40.83'.
4. PROVIDE NO CAMBER IN JOISTS ADJACENT TO CMU WALLS.
5. PROVIDE HALF STANDARD CAMBER IN JOISTS ADJACENT TO JOISTS WITH NO CAMBER.

LEGEND

SPAN	INDICATES SPAN DIRECTION OF METAL DECK.
SLOPE	INDICATES SLOPE DIRECTION FROM HIGH TO LOW ELEVATION.
SP-1	INDICATES JOIST WITH SPECIAL LOADING REQUIREMENTS. SEE SPECIAL JOIST LOADING DIAGRAM ON S08.05

JOIST LOADING TABLE (ASD)

CENTER DEPTH	JOIST TYPE	TOTAL LOAD	LIVE LOAD	UPLIFT
104"	GABLE	260 PLF	150 PLF	120 PLF

REVISIONS

CLIENT INFORMATION

SUSSEX COUNTY, DE
ENGINEERING
DEPARTMENT

INLAND BAYS RWF
PHASE #2 EXPANSION:
CONTRACT S19-10

KEY PLAN

GRAPHIC SCALES

0 2' 4' 8'

SCALE: 1/4" = 1'-0"

SIGNATURE

BRUCE A. ENSLIN
No. 19271
12/7/18
DELAWARE
PROFESSIONAL ENGINEER

Whitman, Requardt & Associates, LLP
801 South Caroline Street, Baltimore, Maryland 21231

PUMP AND BLOWER
BUILDING NO.2-ROOF FRAMING PLAN

DRAWING NO.

S08.03

SCALE: 1/4" = 1'-0"		
DATE: DEC. 2018	SHEET 91 OF 217	
DES: KEC	DRAWN: MKS	CHECK: BAE

PLOT DATE: 12/7/2018 10:25 PM PAGE SETUP: WRA-PDF C36X24 PLOT STYLE: WRA_2006.CTB PAPER SIZE:ARCH FULL BLEED D (36.00 X 24.00 INCHES)

FILENAME: N:\14256-026\CADD\14256085308-03.DWG
N:\14256-026\CADD\14256085308-03.dwg

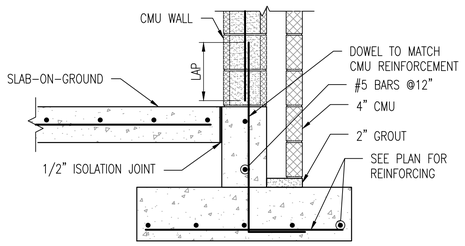

A S08.04 SECTION
SCALE: 3/4"=1'–0"
REF: S08.01, S08.02

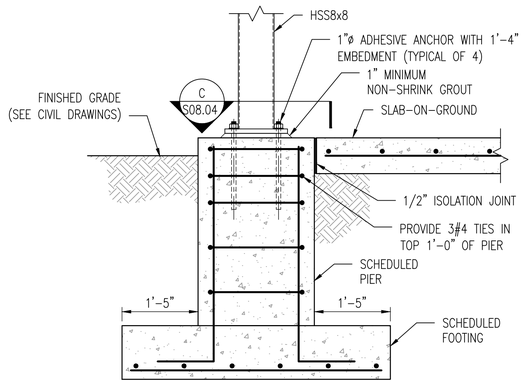

B S08.04 SECTION
SCALE: 3/4"=1'–0"
REF: S08.01, S08.02

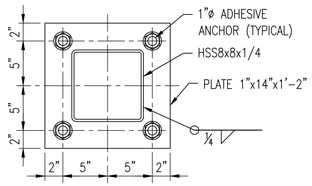

C S08.04 SECTION
SCALE: 1 1/2"=1'–0"
REF: S08.04

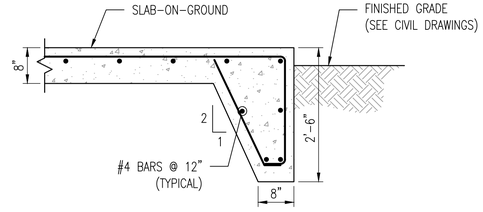

D S08.04 SECTION
SCALE: 3/4"=1'–0"
REF: S08.01, S08.02

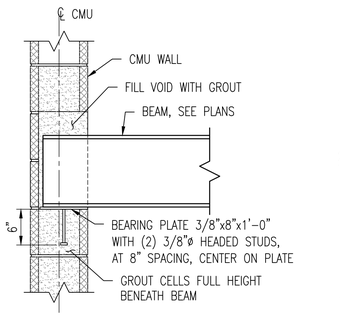

E S08.04 SECTION
SCALE: 1"=1'–0"
REF: S08.03

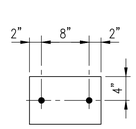

BEARING PLATE DETAIL

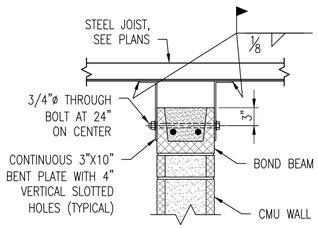

F S08.04 SECTION
SCALE: 1"=1'–0"
REF: S08.03

G S08.04 SECTION
SCALE: 1"=1'–0"
REF: S08.03

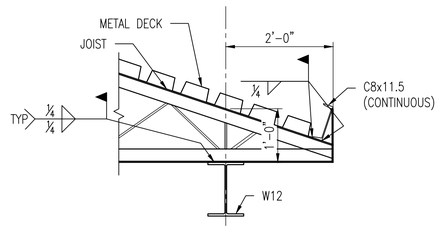

H S08.04 SECTION
SCALE: 3/4"=1'–0"
REF: S08.03

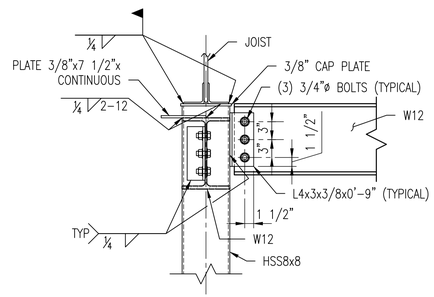

J S08.04 SECTION
SCALE: 1"=1'–0"
REF: S08.03

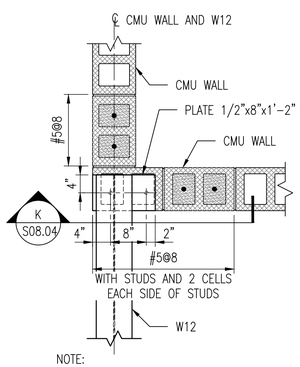

NOTE:
W12 TOP FLANGE AND CMU BOND BEAM NOT SHOWN FOR CLARITY.

1 S08.04 DETAIL
SCALE: 3/4"=1'–0"
REF: S08.03

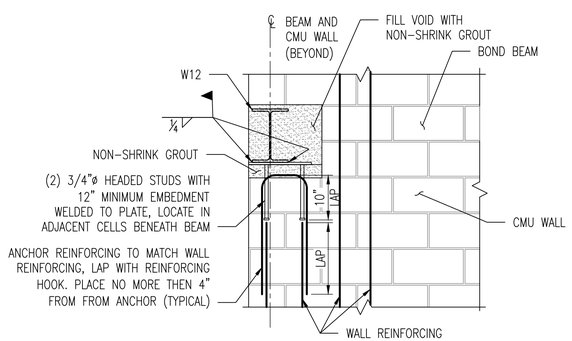

K S08.04 SECTION
SCALE: 3/4"=1'–0"
REF: S08.04

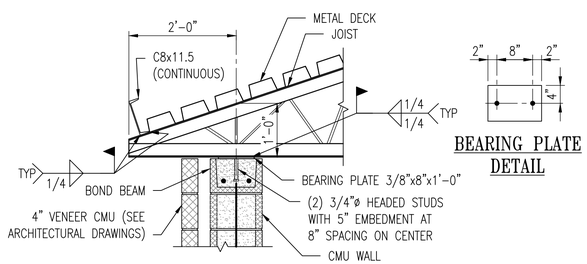

L S08.04 SECTION
SCALE: 3/4"=1'–0"
REF: S08.03

BEARING PLATE DETAIL

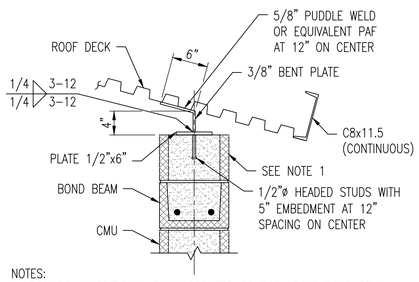

NOTES:
1. PROVIDE 1 ADDITIONAL FULLY GROUTED COURSE ABOVE BOND BEAM. PLACE ADDITIONAL CMU COURSES IN RUNNING BOND BETWEEN ADJACENT JOIST SEAT BEARING PLATES.
2. LENGTH OF 1/2" PLATE AND 3/8" BENT PLATE TO MATCH LENGTH OF ADDITIONAL CMU COURSES.
3. PROVIDE 12" WIDE, 16 GAUGE METAL PLATE TO SPAN DECK RIBS IF RIBS DO NOT ALIGN WITH BENT PLATE. FASTEN 16 GAUGE SHEET METAL PLATE TO ROOF DECK WITH (2) #8 SCREW AT 6" ON CENTER.

M S08.04 SECTION
SCALE: 1"=1'–0"
REF: S08.03

PLOT DATE: 12/7/2018 10:36 PM PAGE SETUP: \ORA-PSP C36X24D PLOT STYLE: \ORA_2006.CTB PAPER SIZE:ARCH FULL BLEED D (36.00 X 24.00 INCHES)
FILENAME: N:\14256-028\CADD\14256028308-04.DWG
N:\14256-028\CADD\14256028308-04.dwg

REVISIONS

CLIENT INFORMATION

SUSSEX COUNTY, DE
ENGINEERING
DEPARTMENT

INLAND BAYS RWF
PHASE #2 EXPANSION:
CONTRACT S19-10

KEY PLAN

GRAPHIC SCALES

0 1' 2' 3'
SCALE: 3/4" = 1'–0"
0 6" 1' 2'
SCALE: 1" = 1'–0"
0 4" 8" 16"
SCALE: 1 1/2" = 1'–0"

SIGNATURE



Whitman, Requardt & Associates, LLP
801 South Caroline Street, Baltimore, Maryland 21231

PUMP AND BLOWER
BUILDING NO.2–SECTIONS & DETAILS

DRAWING NO.

S08.04

SCALE: AS SHOWN		
DATE: DEC. 2018		SHEET 92 OF 217
DES: KEC	DRAWN: MKS	CHECK: BAE

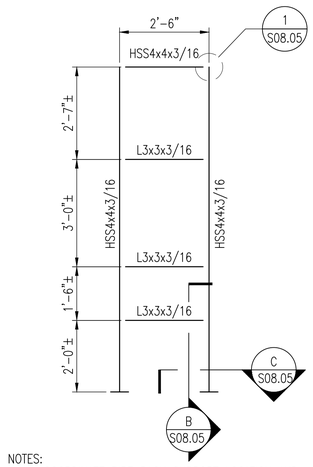

NOTES:

1. COORDINATE PIPE RACK SUPPORT LOCATION AND GEOMETRY WITH MECHANICAL DRAWINGS AND ACTUAL EQUIPMENT FURNISHED.
2. NUMBER OF ROWS OF SUPPORTS MAY VARY. PROVIDE HSS4X4X3/16 TOP BEAM FOR EACH RACK.

A S08.05 — PIPE RACK SUPPORT ELEVATION
SCALE: 1/2"=1'-0"
REF: S08.02

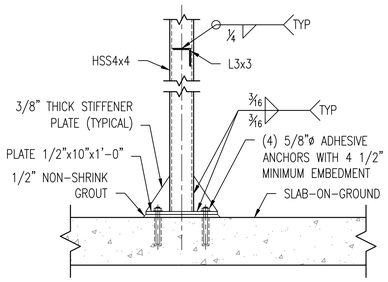

B S08.05 — SECTION
SCALE: 1"=1'-0"
REF: S08.05

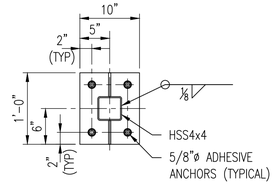

C S08.05 — SECTION
SCALE: 1"=1'-0"
REF: S08.05

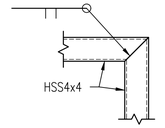

1 S08.05 — DETAIL
SCALE: 1"=1'-0"
REF: S08.05

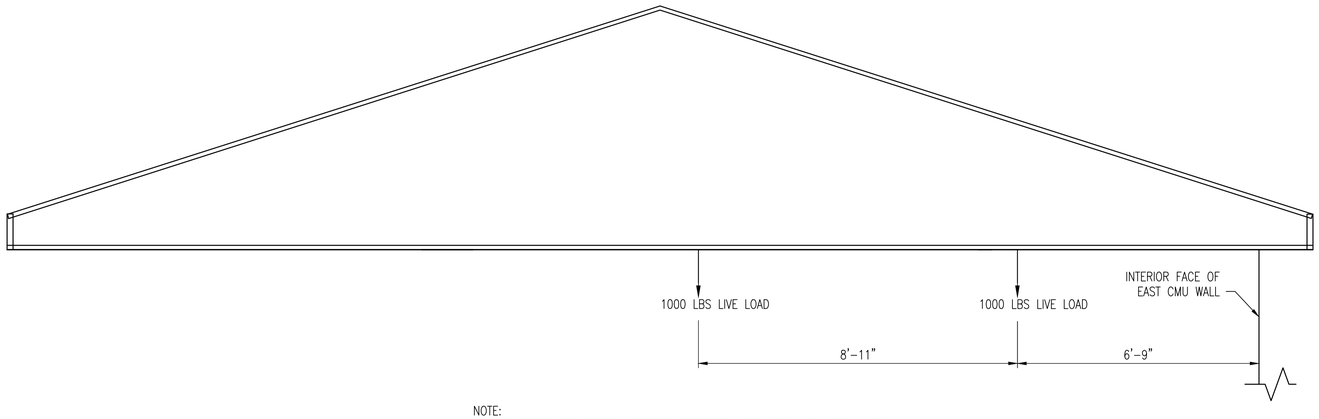

NOTE:
COORDINATE EXACT LOCATION OF PIPE SUPPORTS WITH MECHANICAL DRAWINGS.

D S08.05 — SPECIAL JOIST LOADING DIAGRAM
NOT TO SCALE
REF: S08.03

REVISIONS

CLIENT INFORMATION

SUSSEX COUNTY, DE
ENGINEERING
DEPARTMENT

INLAND BAYS RWF
PHASE #2 EXPANSION:
CONTRACT S19-10

KEY PLAN

GRAPHIC SCALES

0 1' 2' 4'
SCALE: 1/2" = 1'-0"
0 6" 1' 2'
SCALE: 1" = 1'-0"

SIGNATURE



Whitman, Requardt & Associates, LLP
801 South Caroline Street, Baltimore, Maryland 21231

PUMP AND BLOWER
BUILDING NO.2-SECTIONS & DETAILS

DRAWING NO.
S08.05

SCALE: AS SHOWN		
DATE: DEC. 2018		SHEET 93 OF 217
DES: KEC	DRAWN: MKS	CHECK: BAE

PLOT DATE: 12/7/2018 1:09:45 PM PAGE SETUP: WRA-PDF (36X24) PLOT STYLE: WRA_2006.CTB PAPER SIZE:ARCH FULL BLEED D (36.00 X 24.00 INCHES)
FILENAME: N:\14256-026\CADD\14256026S08-05.DWG
N:\14256-026\CADD\14256026S08-05.dwg

GENERAL SHEET NOTES

1. SEE S00.01 AND S00.02 FOR GENERAL STRUCTURAL NOTES.
2. SEE S00.03 THROUGH S00.07 FOR TYPICAL STRUCTURAL DETAILS.
3. REFER TO ARCHITECTURAL, MECHANICAL, AND ELECTRICAL DRAWINGS FOR THE SIZES AND LOCATIONS OF EQUIPMENT. REINFORCE ANY REQUIRED OPENINGS PER TYPICAL DETAIL.

LEGEND

→ INDICATES DIRECTION OF NON-SHRINK GROUT SLOPE.

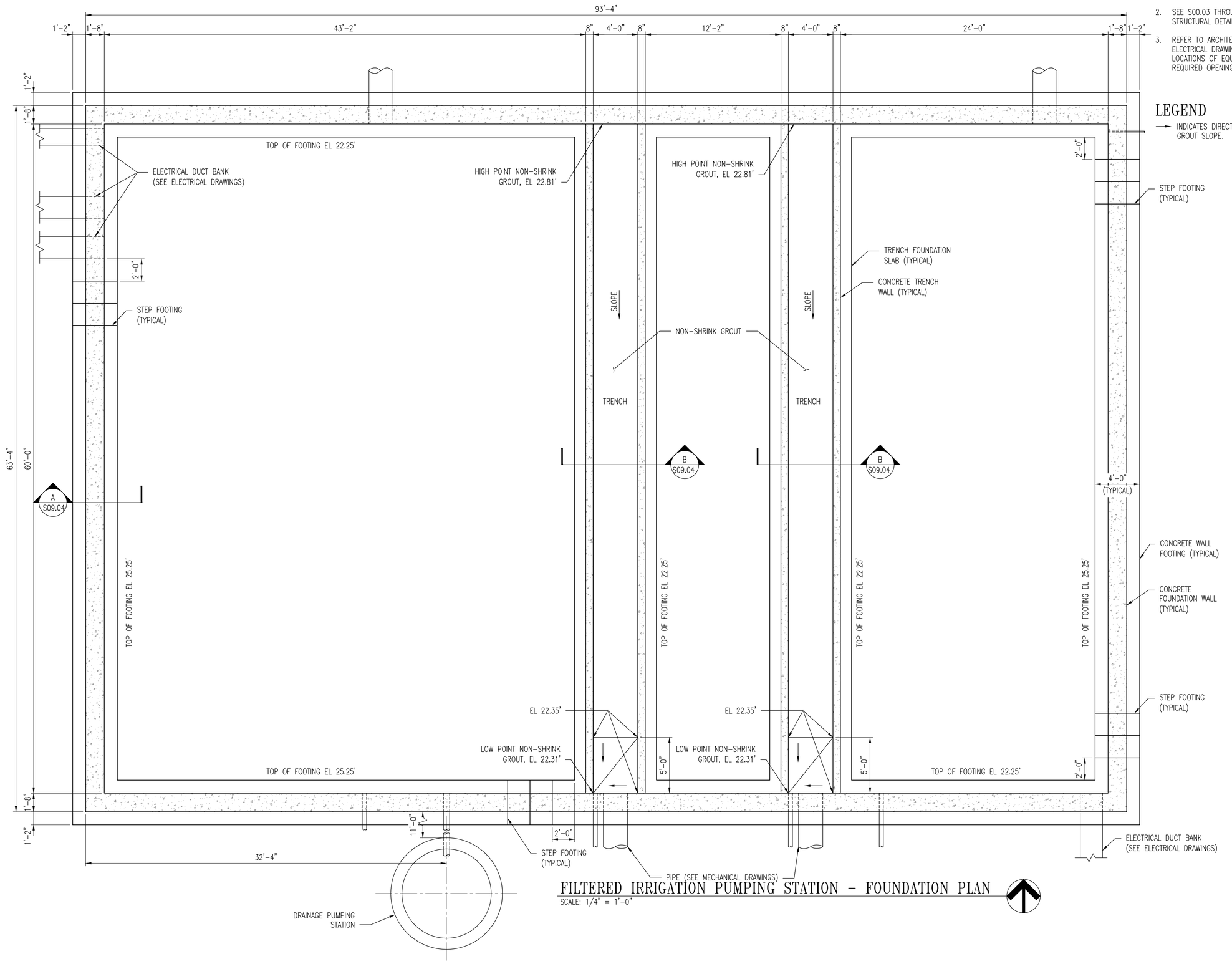

FILTERED IRRIGATION PUMPING STATION - FOUNDATION PLAN

SCALE: 1/4" = 1'-0"

REVISIONS		

CLIENT INFORMATION

SUSSEX COUNTY, DE
ENGINEERING
DEPARTMENT

INLAND BAYS RWF
PHASE #2 EXPANSION:
CONTRACT S19-10

KEY PLAN

GRAPHIC SCALES

0 2' 4' 8'

SCALE: 1/4" = 1'-0"

SIGNATURE

BRUCE A. ENGLE
No. 19271
7/3/19
DELAWARE
PROFESSIONAL ENGINEER

WRA
Whitman, Requardt & Associates, LLP
801 South Caroline Street, Baltimore, Maryland 21231

FILTERED IRRIGATION PUMPING STATION - FOUNDATION PLAN

DRAWING NO.

S09.01

SCALE: 1/4" = 1'-0"		
DATE: JULY 2019	SHEET 94 OF 217	
DES: KEC	DRAWN: MKS	CHECK: BAE

PLOT DATE: 7/10/2019 9:08:43 AM PAGE SETUP: WRA-PDF C36X24) PLOT STYLE: WRA_2006.CTB PAPER SIZE:ARCH FULL BLEED D (36.00 X 24.00 INCHES)

FILENAME: N:\14256-000\LDD\14256026509-01.DWG
N:\14256-026\ZADD\14256026509-01.dwg

GENERAL SHEET NOTES

1. SEE S00.01 AND S00.02 FOR GENERAL STRUCTURAL NOTES.
2. SEE S00.03 THROUGH S00.07 FOR TYPICAL STRUCTURAL DETAILS.
3. REFER TO ARCHITECTURAL, MECHANICAL, AND ELECTRICAL DRAWINGS FOR THE SIZES AND LOCATIONS OF EQUIPMENT PADS AND PEDESTALS, AS WELL AS EQUIPMENT-RELATED OPENINGS. REINFORCE AS REQUIRED BY TYPICAL DETAILS.
4. PROVIDE 8" SLAB-ON-GROUND WITH #4@12" REINFORCING EACH WAY.
5. PROVIDE 12" EXTERIOR CMU WALLS WITH #6@32" VERTICAL REINFORCING. PROVIDE 12" INTERIOR CMU WALLS WITH #5@48" VERTICAL REINFORCING.
6. CJ INDICATES REQUIRED CRACK CONTROL JOINT, WHICH MAY BE EITHER A CONSTRUCTION JOINT OR CONTRACTION JOINT PER TYPICAL DETAILS.
7. GRATING SPANS BETWEEN TRENCH WALLS (TYPICAL).

LEGEND

▼ CMU VERTICAL CONTROL JOINT LOCATION.

SPAN ↔ INDICATES SPAN DIRECTION OF GRATING.

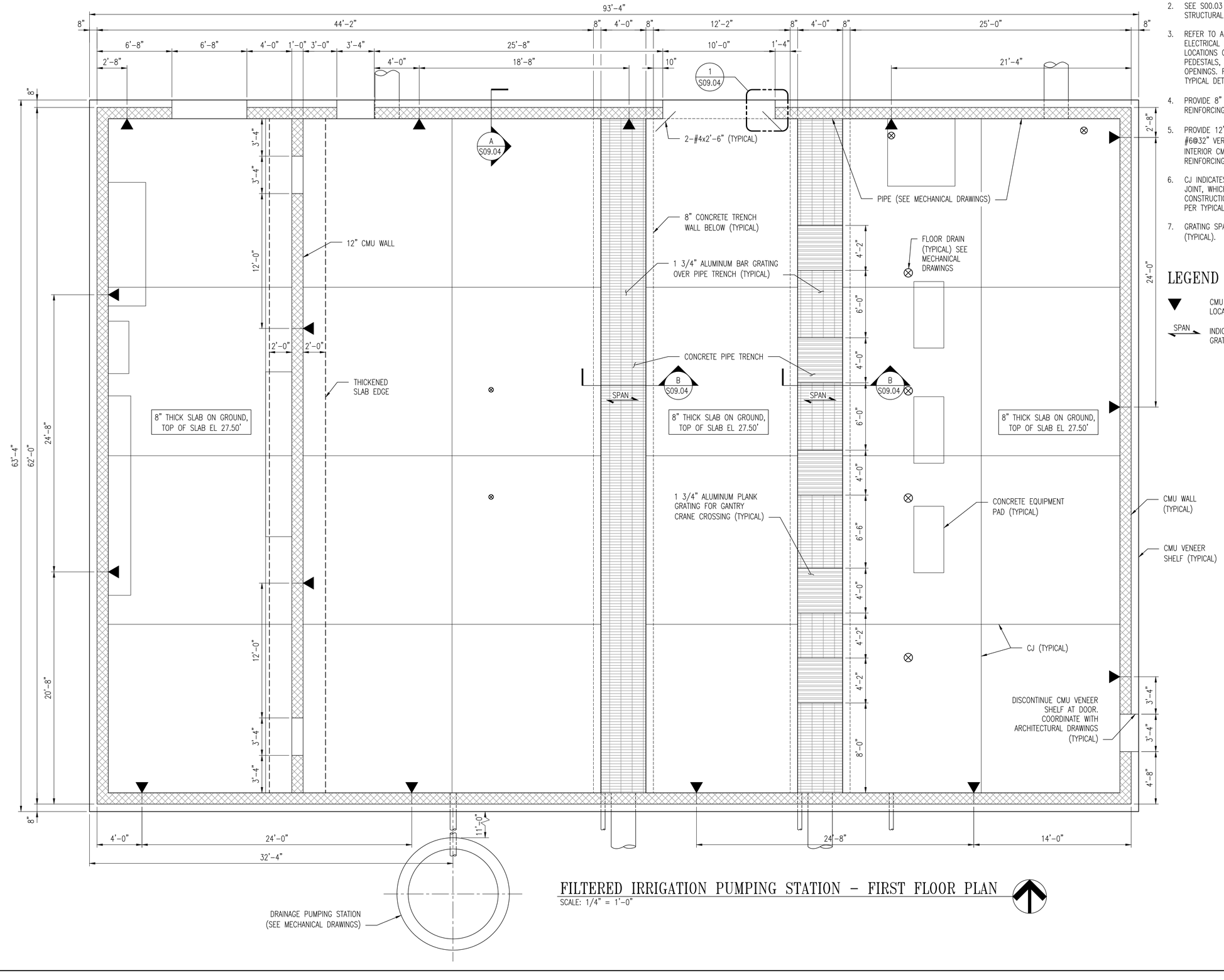

FILTERED IRRIGATION PUMPING STATION - FIRST FLOOR PLAN

SCALE: 1/4" = 1'-0"

REVISIONS		

CLIENT INFORMATION

SUSSEX COUNTY, DE ENGINEERING DEPARTMENT

INLAND BAYS RWF PHASE #2 EXPANSION: CONTRACT S19-10

KEY PLAN

GRAPHIC SCALES

0 2' 4' 8'

SCALE: 1/4" = 1'-0"

SIGNATURE

BRUCE A. ENGLE LICENSED No. 19271 7/3/19 DELAWARE PROFESSIONAL ENGINEER

Whitman, Requardt & Associates, LLP
801 South Caroline Street, Baltimore, Maryland 21231

FILTERED IRRIGATION PUMPING STATION - FIRST FLOOR PLAN

DRAWING NO.

S09.02

SCALE: 1/4" = 1'-0"		
DATE: JULY 2019	SHEET 95 OF 217	
DES: KEC	DRAWN: MKS	CHECK: BAE

PLOT DATE: 7/10/2019 9:08:46 AM PAGE SETUP: VRA-PDF (36X24) PLOT STYLE: VRA_2006.CTB PAPER SIZE:ARCH FULL BLEED D (36.00 X 24.00 INCHES)

FILENAME: N:\14256-SERVICES\14256026S09-02.DWG
N:\14256-026\CADD\14256026S09-02.dwg

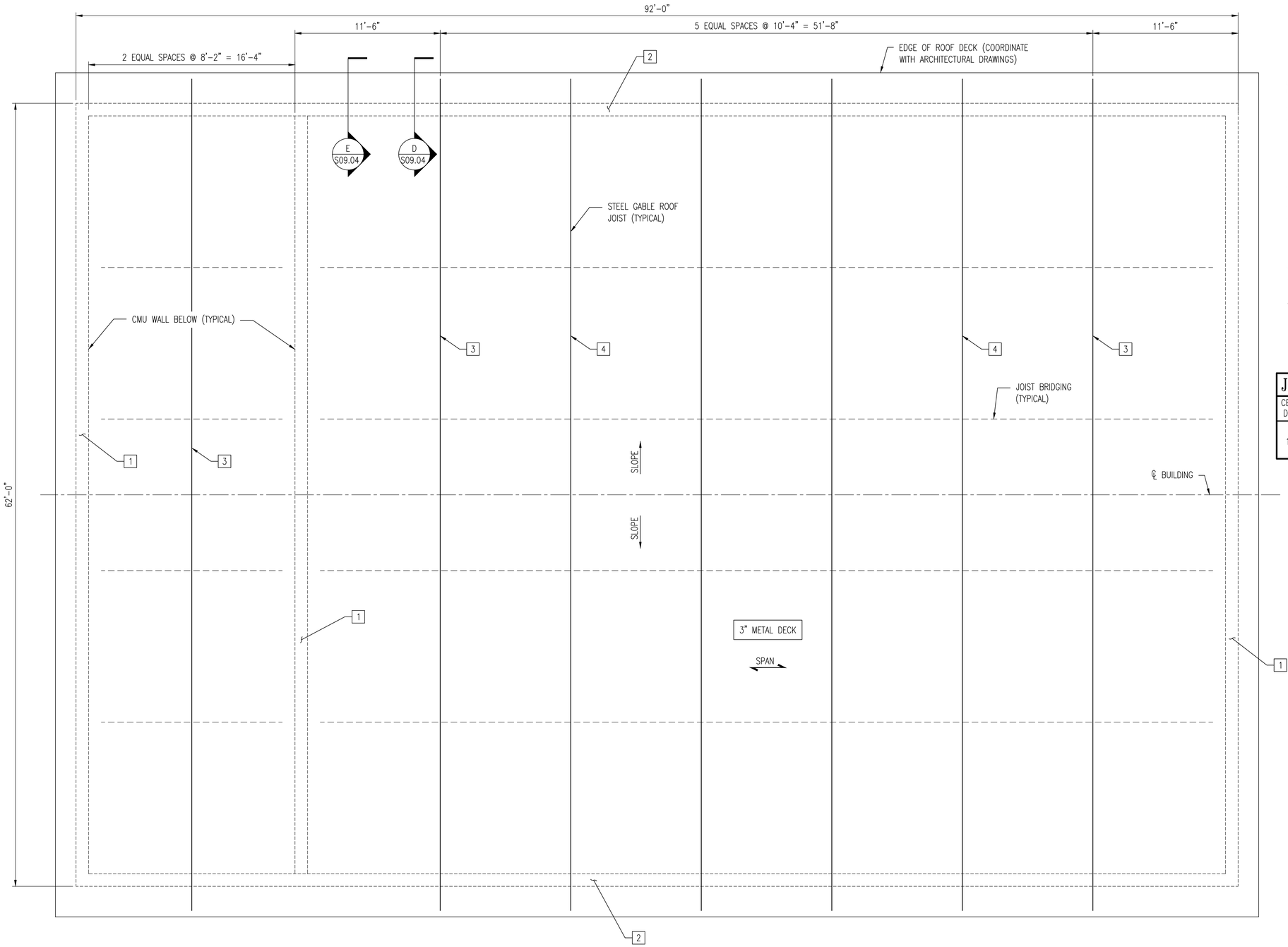

FILTERED IRRIGATION PUMPING STATION – ROOF FRAMING PLAN

SCALE: 1/4" = 1'-0"

GENERAL SHEET NOTES

1. SEE S00.01 AND S00.02 FOR GENERAL STRUCTURAL NOTES.
2. SEE S00.03 THROUGH S00.07 FOR TYPICAL STRUCTURAL DETAILS.

SHEET KEYNOTES

1. TOP OF CMU WALL AT UNDERSIDE OF ROOF DECK AND TOP OF EMBEDDED PLATE.
2. TOP OF CMU WALL EL 44.17' BETWEEN JOISTS. TOP OF CMU WALL EL 43.50' AT JOIST LOCATIONS.
3. PROVIDE NO CAMBER IN JOISTS ADJACENT TO CMU WALLS.
4. PROVIDE HALF STANDARD CAMBER IN JOISTS ADJACENT TO JOISTS WITH NO CAMBER.

LEGEND

SPAN — SPAN INDICATES DIRECTION OF METAL DECK.

JOIST LOADING TABLE (ASD)

CENTER DEPTH	JOIST TYPE	TOTAL LOAD	LIVE LOAD	UPLIFT
134"	GABLE	410 PLF	230 PLF	160 PLF

REVISIONS

CLIENT INFORMATION

SUSSEX COUNTY, DE
ENGINEERING
DEPARTMENT

INLAND BAYS RWF
PHASE #2 EXPANSION:
CONTRACT S19-10

KEY PLAN

GRAPHIC SCALES

0 2' 4' 8'

SCALE: 1/4" = 1'-0"

SIGNATURE

BRUCE A. ENGLE
No. 19271
12/7/18
DELAWARE
PROFESSIONAL ENGINEER

Whitman, Requardt & Associates, LLP
801 South Caroline Street, Baltimore, Maryland 21231

FILTERED IRRIGATION
PUMPING STATION-ROOF FRAMING PLAN

DRAWING NO.

S09.03

SCALE: 1/4" = 1'-0"		
DATE: DEC. 2018	SHEET 96 OF 217	
DES: KEC	DRAWN: MKS	CHECK: BAE

PLOT DATE: 12/7/2018 12:01:14 PM PAGE SETUP: WRA-PSF (36X24) PLOT STYLE: WRA_2006.CTB PAPER SIZE:ARCH FULL BLEED D (36.00 X 24.00 INCHES)
FILENAME: N:\14256-026\CADD\14256026S09-03.DWG
N:\14256-026\CADD\14256026S09-03.dwg

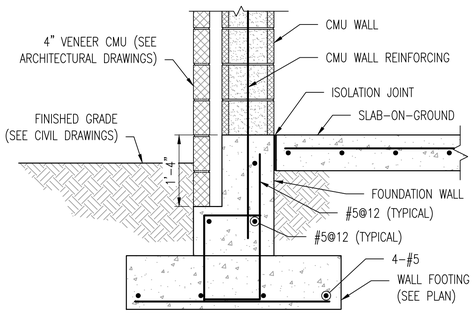

A S09.04 SECTION
SCALE: 3/4"=1'-0"
REF: S09.01, S09.02

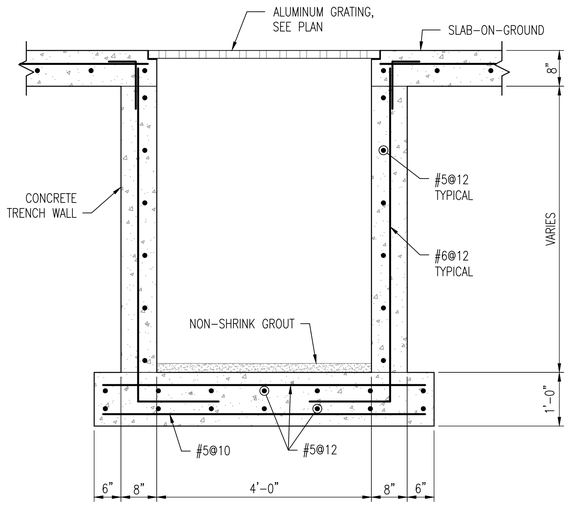

B S09.04 SECTION
SCALE: 3/4"=1'-0"
REF: S09.01, S09.02

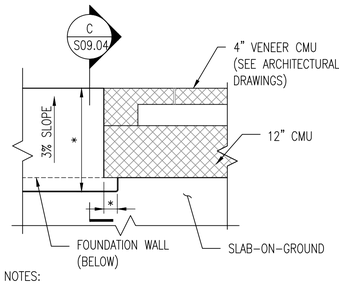

NOTES:
* COORDINATE DIMENSIONS "*" WITH ARCHITECTURAL DRAWINGS AND OVERHEAD DOOR MANUFACTURER.

1 S09.04 DETAIL
SCALE: 3/4"=1'-0"
REF: S09.02

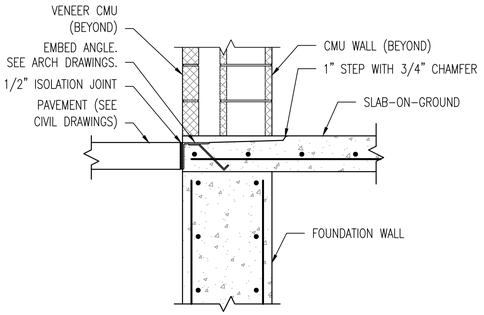

C S09.04 SECTION
SCALE: 3/4"=1'-0"
REF: S09.04

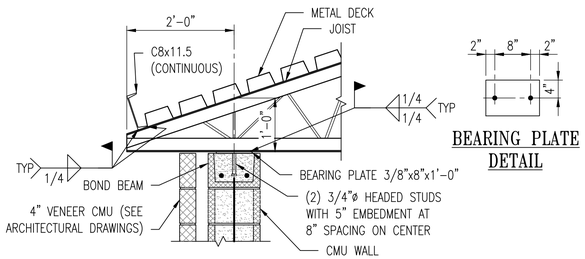

BEARING PLATE DETAIL

D S09.04 SECTION
SCALE: 3/4"=1'-0"
REF: S09.03

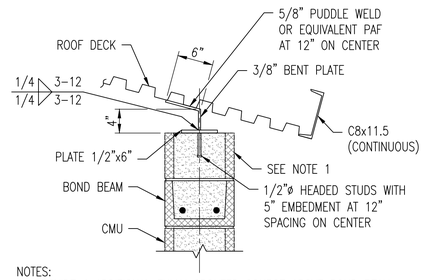

NOTES:
1. PROVIDE 1 ADDITIONAL FULLY GROUTED COURSE ABOVE BOND BEAM. PLACE ADDITIONAL CMU COURSES IN RUNNING BOND BETWEEN ADJACENT JOIST SEAT BEARING PLATES.
2. LENGTH OF 1/2" PLATE AND 3/8" BENT PLATE TO MATCH LENGTH OF ADDITIONAL CMU COURSES.
3. PROVIDE 12" WIDE, 16 GAUGE METAL PLATE TO SPAN DECK RIBS IF RIBS DO NOT ALIGN WITH BENT PLATE. FASTEN 16 GAUGE SHEET METAL PLATE TO ROOF DECK WITH (2) #8 SCREW AT 6" ON CENTER.

E S09.04 SECTION
SCALE: 1"=1'-0"
REF: S09.03

REVISIONS

CLIENT INFORMATION

SUSSEX COUNTY, DE
ENGINEERING
DEPARTMENT

INLAND BAYS RWF
PHASE #2 EXPANSION:
CONTRACT S19-10

KEY PLAN

GRAPHIC SCALES

0 1' 2' 3'
SCALE: 3/4" = 1'-0"

0 6" 1' 2'
SCALE: 1" = 1'-0"

SIGNATURE

BRUCE A. ENGLE
LICENSED
No. 19271
7/3/19
DELAWARE
PROFESSIONAL ENGINEER

Whitman, Requardt & Associates, LLP
801 South Caroline Street, Baltimore, Maryland 21231

FILTERED IRRIGATION
PUMPING STATION-SECTIONS & DETAILS

DRAWING NO.

S09.04

SCALE: AS SHOWN		
DATE: JULY 2019	SHEET 97 OF 217	
DES: KEC	DRAWN: MKS	CHECK: BAE

PLOT DATED: 7/10/2019 9:08:49 AM PAGE SETUP: WRA-PDF (36X24) PLOT STYLE: WRA_2006.CTB PAPER SIZE:ARCH FULL BLEED D (36.00 X 24.00 INCHES)
FILENAME: N:\14256-005\DAD\14256026S09-24.DWG
N:\14256-026\(AUD)\14256026S09-04.dwg

GENERAL NOMENCLATURE

ABBREVIATION	DESCRIPTION
ADF	AVERAGE DAILY FLOW
ARV	AIR RELIEF VALVE
ASTM	AMERICAN STANDARD FOR TESTING MATERIALS
BLDG	BUILDING
BFV	BUTTERFLY VALVE
CFM	CUBIC FEET PER MINUTE
CI	CAST IRON
CL OR ℄	CENTER LINE
CP	CONTROL PANEL
CV	CHECK VALVE
CYD	CUBIC YARD
DEG	DEGREES
DI	DIGITAL INPUT
D.I.	DUCTILE IRON
DIA	DIAMETER
DIP	DUCTILE IRON PIPE
DN	DOWN
DO	DISSOLVED OXYGEN
EL.	ELEVATION
ENGR	ENGINEER
ENT	ENTRANCE
EQ	EQUALIZATION
EX.	EXISTING
FD	FLOOR DRAIN
F.C.	FLUSHING CONNECTION
FLG	FLANGE
FM	FORCE MAIN
FOB	FLAT ON BOTTOM
FOT	FLAT ON TOP
FPM	FEET PER MINUTE
FPS	FEET PER SECOND
FT	FEET
GPD	GALLONS PER DAY
GPH	GALLONS PER HOUR
GPM	GALLONS PER MINUTE
GV	GATE VALVE
HP	HORSEPOWER
H.P.	HIGH POINT
HWL	HIGH WATER LEVEL
HZ	HERTZ
I.D.	INSIDE DIAMETER
INV.	INVERT
KW	KILOWATT
LB/LBS	POUND/POUNDS
LBS/HR	POUNDS PER HOUR
LWL	LOW WATER LEVEL
MAX	MAXIMUM
MGD	MILLION GALLONS PER DAY
MIN	MINIMUM
MJ	MECHANICAL JOINT
N.C.	NORMALLY CLOSED
N.O.	NORMALLY OPEN
NTS	NOT TO SCALE
OD	OUTSIDE DIAMETER
PE	PLAIN END
PPD	POUNDS PER DAY
PPM	PARTS PER MILLION
PSI	POUNDS PER SQUARE INCH
PSIG	POUNDS PER SQUARE INCH GAUGE
PV	PLUG VALVE
PVC	POLYVINYL CHLORIDE
RED	REDUCER/REDUCING
R.J.	RESTRAINED JOINT
RPM	REVOLUTIONS PER MINUTE
RVSS	REDUCED VOLTAGE SOLID STATE
SCH	SCHEDULE
SHT	SHEET
S.P.	STATIC PRESSURE
S.S.	STAINLESS STEEL
TDH	TOTAL DYNAMIC HEAD
T/S	TOP OF SLAB
TYP.	TYPICAL
VFD	VARIABLE FREQUENCY DRIVE
W.L.	WATER LEVEL

STRUCTURE/BUILDING/AREA DESIGNATION

ABBREVIATION	DESCRIPTION
NHW	NORTH HEADWORKS
GF	GRIT FACILITY
ADB	AERATION DISTRIBUTION BOX
AL	AERATED LAGOONS
CDS	CLARIFIER DISTRIBUTION STRUCTURE
SC	SECONDARY CLARIFIERS
SPS2	SCUM PUMPING STATION 2
PBB	PUMP & BLOWER BUILDING
PBB2	PUMP & BLOWER BUILDING 2
FIPS	FILTERED IRRIGATION PUMP STATION
CCT	CHLORINE CONTACT TANK
SHF	SODIUM HYPOCHLORITE FACILITY
FF	FILTRATION FACILITY

HEATING AND VENTILATION NOMENCLATURE

ABBREVIATION	DESCRIPTION
BDD	BACKDRAFT DAMPER
B	BELT DRIVE
BTUH	BRITISH THERMAL UNITS PER HOUR
C	CELSIUS
CB	CENTRIFUGAL BLOWER
CE	CEILING EXHAUST
CFM	CUBIC FEET PER MINUTE
D	DIRECT DRIVE
EDB	ENTERING DRY BULB TEMPERATURE
EWB	ENTERING WET BULB TEMPERATURE
EA	EXHAUST AIR
F	FAHRENHEIT
FPM	FEET PER MINUTE
GD	GRAVITY DAMPER, COUNTER-BALANCED
KW	KILOWATT
LDB	LEAVING DRY BULB TEMPERATURE
LWB	LEAVING WET BULB TEMPERATURE
P	PROPELLER, WALL MOUNTED
RA	RETURN AIR
RD	RETURN DIFFUSER
RE	ROOF EXHAUST
FRG	FILTERED RETURN GRILLE
RG	RETURN GRILLE
RS	ROOF SUPPLY
SA	SUPPLY AIR
SD	SUPPLY DIFFUSER
SG	SUPPLY GRILLE
MBH	THOUSANDS OF BRITISH THERMAL UNITS PER HOUR

EQUIPMENT ABBREVIATIONS

ABBREVIATION	DESCRIPTION
AE	AERATOR
CMP	CHEMICAL MIXING PUMP
RS	RETURN SLUDGE PUMP
WS	WASTE SLUDGE PUMP
SHP	SODIUM HYPOCHLORITE PUMP
SFP	SLUDGE FEED PUMP
SP	SCUM PUMP
CV	SLUDGE CONVEYOR
SM	SUBMERSIBLE MIXER
EP	EFFLUENT PUMP
IP	IRRIGATION PUMP
FE	FLOW METER
DP	DRAINAGE PUMP
DO	DISSOLVED OXYGEN PROBE
DC	DAVIT CRANE
H	HOIST
RP	RECYCLE PUMP
PFP	POLYMER FEED PUMP
MS	MECHANICAL SCREEN
SC	SCREENING CONVEYOR
GT	GRIT TANK
GP	GRIT PUMP
GW	GRIT WASHER
GA	GRIT AGITATOR

FLOW STREAM IDENTIFIERS

ABBREVIATION	DESCRIPTION
ALE	AERATED LAGOON EFFLUENT
FT	FILTRATE
PW	POTABLE WATER
RAS	RETURN ACTIVATED SLUDGE
SD	SANITARY DRAIN/SEWER
UT	UTILITY WATER
WAS	WASTE ACTIVATED SLUDGE
WSD	WASTE SLUDGE DECANT

PLUMBING NOMENCLATURE

ABBREVIATION	DESCRIPTION
CW	COLD WATER
FCO-x	FLOOR CLEAN OUT
FD-x	FLOOR DRAIN
GD	GUTTER DRAIN
HB	HOSE BIBB
HD	HUB DRAIN
HR	HOSE RACK
HV	HOSE VALVE
NFWH	NON FREEZE WALL HYDRANT
ORD	OVERFLOW ROOF DRAIN
RD	ROOF DRAIN
TD	TRENCH DRAIN
VTR	VENT THROUGH ROOF

PLUMBING SYMBOLS

SYMBOL	DESCRIPTION
	NON FREEZE WALL HYDRANT
	HOSE BIBB
	HOSE RACK
	COLD WATER
	FLOOR DRAIN

SYMBOL	DESCRIPTION
	FLOOR CLEAN OUT
	HUB DRAIN
	GUTTER DRAIN
	ROOF DRAIN
	OVERFLOW ROOF DRAIN
	TRENCH DRAIN
	VENT THROUGH ROOF

MAJOR EQUIPMENT LIST

ABBREVIATION	DESCRIPTION
NHW-MS-101, NHW-MS-102	MECHANICAL SCREENS
NHW-SC-101	SCREENINGS CONVEYOR
GF-GT-101, GF-GT-102	GRIT TANK
GF-GP-101, GF-GP-102	GRIT PUMPS
GF-GW-101, GF-GW-102	GRIT WASHERS
ADB-SM-101, ADB-SM-102	SUBMERSIBLE MIXERS
AL-MBFV-230, AL-MBFV-231, AL-MBFV-232, AL-MBFV-233, AL-MBFV-234, AL-MBFV-235, AL-MBFV-236, AL-MBFV-237, AL-MBFV-238, AL-MBFV-240, AL-MBFV-241, AL-MBFV-242, AL-MBFV-243, AL-MBFV-244, AL-MBFV-245, AL-MBFV-246, AL-MBFV-247, AL-MBFV-248,	AERATED LAGOON MOTOR ACTUATED BUTTERFLY VALVES
AL-DO-901, AL-DO-902	DISSOLVED OXYGEN PROBES
AL-FE-243, AL-FE-244	AERATION LAGOON AIR FLOW METERS
SC-CD-403, SC-CD-404	SECONDARY CLARIFIER DRIVES
SPS2-SCP-101, SPS2-SCP-102	SCUM PUMPS
PBB-B-624, PBB-B-625	PROCESS BLOWERS
PBB2-WS-101, PBB2-WS-102	WASTE SLUDGE PUMPS
PBB2-RS-101, PBB2-RS-102, PBB2-RS-103	RETURN SLUDGE PUMPS
FIPS-IP-101, FIPS-IP-102, FIPS-IP-103	IRRIGATION PUMPS
FF-F-101, FF-F-102, FF-F-103 FF-F-104	FILTERS
FIPS-CMP-101, FIPS-CMP-102	CHEMICAL METERING PUMPS
SHF-SHP-904, SHF-SHP-905	CHEMICAL METERING PUMPS
CCT-FE-102	FLOW METER
CCT-IP-813	INTERMEDIATE VERTICAL PROPELLER PUMP

GENERAL NOTES

1. UNLESS OTHERWISE NOTED, ALL PIPING PASSING THRU FLOORS AND WALLS SHALL BE SLEEVED AND SEALED WITH A SEGMENTED RUBBER COMPRESSION SEAL.
2. UNLESS OTHERWISE NOTED, WALL CASTINGS SHALL HAVE A WATERSTOP/THRUST COLLAR POSITIONED IN THE CENTER OF THE WALL. SEE TYPICAL DETAILS FOR WALL CASTING CONFIGURATION.
3. PIPING CONNECTIONS 3" AND SMALLER HAVE BEEN SCHEMATICALLY SHOWN ON PLAN DRAWINGS. THE CONTRACTOR SHALL BE RESPONSIBLE FOR DETAILED PIPE ROUTING AND ALL APPURTENANCES IN ACCORDANCE WITH RESPECTIVE SCHEMATICS. CONTRACTOR SHALL PROVIDE ALL NECESSARY FITTINGS TO MAKE CONNECTIONS.
4. ALL EXPANSION JOINTS, FLANGE ADAPTERS AND FLEXIBLE COUPLINGS SHALL HAVE TIE-RODS TO SUIT AS SHOWN ON TYPICAL DETAILS.
5. MINIMUM SLOPE FOR DRAINS SHALL BE $\frac{1}{8}$" PER LINEAR FOOT UNLESS OTHERWISE NOTED.
6. ALL DUCTILE IRON PIPING INTERNAL TO FACILITY SHALL HAVE FLANGED FITTINGS UNLESS OTHERWISE NOTED.
7. VALVES ARE NORMALLY OPEN (N.O.) UNLESS NOTED AS NORMALLY CLOSED (N.C.)
8. CONTRACTOR SHALL COORDINATE THE LOCATION OF VALVE SUPPORTS SO THAT ACCESS TO THE VALVE BEARING(S) IS NOT RESTRICTED.
9. UNLESS OTHERWISE NOTED, ALL EQUIPMENT SHALL BE PROVIDED WITH A MINIMUM 4-INCH CONCRETE HOUSEKEEPING PAD SIZED TO SUIT EQUIPMENT.
10. SEE STRUCTURAL DRAWINGS FOR CONCRETE PIPE SUPPORT AND PEDESTAL DETAILS.
11. LOUVER MOUNTED EQUIPMENT SHALL BE MOUNTED TO WALL PANELS AS DETAILED. OTHER EQUIPMENT, PIPING AND DUCTWORK SHALL NOT BE ATTACHED TO PRECAST WALL PANELS.
12. UNLESS OTHERWISE NOTED, ECCENTRIC REDUCERS SHALL BE INSTALLED FLAT SIDE ON TOP
13. UNLESS OTHERWISE NOTED, HOSE BIBS, HOSE RACKS, AND HOSE REELS SHALL BE MOUNTED 3.5 FT ABOVE FINISHED FLOOR.
14. ALL PIPING EXCEPT FOR THE FLANGES SHALL BE PAINTED IN ACCORDANCE WITH HIGH PERFORMANCE COATING, SPECIFICATION SECTION 09960. ALL VALVES SHALL BE INSTALLED WITH FACTORY FINISH.
15. THE SIZE OF PIPE CONNECTIONS AT THE PROCESS EQUIPMENT ARE SHOWN TO DEMONSTRATE INTENT, SIZES MAY VARY FROM WHAT IS SHOWN. COORDINATE THE SIZE OF CONNECTIONS TO ALL APPROVED PROCESS EQUIPMENT.

PIPING SYMBOLS

DOUBLE LINE	SINGLE LINE	DESCRIPTION
		WELDED JOINT
		FLANGED JOINT
		MECHANICAL JOINT
		FLANGED COUPLING ADAPTER
		FLEXIBLE COUPLING
		METAL BELLOWS EXP JOINT
		ELASTOMER BELLOWS EXP JOINT
		ELBOW UP
		ELBOW DOWN
		TEE UP
		TEE DOWN
		LATERAL UP
		LATERAL DOWN
		CONCENTRIC REDUCER
		ECCENTRIC REDUCER
		REDUCING BUSHING
		UNION
		CAP

VALVE SYMBOLS

DOUBLE LINE	SINGLE LINE	DESCRIPTION
		GATE
K	K	KNIFE GATE
		BUTTERFLY
		GLOBE
		BALL
V	V	VEE-BALL
SEAT END	SEAT END	ECCENTRIC PLUG
		PLUG OR COCK
		NEEDLE
		DIAPHRAGM
		PINCH
		SWING CHECK
		BALL CHECK
H	H	VALVE HYDRAULIC ACTUATOR
P	P	VALVE PNEUMATIC ACTUATOR
M	M	VALVE ELECTRIC MOTOR ACTUATOR
		PRESSURE RELIEF
		AIR AND/OR VACUUM RELEASE
	REGULATED SIDE	PRESSURE CONTROL OR REDUCING
		BACK PRESSURE
		CORPORATION COCK

REVISIONS		

CLIENT INFORMATION

SUSSEX COUNTY, DE
ENGINEERING
DEPARTMENT

INLAND BAYS RWF
PHASE #2 EXPANSION:
CONTRACT S19-10

KEY PLAN

GRAPHIC SCALES

SIGNATURE

ROBERT H. McLEAN
LICENSE
No. 21386
PROFESSIONAL ENGINEER
7/1/19

WRA
Whitman, Requardt & Associates, LLP
801 South Caroline Street, Baltimore, Maryland 21231

MECHANICAL NOTES, LEGEND ABBREVIATIONS, AND DETAILS

DRAWING NO.

M00.01

SCALE: NONE		
DATE: JULY 2019	SHEET 98 OF 217	
DES: LAQ	DRAWN: LAQ	CHECK: DCC

N:\14875-0283-CAD\Mechanical\M00_01.dwg

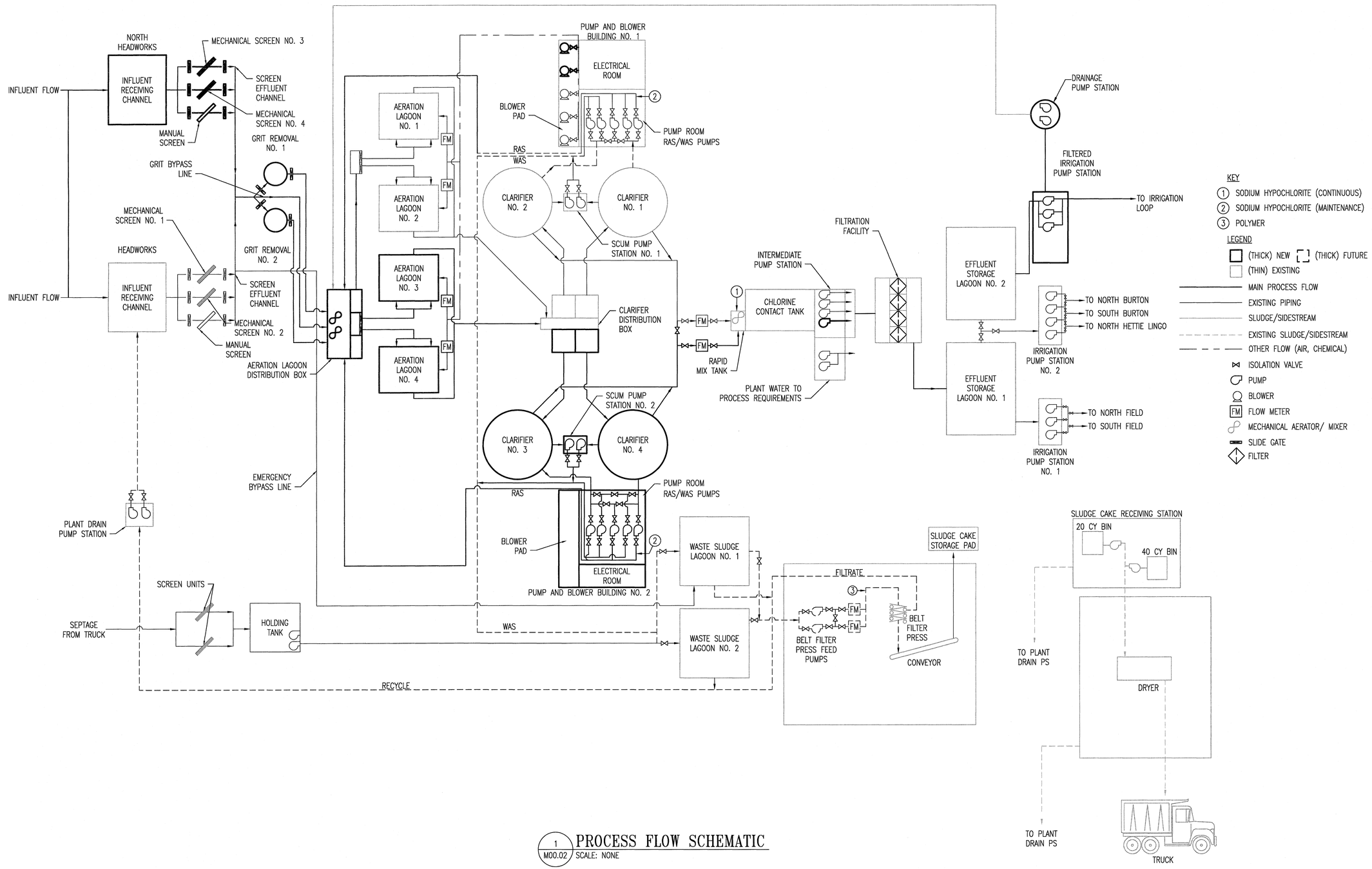

1 M00.02 PROCESS FLOW SCHEMATIC
SCALE: NONE

REVISIONS		

CLIENT INFORMATION

SUSSEX COUNTY, DE
ENGINEERING DEPARTMENT

INLAND BAYS RWF
PHASE #2 EXPANSION:
CONTRACT S19-10

KEY PLAN

GRAPHIC SCALES

SIGNATURE

ROBERT H. McLEAN LICENSE No. 21386 DELAWARE PROFESSIONAL ENGINEER
7/1/19

WRA
Whitman, Requardt & Associates, LLP
801 South Caroline Street, Baltimore, Maryland 21231

PROCESS FLOW SCHEMATIC

DRAWING NO.
M00.02

SCALE: NONE		
DATE: JULY 2019	SHEET 99 OF 217	
DES: RHM	DRAWN: LAQ	CHECK: DCC

N:\1428%-0283\CADD\1428280005-02.dwg

PLANT DESIGN FLOWS

	MAXIMUM MONTH, MGD	SUMMER AVERAGE DAILY FLOW (ADF), MGD	WINTER ADF, MGD	ANNUAL ADF, MGD	MAXIMUM DAY, MGD	PEAK HOUR, MGD
INFLUENT FLOW	4.0	3.6	2.8	3.0	7.6	13.0
INTERNAL RECYCLE	0.3	0.3	0.3	0.3	0.3	0.3
PROCESS DESIGN FLOW	4.3	3.9	3.1	3.3	7.9	13.3

INFLUENT CHARACTERISTICS WITH PLANT RECYCLE

	SUMMER AVERAGE		MAXIMUM MONTH	
	CONCENTRATION (MG/L)	LOADING (LBS/DAY)	MAX. MONTH (MG/L)	MAX. MONTH (LBS/DAY)
BOD_5	190	6180	247	8858
TSS	220	7156	286	10257
TKN	40	1301	52	1865
NH_4-N	25	813	33	1183
TP	7	228	9	323
ALKALINITY	251	8164	326	11691

NOTE: MAXIMUM MONTH LOADING DEVELOPED FOR MAXIMUM MONTH CONCENTRATION AT THE MAXIMUM MONTH FLOW RATE. MAXIMUM MONTH LOADING CONDITIONS CAN OCCUR AT ANY FLOW RATE.

DESIGN EFFLUENT CRITERIA

PARAMETER	PERMIT REQUIREMENTS	EFFLUENT GOALS
BOD_5, MG/L	50	≤15
TSS, MG/L	90	≤15
TN	250 LBS/ YEAR/ ACRE*	≤10 MG/L
FC, CFU/ 100 ML	200	<200
CHLORIDE, MG/L DAILY AVERAGE	210	<210
TOTAL RESIDUAL CHLORINE, MG/L	1.0–4.0 RANGE	1.0< TRC <4.0
pH	5.5–9.0 RANGE	5.5< pH <9.0

*250 LBS/ YEAR/ ACRE CORRESPONDS TO EFFLUENT CONCENTRATION OF <11 MG/L TN AT DESIGN FLOWS.

NORTH HEADWORKS

SCREEN TYPE	MECHANICAL BAR SCREEN
NO. OF MECHANICAL SCREENS	2
CAPACITY PER SCREEN, MGD	6.50
SCREEN OPENING SIZE, INCHES	1/4"
MOTOR SIZE PER SCREEN, HP	0.75
TYPE OF SCREENINGS CONVEYOR	SCREW CONVEYOR
NO. OF SCREENINGS CONVEYOR	1
SCREENINGS CONVEYOR CAPACITY, YD³/HOUR	132
MOTOR SIZE, HP	3

GRIT FACILITY

NO, OF GRIT TANKS	2
CAPACITY PER TANK, MGD	7
MOTOR SIZE PER GRIT TANK DRIVE , HP	1
MOTOR SIZE PER GRIT PUMP , HP	10
MOTOR SIZE PER GRIT WASHER	3.75
GRIT CAPTURE RATING, % GRIT>50 MESH	95
GRIT CAPTURE RATING, % GRIT >70 MESH, <50 MESH	85
GRIT CAPTURE RATING, % GRIT >100 MESH, <70 MESH	75
GRIT WASHER FLOW, FT^3/HR	35
GRIT SCREW DIAMETER, IN	11

AERATION LAGOONS

TYPE OF TREATMENT SYSTEM	PHASED AERATION
NO. OF TREATMENT BASINS	2
AVERAGE SIDEWATER DEPTH, FT.	12*
BASIN DEPTH, FT.	14.2
VOLUME PER BASIN, MG	1.76
TOTAL TREATMENT VOLUME, MG	3.52
DESIGN SRT, (SUMMER/WINTER), DAYS	39/46
DESIGN MLSS, (SUMMER/WINTER), MG/L	2,950/3,500
WASTEWATER TEMPERATURE (MIN/MAX), °C	12/24

*12 FT. SIDE WATER DEPTH CORRESPONDS TO MAX MONTH ADF

PROCESS AERATION

AERATION TYPE	FINE BUBBLE AERATION
NO. OF DIFFUSER CHAINS PER BASIN	8
NO. OF DIFFUSER PER BASIN	416
AOR PER BASIN, LBS. O_2/HOUR	
MAXIMUM MONTH	213
AVERAGE MONTH	165
NUMBER OF BLOWERS (4 DUTY + 1 SPARE)	(EXISTING/NEW) 3/2
LOCATION	PUMP AND BLOWER BUILDING NO. 1
BLOWER TYPE	POSITIVE DISPLACEMENT
MOTOR SIZE PER BLOWER, HP	125
CAPACITY PER BLOWER, SCFM	2,200
BLOWER DISCHARGE PRESSURE, PSIG	6.6

CLARIFIERS

NO. OF UNITS (EXISTING/NEW)	2/2
DIAMETER, FT.	85
SIDEWATER DEPTH, FT.	14
HEIGHT, FT.	16
AVERAGE SURFACE OVERFLOW RATE, GPD/FT²*	190
PEAK SURFACE OVERFLOW RATE, GPD/FT²**	800
AVERAGE SOLIDS LOADING RATE, LBS/DAY/FT²*	12.2
PEAK SOLIDS LOADING RATE, LBS/DAY/FT²**	26.1

*AVERAGE SOLIDS LOADING RATE BASED ON MLSS OF 3,500 MG/L AT 125% OF SUMMER ADF AT AVERAGE FLOW.

**PEAK SOLIDS LOADING RATE BASED ON MLSS OF 3,500 MG/L AT 50% OF SUMMER ADF AT PEAK PLOW.

EFFLUENT STORAGE LAGOONS

	EXISTING
NO. OF STORAGE LAGOONS	2
SIDEWATER DEPTH BY GRAVITY	8.25
SIDEWATER DEPTH WITH PUMPING	13
STORAGE VOLUME BY GRAVITY	43
STORAGE VOLUME WITH PUMPING	71
STORAGE TIME AT WINTER DESIGN FLOWS*	23

*VOLUME TO DETERMINE AVAILABLE STORAGE TIME IS TAKEN AS THE AVAILABLE VOLUME WHEN FLOW IS PUMPED TO THE LAGOONS.

CHLORINE CONTACT BASIN

NO. OF BASINS	1
VOLUME PER BASIN, GALLONS	150000
SIDEWATER DEPTH, FT.	10
HRT AT PEAK DESIGN FLOW, MINUTES	16

SODIUM HYPOCHLORITE FACILITY

NO. OF CHEMICAL FEED PUMPS	5 (4 DUTY + 1 STANDBY)
PUMP TYPE	PERISTALTIC
PUMP CAPACITY, GPH	18
NO. OF BULK STORAGE TANKS	1
VOLUME PER TANK, GALLONS	7000
STORAGE TIME, DAYS	32

PUMPS

RETURN & WASTE ACTIVATED SLUDGE PUMPING

LOCATION	PUMP AND BLOWER BUILDING NO.2
NO. OF RETURN SLUDGE PUMPS	3 (2 DUTY + 1 STAND–BY)
PUMP TYPE	SELF PRIMING CENTRIFUGAL
CAPACITY, GPM	1,300
TOTAL DYNAMIC HEAD, FT.	16
MOTOR SIZE PER PUMP, HP	15
NO. OF WASTE SLUDGE PUMPS	2 (1 DUTY + 1 STAND–BY)
PUMP TYPE	SELF PRIMING CENTRIFUGAL
CAPACITY, GPM	250
TOTAL DYNAMIC HEAD, FT.	20
MOTOR SIZE PER PUMP, HP	7.5

SCUM PUMPING STATION

LOCATION	SECONDARY CLARIFIERS NO. 3 + 4
NO. OF SCUM PUMPS	2 (1 DUTY + 1 STAND–BY)
PUMP TYPE	SUBMERSIBLE
CAPACITY, GPM	150
TOTAL DYNAMIC HEAD, FT.	25
MOTOR SIZE PER PUMP, HP	3

GRIT PUMPS

LOCATION	GRIT FACILITY
NO. OF GRIT PUMPS	2
PUMP TYPE	SELF PRIMING GRIT PUMP
CAPACITY, GPM	250
TOTAL DYNAMIC HEAD, FT.	15
MOTOR SIZE PER PUMP, HP	10

FILTERED IRRIGATION PUMPING STATION

SERVICE	IRRIGATION PUMPS
NO. OF PUMPS	3 (2 DUTY + 1 STAND–BY)
PUMP TYPE	HORIZONTAL SPLIT CASE
CAPACITY PER PUMP, GPM	2800
TOTAL DYNAMIC HEAD, FT.	165
MOTOR SIZE PER PUMP, HP	150

SERVICE	DRAINAGE PUMPS
NO. OF PUMPS	2 (1 DUTY + 1 STAND–BY)
PUMP TYPE	SUBMERSIBLE CENTRIFUGAL
CAPACITY PER PUMP, GPM	115
TOTAL DYNAMIC HEAD, FT.	32
MOTOR SIZE PER PUMP, HP	2

FILTERS

LOCATION	FILTRATION FACILITY
NO. OF FILTERS	4 (3 DUTY + 1 STANDBY)
AVG SYSTEM FLOW CAPACITY, MGD	4
MAX FLOW CAPACITY PER FILTER, MGD	4.67
FILTER DRIVE MOTOR, HP	¾
FILTRATION DEGREE, MICRONS	10
EFFLUENT TOTAL SUSPENDED SOLIDS, MG/L	<10
EFFLUENT TURBIDITY, NTU	2
MIN. BACKWASH PUMP FLOWRATE, GPM	130
MIN. BACKWASH PUMP PRESSURE, TDH	44
MOTOR SIZE BACKWASH PUMP, HP	3

REVISIONS

CLIENT INFORMATION

SUSSEX COUNTY, DE
ENGINEERING
DEPARTMENT

INLAND BAYS RWF
PHASE #2 EXPANSION:
CONTRACT S19-10

KEY PLAN

GRAPHIC SCALES

SIGNATURE

ROBERT H MacLEAN
LICENSE
No. 21386
DELAWARE
PROFESSIONAL ENGINEER
7/11/19

WRA
Whitman, Requardt & Associates, LLP
801 South Caroline Street, Baltimore, Maryland 21231

DESIGN CRITERIA

DRAWING NO.

M00.03

SCALE: NONE		
DATE: JULY 2019		SHEET 100 OF 229
DES: LAQ	DRAWN: LAQ	CHECK: DCC

N:\14256-02A\CADD\14256028M00-03.dwg

CONDITION	NORTH HEADWORKS FACILITY WATER LEVEL ELEVATIONS			GRIT FACILITY WATER LEVEL ELEVATIONS			AERATION LAGOON DISTRIBUTION STRUCTURE WATER LEVEL ELEVATIONS		AERATION LAGOON INFLUENT VAULT WATER LEVEL ELEVATIONS	AERATION LAGOONS WATER LEVEL ELEVATIONS	AERATION LAGOON EFFLUENT STRUCTURE WATER LEVEL ELEVATIONS	SECONDARY CLARIFIER DISTRIBUTION BOX WATER LEVEL ELEVATIONS		FOR INFORMATIONAL PURPOSES ONLY
PEAK HOURLY FLOW OF 13.60 MGD WITH ALL UNITS IN SERVICE	45.69	44.94	44.65	44.14	43.64	43.49	42.15	41.65	40.25	40.11	38.19	37.50	36.79	
MAX MONTHLY FLOW OF 4.00 MGD WITH ALL UNITS IN SERVICE	43.88	43.38	42.66	42.61	42.11	42.00	41.85	40.21	39.96	39.95	37.31	37.23	36.53	

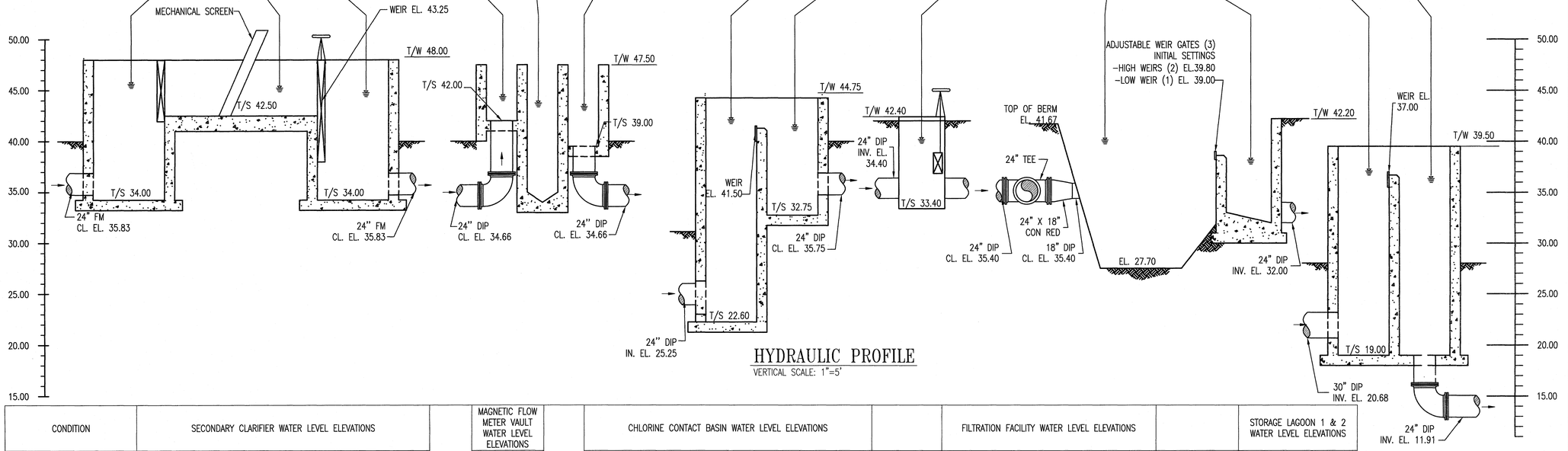

HYDRAULIC PROFILE
VERTICAL SCALE: 1"=5'

CONDITION	SECONDARY CLARIFIER WATER LEVEL ELEVATIONS					MAGNETIC FLOW METER VAULT WATER LEVEL ELEVATIONS	CHLORINE CONTACT BASIN WATER LEVEL ELEVATIONS				FILTRATION FACILITY WATER LEVEL ELEVATIONS			STORAGE LAGOON 1 & 2 WATER LEVEL ELEVATIONS
PEAK HOURLY FLOW WITH INTERMEDIATE PUMPS IN SERVICE	N/A	N/A	N/A	N/A	N/A	N/A	N/A	N/A	N/A	(PUMPED) 37.08	(PUMPED) 36.67	(PUMPED) 36.66	(PUMPED) 35.16	35.00
PEAK HOURLY FLOW OF 13.60 MGD WITH ALL UNITS IN SERVICE	34.60	36.41	36.58	34.82	33.56	N/A	32.43	32.30	31.66	(GRAVITY) 31.33	(GRAVITY) 30.92	(GRAVITY) 30.66	(GRAVITY) 29.16	29.00
MAX MONTHLY FLOW OF 4.00 MGD WITH ALL UNITS IN SERVICE	34.28	36.34	36.51	34.38	32.09	N/A	31.97	31.95	31.23	30.79	30.76	30.52	29.04	29.00

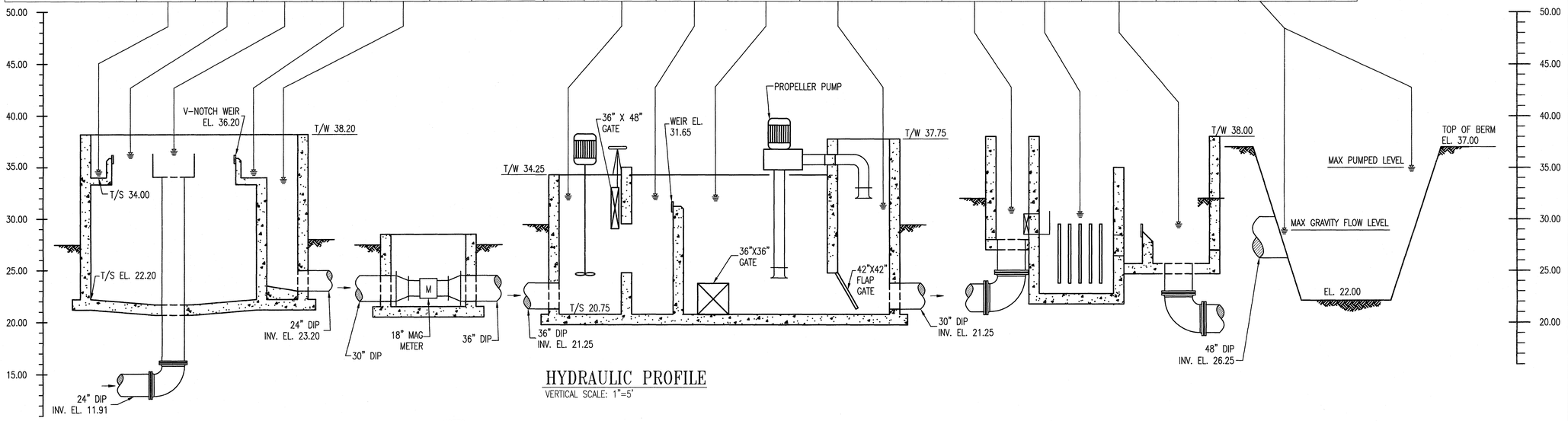

HYDRAULIC PROFILE
VERTICAL SCALE: 1"=5'

NOTES
1. WATER MARK ELEVATIONS ARE BASED ON PEAK HOURLY FLOW CONDITIONS.
2. WATER SURFACE ELEVATIONS AT PEAK HOURLY FLOW CONDITIONS ARE BASED ON A PEAK FLOW RATE OF 13.00 MGD (WHICH INCLUDES PLANT RECYCLES) AND A RETURN SLUDGE RATE OF 2.00 MGD.
3. WATER SURFACE ELEVATION AT MAXIMUM MONTH FLOW CONDITIONS ARE BASED ON A MAXIMUM MONTH FLOW RATE OF 4.30 MGD (WHICH INCLUDES PLANT RECYCLES) AND A RETURN SLUDGE RATE OF 2.00 MGD.
4. THREE ADJUSTABLE WEIR GATES TO BE INSTALLED ON BOTH AERATION LAGOON EFFLUENT STRUCTURES. THE HIGH AND LOW WEIR ELEVATIONS SHOWN ARE INTENDED FOR NORMAL OPERATING CONDITIONS AND CAN BE ADJUSTED BETWEEN 39.00 AND 39.80 AS NEEDED.
5. GRAVITY FLOW FROM THE CHLORINE CONTACT BASIN TO THE EFFLUENT STORAGE LAGOON CAN BE ACHIEVED UP TO A WATER SURFACE ELEVATION OF 31.00 IN THE STORAGE LAGOON. FOUR PROPELLER PUMPS (3 DUTY + 1 STAND-BY) WILL BE REQUIRED TO RAISE THE HGL TO PERMIT FLOW TO BE CONVEYED TO THE STORAGE LAGOON WHEN THE WATER SURFACE ELEVATION IN THE STORAGE LAGOON EXCEEDS 31.00.

N:\14256-026\CADD\14256028M00-04.dwg

REVISIONS

CLIENT INFORMATION

SUSSEX COUNTY, DE
ENGINEERING
DEPARTMENT

INLAND BAYS RWF
PHASE #2 EXPANSION:
CONTRACT S19-10

KEY PLAN

GRAPHIC SCALES

SIGNATURE

ROBERT H McLIN
LICENSE
No. 21386
DELAWARE
PROFESSIONAL ENGINEER
7/11/19

WRA
Whitman, Requardt & Associates, LLP
801 South Caroline Street, Baltimore, Maryland 21231

HYDRAULIC PROFILE

DRAWING NO.

M00.04

SCALE: NONE		
DATE: JULY 2019		SHEET 101 OF 217
DES: LAQ	DRAWN: LAQ	CHECK: DCC

FAN SCHEDULE

UNIT I.D.	TYPE	DRIVE	TOTAL CAPACITY CFM	TOTAL S.P. IN W.C.	MAX. FAN RPM	ELECTRICAL CHARACTERISTICS VOLTS/PH/HZ	MAX MOTOR HP	DAMPER	(LOCATION, CLASSIFICATION, ETC.)
PBB2-EF-101	P	BELT	1,218	0.115	1149	120/1/60	1/2	BDD	PUMP AND BLOWER BUILDING NO. 2 ELECTRICAL ROOM
PBB2-EF-102	P	BELT	2,214	0.495	1149	120/1/60	1/2	BDD	PUMP AND BLOWER BUILDING NO. 2 PUMP ROOM
FIPS-EF-101	P	BELT	3,380	0.309	1149	120/1/60	1/2	BDD	FILTERED IRRIGATION PUMP STATION ELECTRICAL ROOM
FIPS-EF-102	P	BELT	7,370	0.483	1433	460/3/60	1	BDD	FILTERED IRRIGATION PUMP STATION PUMP ROOM
FIPS-EF-103	P	BELT	7,370	0.483	1433	460/3/60	1	BDD	FILTERED IRRIGATION PUMP STATION PUMP ROOM
FF-SF-101	P	BELT	620	0.700	1700	120/1/60	1	N/A	FILTRATION FACILITY
FF-SF-102	P	BELT	620	0.700	1700	120/1/60	1	N/A	FILTRATION FACILITY

ELECTRIC UNIT HEATER SCHEDULE

UNIT I.D.	KW	AMPS	ELECTRICAL CHARRIPS-ACTERISTICS VOLTS/PH/HZ	THERMOSTAT INTEGRAL(I) OR REMOTE WALL(R)	REMARKS (LOCATION, TYPE, ETC.)
PBB2-EUH-101	7.5	9.9	480/3/60	I	PUMP AND BLOWER BUILDING NO. 2 PUMP ROOM CORROSION RESISTANT
PBB2-EUH-102	7.5	9.9	480/3/60	I	PUMP AND BLOWER BUILDING NO. 2 PUMP ROOM CORROSION RESISTANT
PBB2-EUH-103	5	6.3	480/3/60	I	PUMP AND BLOWER BUILDING NO. 2 ELECTRICAL ROOM
PBB2-EUH-104	5	6.3	480/3/60	I	PUMP AND BLOWER BUILDING NO. 2 ELECTRICAL ROOM
FIPS-EUH-101	7.5	9.9	480/3/60	I	FILTERED IRRIGATION PUMP STATION ELECTRICAL ROOM
FIPS-EUH-102	7.5	9.9	480/3/60	I	FILTERED IRRIGATION PUMP STATION ELECTRICAL ROOM
FIPS-EUH-103	5	6.3	480/3/60	I	FILTERED IRRIGATION PUMP STATION EQUIPMENT ROOM CORROSION RESISTANT
FIPS-EUH-104	5	6.3	480/3/60	I	FILTERED IRRIGATION PUMP STATION EQUIPMENT ROOM CORROSION RESISTANT
FIPS-EUH-105	5	6.3	480/3/60	I	FILTERED IRRIGATION PUMP STATION EQUIPMENT ROOM CORROSION RESISTANT
FIPS-EUH-106	5	6.3	480/3/60	I	FILTERED IRRIGATION PUMP STATION EQUIPMENT ROOM CORROSION RESISTANT
FIPS-EUH-107	5	6.3	480/3/60	I	FILTERED IRRIGATION PUMP STATION EQUIPMENT ROOM CORROSION RESISTANT
FIPS-EUH-108	5	6.3	480/3/60	I	FILTERED IRRIGATION PUMP STATION EQUIPMENT ROOM CORROSION RESISTANT
FIPS-EUH-109	5	6.3	480/3/60	I	FILTERED IRRIGATION PUMP STATION EQUIPMENT ROOM CORROSION RESISTANT
FIPS-EUH-110	5	6.3	480/3/60	I	FILTERED IRRIGATION PUMP STATION EQUIPMENT ROOM CORROSION RESISTANT
FIPS-EUH-111	5	6.3	480/3/60	I	FILTERED IRRIGATION PUMP STATION EQUIPMENT ROOM CORROSION RESISTANT
FIPS-EUH-112	5	6.3	480/3/60	I	FILTERED IRRIGATION PUMP STATION EQUIPMENT ROOM CORROSION RESISTANT
FF-EUH-101	10	12.9	480/3/60	I	FILTRATION FACILITY
FF-EUH-102	10	12.9	480/3/60	I	FILTRATION FACILITY

DUCTLESS SPLIT AIR CONDITIONING SYSTEM SCHEDULE

	INDOOR UNIT				OUTSIDE UNIT								
AREA SERVED	UNIT I.D.	COOLING TOTAL BTUH	ELECTRICAL CHARACTERISTICS VOLTS/PH/HZ	TYPE	UNIT I.D.	MIN SEER	REFRIG	COOLING CAP. BTUH	HEATING CAP. BTUH	ELECTRICAL CHARACTERISTICS VOLTS/PH/HZ	COOLING AMBIENT TEMP DEG F	HEATING AMBIENT TEMP DEG F	REMARKS
PUMP AND BLOWER NO.2 ELECTRICAL ROOM	PBB2-CU-101	30,000	230/1/60	WALL MOUNTED	PBB2-AC-101	—	R410A	30,000	–	230/1/60	95	11	
PUMP AND BLOWER NO.2 ELECTRICAL ROOM	PBB2-CU-102	30,000	230/1/60	WALL MOUNTED	PBB2-AC-102	—	R410A	30,000	–	230/1/60	95	11	
FILTERED IRRIGATION PUMP STATION ELECTRICAL ROOM	FIPS-CU-101	30,000	230/1/60	WALL MOUNTED	FIPS-AC-101	—	R410A	30,000	–	230/1/60	95	11	
FILTERED IRRIGATION PUMP STATION ELECTRICAL ROOM	FIPS-CU-102	30,000	230/1/60	WALL MOUNTED	FIPS-AC-102	—	R410A	30,000	–	230/1/60	95	11	
FILTERED IRRIGATION PUMP STATION ELECTRICAL ROOM	FIPS-CU-103	30,000	230/1/60	WALL MOUNTED	FIPS-AC-103	—	R410A	30,000	–	230/1/60	95	11	

(1) CONTRACTOR COORDINATE INDOOR UNIT INTERNAL STATIC PRESSURE FORMULATION AND REQUIRED HORSEPOWER.
(2) CONDITIONS: 75'F DB WITH 40% RH. COORDINATE COIL REQUIREMENTS WITH AIR HANDLER COMPONENTS.

SLIDE GATE SCHEDULE

GATE LOCATION/ID	OPENING		SELF CONTAINED Y/N	DESIGN HEAD (FT)		BOTTOM TYPE FLUSH OR STD.	WALL THIMBLE TYPE	OPERATOR		REMARKS
	HEIGHT (IN)	WIDTH (IN)		SEATING	UNSEATING			TYPE	POWER/MOTIVE FLUID REQUIREMENTS	
GF-SG-101	24	30	Y	2	2	FLUSH	WALL MOUNTED	MANUAL	–	HAND CRANK 3' ABOVE TOP OF SLAB
GF-SG-102	24	30	Y	2	2	FLUSH	WALL MOUNTED	MANUAL	–	HAND CRANK 3' ABOVE TOP OF SLAB
GF-SG-103	48	30	Y	2	4	STANDARD	WALL MOUNTED	MANUAL	–	HAND CRANK 3' ABOVE TOP OF SLAB
GF-SG-104	48	30	Y	2	4	STANDARD	WALL MOUNTED	MANUAL	–	HAND CRANK 3' ABOVE TOP OF SLAB
ADB-SG-101	24	24	Y	5.5	4	FLUSH	FLG X MJ	MANUAL	–	HAND CRANK 3' ABOVE TOP OF SLAB
ADB-SG-102	24	24	Y	5.5	4	FLUSH	FLG X MJ	MANUAL	–	HAND CRANK 3' ABOVE TOP OF SLAB
FF-SG-101	24	24	N	8	8	STANDARD	WALL MOUNTED	MANUAL	–	HAND CRANK 3' ABOVE TOP OF SLAB
FF-SG-102	24	24	N	8	8	STANDARD	WALL MOUNTED	MANUAL	–	HAND CRANK 3' ABOVE TOP OF SLAB
FF-SG-103	24	24	N	8	8	STANDARD	WALL MOUNTED	MANUAL	–	HAND CRANK 3' ABOVE TOP OF SLAB
FF-SG-104	24	24	N	8	8	STANDARD	WALL MOUNTED	MANUAL	–	HAND CRANK 3' ABOVE TOP OF SLAB

WEIR GATE SCHEDULE

GATE LOCATION/ID	OPENING		SELF CONTAINED Y/N	DESIGN HEAD (FT)		WALL THIMBLE TYPE	OPERATOR		REMARKS
	HEIGHT (IN)	WIDTH (IN)		SEATING	UNSEATING		TYPE	POWER/MOTIVE FLUID REQUIREMENTS	
NHW-WG-101	66	30	Y	7.5	7.5	WALL MOUNTED	MANUAL	–	HAND CRANK 3' ABOVE TOP OF SLAB
NHW-WG-102	66	30	Y	7.5	7.5	WALL MOUNTED	MANUAL	–	HAND CRANK 3' ABOVE TOP OF SLAB
GF-WG-201	24	72	Y	5.5	5.5	WALL MOUNTED	MANUAL	–	HAND CRANK 3' ABOVE TOP OF SLAB
AL-WG-401	27	36	Y	4.5	4.5	WALL MOUNTED	MANUAL	–	HAND CRANK 3' ABOVE TOP OF SLAB
AL-WG-402	27	36	Y	4.5	4.5	WALL MOUNTED	MANUAL	–	HAND CRANK 3' ABOVE TOP OF SLAB
AL-WG-403	27	36	Y	4.5	4.5	WALL MOUNTED	MANUAL	–	HAND CRANK 3' ABOVE TOP OF SLAB
AL-WG-404	27	36	Y	4.5	4.5	WALL MOUNTED	MANUAL	–	HAND CRANK 3' ABOVE TOP OF SLAB
AL-WG-405	27	36	Y	4.5	4.5	WALL MOUNTED	MANUAL	–	HAND CRANK 3' ABOVE TOP OF SLAB
AL-WG-406	27	36	Y	4.5	4.5	WALL MOUNTED	MANUAL	–	HAND CRANK 3' ABOVE TOP OF SLAB
CDS-WG-510	24	72	Y	4	4	WALL MOUNTED	MANUAL	–	HAND CRANK 3' ABOVE TOP OF SLAB
CDS-WG-511	24	72	Y	4	4	WALL MOUNTED	MANUAL	–	HAND CRANK 3' ABOVE TOP OF SLAB

STOP LOG SCHEDULE

LOG LOCATION/ID	CHANNEL OPENING		MOUNTING TYPE	REMARKS
	HEIGHT (IN)	WIDTH (IN)		
NHW-SL-101	66	30	SURFACE MOUNTED	SEALED BOTTOM
NHW-SL-102	66	30	SURFACE MOUNTED	SEALED BOTTOM
NHW-SL-103	66	30	SURFACE MOUNTED	SEALED BOTTOM
ADB-SL-101	54	36	EMBEDDED IN CHANNEL	SEALED BOTTOM
ADB-SL-102	54	36	EMBEDDED IN CHANNEL	SEALED BOTTOM
ADB-SL-103	54	36	EMBEDDED IN CHANNEL	SEALED BOTTOM
ADB-SL-104	54	36	EMBEDDED IN CHANNEL	SEALED BOTTOM
ADB-SL-105	54	36	EMBEDDED IN CHANNEL	SEALED BOTTOM
ADB-SL-106	54	36	EMBEDDED IN CHANNEL	SEALED BOTTOM

ELECTRIC WATER HEATER SCHEDULE

UNIT I.D.	TYPE	TEMP. RISE	VOLTS/ PHASE	KW	AMPS	REMARKS (LOCATION, CLASSIFICATION, ETC.)
FIPS-IWH-101	INST.	57 DEG F@ 1GPM	208/1	8.3	40	FILTERED IRRIGATION PUMP STATION, WALL MOUNTED

PLUMBING FIXTURE SCHEDULE

FIXTURE	DESCRIPTION	CW	HW	VENT	SAN	REMARKS
P-1	SERVICE SINK	$\frac{1}{2}$"	--	--	--	--
P-2	EYE WASH	$\frac{1}{2}$"	--	--	--	--
P-3	WATER HEATER	$\frac{3}{8}$"	$\frac{3}{8}$"	--	--	PUMP ROOM
P-4	HOSE BIB	$\frac{3}{4}$"	--	--	--	PUMP ROOM
FD-1	FLOOR DRAIN	--	--	1"	4"	--
FD-2	FLOOR DRAIN	--	--	4"	4"	WITH FUNNEL

REVISIONS		

CLIENT INFORMATION

SUSSEX COUNTY, DE ENGINEERING DEPARTMENT

INLAND BAYS RWF PHASE #2 EXPANSION: CONTRACT S19-10

KEY PLAN

GRAPHIC SCALES

SIGNATURE

ROBERT H MCLEAN LICENSE No. 21386 STATE OF DELAWARE PROFESSIONAL ENGINEER 7/11/19

Whitman, Requardt & Associates, LLP
801 South Caroline Street, Baltimore, Maryland 21231

SCHEDULES

DRAWING NO.

M00.05

SCALE: NO SCALE		
DATE: JULY 2019	SHEET 102 OF 217	
DES: MH	DRAWN: MH	CHECK: RHM

M:\LAND\Projects\12857\CAD\M\12857M00-05.dwg, 7/11/2019 2:40:50 PM, mhall

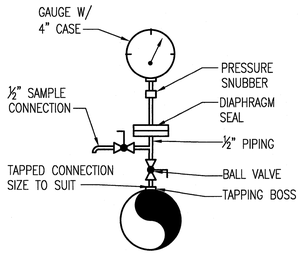

NOTES:
1. SERVICE SADDLE MAY BE USED IN LIEU OF TAPPING BOSS.
2. SEE PLANS AND SCHEMATICS FOR QUANTITIES AND RANGES.

HORIZONTAL PIPE PRESURE GAUGE DETAIL

A M00.06 SCALE: NONE

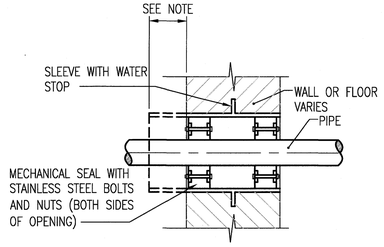

NOTE: FOR FLOOR INSTALLATION EXTEND WALKWAY SIDE OF SLEEVE 4 INCHES ABOVE FINISHED FLOOR

PIPE SLEEVE DETAIL

B M00.06 SCALE: NONE

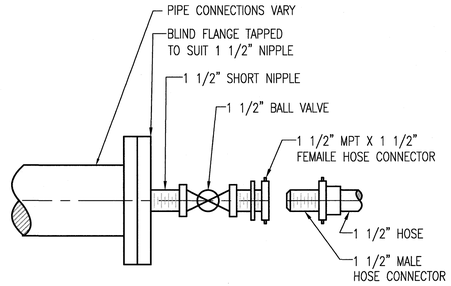

FLUSHING CONNECTION

C M00.06 SCALE: NONE

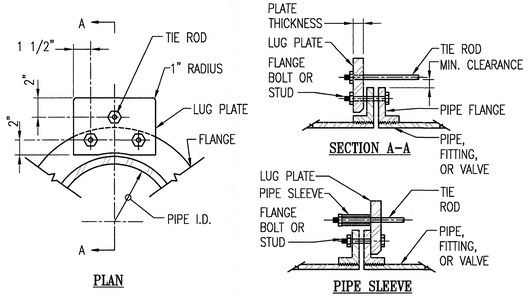

PLAN

NOTES:
1. ONE FLANGE CONNECTION IS SHOWN FOR CLARITY. DETAIL IS TYPICAL FOR BOTH FLANGES.
2. IF PLATE IS REQUIRED TO BE MOUNTED ON REVERSE SIDE OF FLANGE, PROVIDE A PIPE SLEEVE AND WASHER ON THE END OF THE TIE ROD SO THAT THE MAXIMUM CLEARANCE BETWEEN THE SLEEVE AND THE FLANGE CAN BE MAINTAINED.
3. FLANGE SURFACE IN CONTACT WITH LUG PLATE SHALL BE GROUND SMOOTH TO CLEAR THE CASTING IRREGULARITY AND EMBOSSED LETTERING. CONTACT SURFACE OF LUG PLATE SHALL BE MACHINED TO A ONE DEGREE TAPER FOR PIPE DIAMETERS 12-INCH AND LARGER.
4. MATERIALS SHALL BE AS FOLLOWS:
   ROD MATERIAL – ASTM A193, GRADE B7
   PLATE MATERIAL – ASTM A36
   SLEEVE MATERIAL – SCHEDULE 40 STEEL PIPE

PIPE SIZE	NUMBER OF RODS	DIAMETER OF RODS	LUG PLATE THICKNESS	PIPE SLEEVE (IF REQUIRED)	DESIGN PRESSURE PSI
4"	2	¾"	1"	1"	150
6"	2	¾"	1"	1"	150
8"	2	¾"	1"	1"	150
10"	2	¾"	1"	1"	150
12"	4	¾"	1"	1"	150
14"	4	¾"	1"	1"	150
16"	4	⅞"	1"	1"	150
18"	4	⅞"	1⅛"	1"	150
20"	4	⅞"	1¼"	1"	150
24"	4	1⅛"	1½"	1¼"	150
30"	4	1¼"	2"	1⅜"	150
36"	4	1¼"	2½"	1½"	150
42"	8	1⅛"	2"	1½"	150

TIE ROD DETAIL

G M00.06 SCALE: NONE

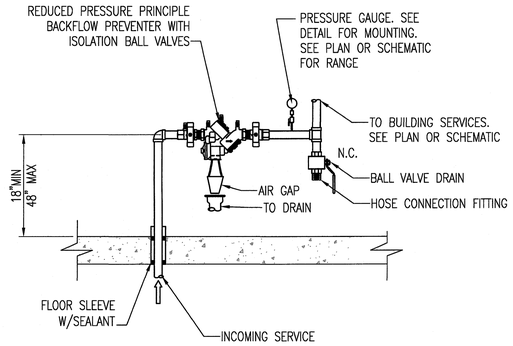

2 INCH AND SMALLER SMALL BACKFLOW PREVENTER DETAIL

D M00.06 SCALE: NONE

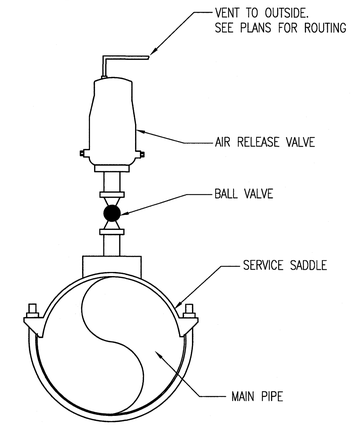

SEWAGE AIR RELEASE VALVE DETAIL

E M00.06 SCALE: NONE

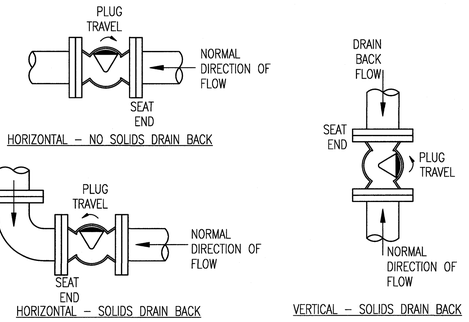

NOTES:
1. VALVES SHOWN IN FULL OPEN POSITION.
2. DIAGRAMS ARE SECTION VIEW.

PLUG VALVE SEAT DETAIL

F M00.06 SCALE: NONE

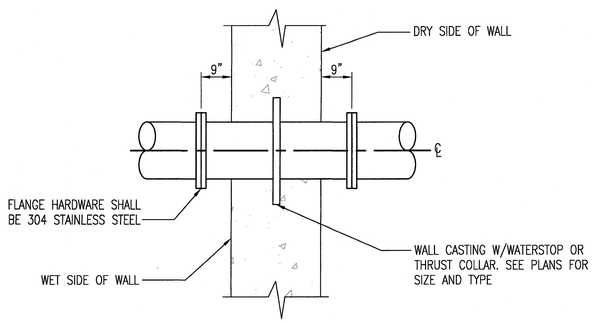

NOTES:
1. WATERSTOPS SHALL BE CENTERED IN WALL.

FLG X FLG WALL CASTING

H M00.06 SCALE: NONE

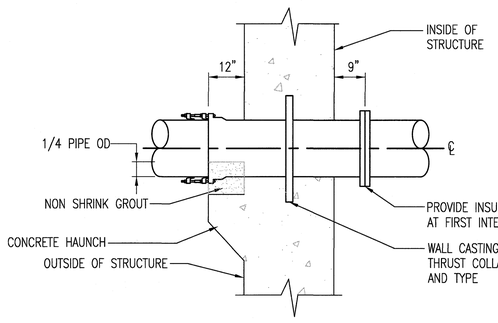

NOTES:
1. SEE CIVIL DRAWINGS FOR EXTERIOR JOINT TYPES.
2. WATERSTOPS SHALL BE CENTERED IN WALL

MJ X FLG WALL CASTING

I M00.06 SCALE: NONE

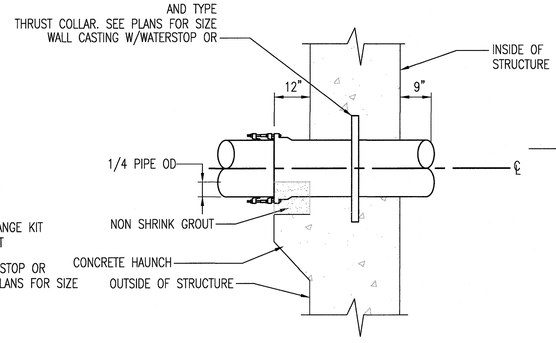

NOTES:
1. SEE CIVIL DRAWINGS FOR EXTERIOR JOINT TYPES.
2. WATERSTOPS SHALL BE CENTERED IN WALL

MJ X PE WALL CASTING

J M00.06 SCALE: NONE

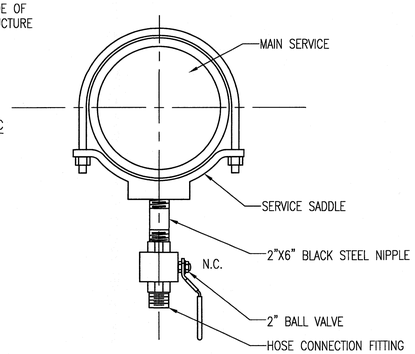

LINE DRAIN DETAIL

K M00.06 SCALE: NONE

REVISIONS

CLIENT INFORMATION

SUSSEX COUNTY, DE
ENGINEERING
DEPARTMENT

INLAND BAYS RWF
PHASE #2 EXPANSION:
CONTRACT S19-10

KEY PLAN

GRAPHIC SCALES

SIGNATURE

ROBERT H McGEE LICENSE No. 21386 PROFESSIONAL ENGINEER STATE OF DELAWARE
12/10/18

Whitman, Requardt & Associates, LLP
801 South Caroline Street, Baltimore, Maryland 21231

DETAILS

DRAWING NO.
M00.06

SCALE: NO SCALE		
DATE: DEC. 2018		SHEET 103 OF 217
DES: MH	DRAWN: MH	CHECK: RHM

F:\Projects\Wilmington\Documents\Submittals\Working\M00.06 Details.dgn 19101\1425602800-06.dwg

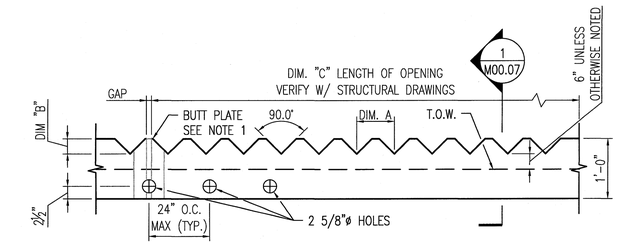

WEIR DETAIL 'A'

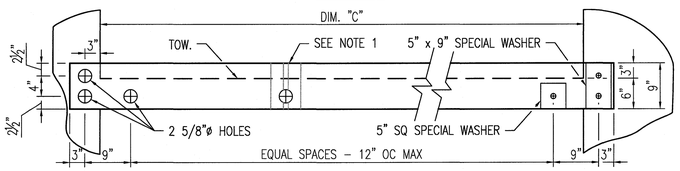

WEIR DETAIL 'B'

A M00.07 WEIR TYPES AND DETAILS
SCALE: NONE

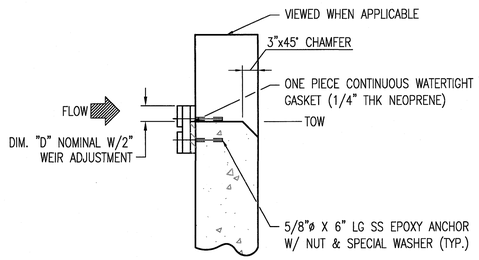

1 M00.07 WEIR SECTION 1
SCALE: NONE

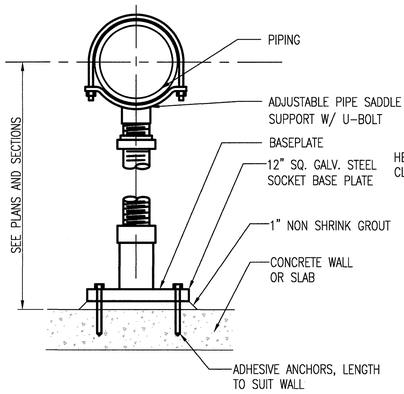

B M00.07 TYPICAL SADDLE SUPPORT DETAIL
SCALE: NONE

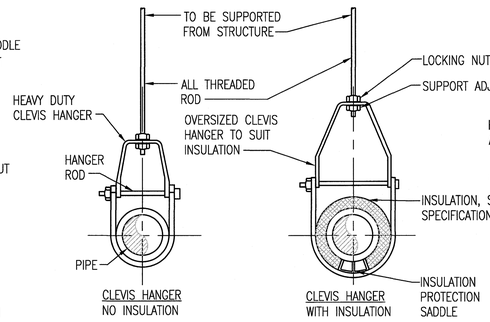

C M00.07 TYPICAL CLEVIS HANGER PIPE SUPPORT DETAIL
SCALE: NONE

GENERAL NOTES:

1. SEE DRAWING M00.01 FOR NOTES, SYMBOLS AND ABBREVIATIONS.

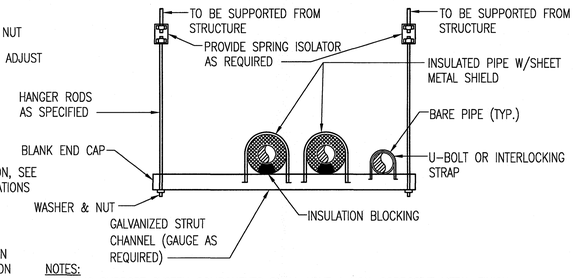

NOTES:
1. PIPING SUPPORT SYSTEM COMPONENTS SHALL HAVE A NON-CORROSIVE METAL FINISH.
2. COPPER PIPING SHALL BE PROTECTED FROM CONTACT WITH DISSIMILAR METALS.
3. ARRANGEMENT SHOWN IS FOR PIPING SMALLER THAN 4 INCH.
4. PROVIDE PIPE SADDLES/SHIELDS TO PREVENT POINT LOADING TO PIPE.

D M00.07 TRAPEZE PIPE SUPPORT DETAIL
SCALE: NONE

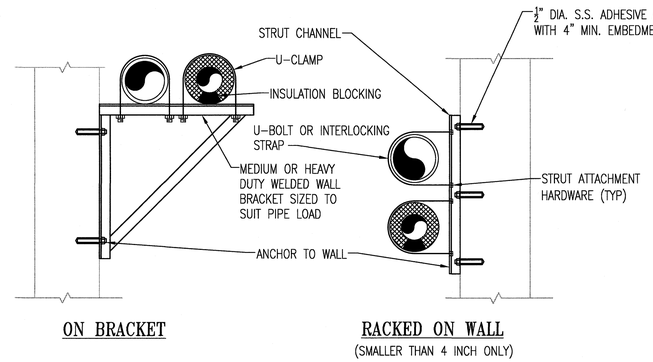

ON BRACKET

RACKED ON WALL
(SMALLER THAN 4 INCH ONLY)

NOTES:
1. PIPING SUPPORT SYSTEM COMPONENTS SHALL HAVE A NON-CORROSIVE METAL FINISH.
2. COPPER PIPING SHALL BE PROTECTED FROM CONTACT WITH DISSIMILAR METALS.
3. PROVIDE PIPE SADDLES/SHIELDS TO PREVENT POINT LOADING TO PIPE.

E M00.07 WALL MOUNT PIPE SUPPORT DETAIL
SCALE: NONE

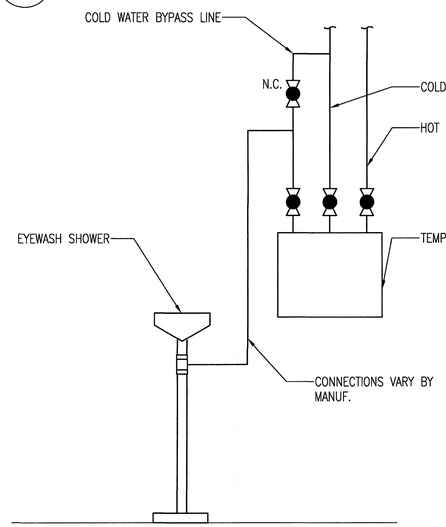

NOTES:
1. VALVES SHALL BE LOCATED WITHIN 6 FEET OF FINISHED FLOOR.

F M00.07 EYEWASH DETAIL
SCALE: NONE

WEIR SCHEDULE								
WEIR NO.	DESCRIPTION	MATERIAL	REFER TO DETAIL	DIM. "A"	DIM. "B"	DIM. "C"	ELEVATION	TOW. EL.
ADB-W-101, ADB-W-102, ADB-W-103, ADB-W-104, ADB-W-105, ADB-W-106	AERATION DISTRIBUTION BOX	304 S.S.	B	-----	-----	3'-0"	41.50	44.25
AL-W-401, AL-W-404	AERATION EFFLUENT STRUCTURE	304 S.S.	A	0'-6"	0'-3"	3'-0"	39.00	42.16
AL-W-402, AL-W-403, AL-W-405, AL-W-406	AERATION EFFLUENT STRUCTURE	304 S.S.	A	0'-6"	0'-3"	3'-0"	39.80	42.16
SC-W-403, SC-W-404	CLARIFIERS	FRP	A	0'-6"	0'-3"	267'-0"	36.20	35.95

WEIR NOTES:

1. LOCATE BUTT JOINT TO SCALE AND PLATES AS REQUIRED TO ALLOW FOR HORIZONTAL EXPANSION. BUTT PLATE SHALL BE NOTCHED TO MATCH WEIR SECTIONS AS SHOWN.
2. OVERALL LENGTH OF OPENING (DIM. "C") IS NOMINAL AND MUST BE VERIFIED WITH STRUCTURAL DRAWINGS FOR NEW STRUCTURES AND EXISTING CONDITIONS FOR EXISTING STRUCTURES.
3. MOUNTING HARDWARE [BOLTS, NUTS, SPECIAL WASHERS (1/8" THK.), AND/OR CLIP ANGLES] SHALL BE 316 S.S., UNLESS OTHERWISE NOTED.
4. MATCH WEIR ELEVATION OF REMAINING UNITS WITH WEIRS THAT WILL NOT BE MODIFIED.
5. BACK WEIR TO CONCRETE WITH 1/4" THICK NEOPRENE FOAM GASKET.
6. ELEVATION OF V-NOTCH WEIRS IS AT THE BOTTOM OF THE NOTCH.

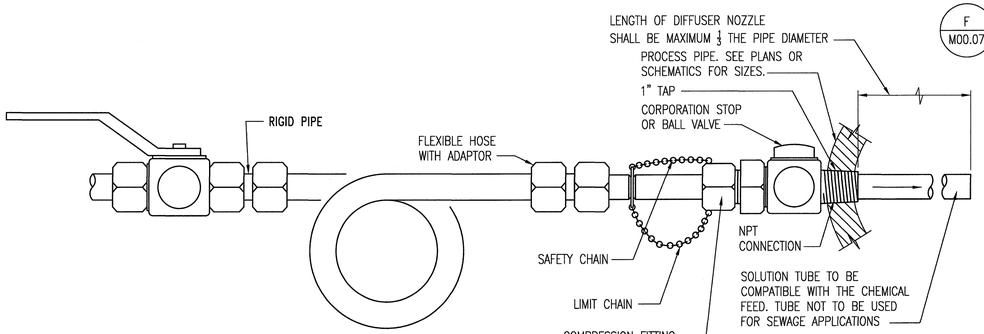

NOTES:
1. WHERE DIRECT TAP CAN NOT BE USED, A SERVICE SADDLE SHALL BE USED FOR CONNECTION.

G M00.07 CHEMICAL DIFFUSER DETAIL
SCALE: NONE

REVISIONS

CLIENT INFORMATION

SUSSEX COUNTY, DE
ENGINEERING
DEPARTMENT

INLAND BAYS RWF
PHASE #2 EXPANSION:
CONTRACT S19-10

KEY PLAN

GRAPHIC SCALES

SIGNATURE

ROBERT H MELEW LICENSE No. 21386 DELAWARE PROFESSIONAL ENGINEER
12/10/18

Whitman, Requardt & Associates, LLP
801 South Caroline Street, Baltimore, Maryland 21231

DETAILS AND SCHEDULE

DRAWING NO.

M00.07

SCALE: Drawing Scale		
DATE: DEC. 2018	SHEET 104 OF 217	
DES: MH	DRAWN: MH	CHECK: RHM

P:\114456-WRA\CAD\Sheets\M00.07 Details.dwg

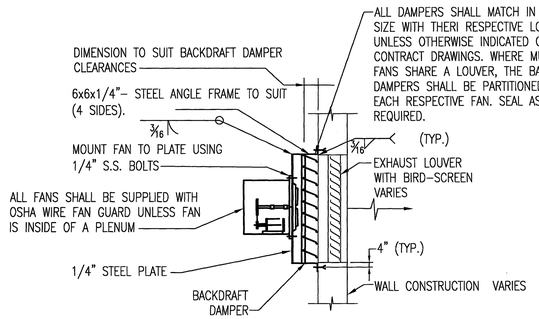

WALL MOUNT TYPICAL EXHAUST FAN DETAIL

A / M00.08 SCALE: NONE

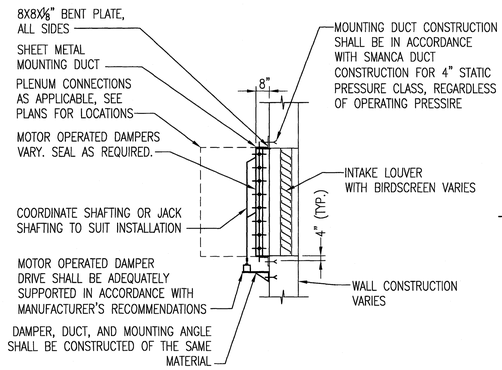

INTAKE DETAIL

B / M00.08 SCALE: NONE

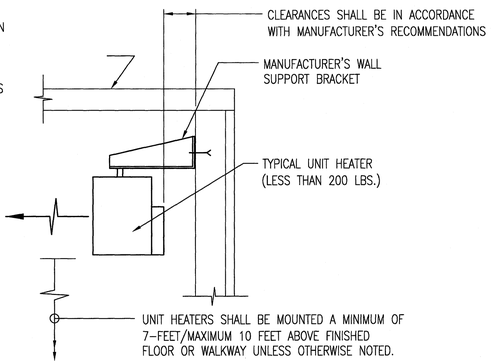

TYPICAL WALL MOUNT UNIT HEATER DETAIL

C / M00.08 SCALE: NONE

GENERAL NOTES:

1. SEE DRAWING M00.01 FOR NOTES, SYMBOLS AND ABBREVIATIONS.

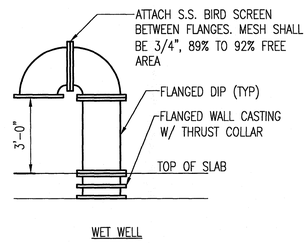

SEE PLANS AND SECTIONS FOR VENT SIZES

GOOSENECK VENT DETAIL

D / M00.08 SCALE: NONE

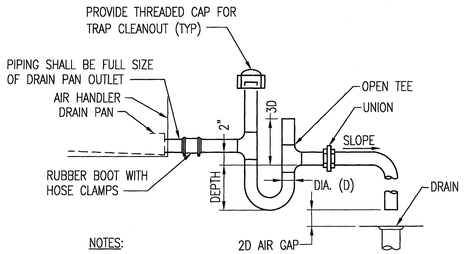

NOTES:

1. DEPTH OF TRAP SHALL BE EQUAL TO AIR HANDLER FAN STATIC PRESSURE OR 3.5 INCHES, WHICHEVER IS GREATER.
2. WHERE INDICATED ON PLANS, AHU DRAIN MAY BE ROUTED OUTSIDE TO A CONCRETE SPLASH BLOCK.

AHU CONDENSATE DRAIN

E / M00.08 SCALE: NONE

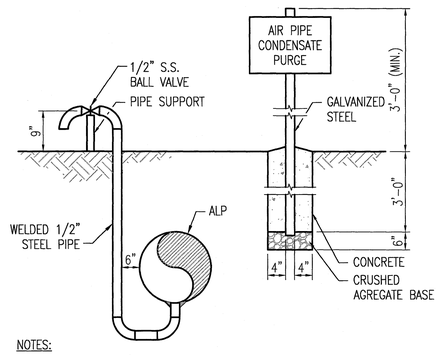

NOTES:

1. LOCATE AT BOTTOM OF PIPE AT END OF ALL PIPING HORIZONTAL RUNS.
2. REFER TO SPECIFICATION SECTION 10441 FOR EXTERIOR SIGN REQUIREMENTS.

CONDENSATE PURGE ASSEMBLY

F / M00.08 SCALE: NONE

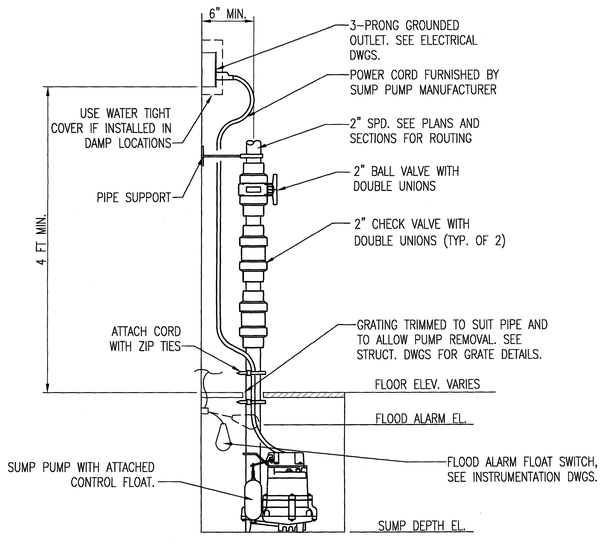

NOTES:

1. PIPE SUPPORTS SHALL NOT BE USED BETWEEN BALL VALVE AND PUMP TO ALLOW FOR COMPONENT REMOVAL.
2. PROVIDE BUSHING AS NECESSARY TO CONNECT PUMP TO 2" PIPING.

SIMPLEX SUMP PUMP DETAIL

H / M00.08 SCALE: NONE

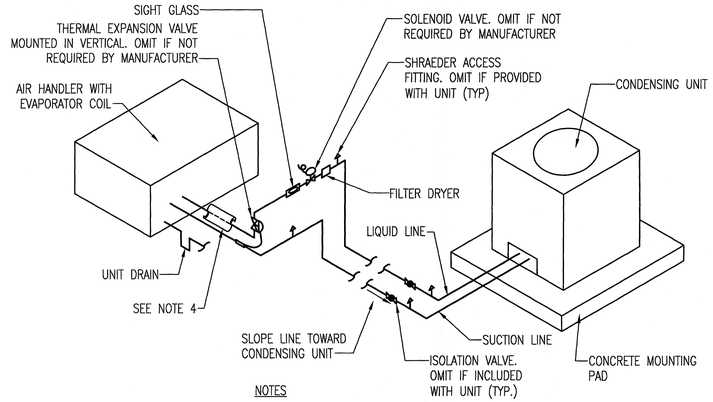

NOTES

1. OMIT ANY VALVES OR MATERIALS THAT ARE FURNISHED WITH THE UNIT.
2. REFRIGERANT PIPING SHALL BE SIZED BY SYSTEM MANUFACTURER.
3. PROVIDE RISER TRAPS WHEN CONDENSOR IS ABOVE EVAPORATOR.
4. INSULATE LIQUID LINE.

REFRIGERANT PIPING

G / M00.08 SCALE: NONE

REVISIONS		

CLIENT INFORMATION

SUSSEX COUNTY, DE
ENGINEERING
DEPARTMENT

INLAND BAYS RWF
PHASE #2 EXPANSION:
CONTRACT S19-10

KEY PLAN

GRAPHIC SCALES

SIGNATURE

ROBERT H MCLEW LICENSE No. 21386 PROFESSIONAL ENGINEER DELAWARE

12/10/18

Whitman, Requardt & Associates, LLP
801 South Caroline Street, Baltimore, Maryland 21231

DETAILS

DRAWING NO.

M00.08

SCALE: NO SCALE		
DATE: DEC. 2018		SHEET 105 OF 217
DES: MH	DRAWN: MH	CHECK: RHM

P:\Projects\Sussex County\Inland Bays RWF Phase #2 Expansion\Contract S19-10\Drawings\Details\M00.08.dwg

GENERAL SHEET NOTES

1. SEE M00.01 FOR GENERAL NOTES, ABBREVIATIONS, AND LEGEND.

[X] SPECIFIC NOTES:

1. SCREEN MANUFACTURER TO PROVIDE HEAT TRACING TO SCREENING CONVEYOR AND SCREENS AS NECESSARY.
2. CONTRACTOR TO PROVIDE HEAT TRACING TO ALL EXPOSED UTILITY WATER PIPING.

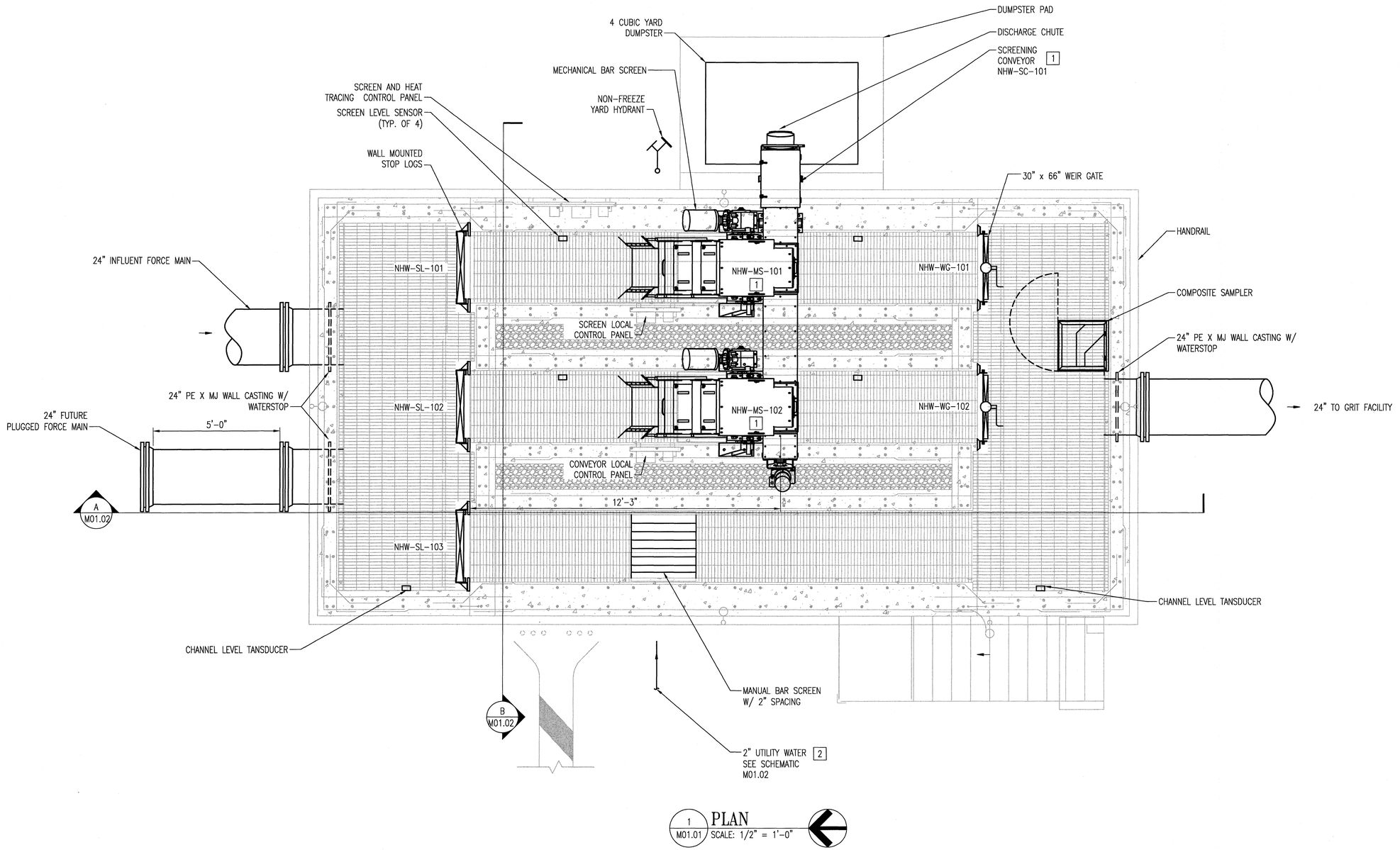

1 M01.01 PLAN
SCALE: 1/2" = 1'-0"

REVISIONS

CLIENT INFORMATION

SUSSEX COUNTY, DE
ENGINEERING DEPARTMENT

INLAND BAYS RWF
PHASE #2 EXPANSION:
CONTRACT S19-10

KEY PLAN

GRAPHIC SCALES

0 1' 2' 4'
SCALE: 1/2" = 1'-0"

SIGNATURE

ROBERT H McLEAN LICENSE No. 21386 DELAWARE PROFESSIONAL ENGINEER
12/10/18

WRA
Whitman, Requardt & Associates, LLP
801 South Caroline Street, Baltimore, Maryland 21231

NORTH HEADWORKS PLAN

DRAWING NO.

M01.01

SCALE: AS SHOWN		
DATE: DEC. 2018	SHEET 106 OF 217	
DES: LAQ	DRAWN: MH	CHECK: RHM

GENERAL SHEET NOTES

1. SEE M00.01 FOR GENERAL NOTES, ABBREVIATIONS, AND LEGEND.

[X] SPECIFIC NOTES:

1. CONTRACTOR SHALL COORDINATE THE UTILITY WATER PIPE SIZE W/ SCREEN MANUFACTURER UTILITY WATER CONNECTIONS.

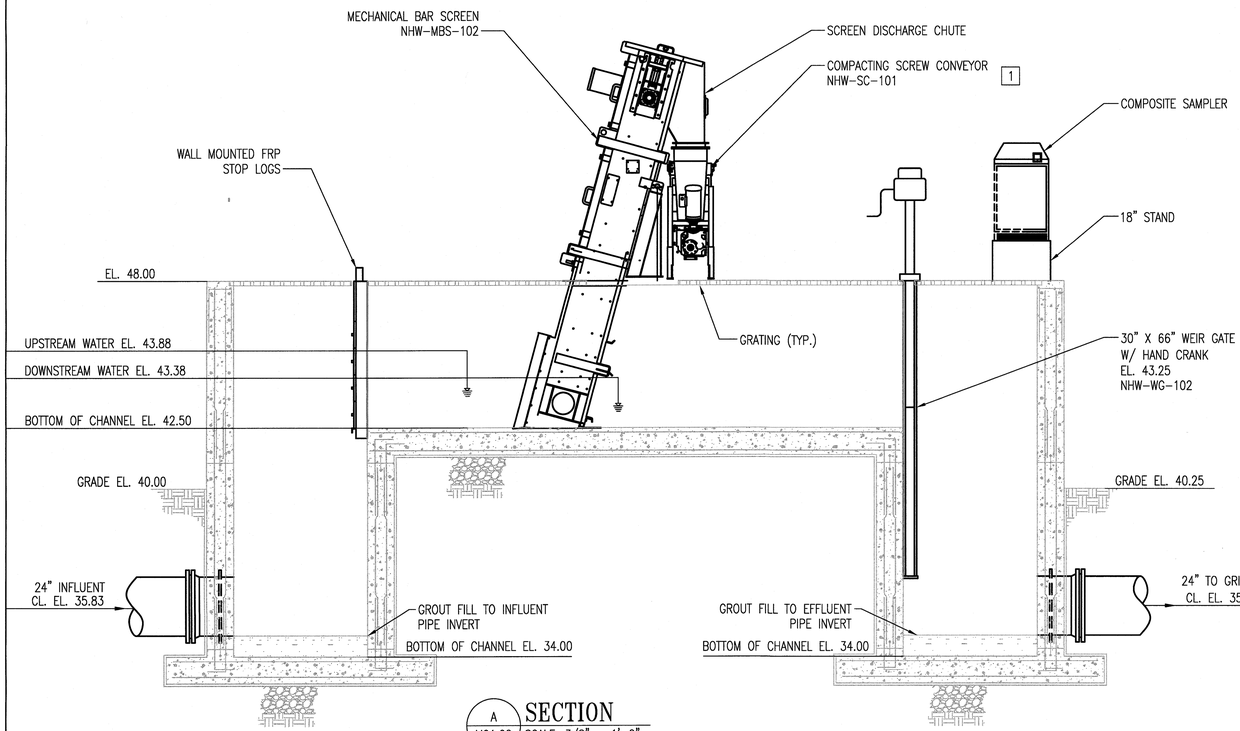

A / M01.02 SECTION
SCALE: 3/8" = 1'-0"
REF: M01.01

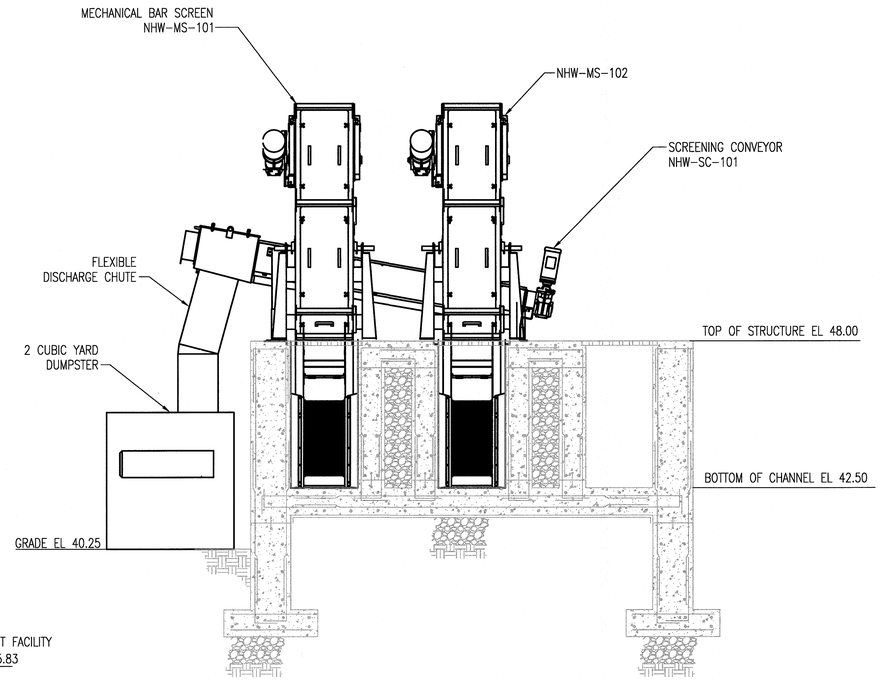

B / M01.02 SECTION
SCALE: 3/8" = 1'-0"
REF: M01.01

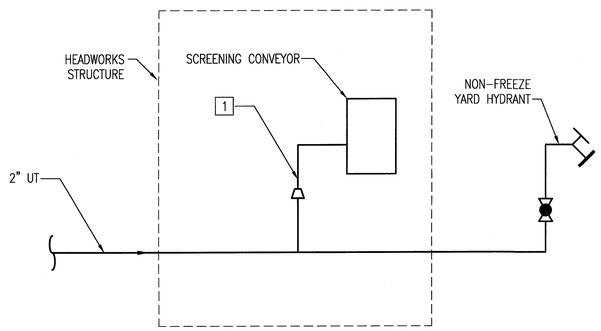

1 / M01.02 UTILITY WATER SCHEMATIC
SCALE: NO SCALE
REF: M01.01

REVISIONS

CLIENT INFORMATION

SUSSEX COUNTY, DE
ENGINEERING
DEPARTMENT

INLAND BAYS RWF
PHASE #2 EXPANSION:
CONTRACT S19-10

KEY PLAN

GRAPHIC SCALES

0 1' 2' 3' 5'
SCALE: 3/8" = 1'-0"

SIGNATURE

ROBERT H McLEAN
LICENSE
No. 21386
DELAWARE
PROFESSIONAL ENGINEER
12/10/18

Whitman, Requardt & Associates, LLP
801 South Caroline Street, Baltimore, Maryland 21231

NORTH HEADWORKS SECTIONS

DRAWING NO.

M01.02

SCALE: AS SHOWN		
DATE: DEC. 2018	SHEET 107 OF 217	
DES: LAQ	DRAWN: MH	CHECK: RHM

P:\Projects\Sussex County\Contract Documents\Drawings\Plan Sheets\M01.02_81401_1405602801-02.dwg

GENERAL SHEET NOTES

1. SEE M00.01 FOR GENERAL NOTES, ABBREVIATIONS, AND LEGEND.

[X] SPECIFIC NOTES:

1. ALL PIPING UNDER SLAB SHALL BE CONCRETE ENCASED.

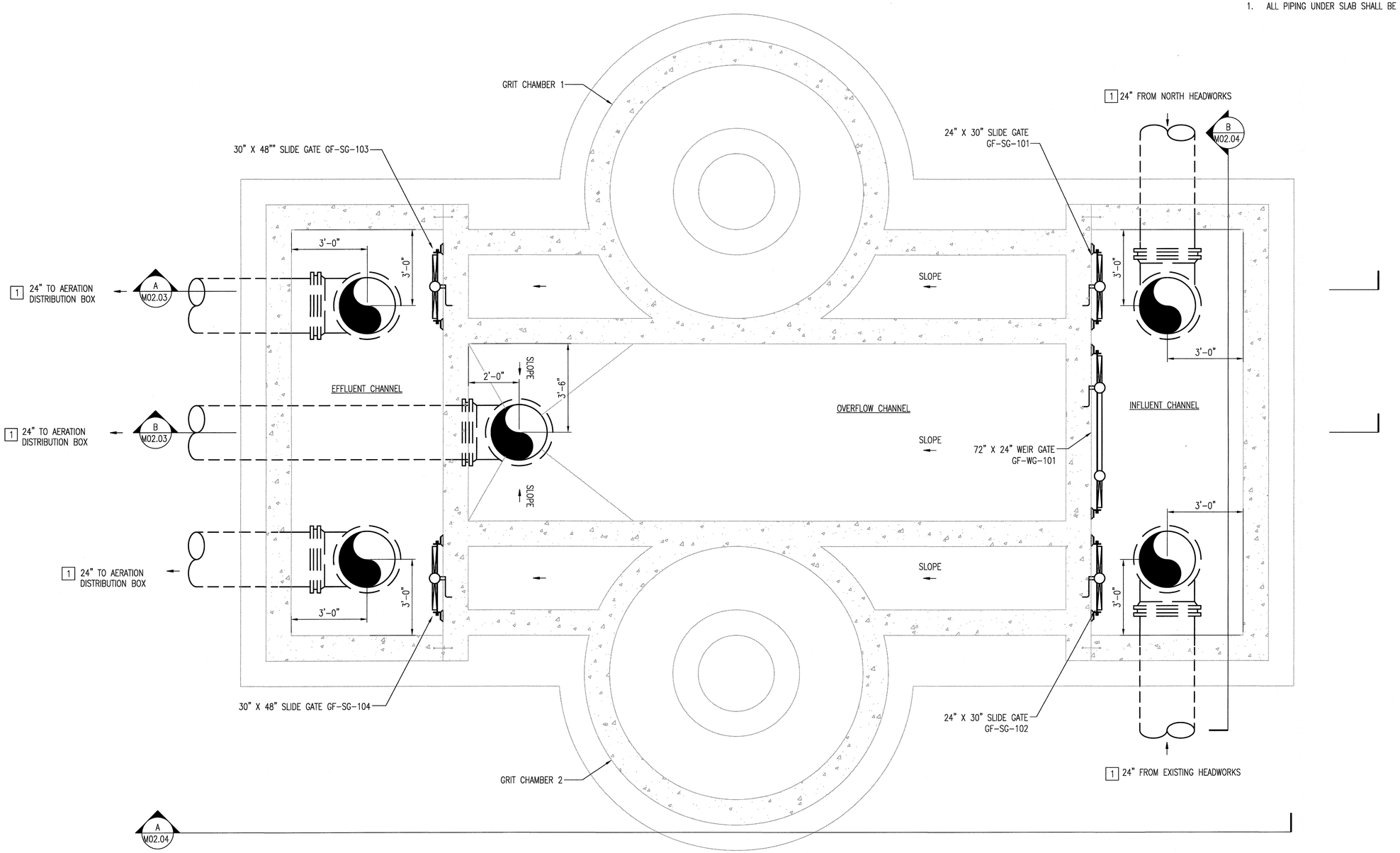

1 M02.01 GRIT FACILITY LOWER LEVEL PLAN
SCALE: 1/2" = 1'-0"

REVISIONS		

CLIENT INFORMATION

SUSSEX COUNTY, DE
ENGINEERING
DEPARTMENT

INLAND BAYS RWF
PHASE #2 EXPANSION:
CONTRACT S19-10

KEY PLAN

GRAPHIC SCALES

0 1' 2' 4'
SCALE: 1/2" = 1'-0"

SIGNATURE

ROBERT H McLAN
LICENSE
No. 21386
DELAWARE
PROFESSIONAL ENGINEER
12/10/18

Whitman, Requardt & Associates, LLP
801 South Caroline Street, Baltimore, Maryland 21231

GRIT FACILITY LOWER LEVEL PLAN

DRAWING NO.

M02.01

SCALE: AS SHOWN		
DATE: DEC. 2018		SHEET 108 OF 217
DES: LAQ	DRAWN: MH	CHECK: RHM

P:\Projects\Sussex County\Inland Bays RWF Phase 2 Expansion\Design\Drawings\Publish Set\M02.01 GRIT FACILITY LOWER LEVEL PLAN.dwg

GENERAL SHEET NOTES

1. SEE M00.01 FOR GENERAL NOTES, ABBREVIATIONS, AND LEGEND.

[X] SPECIFIC NOTES:

1. ALL EXPOSED PIPING SHALL HAVE HEAT TRACING AND INSULATION.

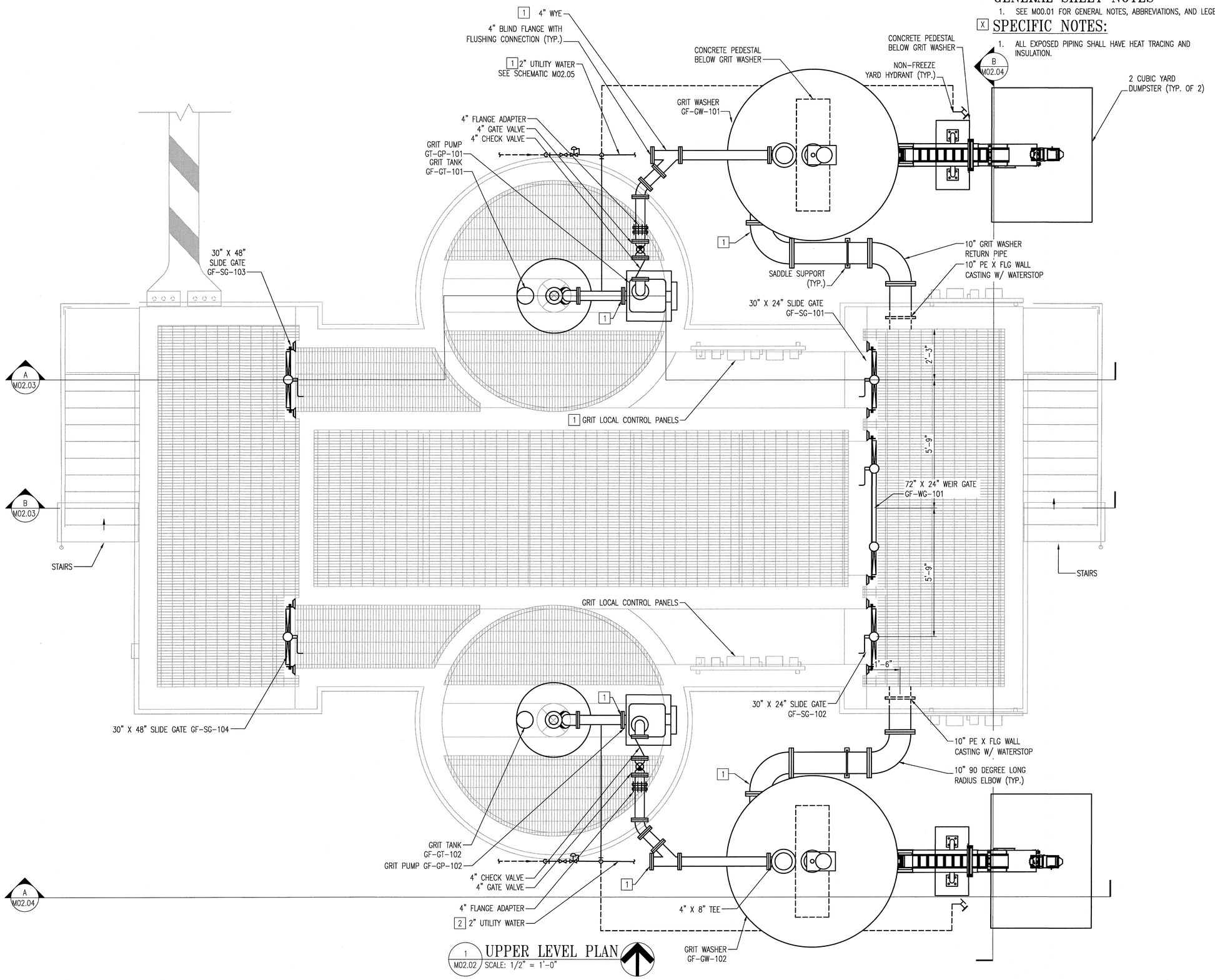

1 M02.02 UPPER LEVEL PLAN
SCALE: 1/2" = 1'-0"

REVISIONS		

CLIENT INFORMATION

SUSSEX COUNTY, DE
ENGINEERING
DEPARTMENT

INLAND BAYS RWF
PHASE #2 EXPANSION:
CONTRACT S19-10

KEY PLAN

GRAPHIC SCALES

0 1' 2' 4'
SCALE: 1/2" = 1'-0"

SIGNATURE

ROBERT H. MCLEAN LICENSE No. 21386 PROFESSIONAL ENGINEER DELAWARE
12/10/18

Whitman, Requardt & Associates, LLP
801 South Caroline Street, Baltimore, Maryland 21231

GRIT FACILITY
UPPER LEVEL PLAN

DRAWING NO.

M02.02

SCALE: AS SHOWN		
DATE: DEC. 2018		SHEET 109 OF 217
DES: LAQ	DRAWN: MH	CHECK: RHM

File Name: I:\Whitman-Requardt\Projects\Sussex Co\Inland Bays\Sheets\Master Set\M02.02 Plot Date: 12/10/2018 - 6:14:45 I:\4256\03\M02-02.dwg

GENERAL SHEET NOTES

1. SEE M00.01 FOR GENERAL NOTES, ABBREVIATIONS, AND LEGEND.

[X] SPECIFIC NOTES:

1. ALL PIPING UNDER SLAB SHALL BE CONCRETE ENCASED.
2. ALL EXPOSED PIPING SHALL BE HEAT TRACED AND INSULATED.

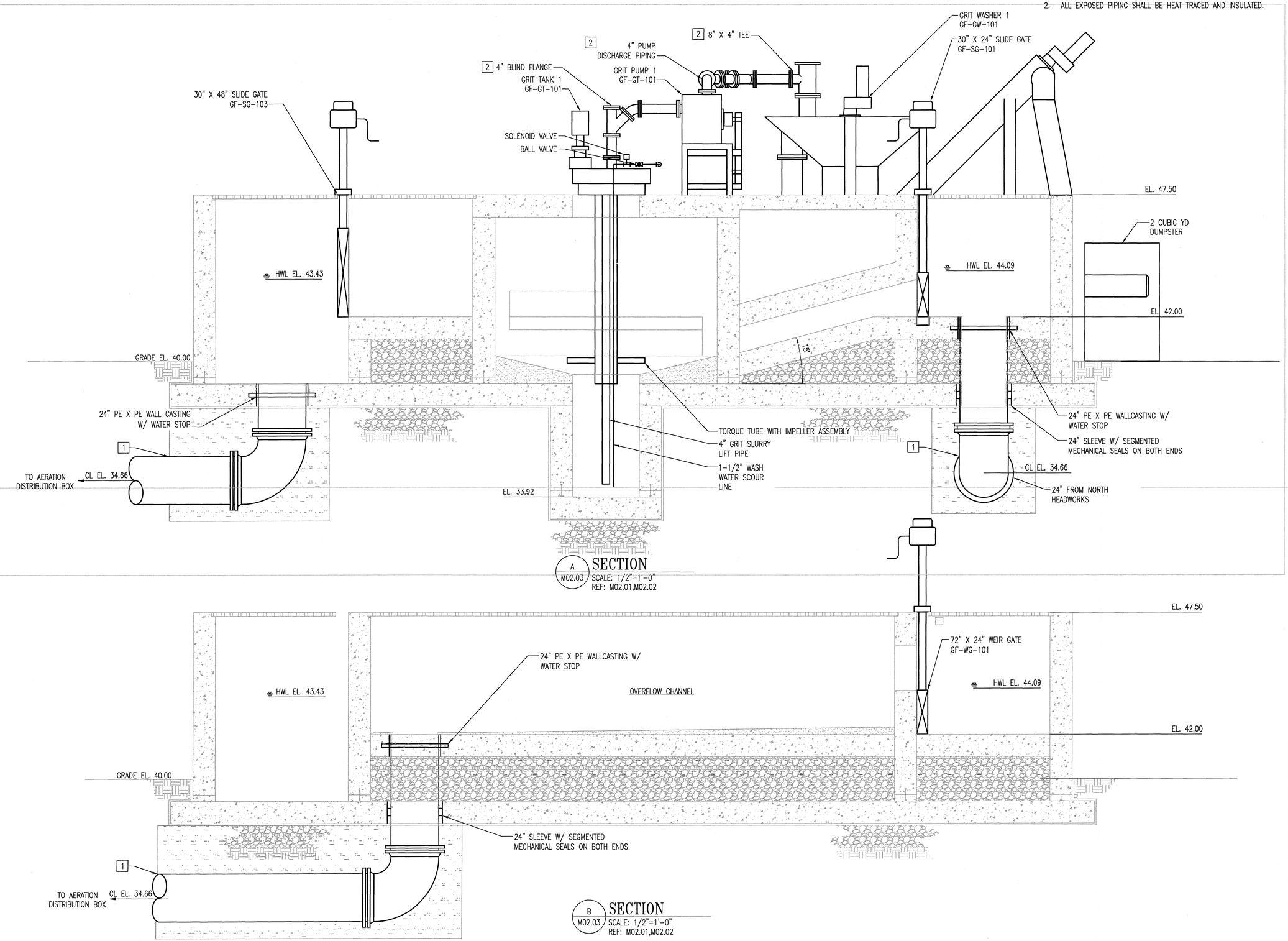

A M02.03 SECTION
SCALE: 1/2"=1'-0"
REF: M02.01,M02.02

B M02.03 SECTION
SCALE: 1/2"=1'-0"
REF: M02.01,M02.02

REVISIONS		

CLIENT INFORMATION

SUSSEX COUNTY, DE
ENGINEERING
DEPARTMENT

INLAND BAYS RWF
PHASE #2 EXPANSION:
CONTRACT S19-10

KEY PLAN

GRAPHIC SCALES

0 1' 2' 4'
SCALE: 1/2" = 1'-0"

SIGNATURE

ROBERT H MCKEW
LICENSE
No. 21386
PROFESSIONAL ENGINEER
STATE OF DELAWARE
12/10/18

Whitman, Requardt & Associates, LLP
801 South Caroline Street, Baltimore, Maryland 21231

GRIT FACILITY SECTIONS

DRAWING NO.

M02.03

SCALE: AS SHOWN		
DATE: DEC. 2018	SHEET 110 OF 217	
DES: MH	DRAWN: MH	CHECK: RHM

G:\Projects\Sussex County\Inland Bays RWF Phase 2 Expansion\Design\Drawings\Active\M02.03_GRIT FACILITY SECTIONS.dwg

GENERAL SHEET NOTES

1. SEE M00.01 FOR GENERAL NOTES, ABBREVIATIONS, AND LEGEND.

[X] SPECIFIC NOTES:

1. ALL PIPING UNDER SLAB SHALL BE CONCRETE ENCASED.
2. ALL EXPOSED PIPING SHALL BE HEAT TRACED, INSULATED, AND SUPPORTED AS NECESSARY.

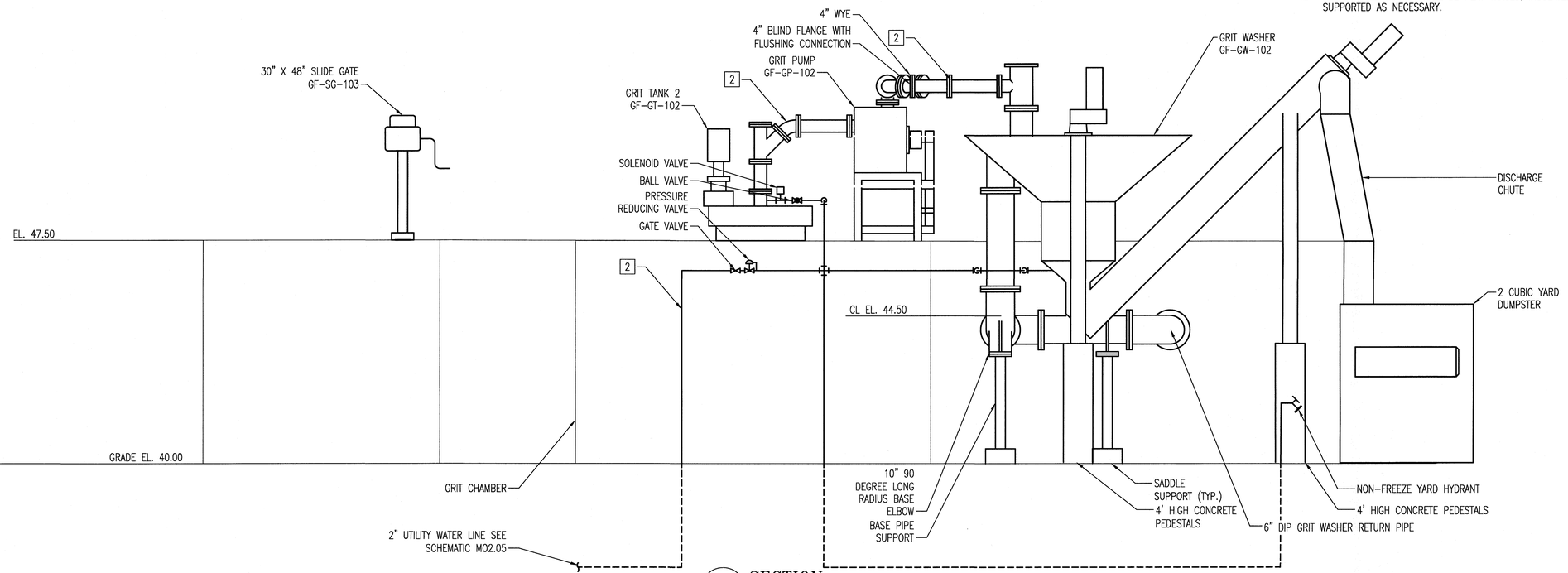

A M02.04 SECTION
SCALE: 1/2"=1'-0"
REF: M02.01,M02.02

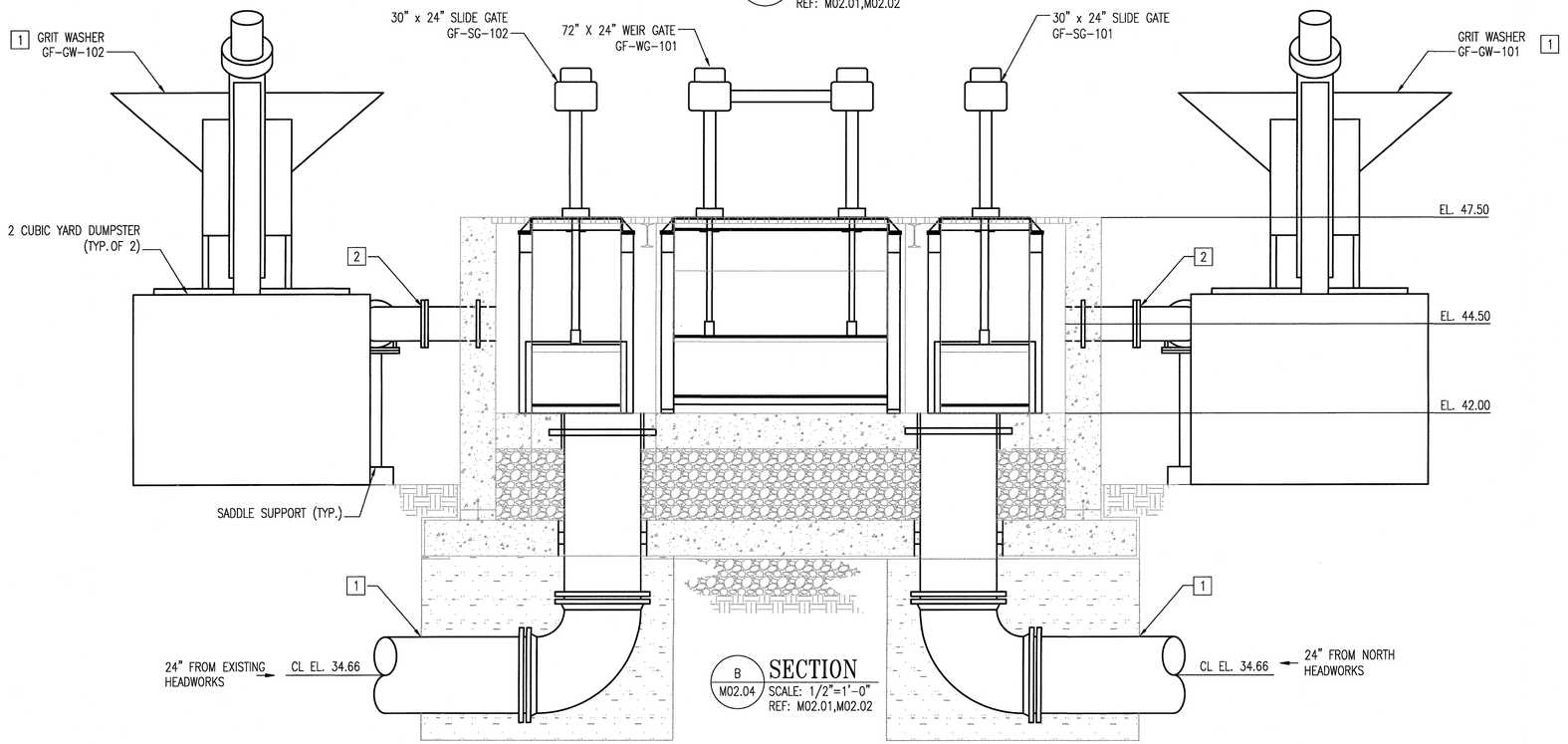

B M02.04 SECTION
SCALE: 1/2"=1'-0"
REF: M02.01,M02.02

REVISIONS

CLIENT INFORMATION

SUSSEX COUNTY, DE
ENGINEERING
DEPARTMENT

INLAND BAYS RWF
PHASE #2 EXPANSION:
CONTRACT S19-10

KEY PLAN

GRAPHIC SCALES

0 1' 2' 4'
SCALE: 1/2" = 1'-0"

SIGNATURE

ROBERT H MCLEAN LICENSE No. 21388 DELAWARE PROFESSIONAL ENGINEER
12/10/18

WRA
Whitman, Requardt & Associates, LLP
801 South Caroline Street, Baltimore, Maryland 21231

GRIT FACILITY SECTIONS

DRAWING NO.

M02.04

SCALE: AS SHOWN		
DATE: DEC. 2018		SHEET 111 OF 217
DES: LAQ	DRAWN: MH	CHECK: RHM

GENERAL SHEET NOTES

1. SEE M00.01 FOR GENERAL NOTES, ABBREVIATIONS, AND LEGEND.

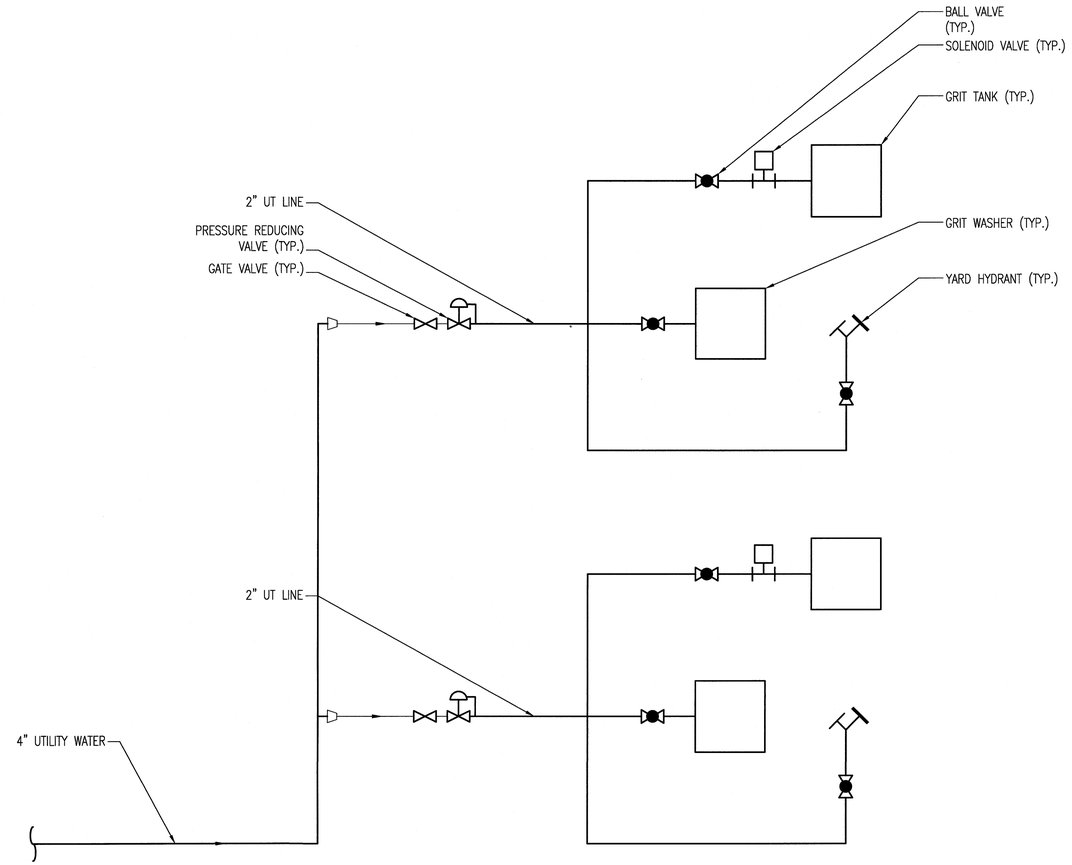

1 / M02.05 UTILITY WATER SCHEMATIC
SCALE: NO SCALE
REF: M02.02, M02.03, M02.04

REVISIONS

CLIENT INFORMATION

SUSSEX COUNTY, DE
ENGINEERING
DEPARTMENT

INLAND BAYS RWF
PHASE #2 EXPANSION:
CONTRACT S19-10

KEY PLAN

GRAPHIC SCALES

SIGNATURE

ROBERT H McLEAN
LICENSE
No. 21386
DELAWARE
PROFESSIONAL ENGINEER
12/10/18

Whitman, Requardt & Associates, LLP
801 South Caroline Street, Baltimore, Maryland 21231

GRIT FACILITY
SCHEMATIC

DRAWING NO.

M02.05

SCALE: AS SHOWN		
DATE: DEC. 2018	SHEET 112 OF 217	
DES: MH	DRAWN: MH	CHECK: RHM

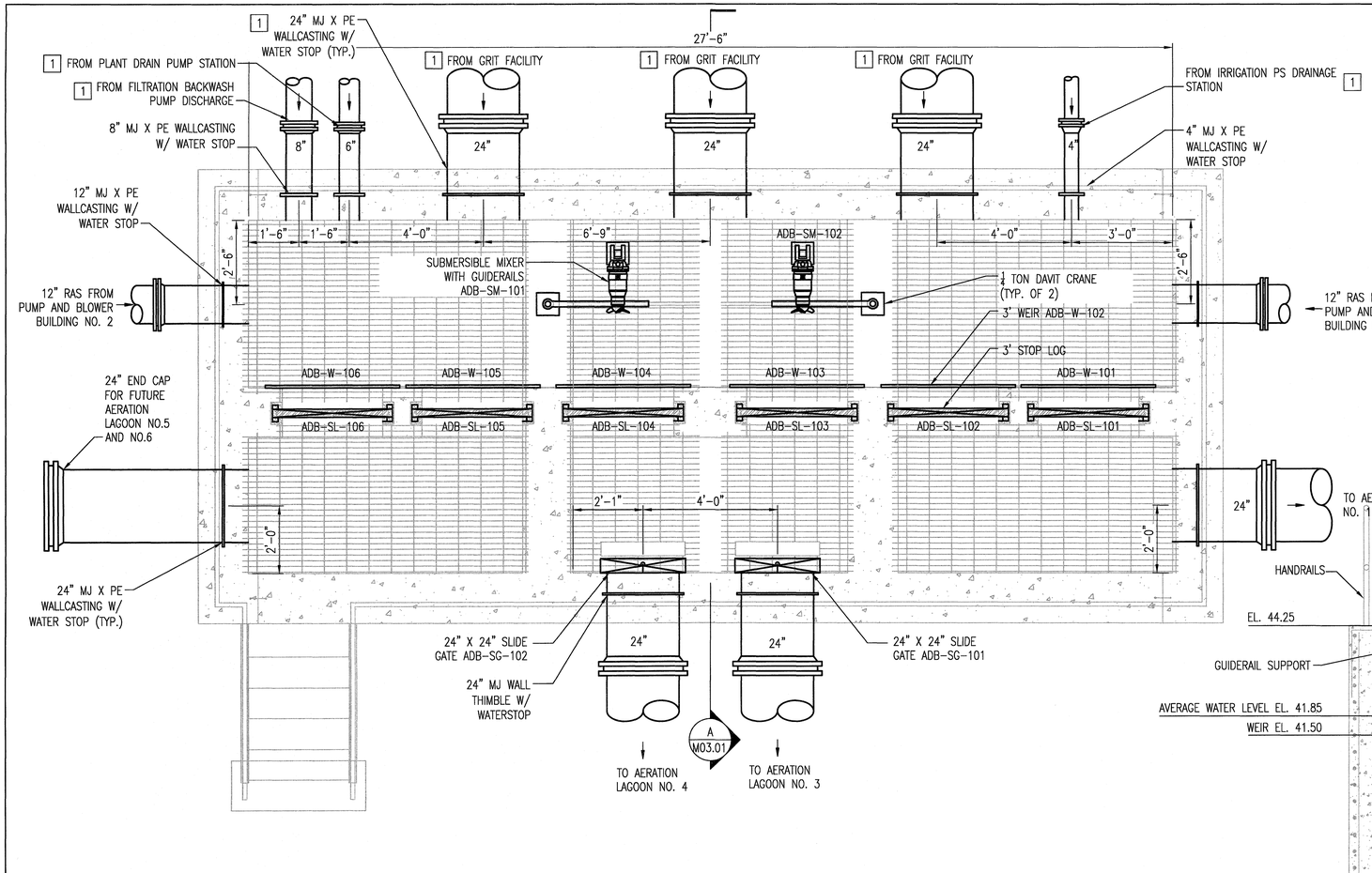

1 M03.01 PLAN SCALE: 1/2"=1'-0"

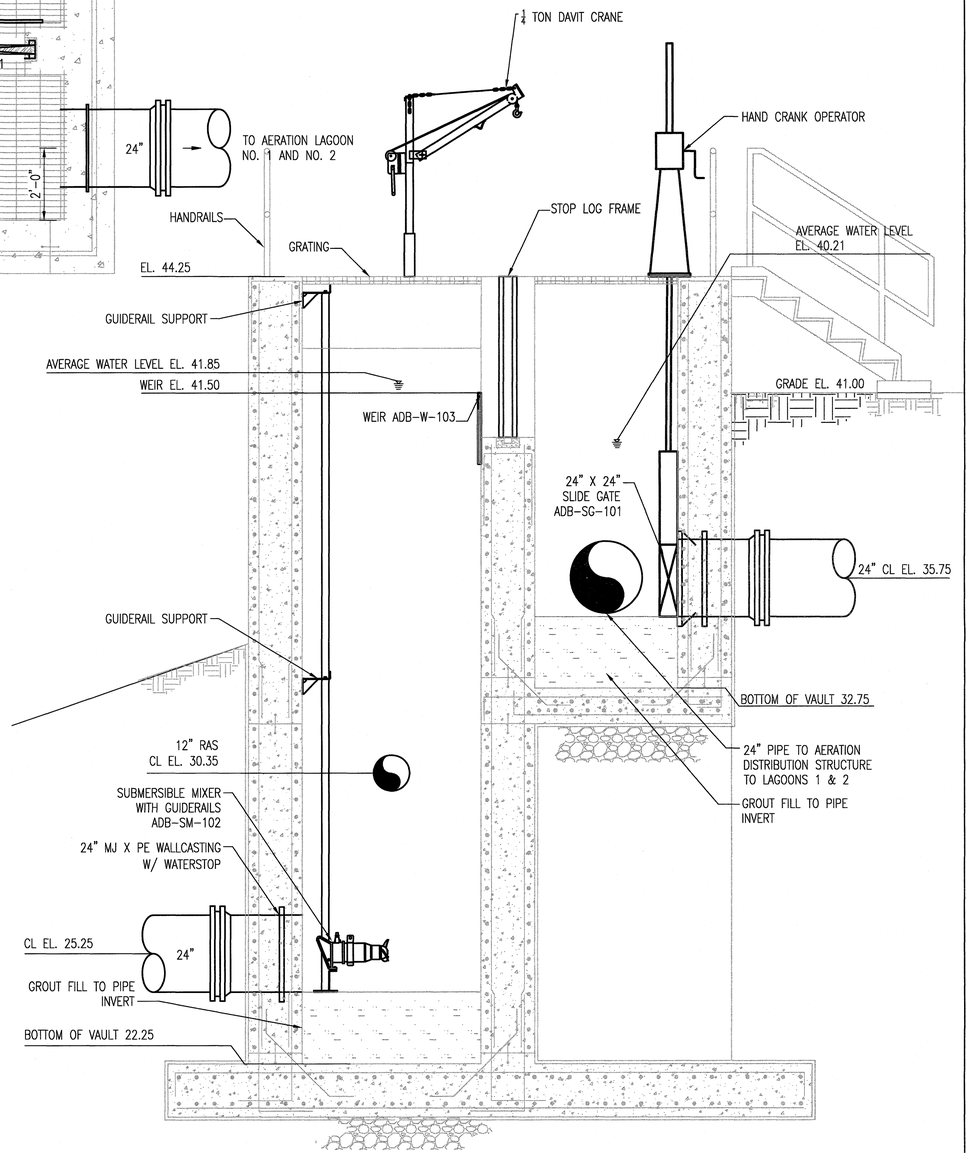

A M03.01 SECTION SCALE: 1/2"=1'-0"

GENERAL SHEET NOTES

1. SEE M00.01 FOR GENERAL NOTES, ABBREVIATIONS, AND LEGEND.

X SPECIFIC NOTES:

1. PIPE PENETRATIONS ON THE NORTH SIDE HAVE THE SAME CENTERLINE ELEVATION EL. 25.25.

REVISIONS

CLIENT INFORMATION

SUSSEX COUNTY, DE
ENGINEERING
DEPARTMENT

INLAND BAYS RWF
PHASE #2 EXPANSION:
CONTRACT S19-10

KEY PLAN

GRAPHIC SCALES

0 1' 2' 4'
SCALE: 1/2" = 1'-0"

SIGNATURE

ROBERT H McLEAN LICENSE No. 21386 STATE OF DELAWARE PROFESSIONAL ENGINEER
7/11/19

WRA
Whitman, Requardt & Associates, LLP
801 South Caroline Street, Baltimore, Maryland 21231

AERATION DISTRICTION STRUCTURE PLAN AND SECTION

DRAWING NO.

M03.01

SCALE: AS SHOWN		
DATE: JULY 2019		SHEET 113 OF 217
DES: MH	DRAWN: MH	CHECK: RHM

M:\446\5-0283 CAPITAL\256828\03-Dwg\M03.01.dwg

GENERAL SHEET NOTES

1. SEE M00.01 FOR GENERAL NOTES, ABBREVIATIONS, AND LEGEND.

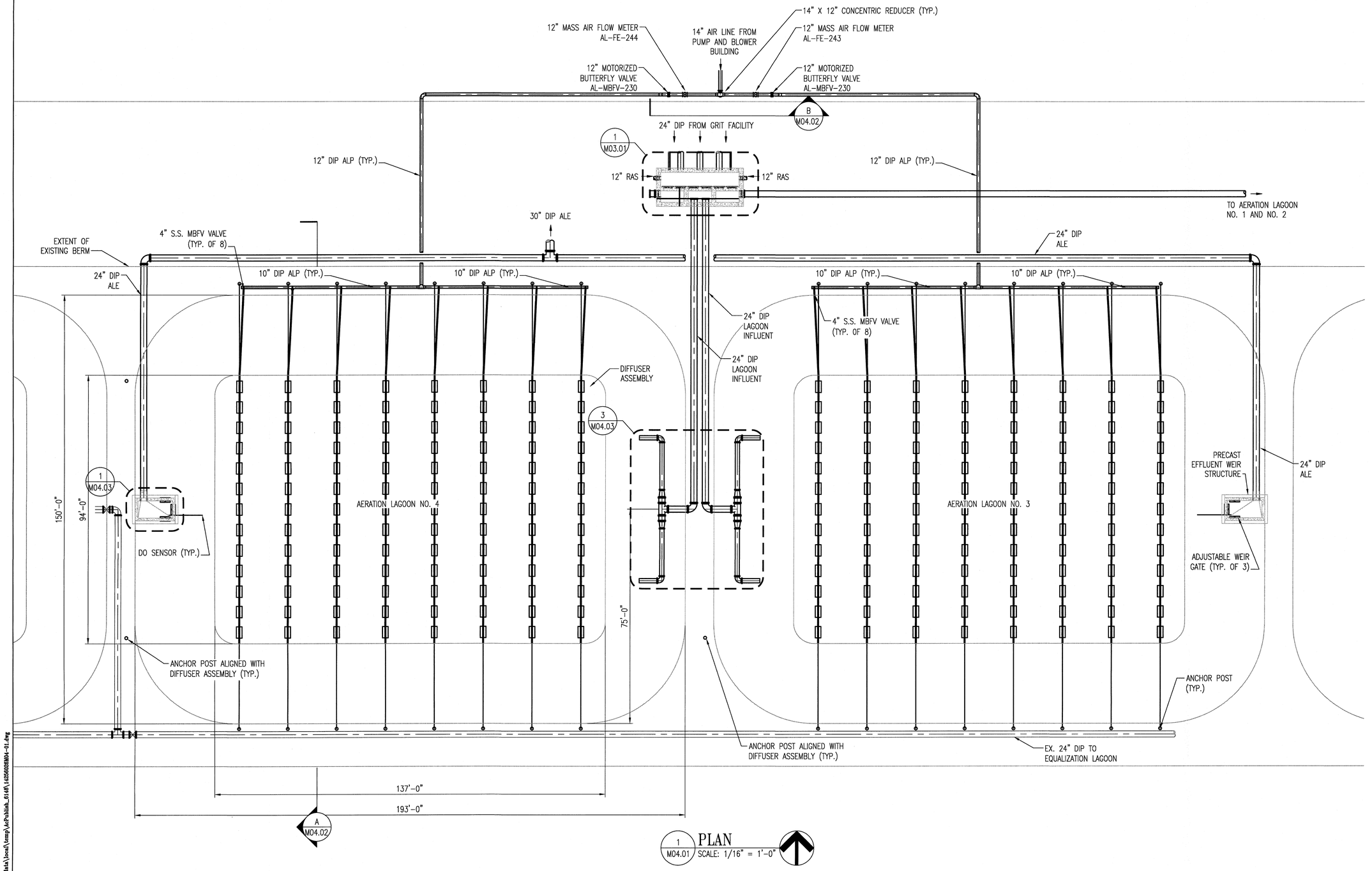

1 M04.01 PLAN
SCALE: 1/16" = 1'-0"

C:\Users\mhernandez\appdata\local\temp\AcPublish_6148\14256026M04-01.dwg

REVISIONS		

CLIENT INFORMATION

SUSSEX COUNTY, DE
ENGINEERING
DEPARTMENT

INLAND BAYS RWF
PHASE #2 EXPANSION:
CONTRACT S19-10

KEY PLAN

GRAPHIC SCALES

0 8' 16' 32'
SCALE: 1/16" = 1'-0"

SIGNATURE

ROBERT H McLEAN LICENSE No. 21386 DELAWARE PROFESSIONAL ENGINEER
12/10/18

WRA
Whitman, Requardt & Associates, LLP
801 South Caroline Street, Baltimore, Maryland 21231

AERATION LAGOON
3 & 4 PLAN

DRAWING NO.

M04.01

SCALE: AS SHOWN		
DATE: DEC. 2018	SHEET 114 OF 217	
DES: RHM	DRAWN: MH	CHECK: DCC

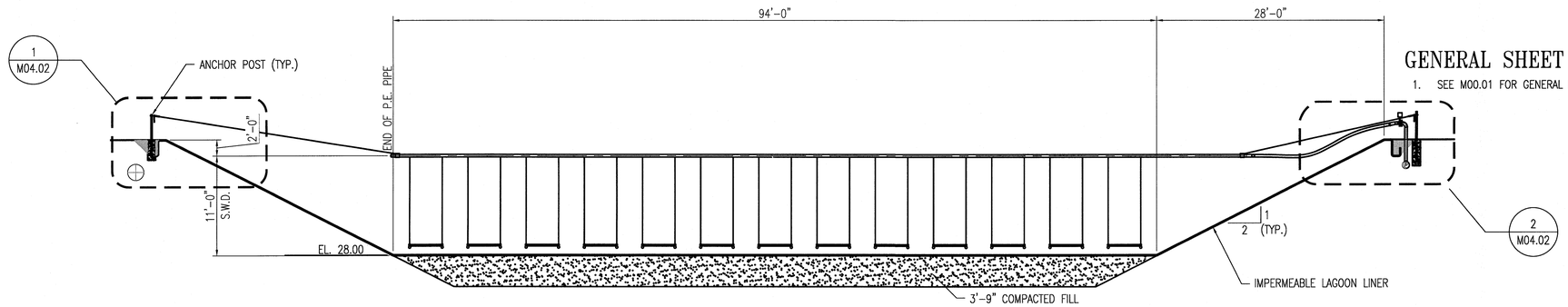

GENERAL SHEET NOTES

1. SEE M00.01 FOR GENERAL NOTES, ABBREVIATIONS, AND LEGEND.

A / M04.02 **AERATION LAGOON SECTION**
SCALE: 1/8" = 1'-0"
REF: M04.01

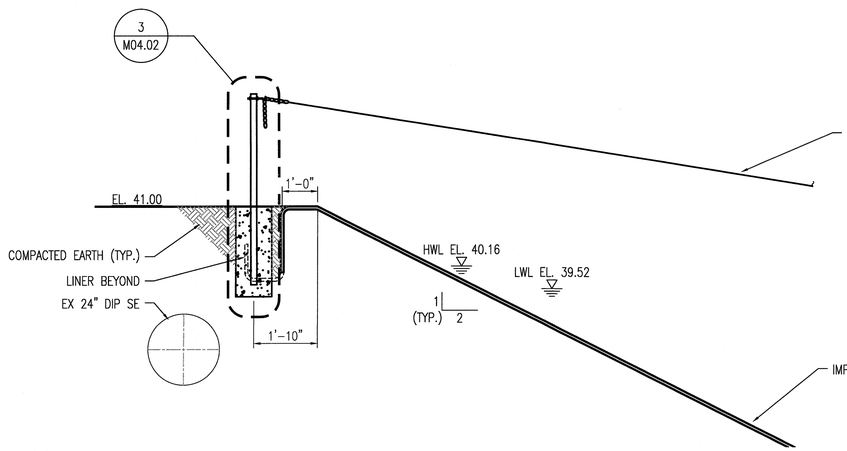

1 / M04.02 **TYPICAL SOUTH BERM DETAIL**
SCALE: 1/2" = 1'-0"
REF: M04.01

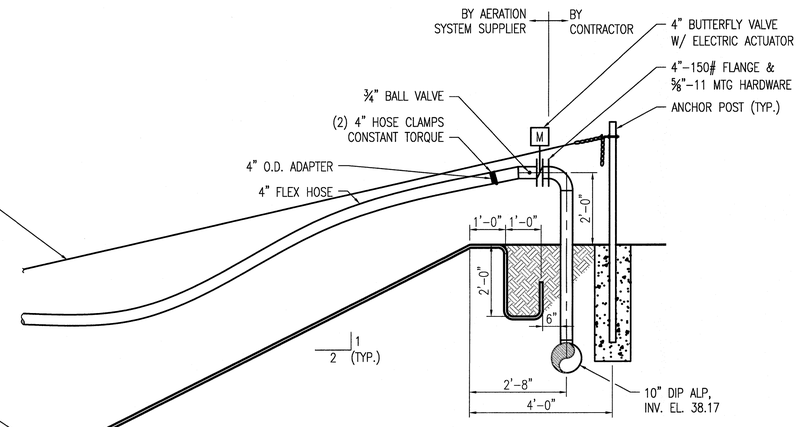

2 / M04.02 **TYPICAL NORTH BERM DETAIL**
SCALE: 1/2" = 1'-0"
REF: M04.01

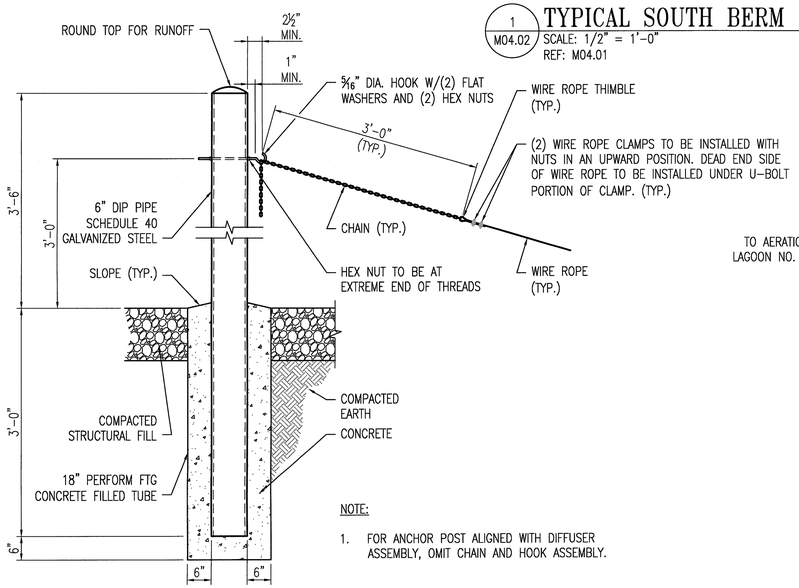

NOTE:

1. FOR ANCHOR POST ALIGNED WITH DIFFUSER ASSEMBLY, OMIT CHAIN AND HOOK ASSEMBLY.

3 / M04.02 **BOLLARD & CHAIN DETAIL**
SCALE: NOT TO SCALE

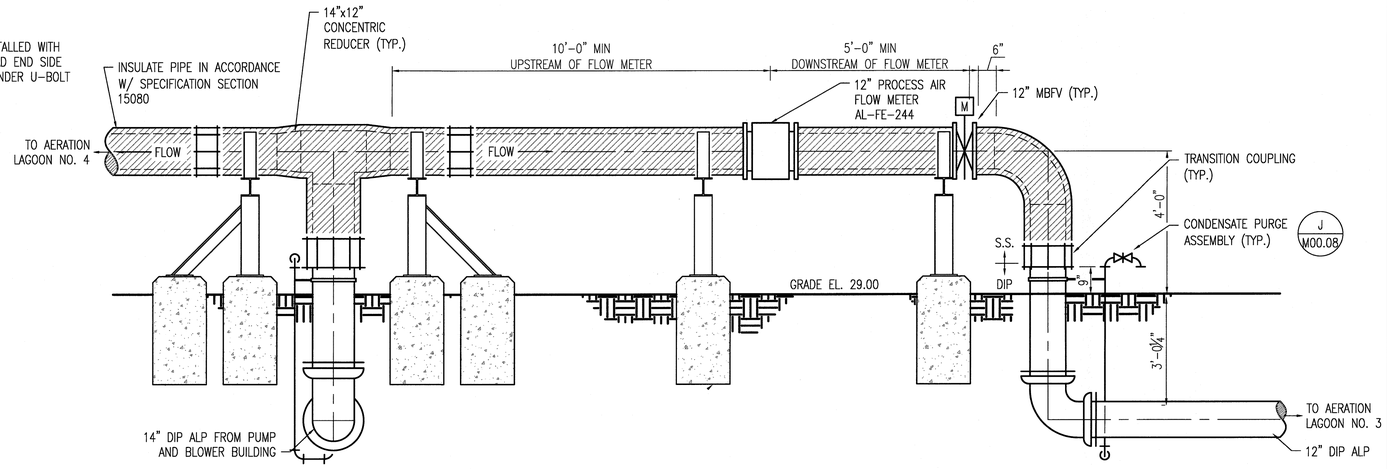

B / M04.02 **PROCESS AIR FLOW METER SECTION**
SCALE: 1/2" = 1'-0"
REF: M04.01

NOTE:

1. 12" MBFV AND AIR FLOW METER BY AERATION SYSTEM SUPPLIER.

REVISIONS

CLIENT INFORMATION

SUSSEX COUNTY, DE
ENGINEERING
DEPARTMENT

INLAND BAYS RWF
PHASE #2 EXPANSION:
CONTRACT S19-10

KEY PLAN

GRAPHIC SCALES

0 1' 2' 4'
SCALE: 1/2" = 1'-0"

0 4' 8' 16'
SCALE: 1/8" = 1'-0"

SIGNATURE

ROBERT H McLEAN
LICENSE
No. 21386
DELAWARE
PROFESSIONAL ENGINEER
12/10/18

WRA
Whitman, Requardt & Associates, LLP
801 South Caroline Street, Baltimore, Maryland 21231

AERATION LAGOONS 3 & 4
SECTION AND DETAILS

DRAWING NO.
M04.02

SCALE: AS SHOWN		
DATE: DEC. 2018	SHEET 115 OF 217	
DES: MH	DRAWN: MH	CHECK: RHM

C:\Users\mhernandez\appdata\local\temp\AcPublish_6148\14256026M04-02.dwg

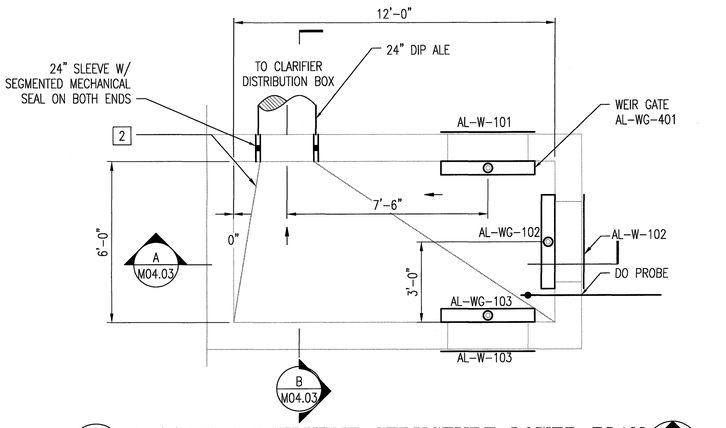

1 M04.03 LAGOON 4 EFFLUENT STRUCTURE LOWER PLAN 4
SCALE: 3/8"=1'-0"
REF: M04.01

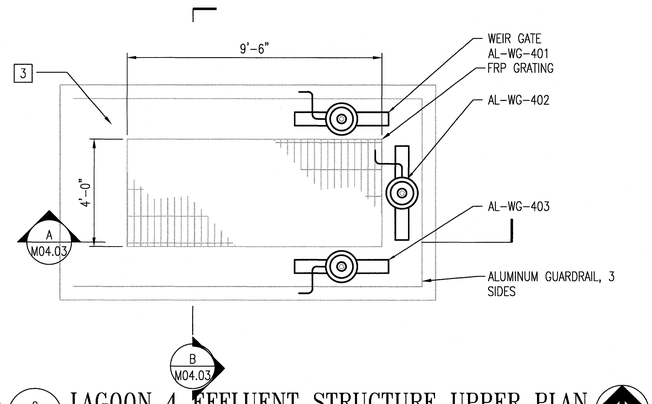

2 M04.03 LAGOON 4 EFFLUENT STRUCTURE UPPER PLAN 4
SCALE: 3/8"=1'-0"
REF: M04.01

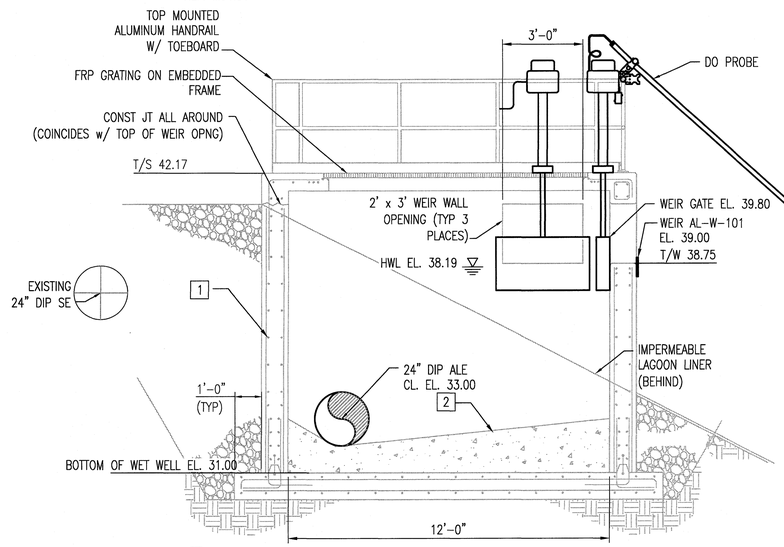

A M04.03 LAGOON 4 EFFLUENT STRUCTURE SECTION 4
SCALE: 3/8"=1'-0"
REF: M04.03

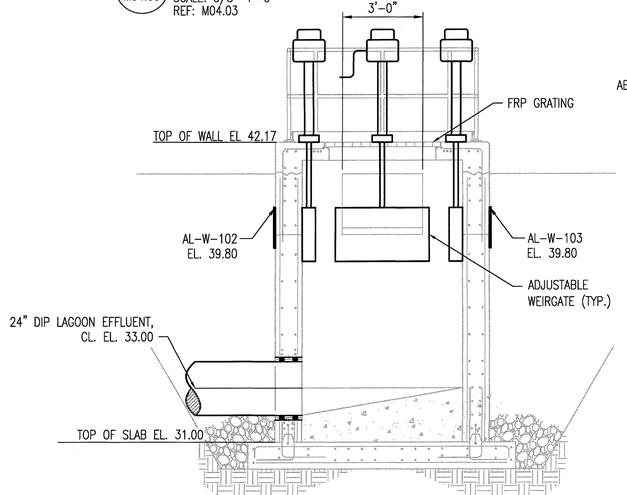

B M04.03 LAGOON 4 EFFLUENT STRUCTURE SECTION 4
SCALE: 3/8"=1'-0"
REF: M04.03

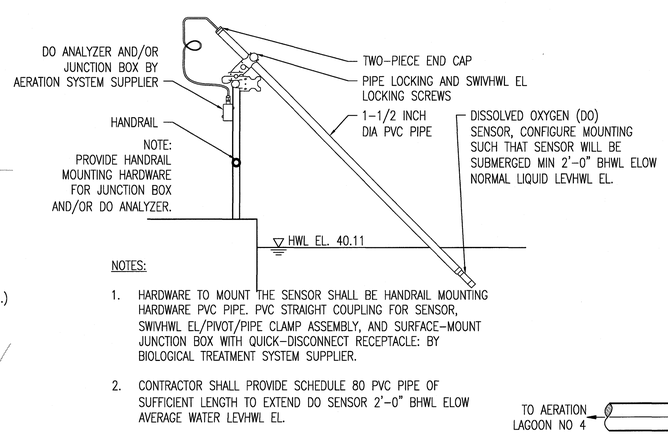

NOTES:

1. HARDWARE TO MOUNT THE SENSOR SHALL BE HANDRAIL MOUNTING HARDWARE PVC PIPE. PVC STRAIGHT COUPLING FOR SENSOR, SWIVHWL EL/PIVOT/PIPE CLAMP ASSEMBLY, AND SURFACE-MOUNT JUNCTION BOX WITH QUICK-DISCONNECT RECEPTACLE: BY BIOLOGICAL TREATMENT SYSTEM SUPPLIER.
2. CONTRACTOR SHALL PROVIDE SCHEDULE 80 PVC PIPE OF SUFFICIENT LENGTH TO EXTEND DO SENSOR 2'-0" BHWL ELOW AVERAGE WATER LEVHWL EL.

3 M04.03 TYPICAL DISSOLVED OXYGEN (DO) SENSOR MOUNTING DETAIL
SCALE: NOT TO SCALE

GENERAL SHEET NOTES

1. SEE M00.01 FOR GENERAL NOTES, ABBREVIATIONS, AND LEGEND.

X SPECIFIC NOTES:

1. PROCESS LAGOON EFFLUENT PRECAST CONCRETE VAULT DESIGNED IN ACCORDANCE WITH ASTM C478 AND LOADS INDICATED IN THE STRUCTURAL DRAWINGS. PROVIDE FRP GRATING AND ALUMINUM HANDRAIL. PRECAST VAULT. GUARDRAIL, AND FRP GRATING ARE DELEGATED DESIGN ITEMS.
2. INSTALL SLOPED CONCRETE FILL ON BASE SLAB AS SHOWN. FILL TO BE SLOPED TOWARD EFFLUENT PIPE WITH 1:12 PITCH.
3. PROVIDE ADDITIONAL REINFORCING AROUND TOP SLAB OPENING.
4. LAGOON 4 EFFLUENT BOX IS SHOWN. LAGOON 3 EFFLUENT STRUCTURE SHALL BE A MIRROR OF THE PLAN OF LAGOON 4 EFFLUENT STRUCTURE AS SHOWN ON M04.01.

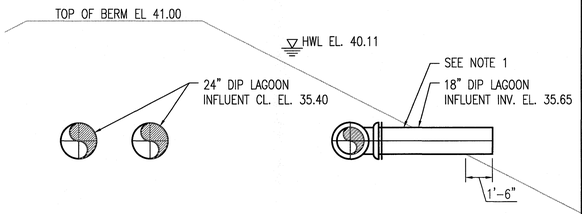

C M04.03 LAGOON INFLUENT PIPING SECTION
SCALE: 1/4"=1'-0"
REF: M04.03

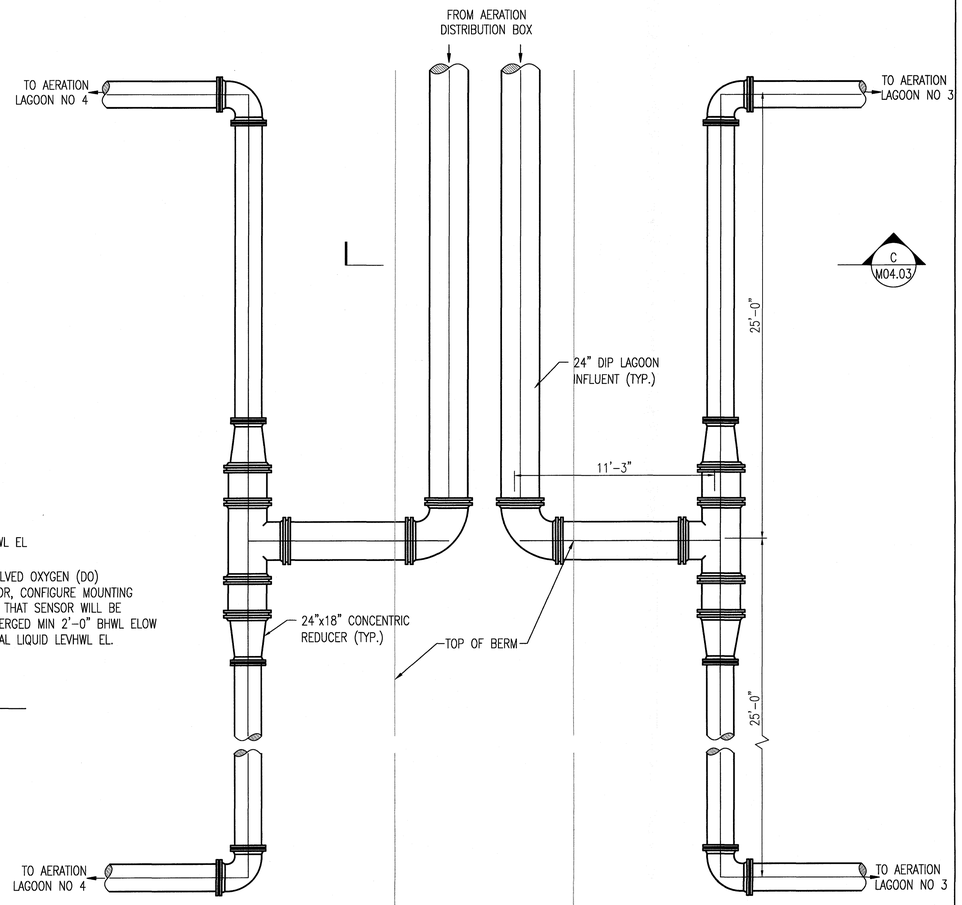

4 M04.03 LAGOON INFLUENT PIPING PLAN
SCALE: 1/4"=1'-0"
REF: M04.01

REVISIONS

CLIENT INFORMATION

SUSSEX COUNTY, DE
ENGINEERING DEPARTMENT

INLAND BAYS RWF PHASE #2 EXPANSION: CONTRACT S19-10

KEY PLAN

GRAPHIC SCALES

0 2' 4' 8'
SCALE: 1/4" = 1'-0"

0 1' 2' 3' 5'
SCALE: 3/8" = 1'-0"

SIGNATURE

ROBERT H. MALEAN LICENSE No. 21388 PROFESSIONAL ENGINEER DELAWARE
12/10/18

WRA
Whitman, Requardt & Associates, LLP
801 South Caroline Street, Baltimore, Maryland 21231

AERATION LAGOONS 3 & 4 PARTIAL PLANS AND SECTIONS

DRAWING NO.

M04.03

SCALE: AS SHOWN		
DATE: DEC. 2018		SHEET 116 OF 217
DES: MH	DRAWN: MH	CHECK: RHM

P:\Projects\Sussex County\Inland Bays RWF Phase #2 Expansion\Design\Drawings\Aeration\M04.03 - 03.dwg

GENERAL SHEET NOTES

1. SEE M00.01 FOR GENERAL NOTES, ABBREVIATIONS AND LEGEND.

[X] SPECIFIC NOTES:

1. POLYETHYLENE PIPE TO BE SHIPPED IN STD. 40' LENGTHS. INSTALLATION CONTRACTOR TO DRILL 1 1/4" ø HOLES FOR DOWNCOMER ASS'Y. AND FUSION WELD PIPE AND FITTINGS FOR REQUIRED LENGTHS IN FIELD.
2. WIRE ROPE CUT LENGTH EQUALS HORIZONTAL DISTANCE FROM ANCHOR POST TO END OF PE PIPE MINUS 2'-0".

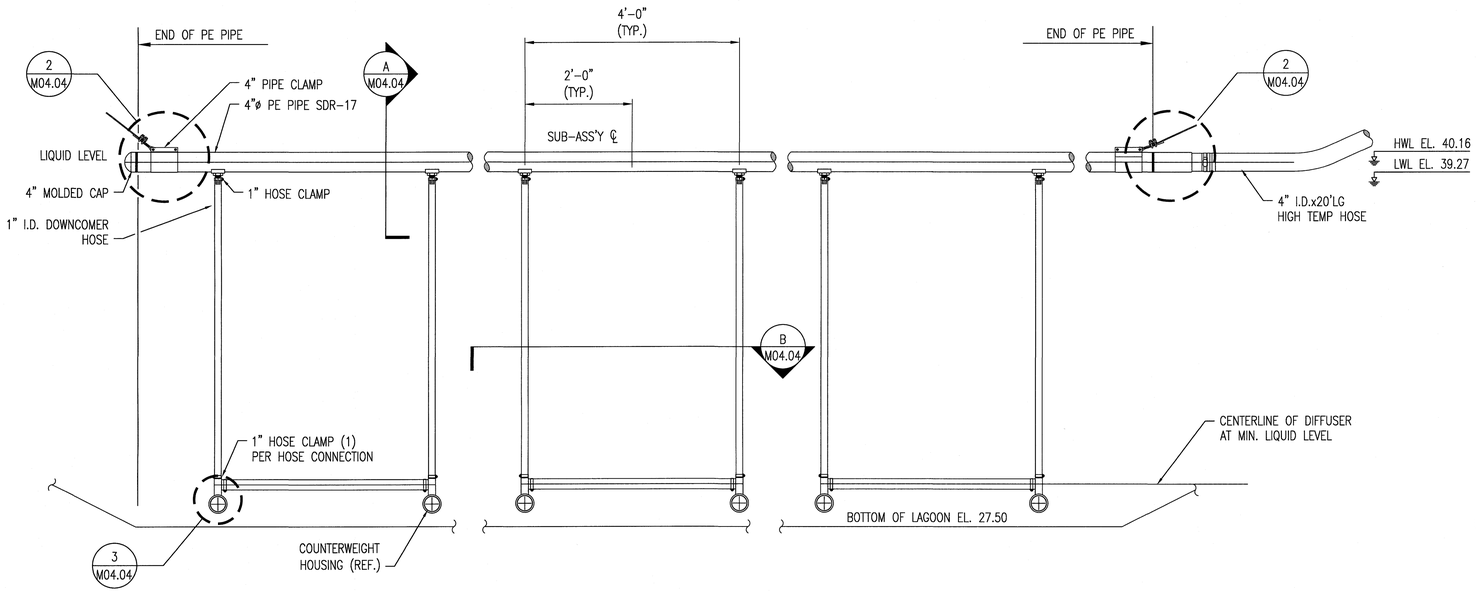

1 M04.04 **AERATION CHAIN ASSEMBLY** SCALE: NONE

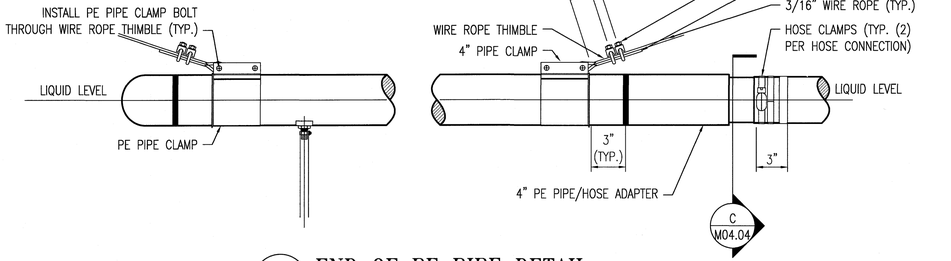

2 M04.04 **END OF PE PIPE DETAIL** SCALE: NONE

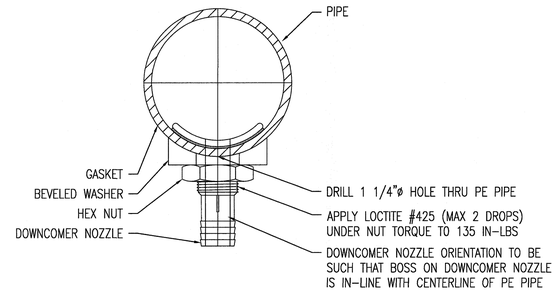

A M04.04 **DIFFUSER ASSEMBLY SECTION** SCALE: NONE

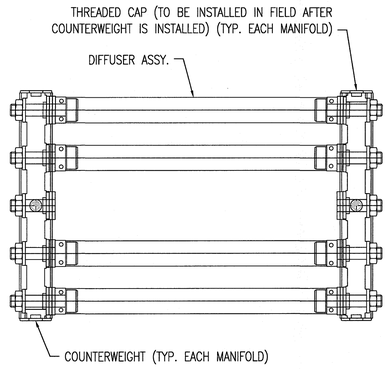

B M04.04 **DIFFUSER ASSEMBLY SECTION** SCALE: NONE

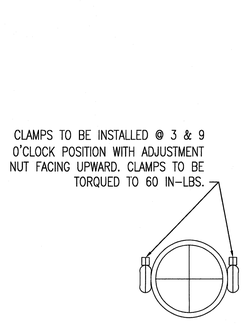

C M04.04 **SECTION** SCALE: NONE

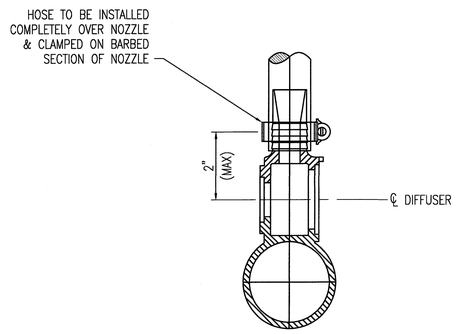

3 M04.04 **COUNTERWEIGHT CONNECTION DETAIL** SCALE: NONE

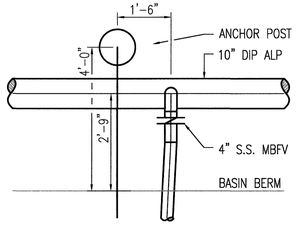

4 M04.04 **ENLARGED DETAIL** SCALE: 1/2"=1'-0"

REVISIONS		

CLIENT INFORMATION

SUSSEX COUNTY, DE
ENGINEERING
DEPARTMENT

INLAND BAYS RWF
PHASE #2 EXPANSION:
CONTRACT S19-10

KEY PLAN

GRAPHIC SCALES

0 2' 4' 8'
SCALE: 1/4" = 1'-0"

SIGNATURE

ROBERT H. MCLEIN LICENSE No. 21386 DELAWARE PROFESSIONAL ENGINEER
12/10/18

Whitman, Requardt & Associates, LLP
801 South Caroline Street, Baltimore, Maryland 21231

AERATION LAGOONS 3 & 4 DETAILS

DRAWING NO.

M04.04

SCALE: AS SHOWN		
DATE: DEC. 2018		SHEET 117 OF 217
DES: MH	DRAWN: MH	CHECK: RHM

G:\Projects\Sussex County\Inland Bays RWF Phase #2 Expansion\Design\Plan Sheets\M04.04 Aeration Chain Assembly Details.dwg

GENERAL SHEET NOTES

1. SEE M00.01 FOR GENERAL NOTES, ABBREVIATIONS, AND LEGEND.

[X] SPECIFIC NOTES:

1. CUT AND ABANDON EX. 12" RAS PIPE 10' FROM STRUCTURE. CAP AND SEAL PIPE OPENING. FILL THE INDICATIVE HATCH PORTION W/ CONCRETE.

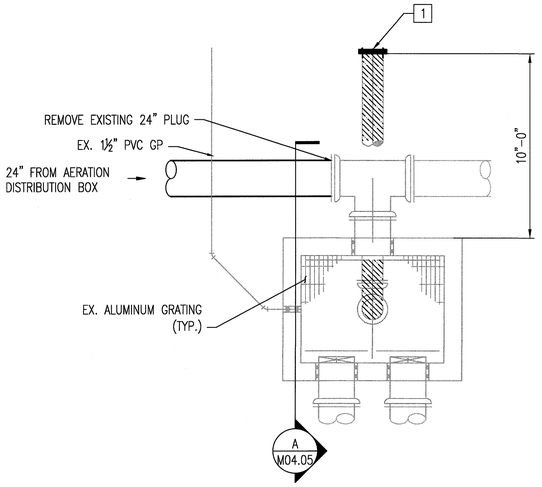

EXISTING LAGOON INFLUENT DISTRIBUTION BOX PLAN

1 / M04.05 SCALE: 1/4"=1'-0"

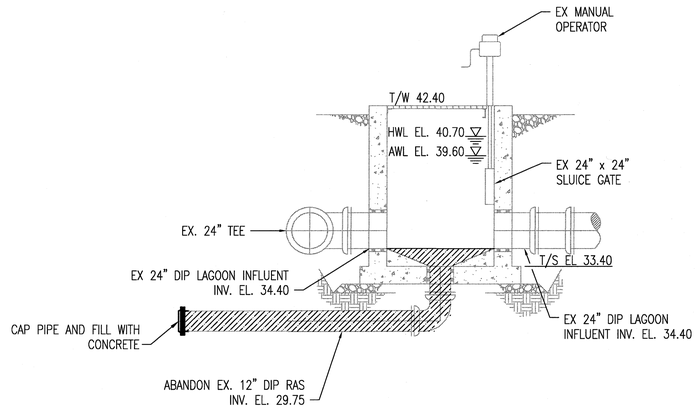

EXISTING LAGOON INFLUENT DISTRIBUTION BOX SECTION

A / M04.05 SCALE: 1/4"=1'-0"

REVISIONS

CLIENT INFORMATION

SUSSEX COUNTY, DE ENGINEERING DEPARTMENT

INLAND BAYS RWF PHASE #2 EXPANSION: CONTRACT S19-10

KEY PLAN

GRAPHIC SCALES

0 2' 4' 8'

SCALE: 1/4" = 1'-0"

SIGNATURE

ROBERT H MELVIN LICENSE No. 21386 DELAWARE PROFESSIONAL ENGINEER

12/10/18

Whitman, Requardt & Associates, LLP
801 South Caroline Street, Baltimore, Maryland 21231

EXISTING AERATION DISTRIBUTION STRUCTURE TO LAGOON 1 & 2 MODIFICATIONS

DRAWING NO.

M04.05

SCALE: AS SHOWN		
DATE: DEC. 2018	**SHEET 118 OF 217**	
DES: MH	**DRAWN: MH**	**CHECK: RHM**

File Name: h:\projects\sussex\engineering\inlandbays\phase2\contract_s19-10\plan\plan_27x36\14256003M04-05.dwg

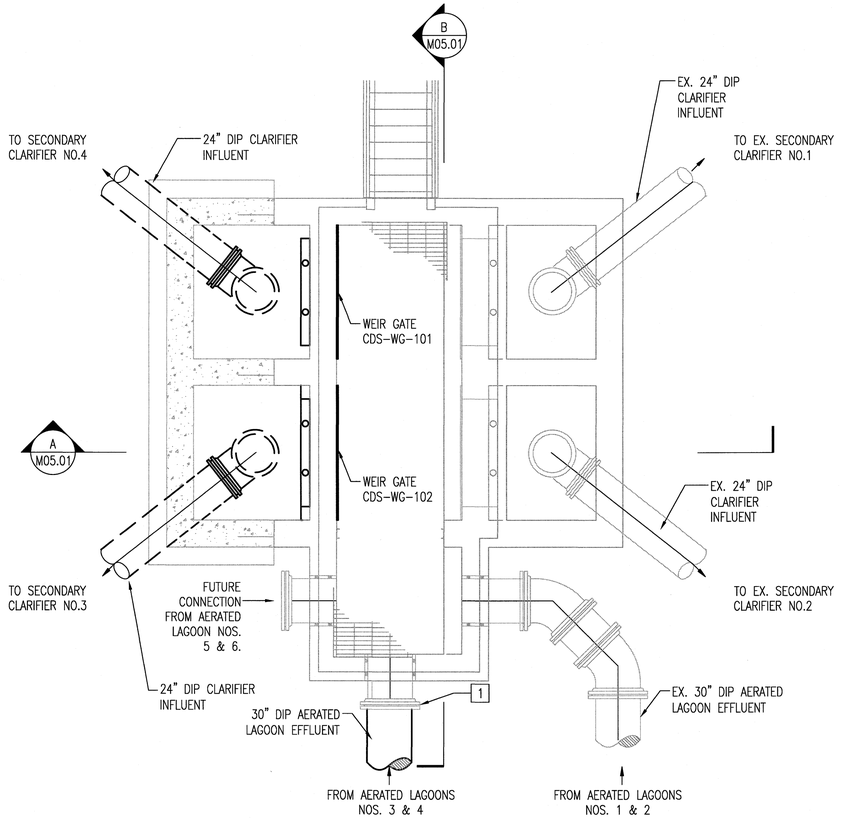

1 M05.01 CLARIFIER DISTRIBUTION BOX
SCALE: 1/4"=1'-0"

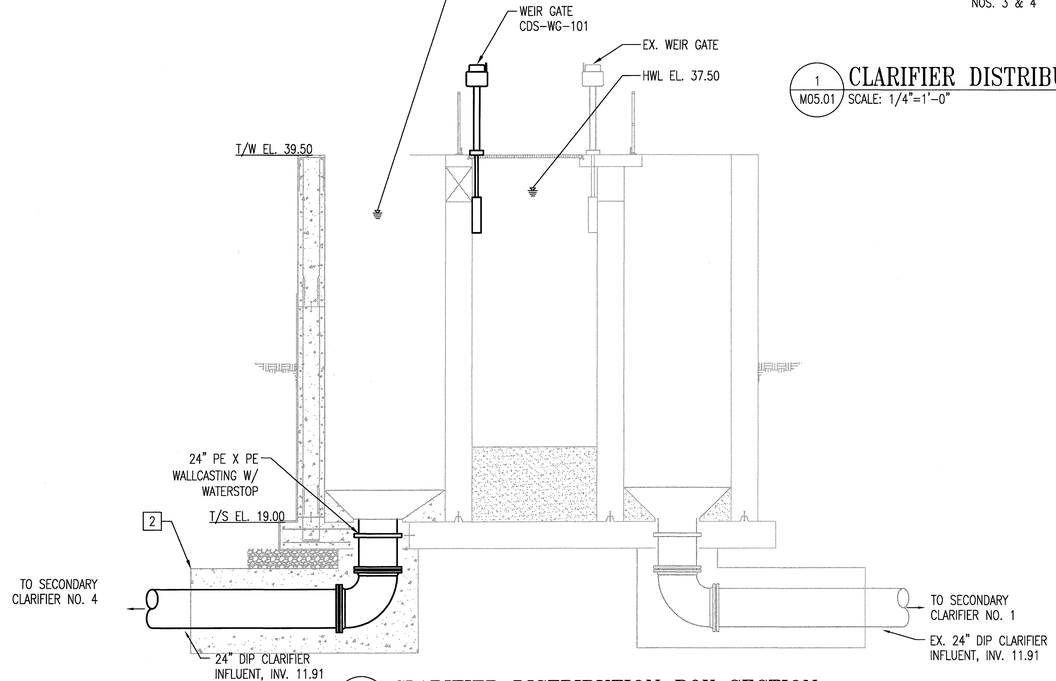

A M05.01 CLARIFIER DISTRIBUTION BOX SECTION
SCALE: 1/4"=1'-0"

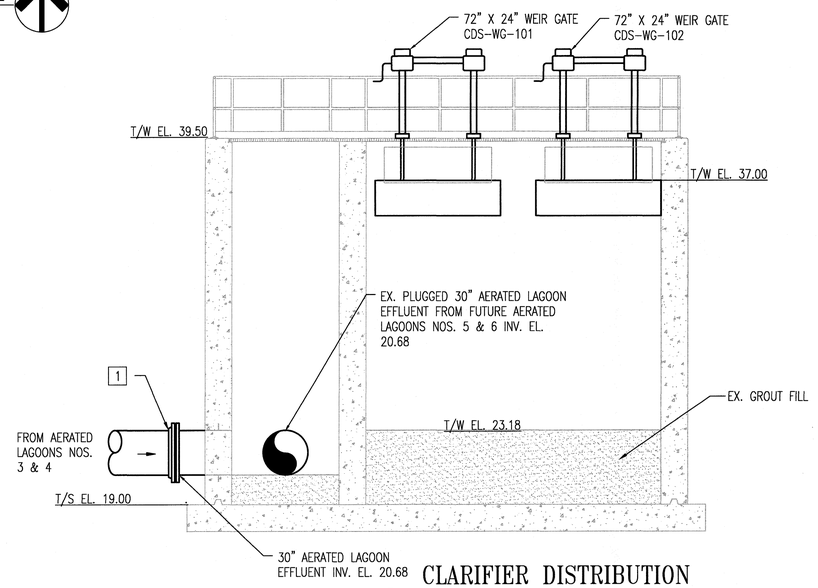

B M05.01 CLARIFIER DISTRIBUTION BOX SECTION
SCALE: 1/4"=1'-0"

GENERAL SHEET NOTES

1. SEE M00.01 FOR GENERAL NOTES, ABBREVIATIONS, AND LEGEND.

[X] SPECIFIC NOTES

1. REMOVE EXISTING MJ PLUG.
2. ALL PIPING UNDER SLAB SHALL BE CONCRETE ENCASED.

REVISIONS

CLIENT INFORMATION

SUSSEX COUNTY, DE
ENGINEERING
DEPARTMENT

INLAND BAYS RWF
PHASE #2 EXPANSION:
CONTRACT S19-10

KEY PLAN

GRAPHIC SCALES

0 2' 4' 8'
SCALE: 1/4" = 1'-0"

SIGNATURE

ROBERT H MOTHERSHEAD
LICENSE
No. 21386
DELAWARE
PROFESSIONAL ENGINEER
12/10/18

WRA
Whitman, Requardt & Associates, LLP
801 South Caroline Street, Baltimore, Maryland 21231

CLARIFIER DISTRIBUTION BOX PLAN AND SECTIONS

DRAWING NO.

M05.01

SCALE: AS SHOWN		
DATE: DEC. 2018	SHEET 119 OF 217	
DES: MH	DRAWN: MH	CHECK: RHM

G:\Projects\Sussex Co\Sussex Co Inland Bays RWF Phase 2 Expansion\Design\Drawings\M05.01_CLARIFIER DISTRIBUTION BOX PLAN AND SECTIONS.dwg

GENERAL SHEET NOTES

1. SEE M00.01 FOR GENERAL NOTES, ABBREVIATIONS, AND LEGEND.

[X] SPECIFIC NOTES:

1. REMOVABLE GUARDRAIL SECTION LOCATED ON BOTH SIDES OF WALKWAY AT LAUNDER.
2. ALUMINUM LADDER ON EAST SIDE OF WALKWAY. ALUMINUM LADDER TO COMPLY WITH DIMENSIONAL, LOADING AND OTHER REQUIREMENTS OF OSHA 1910.27. PROVIDE MEANS TO RAISE AND LOWER LADDER SAFELY FROM CATWALK.
3. PROVIDE 4 SPRAY NOZZLES ALONG WALKWAY EVENLY SPACED BETWEEN THE WEIR WALL AND FEED WELL. PROVIDE 4 NOZZLES WITH THE FEED WELL AS SHOWN.
4. HEAT TRACE AND INSULATE ALL PIPING ABOVE GRADE OR LESS THAN 30" BELOW GRADE UTILITY WATER AND SUMP PUMP DISCHARGE PIPING IN ACCORDANCE WITH SPECIFICATION SECTION 15080.

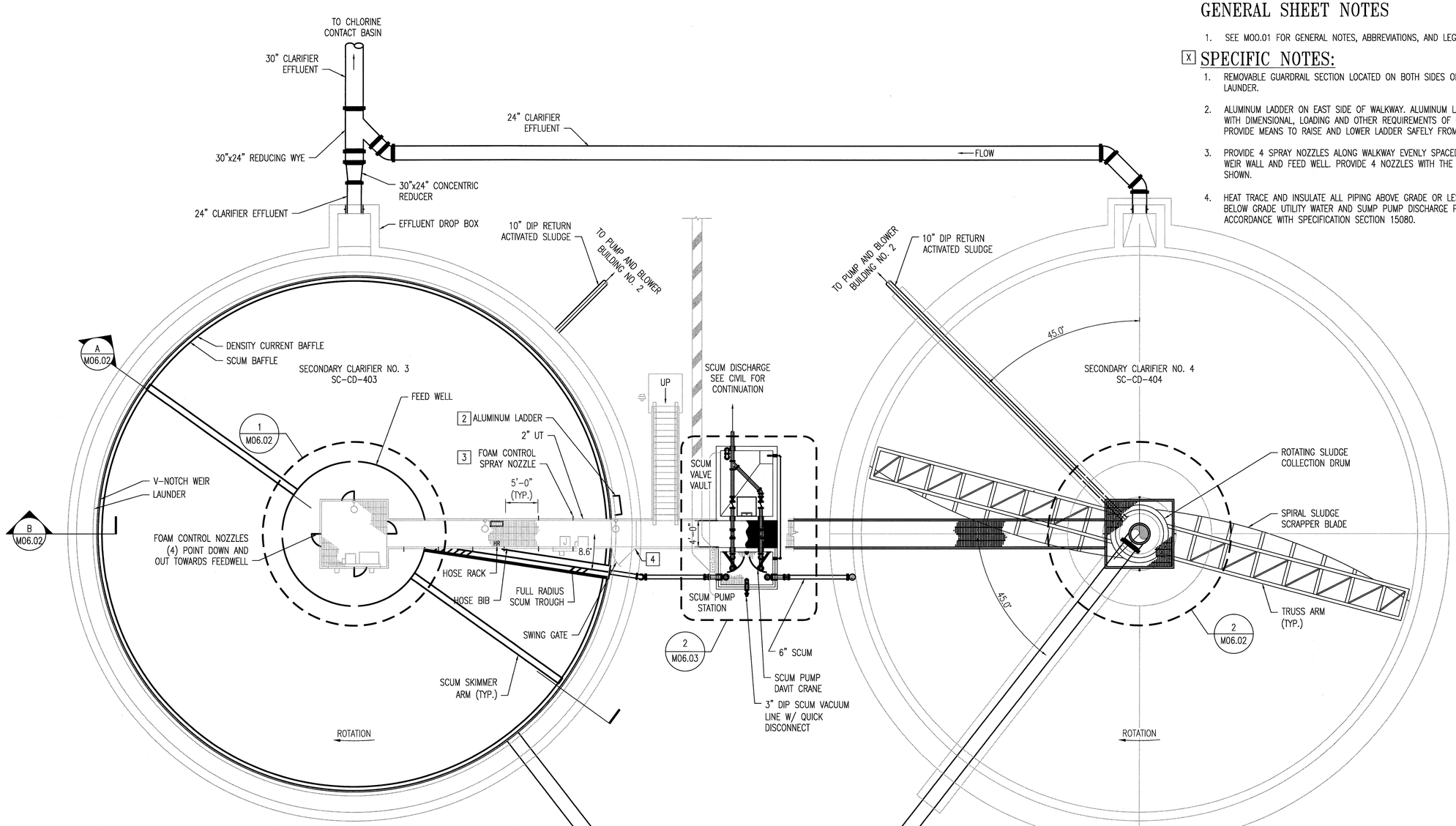

1 M06.01 SECONDARY CLARIFIERS PARTIAL UPPER PLAN
SCALE: 1/8"=1'-0"

2 M06.01 SECONDARY CLARIFIERS PARTIAL LOWER PLAN
SCALE: 1/8"=1'-0"

4" UT

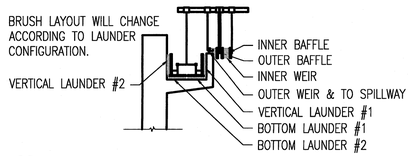

A M06.01 BRUSH CLEANING SYSTEM
NOT TO SCALE

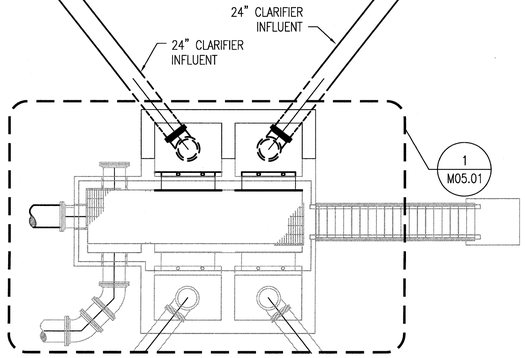

P:\Flowmet Workspace\Contract Documents\Plan Sheets\Secondary Clarifiers\Plan Sheets_S19A\1425803M06-01.dwg

REVISIONS		

CLIENT INFORMATION

SUSSEX COUNTY, DE
ENGINEERING
DEPARTMENT

INLAND BAYS RWF
PHASE #2 EXPANSION:
CONTRACT S19-10

KEY PLAN

GRAPHIC SCALES

0 4' 8' 16'
SCALE: 1/8" = 1'-0"

SIGNATURE

ROBERT H. McLEAN LICENSE No. 21386 DELAWARE PROFESSIONAL ENGINEER
12/10/18

Whitman, Requardt & Associates, LLP
801 South Caroline Street, Baltimore, Maryland 21231

CLARIFIERS-
UPPER AND LOWER PLANS

DRAWING NO.

M06.01

SCALE: AS SHOWN		
DATE: DEC. 2018		SHEET 120 OF 217
DES: MH	DRAWN: MH	CHECK: RHM

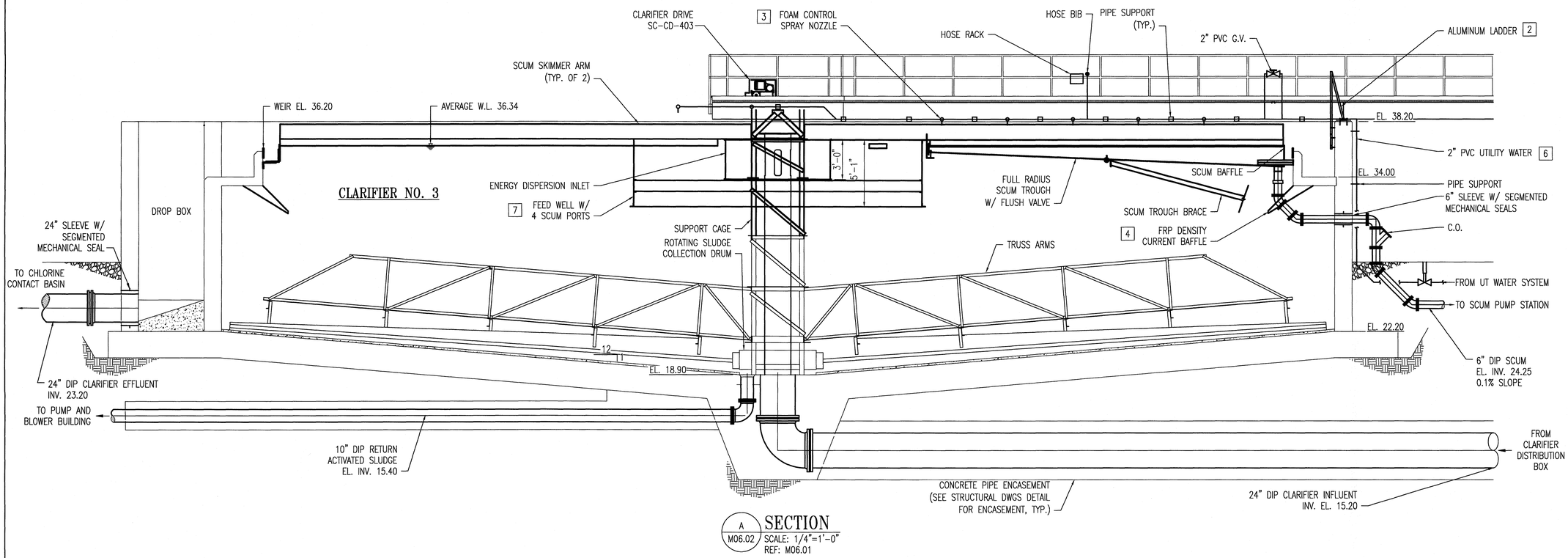

A / M06.02 SECTION
SCALE: 1/4"=1'-0"
REF: M06.01

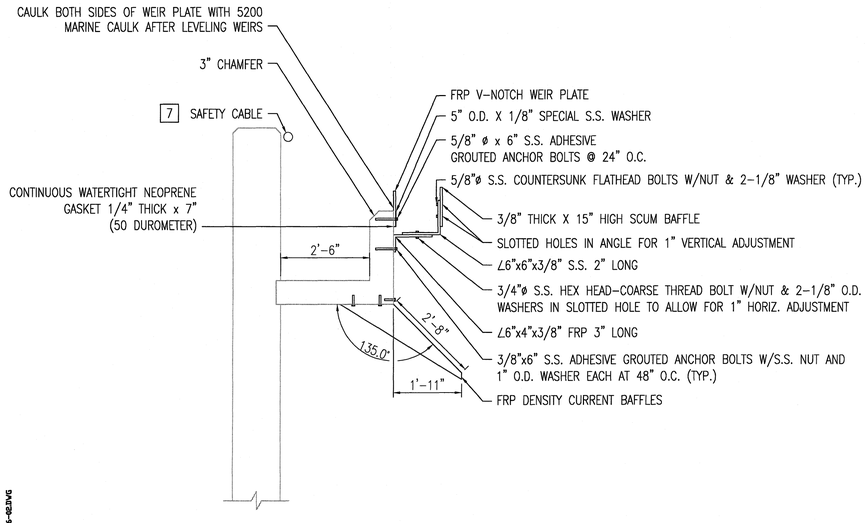

B / M06.02 SECTION
SCALE: 1/2"=1'-0"
REF: M06.01

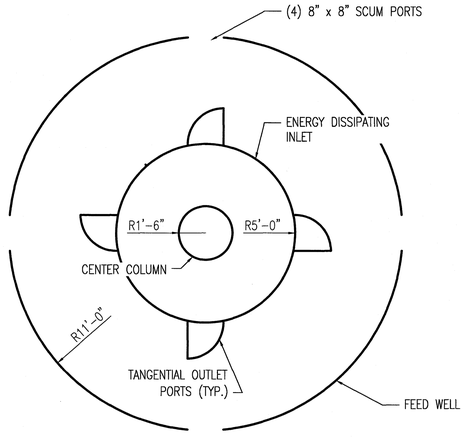

1 / M06.02 FEED WELL DETAIL
SCALE: 1/4"=1'-0"
REF: M06.01

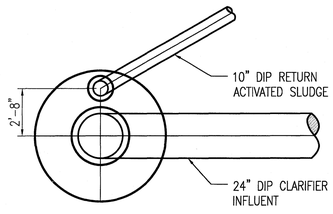

2 / M06.02 SLUDGE COLLECTION DRUM DETAIL
SCALE: 1/4"=1'-0"
REF: M06.01

GENERAL SHEET NOTES

1. SEE M00.01 FOR GENERAL NOTES, ABBREVIATIONS, AND LEGEND.

X SPECIFIC NOTES:

1. SWING GATE LOCATED ON SIDE OF WALKWAY AT LAUNDERER. REFER TO DETAIL ON DWG. A05.05.
2. ALUMINUM LADDER TO COMPLY WITH DIMENSIONAL, LOADING, AND OTHER REQUIREMENTS OF OSHA 1910.27. PROVIDE MEANS TO RAISE AND LOWER LADDER SAFELY FROM CATWALK.
3. PROVIDE 4 SPRAY NOZZLES ALONG WALKWAY EVENLY SPACED BETWEEN THE WEIR WALL AND FEED WELL. PROVIDE 4 NOZZLES WITHIN THE FEED WELL AS SHOWN.
4. FIELD CUT DENSITY CURRENT BAFFLE AS NECESSARY TO FIT AROUND SCUM TROUGH BRACE WITH A MAXIMUM CLEARANCE OF 1". PROVIDE NEOPRENE GASKET TO FIT SNUG AROUND BRACE REPLACING FULL EXTENT OF MISSING BAFFLE SECTION.
5. SOME OBJECTS IN SECTION SHOWN OUT OF POSITION FOR CLARITY. SEE PLAN VIEW FOR TRUE ORIENTATION.
6. LOCATE TOP OF FEED WELL AT 6 INCHES ABOVE AVERAGE WATER LEVEL.
7. PROVIDE SAFETY CABLE 3" BELOW T/W SPECIFIED IN SECTION 05500.

REVISIONS

CLIENT INFORMATION

SUSSEX COUNTY, DE
ENGINEERING
DEPARTMENT

INLAND BAYS RWF
PHASE #2 EXPANSION:
CONTRACT S19-10

KEY PLAN

GRAPHIC SCALES

0 1' 2' 4'
SCALE: 1/2" = 1'-0"

0 2' 4' 8'
SCALE: 1/4" = 1'-0"

SIGNATURE

ROBERT H MILEAM LICENSE No. 21388 DELAWARE PROFESSIONAL ENGINEER
12/10/18

WRA
Whitman, Requardt & Associates, LLP
801 South Caroline Street, Baltimore, Maryland 21231

CLARIFIERS - SECTIONS

DRAWING NO.

M06.02

SCALE: AS SHOWN		
DATE: DEC. 2018		SHEET 121 OF 217
DES: RHM	DRAWN: MH	CHECK: DCC

C:\Users\mhermandez\ppdata\local\temp\AcPublish_6944\145868288006-002.dwg

FILENAME: W:\1425c-ds\CADD\145868288006-002.DWG

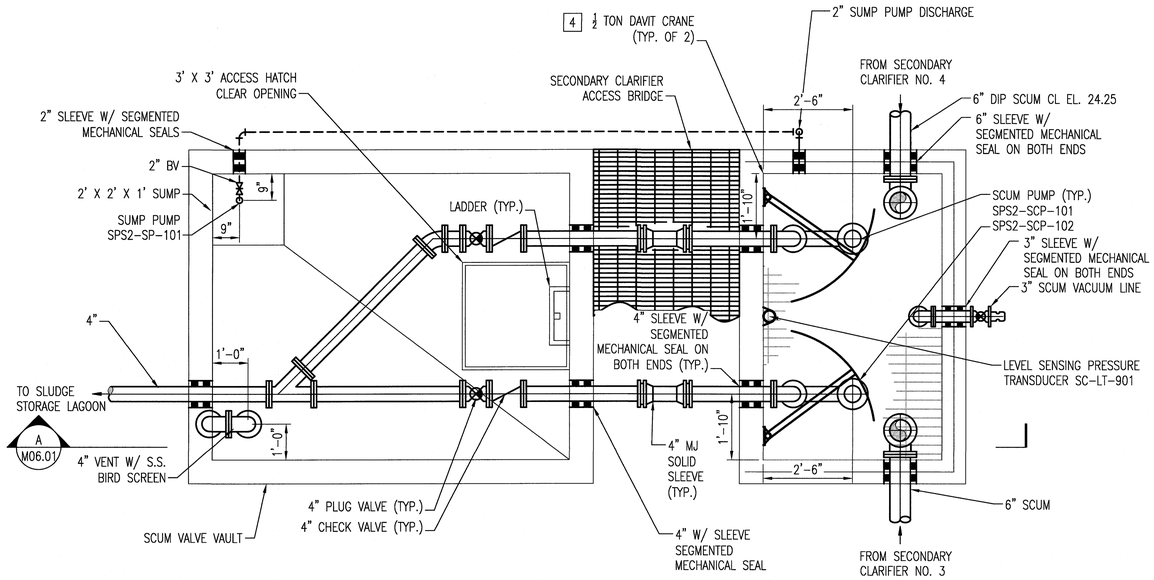

1 M06.01 PLAN
SCALE: 1/2"=1'-0"

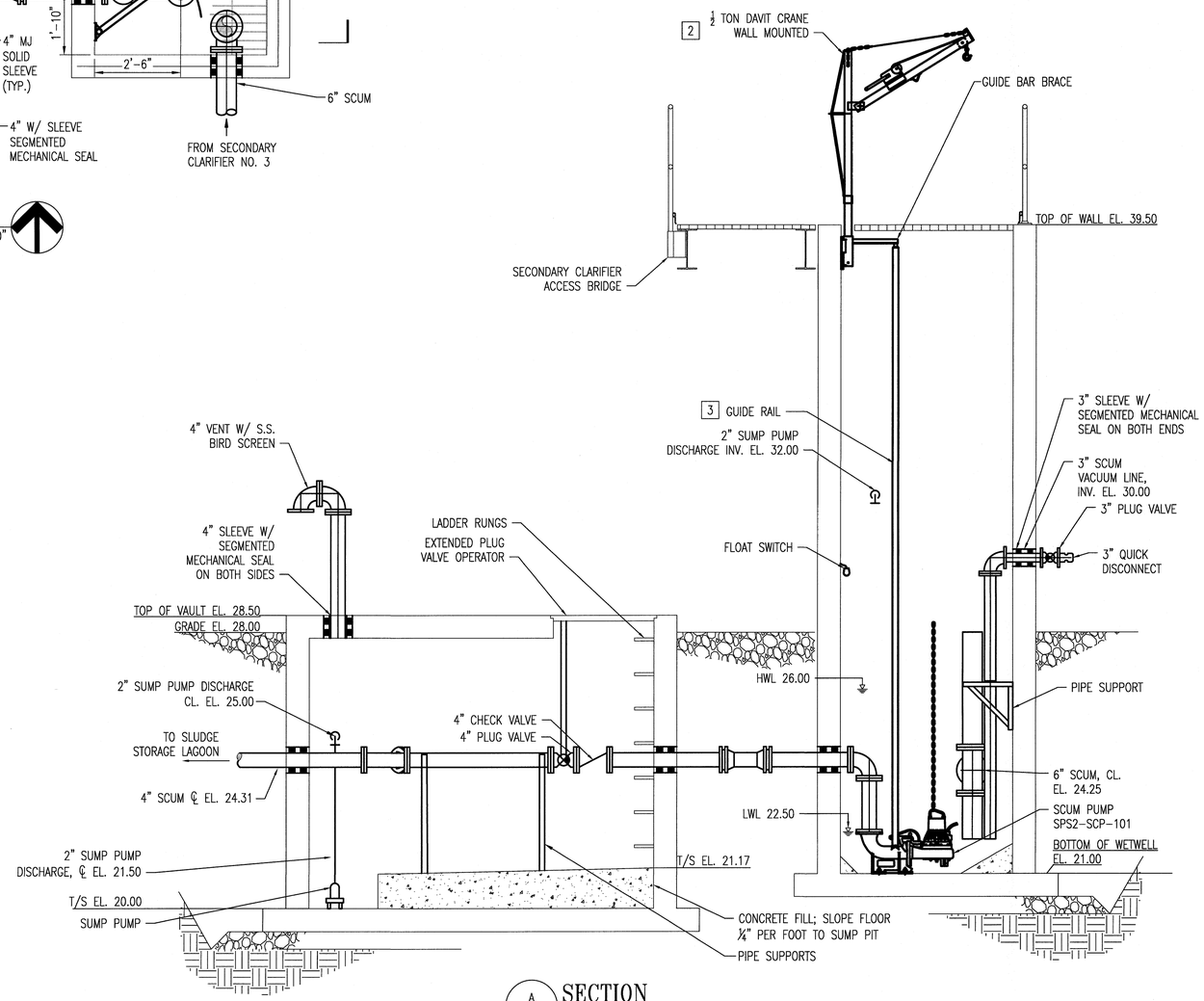

A M06.01 SECTION
SCALE: 1/2"=1'-0"

GENERAL SHEET NOTES

1. SEE M00.01 FOR GENERAL NOTES, ABBREVIATIONS, AND LEGEND.

X SPECIFIC NOTES

1. DAVIT CRANE BASES SHALL BE SIDE MOUNTED AT TOP OF WALL OF THE SCUM PUMP STATION. CUT HOLE THRU GRATING.
2. CONTRACTOR SHALL COORDINATE DAVIT CRANE LOCATION WITH PUMP MANUFACTURER. BOOM SHALL BE CAPABLE OF LOWERING PUMP TO GRADE AT NORTH OR SOUTH SIDE OF SCUM PUMP STATION.
3. PUMP MANUFACTURER SHALL FURNISH GUIDE BAR BRACKETS, CONTRACTOR SHALL SUPPLY NECESSARY STAND-OFFS FOR MOUNTING TO THE INSIDE WALL OF THE SCUM PUMP STATION.
4. SCUM WET WELL DAVIT CRANE SHALL HAVE A MINIMUM BOOM RADIUS OF 36 INCHES.
5. ALL EXPOSED PROCESS/UTILITY WATER PIPING ABOVE GRADE SHALL BE HEAT TRACED.

REVISIONS

CLIENT INFORMATION

SUSSEX COUNTY, DE
ENGINEERING DEPARTMENT

INLAND BAYS RWF
PHASE #2 EXPANSION:
CONTRACT S19-10

KEY PLAN

GRAPHIC SCALES

0 1' 2' 4'
SCALE: 1/2" = 1'-0"

SIGNATURE

ROBERT H McLEAN LICENSE No. 21386 DELAWARE PROFESSIONAL ENGINEER
12/10/18

WRA
Whitman, Requardt & Associates, LLP
801 South Caroline Street, Baltimore, Maryland 21231

CLARIFIERS - SCUM PUMP STATION
PLAN & SECTION

DRAWING NO.
M06.03

SCALE: AS SHOWN		
DATE: DEC. 2018	SHEET 122 OF 217	
DES: LAQ	DRAWN: MH	CHECK: RMH

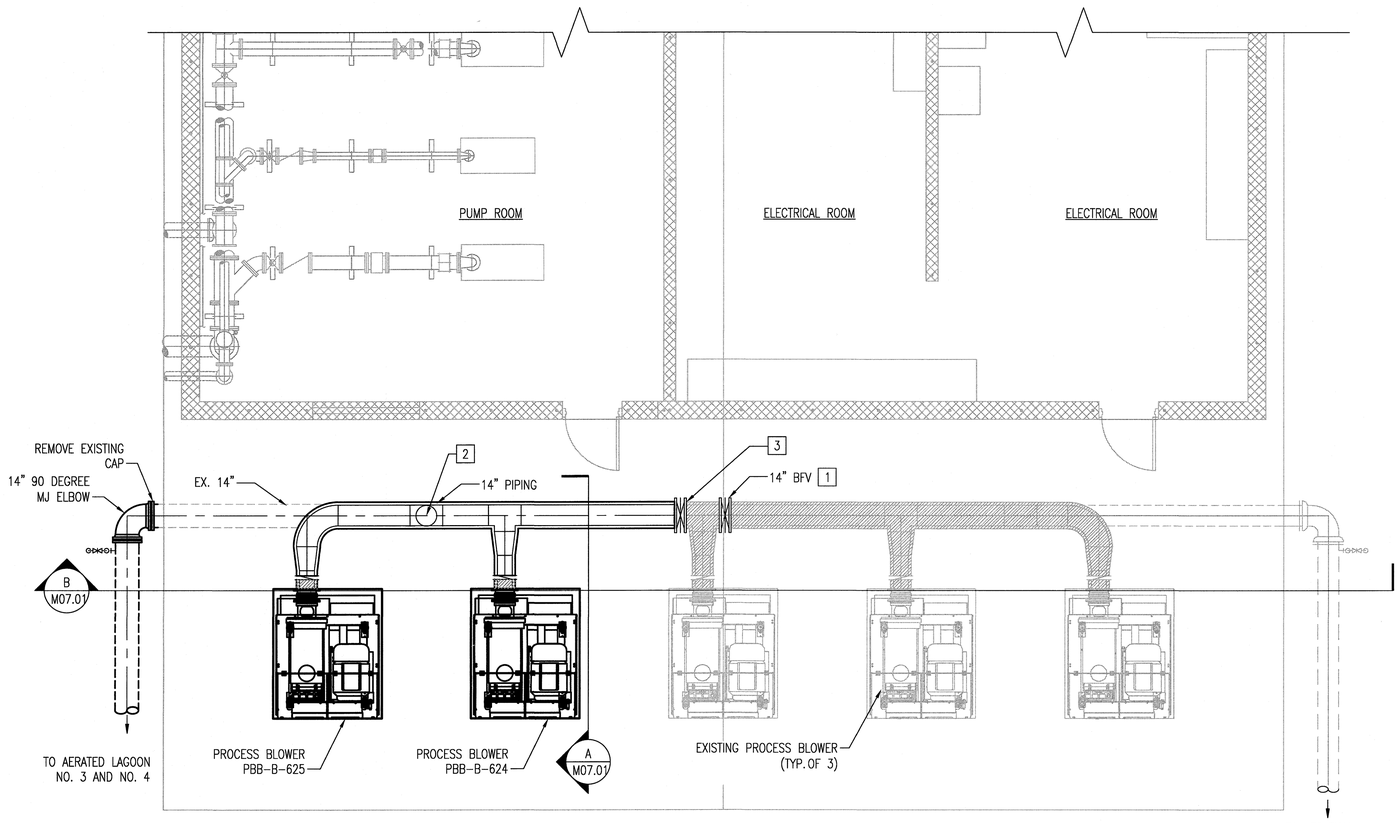

1 M07.01 PLAN
SCALE: 1/4" = 1'-0"

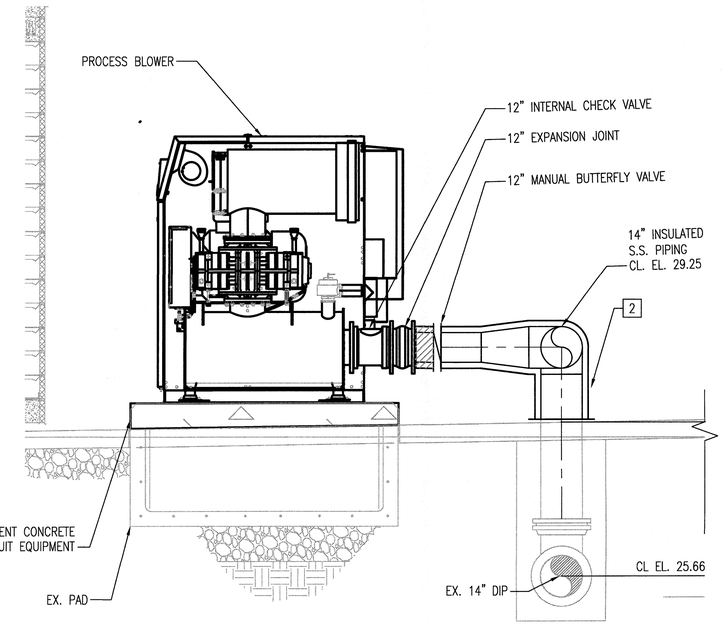

A M07.01 PARTIAL SECTION
SCALE: 1/2" = 1'-0"
REF: M07.01

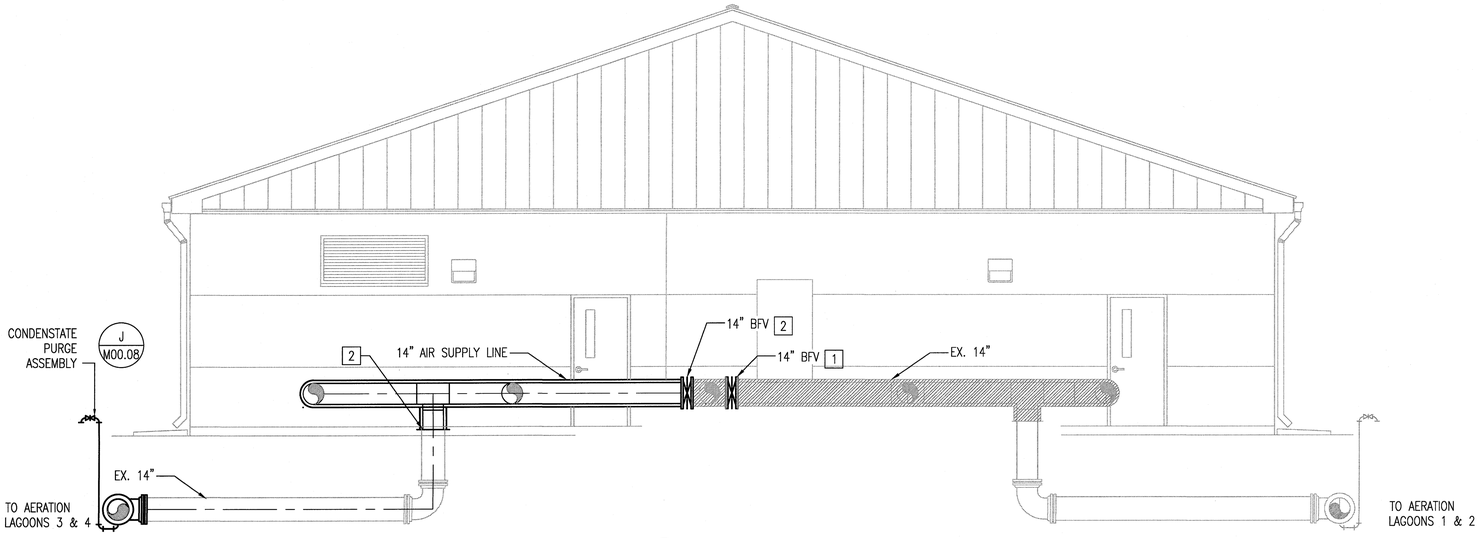

B M07.01 SECTION
SCALE: 1/2" = 1'-0"

GENERAL SHEET NOTES

1. SEE M00.01 FOR GENERAL NOTES, ABBREVIATIONS, AND LEGEND.

[X] SPECIFIC NOTES

1. REPLACE EXISTING AIR PIPING WITH 14" BUTTERFLY VALVE AND PROVIDE FITTINGS AND SUPPORTS AS NECESSARY. REPLACE ANY INSULATION REMOVED DURING THE VALVE INSTALLATION.
2. REMOVE EXISTING END CAP AND WELD PIPE TO EXISTING PIPING.
3. REMOVE END CAP ON TEE AND WELD FLANGE TO CONNECT BFV.

REVISIONS

CLIENT INFORMATION

SUSSEX COUNTY, DE
ENGINEERING
DEPARTMENT

INLAND BAYS RWF
PHASE #2 EXPANSION:
CONTRACT S19-10

KEY PLAN

GRAPHIC SCALES

0 2' 4' 8'
SCALE: 1/4" = 1'-0"

0 1' 2' 4'
SCALE: 1/2" = 1'-0"

SIGNATURE

ROBERT H. McKEAN LICENSE No. 21386 DELAWARE PROFESSIONAL ENGINEER
12/10/18

Whitman, Requardt & Associates, LLP
801 South Caroline Street, Baltimore, Maryland 21231

PUMP AND BLOWER BUILDING NO. 1 – PLAN AND PARTIAL SECTION

DRAWING NO.

M07.01

SCALE: AS SHOWN		
DATE: DEC. 2018	**SHEET 123 OF 217**	
DES: MH	**DRAWN: MH**	**CHECK: RHM**

P:\Projects\Sussex County\Contracts\Contracts_2014\14256028M07-01.dwg

GENERAL SHEET NOTES

1. SEE M00.01 FOR GENERAL NOTES, ABBREVIATIONS, AND LEGEND.

[X] SPECIFIC NOTES:

1. ROUTE VENT PIPE TO ENSURE AIR RELEASE VENTS TO EXTERIOR.
2. SEAL WALL PENETRATION WITH WATERPROOF SEALANT.
3. ROUTE CASSETTE LINE TO SPLASH BLOCK.

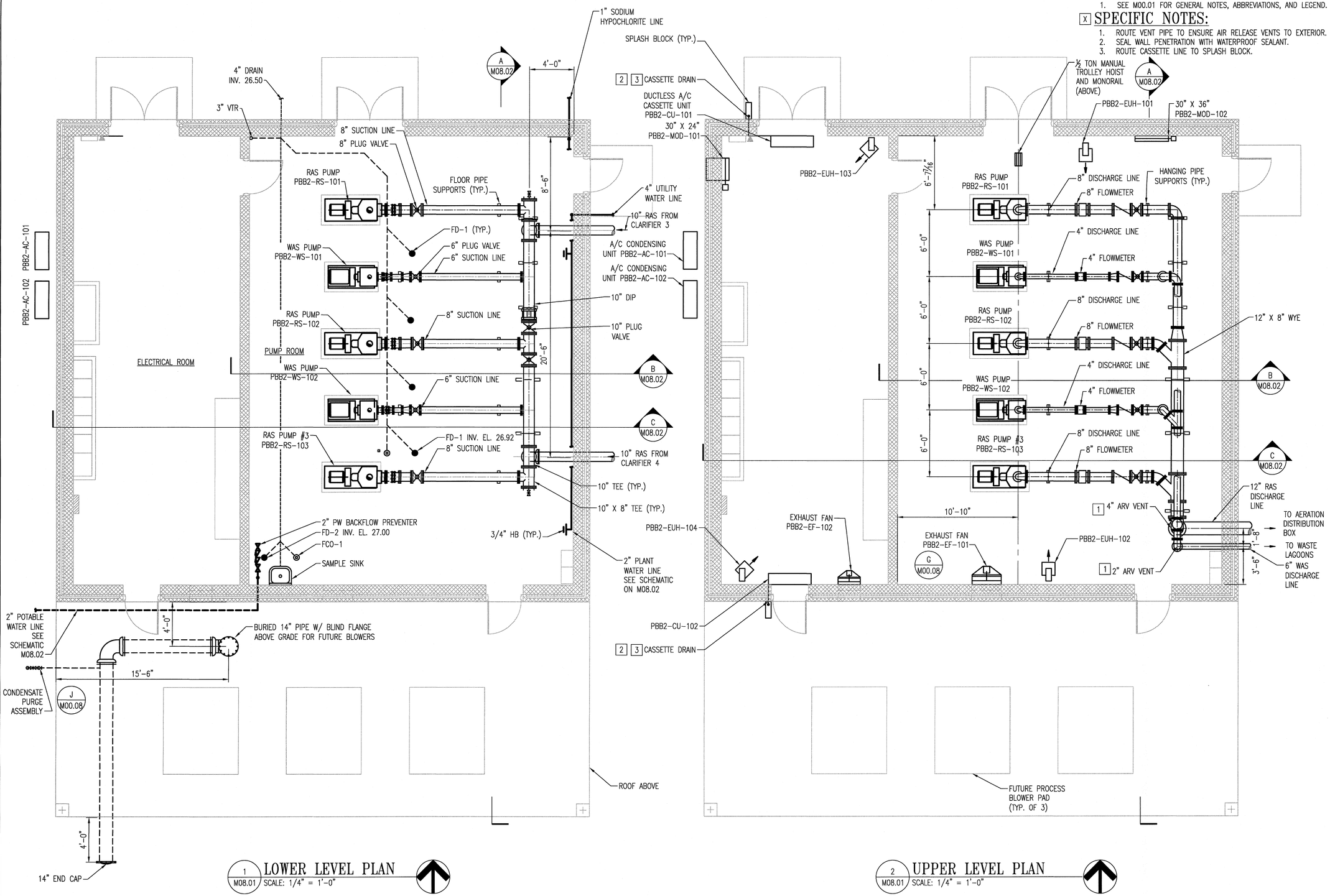

1 M08.01 LOWER LEVEL PLAN
SCALE: 1/4" = 1'-0"

2 M08.01 UPPER LEVEL PLAN
SCALE: 1/4" = 1'-0"

REVISIONS

CLIENT INFORMATION

SUSSEX COUNTY, DE
ENGINEERING
DEPARTMENT

INLAND BAYS RWF
PHASE #2 EXPANSION:
CONTRACT S19-10

KEY PLAN

GRAPHIC SCALES

0 2' 4' 8'
SCALE: 1/4" = 1'-0"

SIGNATURE

ROBERT H. McLEAN LICENSE — No. 21386 — DELAWARE PROFESSIONAL ENGINEER
12/10/18

WRA
Whitman, Requardt & Associates, LLP
801 South Caroline Street, Baltimore, Maryland 21231

PUMP AND BLOWER BUILDING NO.2 - PLAN

DRAWING NO.

M08.01

SCALE: AS SHOWN		
DATE: DEC. 2018	SHEET 124 OF 217	
DES: MH	DRAWN: MH	CHECK: RHM

P:\Projects\Sussex County\Inland Bays RWF Phase 2\Drawings\Plan Sets\Pump Building No.2\M08.01 Pump Building No.2 Plan.dwg, 12/4/2018 7:25:29 AM, Adobe PDF

GENERAL SHEET NOTES

1. SEE M00.01 FOR GENERAL NOTES, ABBREVIATIONS, AND LEGEND.

[X] SPECIFIC NOTES:

1. ALL PIPING UNDER SLAB SHALL BE CONCRETE ENCASED.
2. CONTRACTOR SHALL FIELD COORDINATE SAMPLE ROUTING AND SUPPORTS TO FOLLOW SLUDGE SAMPLE DETAIL ON M08.03.

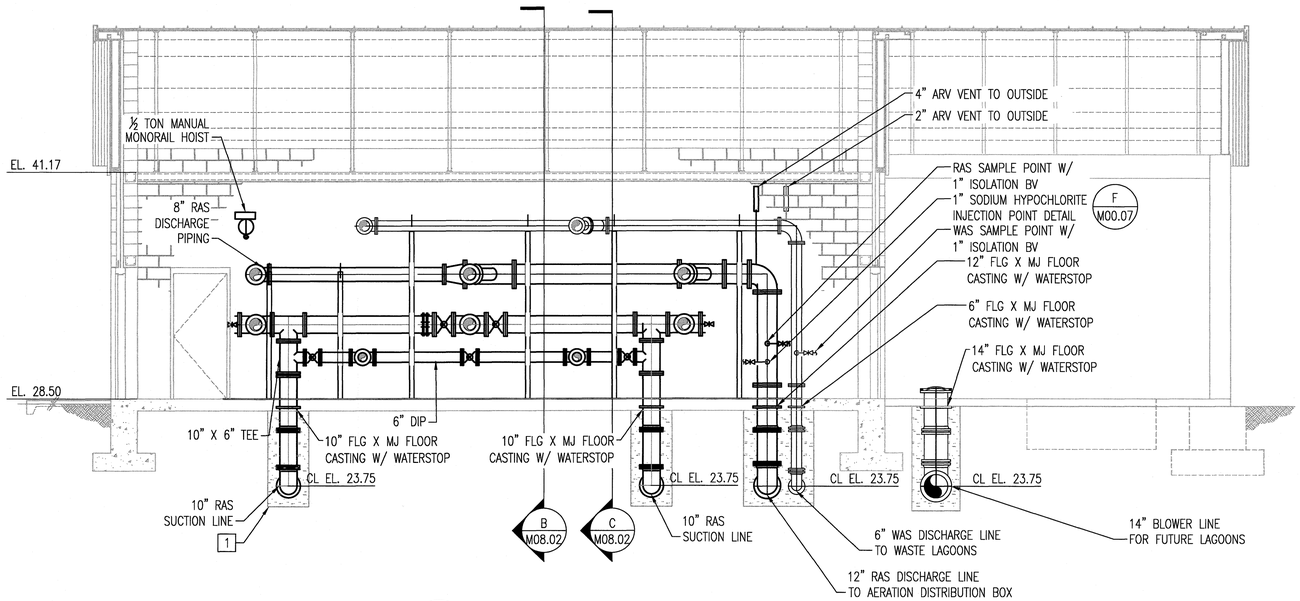

A M08.02 SECTION
SCALE: 1/4"=1'-0"

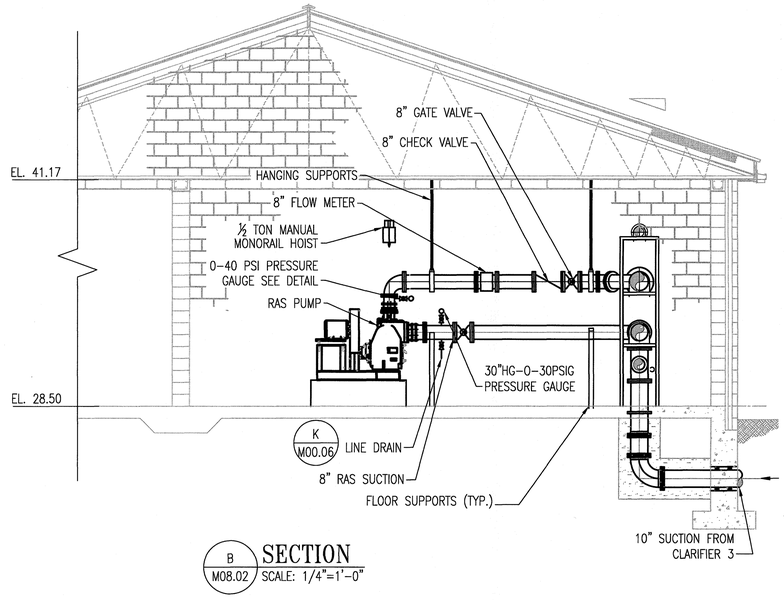

B M08.02 SECTION
SCALE: 1/4"=1'-0"

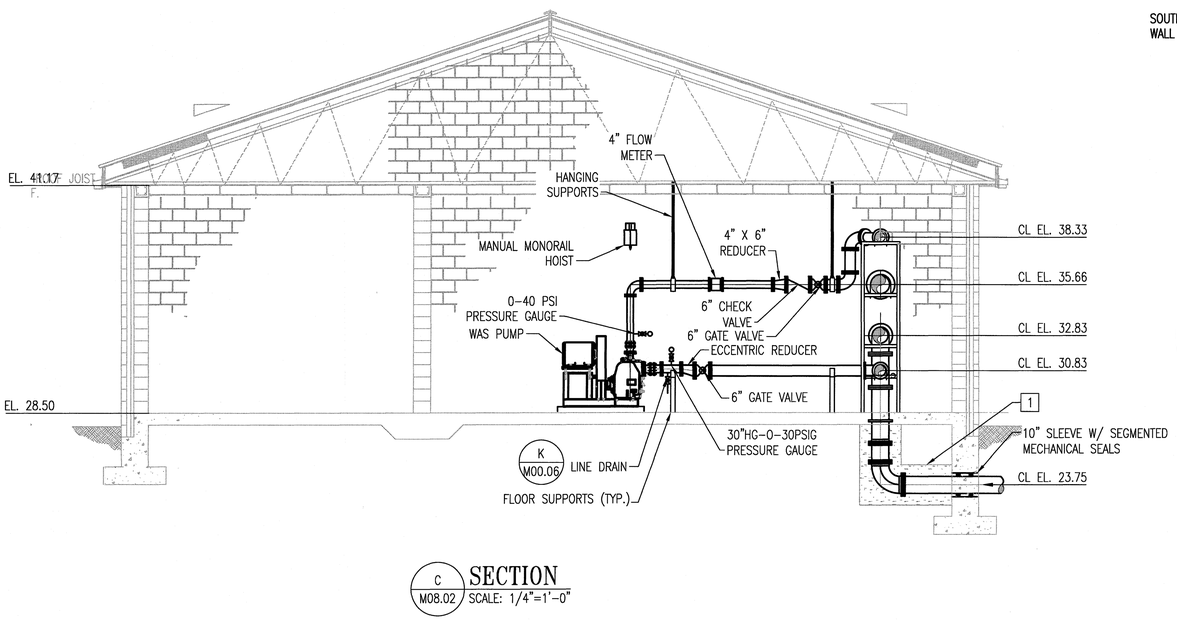

C M08.02 SECTION
SCALE: 1/4"=1'-0"

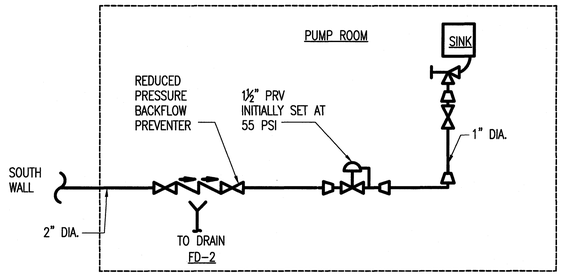

1 M08.02 PUMP AND BLOWER BUILDING NO.2 POTABLE WATER SYSTEM SCHEMATIC
SCALE: NONE

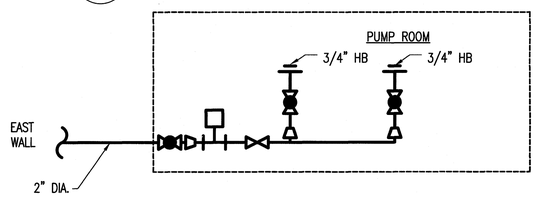

2 M08.02 PUMP AND BLOWER BUILDING NO.2 UTILITY WATER SYSTEM SCHEMATIC
SCALE: NONE

C:\Users\mhernandez\appdata\local\temp\AcPublish_8244\1425602M09-02.dwg

REVISIONS		

CLIENT INFORMATION

SUSSEX COUNTY, DE
ENGINEERING
DEPARTMENT

INLAND BAYS RWF
PHASE #2 EXPANSION:
CONTRACT S19-10

KEY PLAN

GRAPHIC SCALES

0 2' 4' 8'
SCALE: 1/4" = 1'-0"

SIGNATURE

ROBERT H McLEAN LICENSE No. 21386 DELAWARE PROFESSIONAL ENGINEER
12/10/18

Whitman, Requardt & Associates, LLP
801 South Caroline Street, Baltimore, Maryland 21231

PUMP AND BLOWER BUILDING NO. 2 - SECTIONS

DRAWING NO.

M08.02

SCALE: AS SHOWN		
DATE: DEC. 2018		SHEET 125 OF 217
DES: MH	DRAWN: MH	CHECK: RHM

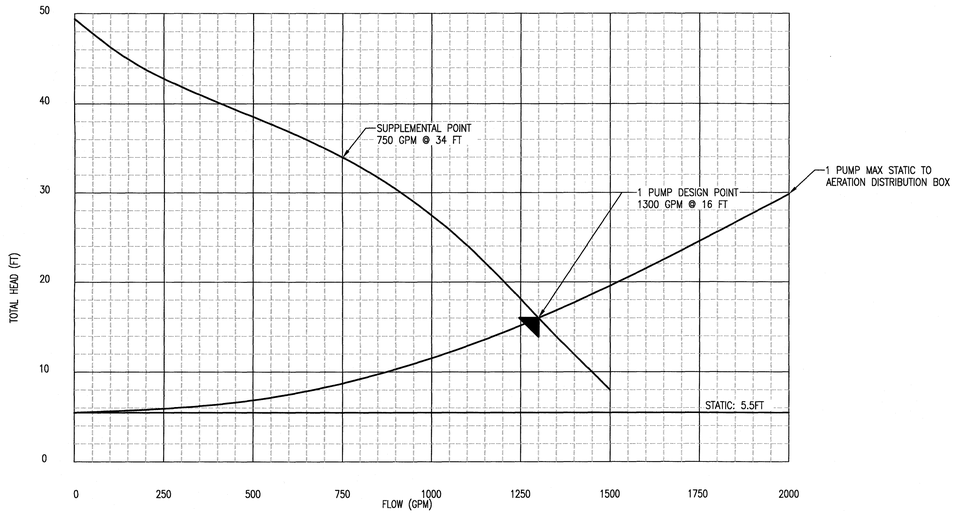

RAS PUMP CRITERIA

TOTAL NUMBER OF PUMPS	3	SUPPLEMENTARY POINT CAPACITY	750 GPM
NUMBER OF PUMPS OPERATING	1	SUPPLEMENTARY POINT TOTAL HEAD	34 FT
MOTOR NOMINAL RPM	1800 RPM	SUPPLEMENTARY POINT EFFICIENCY (MIN)	60%
HP (MAX)	15	NPSHR (MAX)	6 FT
SHUT OFF HEAD (MIN)	50 FT		
DESIGN POINT CAPACITY	1300 GPM		
DESIGN POINT TOTAL HEAD	16 FT		
DESIGN POINT EFFICIENCY (MIN)	50%		
NPSHR (MAX)	11 FT		

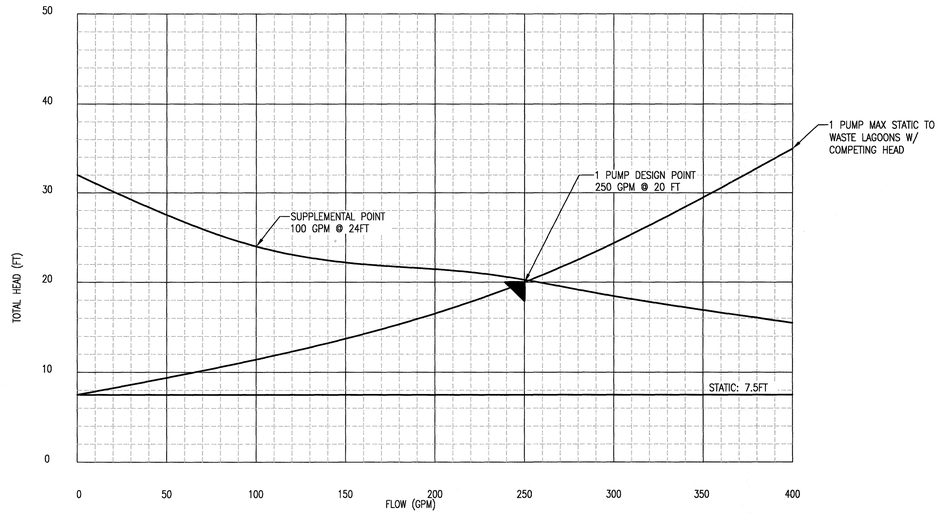

WAS PUMP CRITERIA

TOTAL NUMBER OF PUMPS	2	SUPPLEMENTARY POINT CAPACITY	750 GPM
NUMBER OF PUMPS OPERATING	1	SUPPLEMENTARY POINT TOTAL HEAD	34 FT
MOTOR NOMINAL RPM	1250 RPM	SUPPLEMENTARY POINT EFFICIENCY (MIN)	60%
HP (MAX)	7.5	NPSHR (MAX)	6 FT
SHUT OFF HEAD (MIN)	32 FT		
DESIGN POINT CAPACITY	250 GPM		
DESIGN POINT TOTAL HEAD	20 FT		
DESIGN POINT EFFICIENCY (MIN)	45%		
NPSHR (MAX)	6 FT		

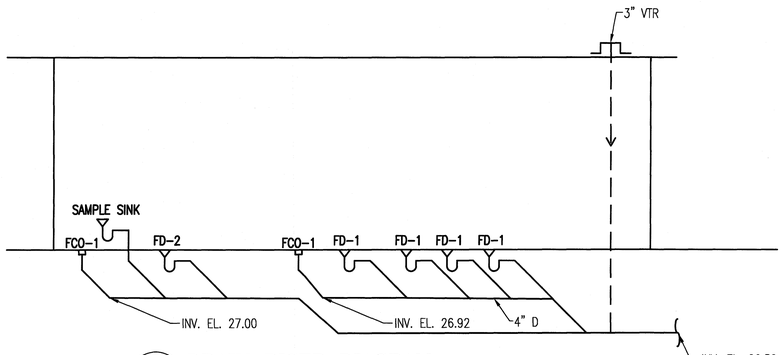

1 M08.03 DRAIN RISER DIAGRAM
SCALE: NONE

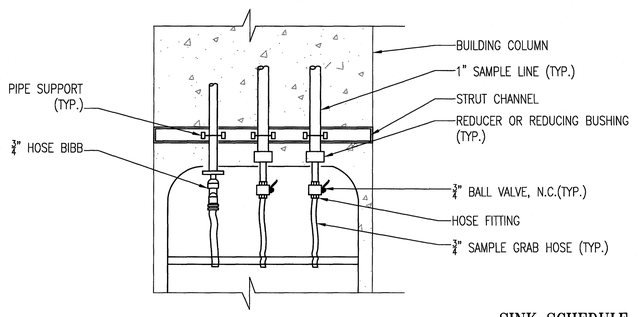

NOTES:

1. PROVIDE IDENTIFICATION LABELS FOR EACH SAMPLE LINE.
2. SAMPLE LINE ORIENTATION VARIES, CONTRACTOR SHALL FIELD ROUTE AND SUPPORT
3. SAMPLE LINE QUANTITY AS SHOWN IN SINK SCHEDULE

SINK SCHEDULE

¾" HB
1" RAS LINE
1" WAS LINE

2 M08.03 SLUDGE SAMPLE DETAIL
SCALE: NONE

REVISIONS

CLIENT INFORMATION

SUSSEX COUNTY, DE
ENGINEERING
DEPARTMENT

INLAND BAYS RWF
PHASE #2 EXPANSION:
CONTRACT S19-10

KEY PLAN

GRAPHIC SCALES

SIGNATURE

ROBERT H MCLEAN
LICENSE
No. 21388
PROFESSIONAL ENGINEER
DELAWARE
12/10/18

Whitman, Requardt & Associates, LLP
801 South Caroline Street, Baltimore, Maryland 21231

PUMP AND BLOWER BUILDING NO.2 - PUMP CURVE AND SCHEMATICS

DRAWING NO.

M08.03

SCALE: NO SCALE		
DATE: DEC. 2018	SHEET 126 OF 217	
DES: MH	DRAWN: MH	CHECK: RHM

F:\Projects\Sussex County\400-449\444-03\Design\Drawings\Phase 2\Pump Curves_SCHEMATICS_M08.03.dwg

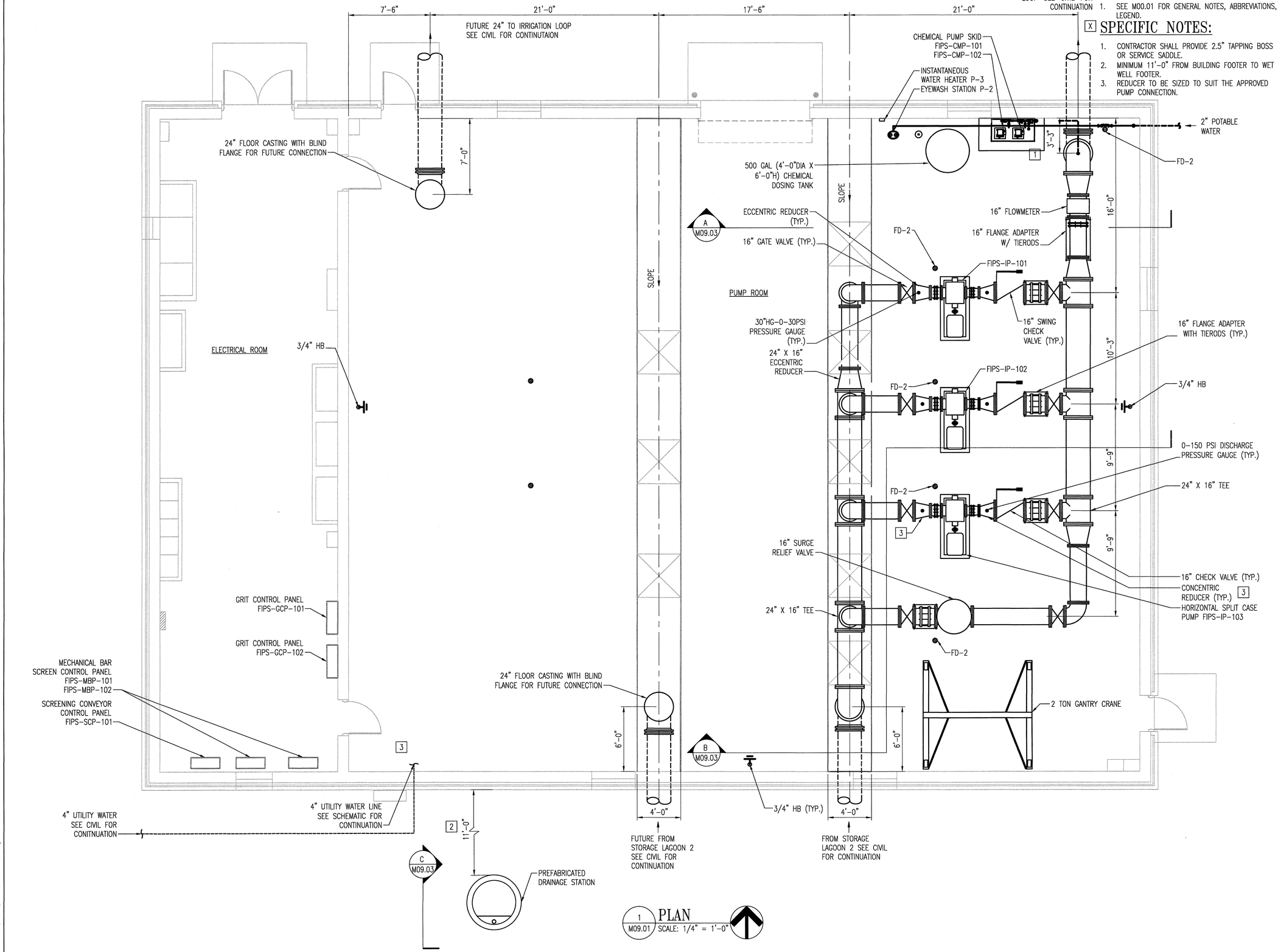

GENERAL SHEET NOTES

1. SEE M00.01 FOR GENERAL NOTES, ABBREVIATIONS, AND LEGEND.

[X] SPECIFIC NOTES:

1. CONTRACTOR SHALL PROVIDE 2.5" TAPPING BOSS OR SERVICE SADDLE.
2. MINIMUM 11'-0" FROM BUILDING FOOTER TO WET WELL FOOTER.
3. REDUCER TO BE SIZED TO SUIT THE APPROVED PUMP CONNECTION.

REVISIONS

CLIENT INFORMATION

SUSSEX COUNTY, DE
ENGINEERING
DEPARTMENT

INLAND BAYS RWF
PHASE #2 EXPANSION:
CONTRACT S19-10

KEY PLAN

GRAPHIC SCALES

0 2' 4' 8'
SCALE: 1/4" = 1'-0"

SIGNATURE

ROBERT H. McLEAN LICENSE No. 21386 DELAWARE PROFESSIONAL ENGINEER
7/11/19

WRA
Whitman, Requardt & Associates, LLP
801 South Caroline Street, Baltimore, Maryland 21231

FILTERED IRRIGATION PUMP STATION PLAN

DRAWING NO.

M09.01

SCALE: AS SHOWN		
DATE: JULY 2019	SHEET 127 OF 217	
DES: LAQ	DRAWN: MH	CHECK: RHM

N:\14256-026\CADD\14256026M09-01.dwg CADD\14256026M09-01.DWG

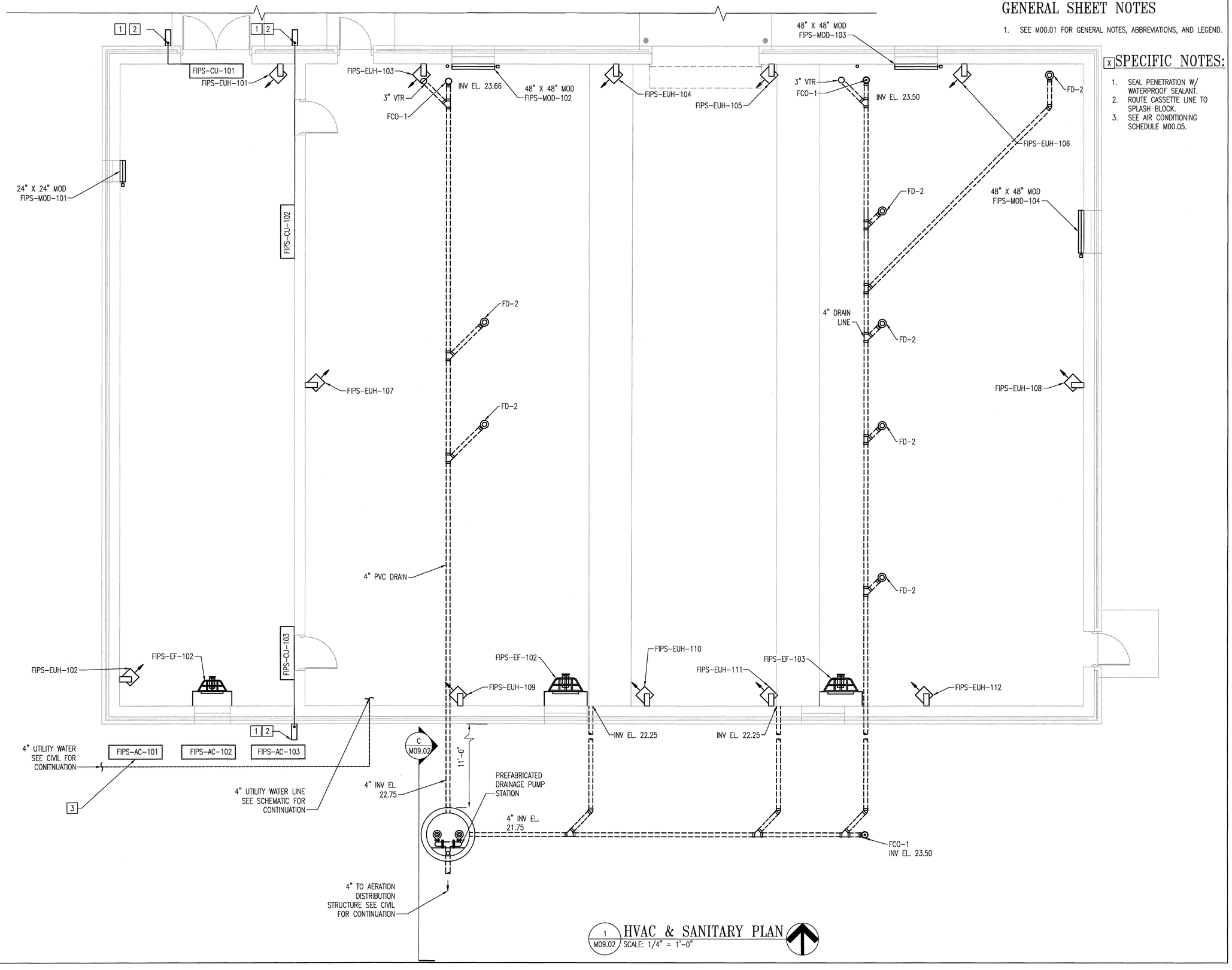

1 M09.02 HVAC & SANITARY PLAN
SCALE: 1/4" = 1'-0"

GENERAL SHEET NOTES

1. SEE M00.01 FOR GENERAL NOTES, ABBREVIATIONS, AND LEGEND.

X SPECIFIC NOTES:

1. SEAL PENETRATION W/ WATERPROOF SEALANT.
2. ROUTE CASSETTE LINE TO SPLASH BLOCK.
3. SEE AIR CONDITIONING SCHEDULE M00.05.

REVISIONS

CLIENT INFORMATION

SUSSEX COUNTY, DE
ENGINEERING
DEPARTMENT

INLAND BAYS RWF
PHASE #2 EXPANSION:
CONTRACT S19-10

KEY PLAN

GRAPHIC SCALES

0 2' 4' 8'
SCALE: 1/4" = 1'-0"

SIGNATURE

ROBERT H McLEAN
LICENSE
No. 21386
DELAWARE
PROFESSIONAL ENGINEER
7/11/19

Whitman, Requardt & Associates, LLP
801 South Caroline Street, Baltimore, Maryland 21231

FILTERED IRRIGATION PUMP STATION - HVAC & SANITARY PLAN

DRAWING NO.

M09.02

SCALE: AS SHOWN		
DATE: JULY 2019	SHEET 128 OF 217	
DES: MH	DRAWN: MH	CHECK: RHM

N:\14256-026\CADD\14256026M09-02.dwg

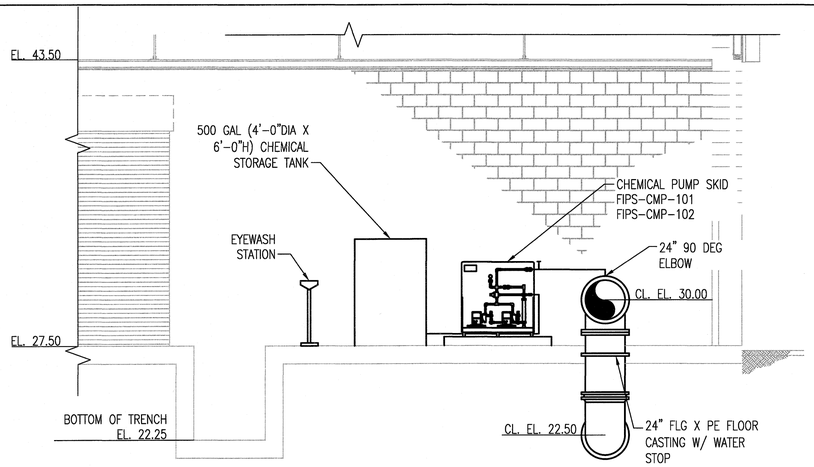

A M09.03 PARTIAL SECTION
SCALE: 1/4" = 1'-0"
REF: M09.01

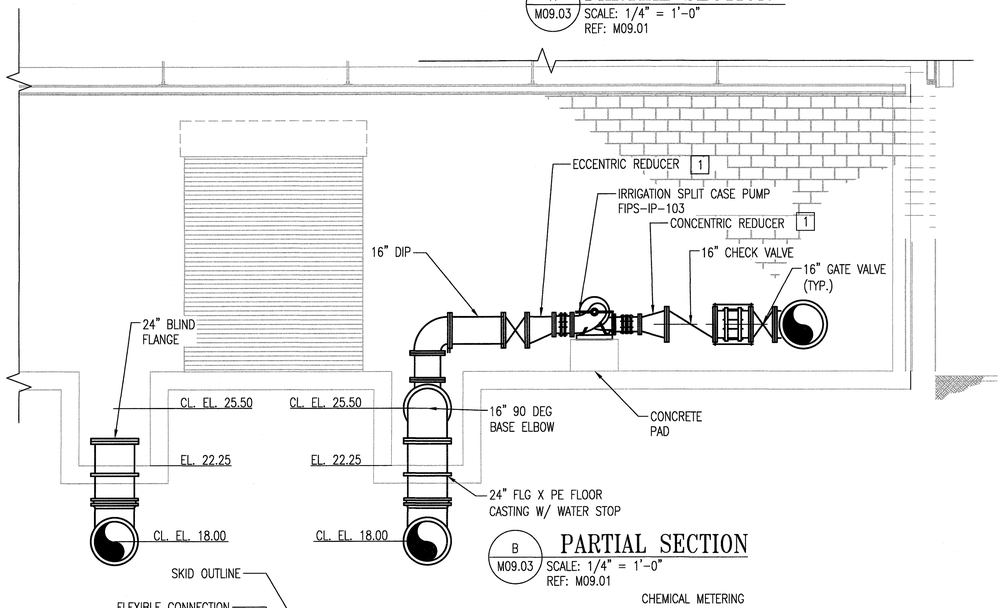

B M09.03 PARTIAL SECTION
SCALE: 1/4" = 1'-0"
REF: M09.01

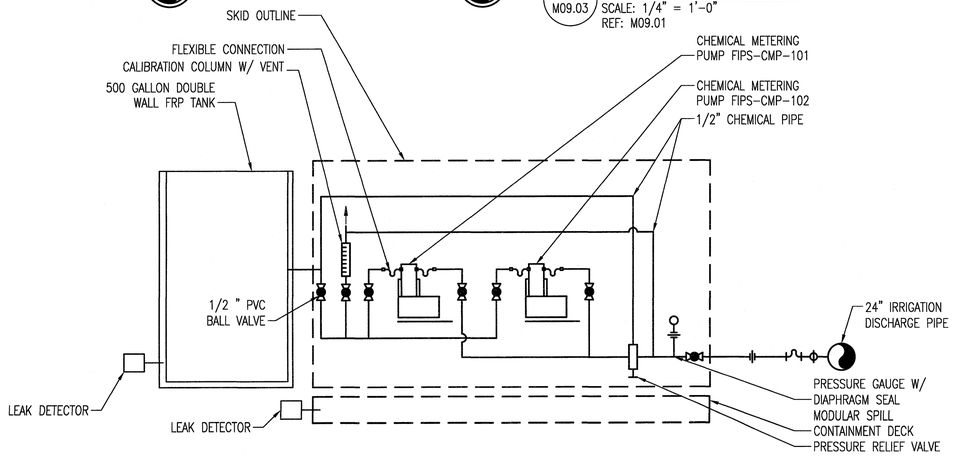

1 M09.03 SODIUM HYPOCHLORITE SYSTEM SCHEMATIC

GENERAL SHEET NOTES

1. SEE M00.01 FOR GENERAL NOTES, ABBREVIATIONS, AND LEGEND.

[X] SPECIFIC NOTES:

1. REDUCER TO BE SIZED TO SUIT THE APPROVED PUMP.
2. GATE VALVE OPERATORS SHALL BE HORIZONTAL FACING TOWARDS THE ELECTRICAL ROOM.

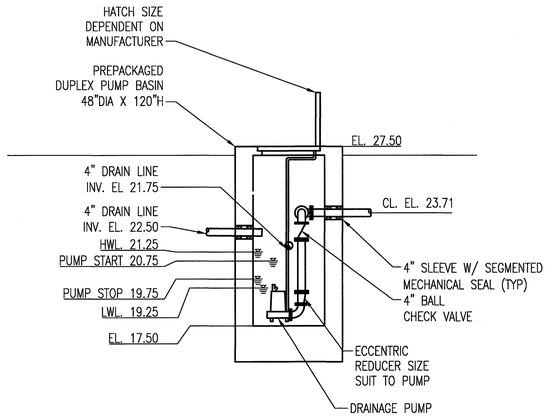

C M09.03 SECTION
SCALE: 1/4" = 1'-0"
REF: M09.01

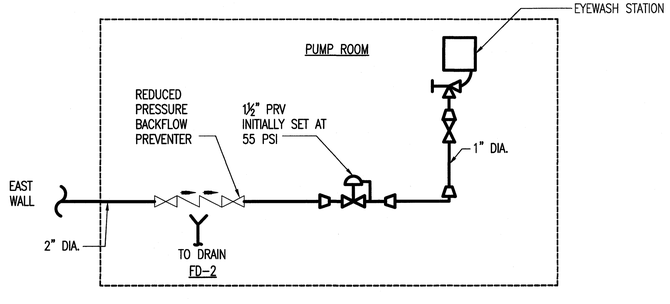

2 M09.03 POTABLE WATER SYSTEM SCHEMATIC

REVISIONS		

CLIENT INFORMATION

SUSSEX COUNTY, DE
ENGINEERING DEPARTMENT

INLAND BAYS RWF
PHASE #2 EXPANSION:
CONTRACT S19-10

KEY PLAN

GRAPHIC SCALES

0 2' 4' 8'
SCALE: 1/4" = 1'-0"

SIGNATURE

ROBERT H MCLEAN LICENSE No. 21386 DELAWARE PROFESSIONAL ENGINEER
7/11/19

WRA
Whitman, Requardt & Associates, LLP
801 South Caroline Street, Baltimore, Maryland 21231

FILTERED IRRIGATION PUMP STATION SECTIONS AND SCHEMATICS

DRAWING NO.
M09.03

SCALE: AS SHOWN		
DATE: JULY 2019	SHEET 129 OF 229	
DES: LAQ	DRAWN: MH	CHECK: RHM

PLOTTED: 7/11/2019 - 10:28:53 AM, CARD/1, 14.25x20.25x0.00, 1=1, 50.dwg

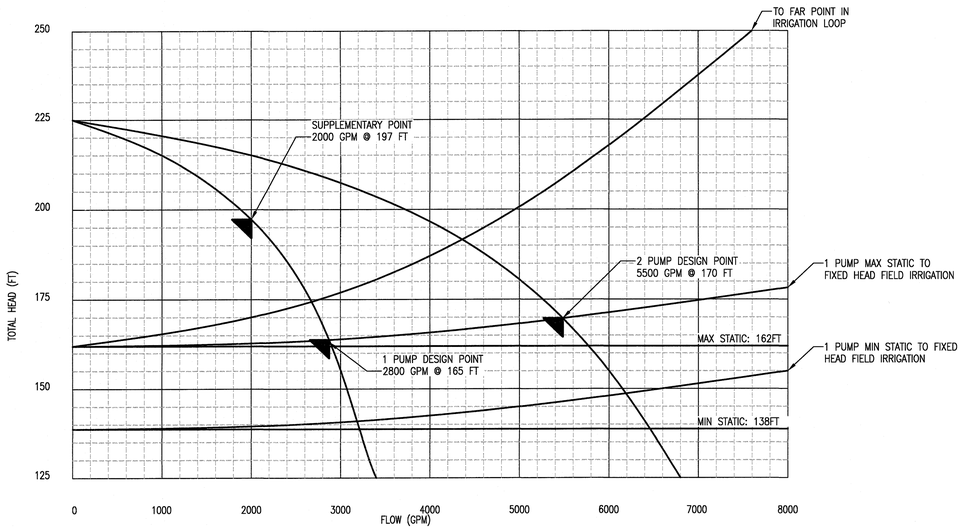

IRRIGATION PUMP CRITERIA

TOTAL NUMBER OF PUMPS	3	SUPPLEMENTARY POINT CAPACITY	2000 GPM
NUMBER OF PUMPS OPERATING	2	SUPPLEMENTARY POINT TOTAL HEAD	197 FT
MOTOR NOMINAL RPM	1800 RPM	SUPPLEMENTARY POINT EFFICIENCY (MIN)	80%
HP (MAX)	150	NPSHR (MAX)	11 FT
SHUT OFF HEAD (MIN)	225 FT		
DESIGN POINT CAPACITY	2800 GPM		
DESIGN POINT TOTAL HEAD	165 FT		
DESIGN POINT EFFICIENCY (MIN)	84%		
NPSHR (MAX)	19.7 FT		

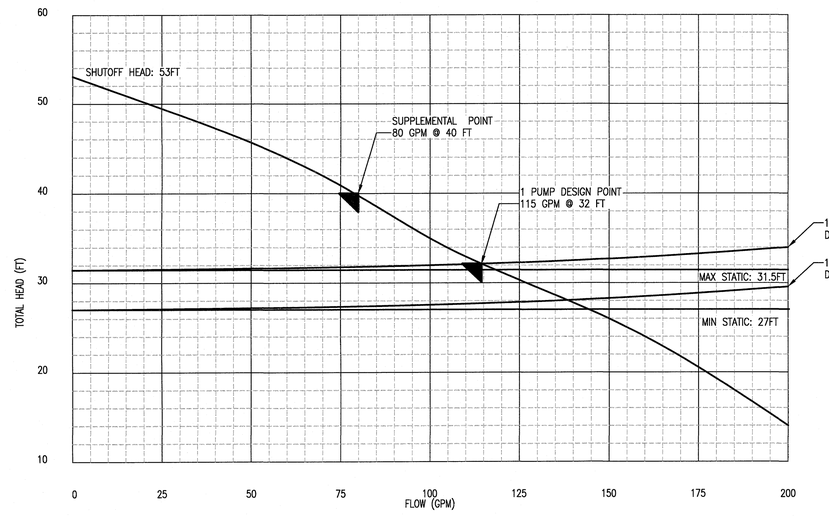

DRAINAGE PUMP CRITERIA

TOTAL NUMBER OF PUMPS	2	SUPPLEMENTARY POINT CAPACITY	80 GPM
NUMBER OF PUMPS OPERATING	1	SUPPLEMENTARY POINT TOTAL HEAD	40 FT
MOTOR NOMINAL RPM	2700 RPM	SUPPLEMENTARY POINT EFFICIENCY (MIN)	30%
HP (MAX)	2	NPSHR (MAX)	8.5 FT
SHUT OFF HEAD (MIN)	54 FT		
DESIGN POINT CAPACITY	115 GPM		
DESIGN POINT TOTAL HEAD	32 FT		
DESIGN POINT EFFICIENCY (MIN)	40%		
NPSHR (MAX)	8.5 FT		

GENERAL SHEET NOTES

1. SEE M000.01 FOR GENERAL NOTES, ABBREVIATIONS, AND LEGEND.

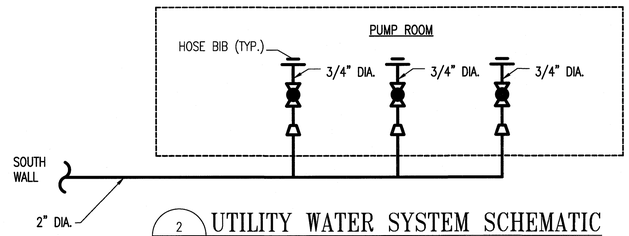

2 / M09.04 UTILITY WATER SYSTEM SCHEMATIC
SCALE: NONE

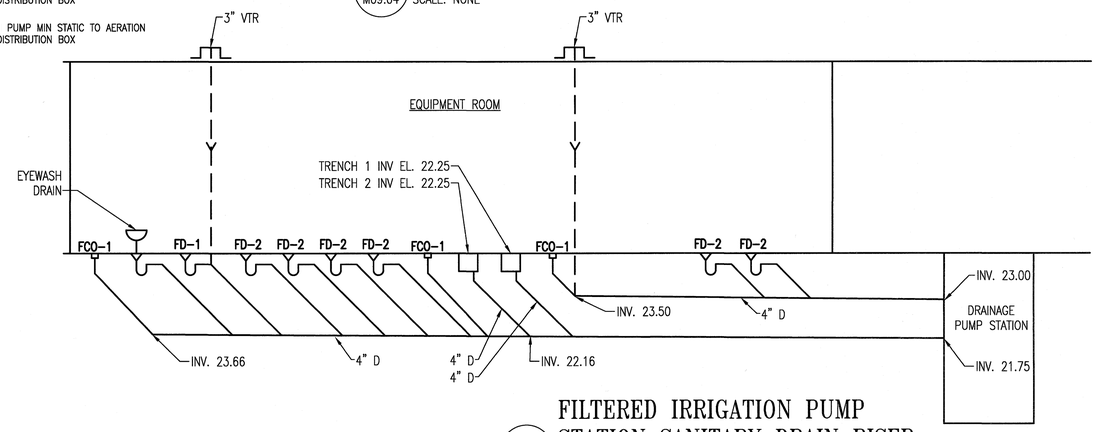

1 / M09.04 FILTERED IRRIGATION PUMP STATION SANITARY DRAIN RISER
SCALE: NONE

REVISIONS

CLIENT INFORMATION

SUSSEX COUNTY, DE
ENGINEERING DEPARTMENT

INLAND BAYS RWF
PHASE #2 EXPANSION:
CONTRACT S19-10

KEY PLAN

GRAPHIC SCALES

SIGNATURE

ROBERT H McLEAN LICENSE No. 21386 DELAWARE PROFESSIONAL ENGINEER
7/11/19

WRA
Whitman, Requardt & Associates, LLP
801 South Caroline Street, Baltimore, Maryland 21231

FILTERED IRRIGATION PUMP STATION PUMP CURVES AND SCHEMATIC

DRAWING NO.
M09.04

SCALE: AS SHOWN		
DATE: JULY 2019	SHEET 130 OF 217	
DES: MH	DRAWN: MH	CHECK: RHM

M:\1425\02\CADD\1425020EM09-04.dwg

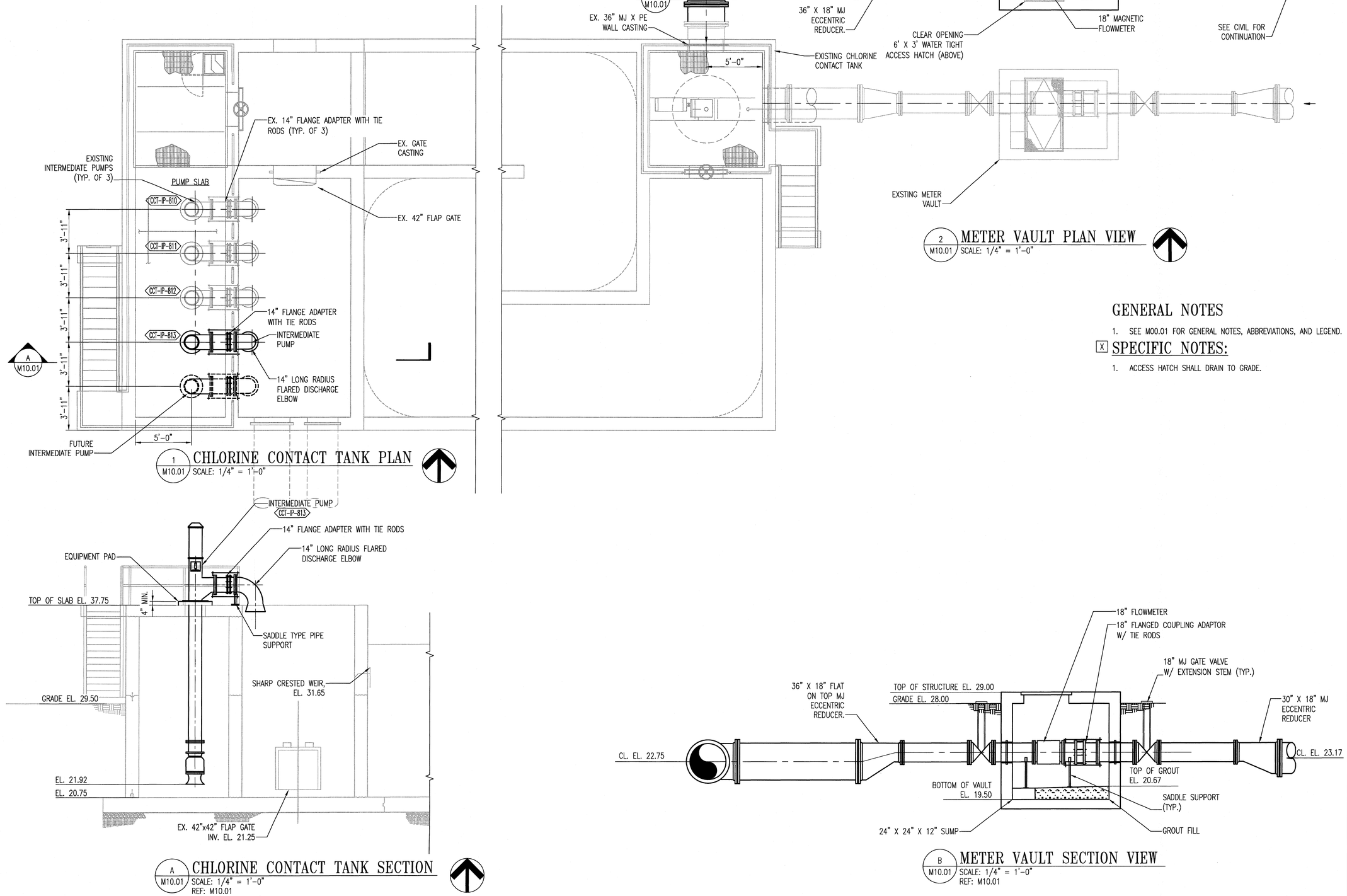

GENERAL NOTES

1. SEE M00.01 FOR GENERAL NOTES, ABBREVIATIONS, AND LEGEND.

[X] SPECIFIC NOTES:

1. ACCESS HATCH SHALL DRAIN TO GRADE.

REVISIONS

CLIENT INFORMATION

SUSSEX COUNTY, DE
ENGINEERING
DEPARTMENT

INLAND BAYS RWF
PHASE #2 EXPANSION:
CONTRACT S19-10

KEY PLAN

GRAPHIC SCALES

0 2' 4' 8'
SCALE: 1/4" = 1'-0"

SIGNATURE

ROBERT H McLEAN LICENSE No. 21386 DELAWARE PROFESSIONAL ENGINEER
12/10/18

WRA
Whitman, Requardt & Associates, LLP
801 South Caroline Street, Baltimore, Maryland 21231

CHLORINE CONTACT TANK PARTIAL PLAN AND SECTION

DRAWING NO.

M10.01

SCALE: AS SHOWN		
DATE: DEC. 2018		SHEET 131 OF 217
DES: MH	DRAWN: MH	CHECK: RHM

P:\Projects\Sussex County\Inland Bays RWF Phase 2\14 Drawings\Plan Sets\Contract 2\M10.01 CHLORINE CONTACT TANK PARTIAL PLAN AND SECTION.dwg, 12/10/2018 10:01:47 AM, Mark Hall

GENERAL SHEET NOTES

1. SEE M00.01 FOR GENERAL NOTES, ABBREVIATIONS, AND LEGEND.

[X] SPECIFIC NOTES:

1. REPLACE EXISTING 90 ELBOW WITH 2" TEE TO CONTINUE SUCTION HEADER FOR PUMPS SHF-SHP-904 & SHF-SHP-905.
2. CONNECT CALIBRATION CYLINDER VENT PIPING TO EXISTING PIPING.

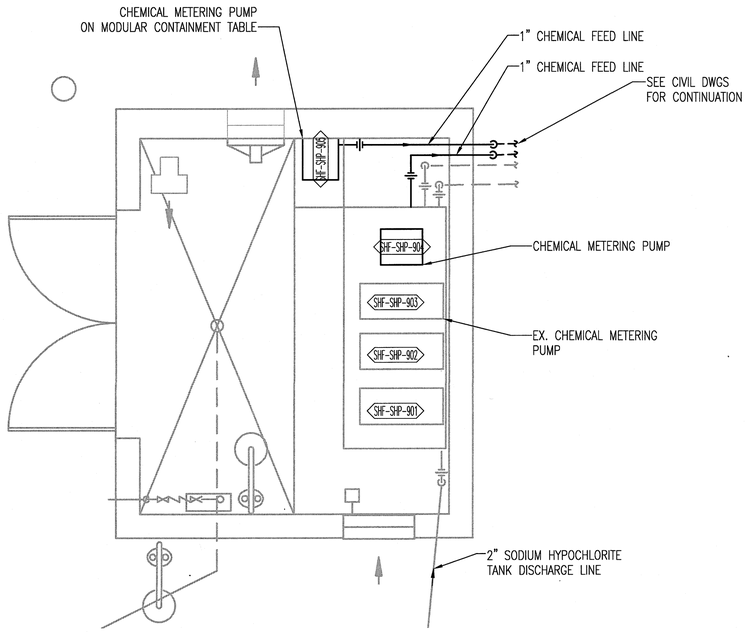

1 / M11.01 PLAN
SCALE: 1/2" = 1'-0"

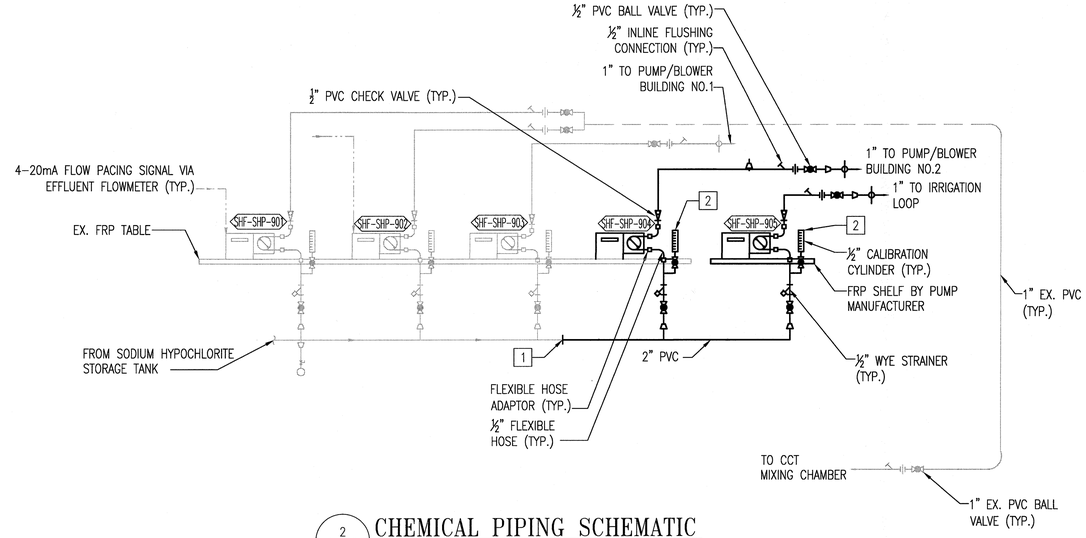

2 / M11.01 CHEMICAL PIPING SCHEMATIC
SCALE: NONE

REVISIONS		

CLIENT INFORMATION

SUSSEX COUNTY, DE
ENGINEERING
DEPARTMENT

INLAND BAYS RWF
PHASE #2 EXPANSION:
CONTRACT S19-10

KEY PLAN

GRAPHIC SCALES

0 1' 2' 4'
SCALE: 1/2" = 1'-0"

SIGNATURE

ROBERT H McLEAN LICENSE No. 21386 DELAWARE PROFESSIONAL ENGINEER
12/10/18

Whitman, Requardt & Associates, LLP
801 South Caroline Street, Baltimore, Maryland 21231

CHEMICAL BUILDING PLAN AND SCHEMATIC

DRAWING NO.

M11.01

SCALE: AS SHOWN		
DATE: DEC. 2018	SHEET 132 OF 217	
DES: MH	DRAWN: MH	CHECK: RHM

P:\Projects\Sussex County\Inland Bays RWF Phase #2 Expansion\Design\Drawings\Plotting\M11-01.dwg

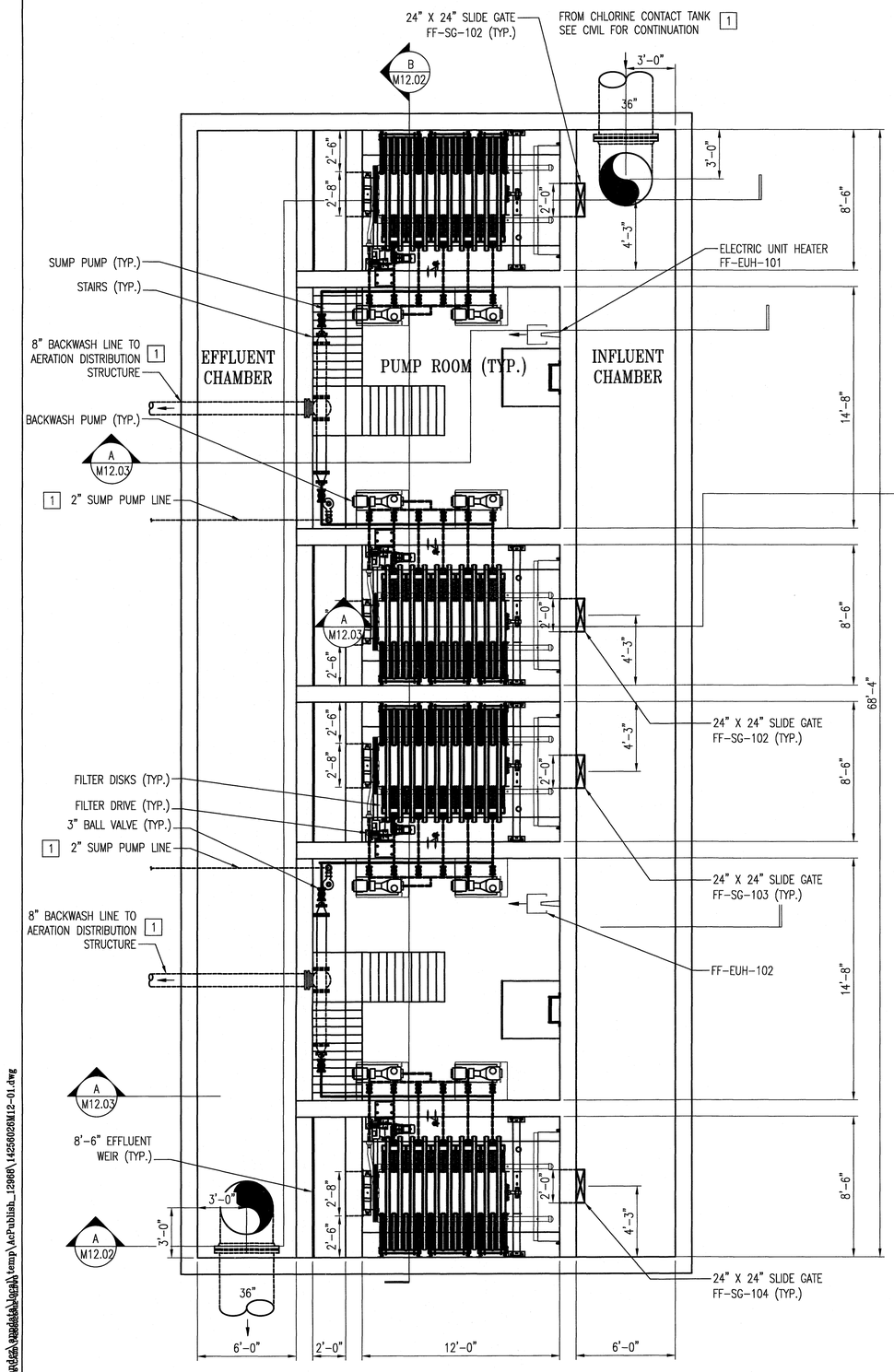

1 M12.01 FILTRATION FACILITY LOWER PLAN
SCALE: 3/8" = 1'-0"

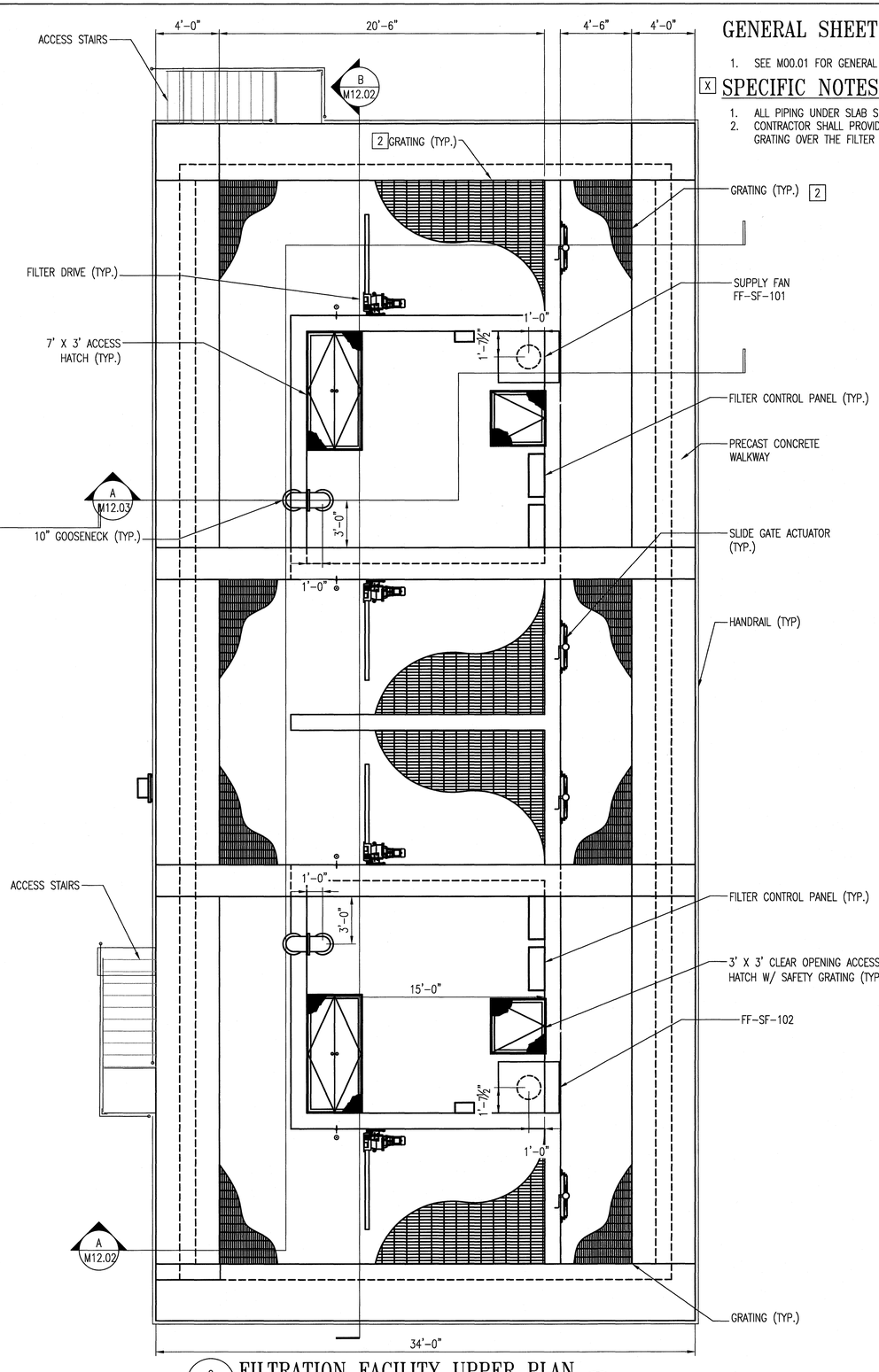

2 M12.01 FILTRATION FACILITY UPPER PLAN
SCALE: 3/8" = 1'-0"

GENERAL SHEET NOTES

1. SEE M00.01 FOR GENERAL NOTES, ABBREVIATIONS, AND LEGEND.

X SPECIFIC NOTES:

1. ALL PIPING UNDER SLAB SHALL BE CONCRETE ENCASED.
2. CONTRACTOR SHALL PROVIDE REMOVABLE ALUMINUM GRATING OVER THE FILTER TANKS AND CHANNELS.

REVISIONS

CLIENT INFORMATION

SUSSEX COUNTY, DE
ENGINEERING DEPARTMENT

INLAND BAYS RWF
PHASE #2 EXPANSION:
CONTRACT S19-10

KEY PLAN

GRAPHIC SCALES

0 1' 2' 3' 5'
SCALE: 3/8" = 1'-0"

SIGNATURE

ROBERT H McLEAN LICENSE No. 21386 DELAWARE PROFESSIONAL ENGINEER
7/11/19

WRA
Whitman, Requardt & Associates, LLP
801 South Caroline Street, Baltimore, Maryland 21231

FILTRATION FACILITY PLAN

DRAWING NO.
M12.01

SCALE: AS SHOWN		
DATE: JULY 2019	SHEET XYZ OF 229	
DES: MH	DRAWN: MH	CHECK: RHM

C:\Users\mbernander\appdata\local\temp\AcPublish_12968\14256026M12-01.dwg

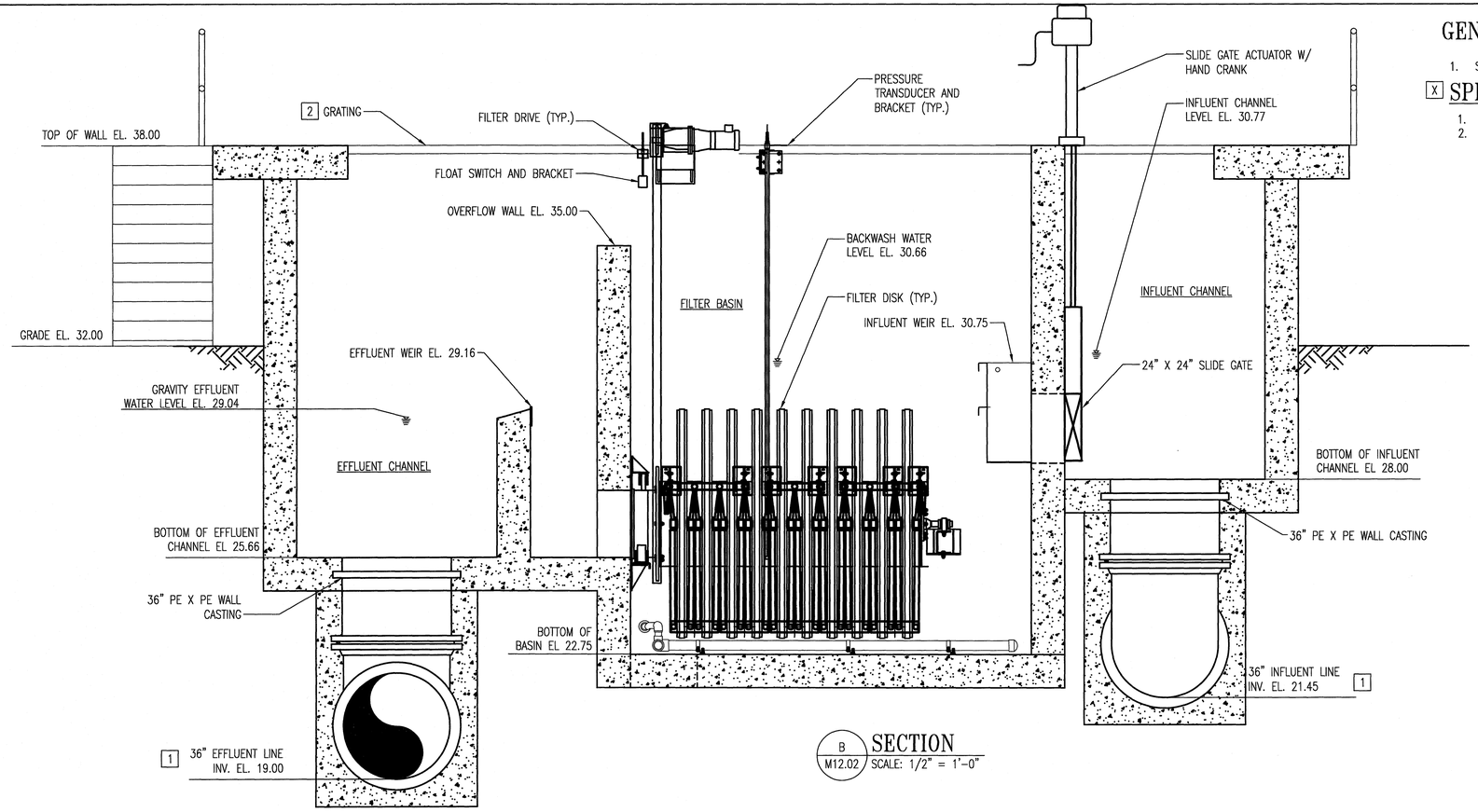

B M12.02 SECTION
SCALE: 1/2" = 1'-0"

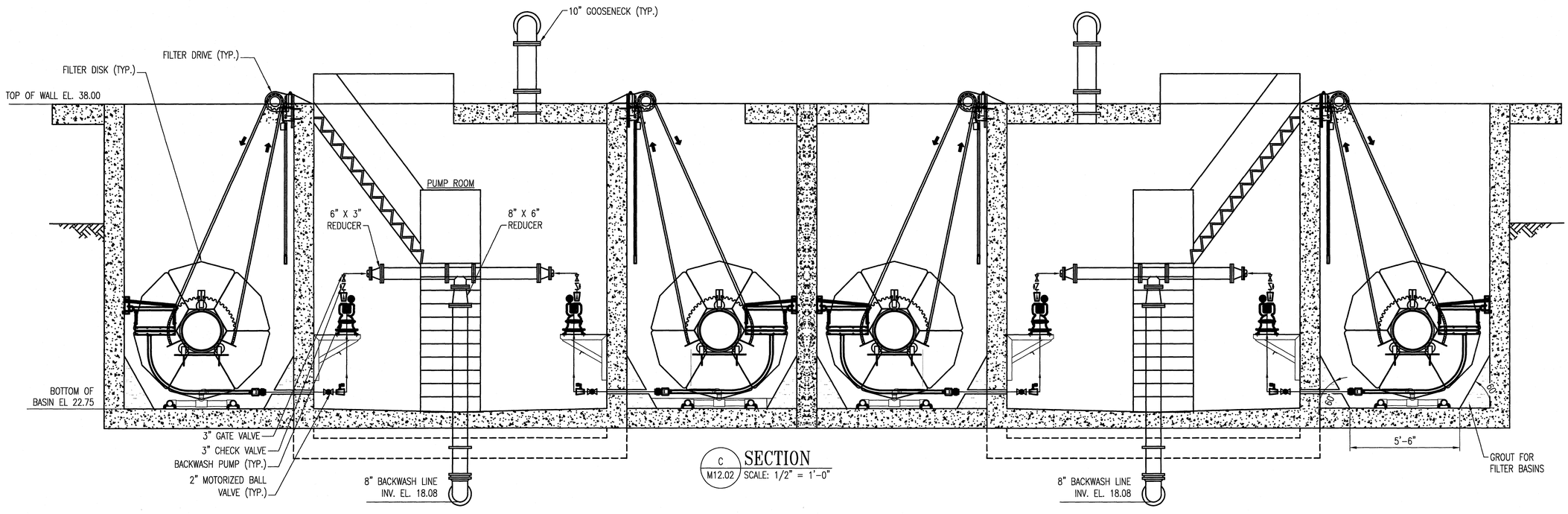

C M12.02 SECTION
SCALE: 1/2" = 1'-0"

GENERAL SHEET NOTES

1. SEE M00.01 FOR GENERAL NOTES, ABBREVIATIONS, AND LEGEND.

X SPECIFIC NOTES:

1. ALL PIPING UNDER SLAB SHALL BE CONCRETE ENCASED.
2. CONTRACTOR SHALL PROVIDE REMOVABLE ALUMINUM GRATING OVER THE FILTER TANKS AND CHANNELS.

REVISIONS

CLIENT INFORMATION

SUSSEX COUNTY, DE
ENGINEERING
DEPARTMENT

INLAND BAYS RWF
PHASE #2 EXPANSION:
CONTRACT S19-10

KEY PLAN

GRAPHIC SCALES

0 1' 2' 4'
SCALE: 1/2" = 1'-0"

SIGNATURE

ROBERT H McLEAN
LICENSE
No. 21386
DELAWARE
PROFESSIONAL ENGINEER
7/11/19

Whitman, Requardt & Associates, LLP
801 South Caroline Street, Baltimore, Maryland 21231

FILTRATION FACILITY SECTIONS

DRAWING NO.

M12.02

SCALE: AS SHOWN		
DATE: JULY 2019		SHEET XYZ OF 229
DES: MH	DRAWN: MH	CHECK: RHM

N:\14256-026\CADD\1426602BM12-02.dwg

PLOTDATE: 7/11/2019 8:45:57 AM PLOTSTYLE: PDF-Color.ctb PLOTTED BY: Robert McLean

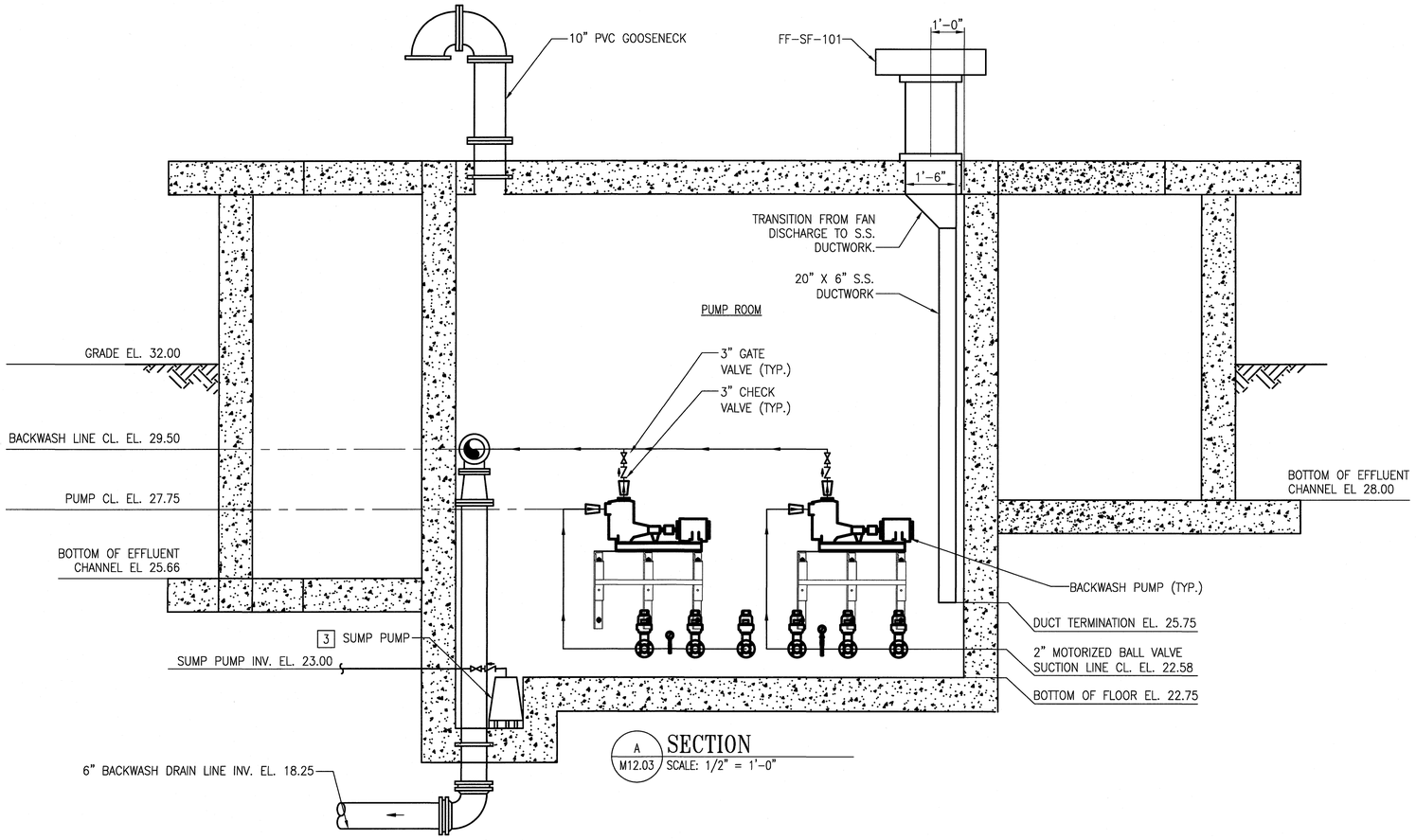

A / M12.03 SECTION
SCALE: 1/2" = 1'-0"

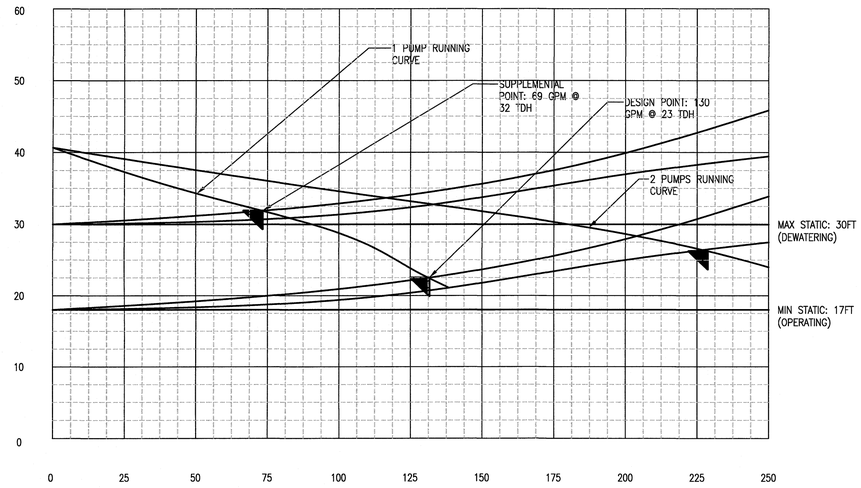

BACKWASH PUMP CRITERIA

TOTAL NUMBER OF PUMPS	2	SUPPLEMENTARY POINT CAPACITY	69 GPM
NUMBER OF PUMPS OPERATING	1	SUPPLEMENTARY POINT TOTAL HEAD	32 FT
MOTOR NOMINAL RPM	1750 RPM	SUPPLEMENTARY POINT EFFICIENCY (MIN)	35%
HP (MAX)	2	NPSHR (MAX)	5 FT
SHUT OFF HEAD (MIN)	42 FT		
DESIGN POINT CAPACITY	130 GPM		
DESIGN POINT TOTAL HEAD	23 FT		
DESIGN POINT EFFICIENCY (MIN)	40%		
NPSHR (MAX)	10 FT		

GENERAL SHEET NOTES

1. SEE M00.01 FOR GENERAL NOTES, ABBREVIATIONS, AND LEGEND.

X SPECIFIC NOTES:

1. ALL PIPING UNDER SLAB SHALL BE CONCRETE ENCASED.
2. CONTRACTOR SHALL PROVIDE REMOVABLE ALUMINUM GRATING OVER THE FILTER TANKS AND CHANNELS.
3. 2" SUMP PUMP DISCHARGE PIPING SHALL BE ROUTED UNDER THE EFFLUENT CHANNEL W/ INVERT OF 23.00.

REVISIONS

CLIENT INFORMATION

SUSSEX COUNTY, DE
ENGINEERING
DEPARTMENT

INLAND BAYS RWF
PHASE #2 EXPANSION:
CONTRACT S19-10

KEY PLAN

GRAPHIC SCALES

0 1' 2' 4'
SCALE: 1/2" = 1'-0"

SIGNATURE

ROBERT H. McLEAN
LICENSE
No. 21386
DELAWARE
PROFESSIONAL ENGINEER
7/11/19

Whitman, Requardt & Associates, LLP
801 South Caroline Street, Baltimore, Maryland 21231

FILTRATION FACILITY SECTION AND PUMP CURVE

DRAWING NO.

M12.03

SCALE: AS SHOWN		
DATE: JULY 2019	SHEET x OF 229	
DES: MH	DRAWN: MH	CHECK: RHM

M:\14256-0285\CADD\14256028M12-03.dwg

ELECTRICAL LEGEND

LIGHTING

- LIGHTING FIXTURE
- STANCHON MOUNTED LIGHTING FIXTURE
- WALL MOUNTED LIGHTING FIXTURE
- EXIT LIGHTING FIXTURE, ARROW, INDICATES DIRECTION
- EXIT LIGHTING FIXTURE TYPE SYMBOL (SEE LIGHTING FIXTURES SCHEDULE ON DRAWING E00.05)
- EMERGENCY BATTERY POWERED LIGHTING UNIT
- SINGLE POLE MOUNTED LED LIGHTING FIXTURE

SWITCHES

- S — SINGLE POLE SWITCH, 20A, 120–277V
- S_3 — THREE WAY SWITCH, 20A, 120–277V
- S_4 — FOUR WAY SWITCH, 20A, 120–277V
- S_a — SINGLE POLE SWITCH, 20A, 120–277V, LOWER CASE SUBSCRIPT WHEN USED INDICATES FIXTURES CONTROLLED
- C — LIGHTING CONTACTOR 277V
- PUSH BUTTON
- PC — PHOTO CELL

RECEPTACLES

- SINGLE RECEPTACLE, 20A, 125V AC, MOUNTED 1'–6" AFF (UON)
- TRACK LIGHTING RECEPTACLE, 15A, 125V AC, MOUNT 8'–0" AFF (UON)
- DUPLEX CONVENIENCE RECEPTACLE, 20A, 125V AC, MOUNT 1'–6" AFF (UON)
- $_G$ — DUPLEX CONVENIENCE RECEPTACLE 20A, 125V AC, SUBSCRIPT "G" INDICATES GFI TYPE, MOUNT 18" AFF (UON)
- $_G$ — DUPLEX CONVENIENCE RECEPTACLE 20A, 125V AC, SUBSCRIPT "G" INDICATES GFI TYPE, MOUNT 12" ABOVE COUNTER (UON)
- $_W$ — DUPLEX CONVENIENCE RECEPTACLE 20A, 125V AC, SUBSCRIPT "W" INDICATES WEATHERPROOF TYPE, MOUNT 18" AFF (UON)
- DOUBLE DUPLEX CONVENIENCE RECEPTACLE 20A, 125V AC. MOUNT 18" AFF (UON)
- SPECIAL PURPOSE RECEPTACLE 20A OR 30A OR 50A, 3P, 4W, 480V AC MOUNT 48" AFF (UON)
- SPECIAL PURPOSE RECEPTACLE 20A OR 30A OR 50A, 3P, 4W, 208V AC MOUNT 48" AFF (UON)

EQUIPMENT CONNECTION

- ϕ_2 — MOTOR, NUMBER INDICATES HORSEPOWER
- EH — ELECTRIC UNIT HEATER
- J — JUNCTION BOX
- E — EQUIPMENT CONNECTION AS NOTED
- VAV — VARIABLE AIR VOLUME BOX
- DWH — DOMESTIC WATER HEATER
- CUH — CABINET UNIT HEATER
- 34 — SHOP EQUIPMENT, NUMERAL INDICATES EQUIPMENT NUMBER. SEE EQUIPMENT SCHEDULE ON DWG E–XX FOR DETAIL.
- MOD — MOTOR OPERATED DAMPER
- CP — CONTROL PANEL

SAFETY SWITCHED/BREAKERS/STARTERS

- 30/3 — NON–FUSED 30 AMP 3 POLE DISCONNECT SWITCH UON BY SUBSCRIPT, SUBSCRIPT INDICATES AMPACITY AND NUMBER OF POLES
- F 15/3 — FUSED DISCONNECT SWITCH, SUBSCRIPT INDICATES FUSED SIZE 2, NEMA SIZE 1 STARTER (UON)
- CP 30/3 — CONTROL PANEL WITH DISCONNECT RATED SWITCH, NON–FUSED 30 AMP 3 POLE DISCONNECT SWITCH UON BY SUBSCRIPT, SUBSCRIPT INDICATES AMPACITY AND NUMBER OF POLES. REFER TO INSTRUMENTATION DRAWINGS FOR ADDITIONAL CONTROL PANEL REQUIREMENTS.
- 2 ⊠ — MAGNETIC MOTOR STARTER, SUBSCRIPT INDICATES NEMA SIZE 2, NEMA SIZE 1 STARTER (UON)
- 2 ⊠ 60/3 — MAGNETIC MOTOR STARTER, SUBSCRIPT INDICATES NEMA SIZE 2, NEMA SIZE 1 STARTER UON. 60 = SWITCH SIZE AND 3 = NO. OF POLES. 30 AMPS, 3 POLES (UON).
- S_M — MANUAL MOTOR STARTER SWITCH WITH OVERLOAD. PROVIDE HOA AS REQUIRED.
- VFD CP 18 — VARIABLE FREQUENCY DRIVE CONTROL PANEL, SUBSCRIPT INDICATES INDICATES PULSE
- VFD — VARIABLE FREQUENCY DRIVE, INDIVIDUALLY MOUNTED.
- VFD BP — VARIABLE FREQUENCY DRIVE WITH BYPASS STARTER
- SS — SOLID STATE STARTER, INDIVIDUALLY MOUNTED
- 200/225 — ENCLOSED CIRCUIT BREAKER, 3 POLE, UON. 225 = FRAME SIZE, 200 = TRIP SIZE.
- 200/225 — CIRCUIT BREAKER, 3 POLE, UON. 225 = FRAME SIZE, 200 = TRIP SIZE.
- 800/1200 ICCB — INSULATED CASE CIRCUIT BREAKER, 3 POLE, UON. 1200 = FRAME SIZE, 800 = TRIP SIZE.

PANELBOARDS

- ELECTRICAL PANEL
- ELECTRICAL PANELBOARD (208Y/120V, 4W+G)
- ELECTRICAL PANELBOARD (480Y/277V, 4W+G)

GROUNDING

- GROUND ROD, 3/4" DIAMETER X 10'–0" LONG UON
- AIR TERMINAL

SITE

- EXISTING HANDHOLE
- G — GROUND CONDUCTOR
- EXISTING HANDHOLE
- OR E — UNDERGROUND ENCASED DUCTBANK
- UNDERGROUND DIRECT BURIED CONDUIT
- EXISTING DUCT BANK TO BE REMOVED
- H — NEW HANDHOLE – SUBSCRIPT E INDICATES ELECTRICAL AND C INDICATES CONTROLS
- M — NEW MANHOLE – SUBSCRIPT E INDICATES ELECTRICAL AND C INDICATES CONTROLS
- DBXXX / E00.XX — DUCTBANK SECTION
- E E — DOT INDICATES DUCTBANK FOR SECTION

WIRING

- HPA–1,3,5 — BRANCH CIRCUIT HOMERUN TO PANELBOARD. HPA DENOTES TO PANEL HPA AND NUMERALS IDENTIFY CIRCUIT NUMBERS. ARROWS DENOTE NO. OF CIRCUITS.
- CONDUIT WITH WIRES, #12 AWG IN 3/4" C. UNLESS OTHERWISE NOTED NUMBER OF CONDUCTORS AS REQUIRED. PROVIDE SEPARATE NEUTRALS FOR ALL SINGLE PHASE CIRCUITS.
- BRANCH CIRCUIT OR FEEDER WIRING IN CONDUIT. 2#12 CONDUCTORS AND 1#12 GROUND IN A 3/4"C (UON)
- INDICATES A CONDUIT RUN CONCEALED IN CEILING WALL, FLOOR, OR ABOVE SUSPENDED CEILING (UON).
- EXPOSED CONDUIT RUN AS INDICATED.
- CONDUIT TURNED UP
- CONDUIT TURNED DOWN
- G — GROUNDING CONDUCTOR (BCSD)
- UNDERGROUND DIRECT BURIED CONDUIT
- RACEWAY WITH SEALING FITTING

CONTROL DEVICES

- SV — SOLENOID VALVE
- LS — LIMIT SWITCH
- T — THERMOSTAT
- FS — FLOW SWITCH
- DM — DAMPER MOTOR
- FT — FLOW TRANSMITTER
- CURRENT TRANSFORMER
- PM — POWER MONITOR
- SPD — SURGE PROTECTION DEVICE
- ZS — CIRCUIT BREAKER POSITION SWITCH
- GF — GROUND FAULT DETECTION RELAY
- TU — CIRCUIT BREAKER TRIP UNIT
- FUSE
- FUSED SWITCH
- CONTROL CONTACT

TELEPHONE/DATA

- TELEPHONE CABINET
- ▼ — TELEPHONE OUTLET IN WALL, 4" BOX WITH DOUBLE GAUGE RING, MOUNT 18" AFF (UON).

MISCELLANEOUS

- 1 — SPECIFIC NOTE NUMBER
- 1 — FEEDER SIZE
- A / XXX — SECTION NUMBER / DRAWING NUMBER
- A / A6.1 — DETAIL NUMBER / DRAWING NUMBER WHERE SHOWN

NOTE:
NOT ALL SYMBOLS SHOWN IN LEGEND MAY BE USED.

REVISIONS		

CLIENT INFORMATION

SUSSEX COUNTY, DE
ENGINEERING
DEPARTMENT

INLAND BAYS RWF
PHASE #2 EXPANSION:
CONTRACT S19–10

KEY PLAN

GRAPHIC SCALES

SIGNATURE

IL HWAN KIM
LICENSE
No. 19294
DELAWARE
PROFESSIONAL ENGINEER
12–14–18

Whitman, Requardt & Associates, LLP
801 South Caroline Street, Baltimore, Maryland 21231

ELECTRICAL
LEGEND

DRAWING NO.

E00.01

SCALE: NONE		
DATE: DEC. 2018	SHEET 133 OF 217	
DES: JPS	DRAWN: KK	CHECK: IHK

PLOT DATE: 12/14/2018 2:53:38 PM PAGE SETUP: VRA-PDF (36X24) PLOT STYLE: VRA_2006.CTB PAPER SIZE:ARCH FULL BLEED D (36.00 X 24.00 INCHES)
N:\14256-020\CADD\14256002E00-01.dwg

ELECTRICAL GENERAL NOTES AND ABBREVIATIONS

GENERAL NOTES

1. INSTALLATION OF ALL ELECTRICAL WORK SHALL CONFORM TO THE LATEST ACCEPTED EDITION OF THE NATIONAL ELECTRICAL CODE (NFPA 70), AND ALL APPLICABLE LOCAL CODES.

2. CONDUIT RUNS ARE SHOWN DIAGRAMMATICALLY ONLY AND SHALL BE INSTALLED IN A MANNER TO PREVENT CONFLICTS WITH EQUIPMENT AND STRUCTURAL CONDITIONS. EXPOSED CONDUITS SHALL BE INSTALLED PARALLEL TO THE BEAMS AND WALLS.

3. PROVIDE ALL REQUIRED PULL BOXES AND JUNCTION BOXES FOR INSTALLATION OF THE WIRING IN ACCORDANCE WITH THE CONTRACT SPECIFICATIONS THOUGH THE BOXES MAY NOT BE INDICATED ON THE DRAWINGS.

4. THE WIRING DIAGRAMS, QUANTITY AND SIZE OF WIRES AND CONDUITS ARE BASED UPON SELECTED STANDARD COMPONENTS OF ELECTRICAL EQUIPMENT. MODIFICATIONS, APPROVED BY THE ENGINEER, MAY BE MADE BY THE CONTRACTOR AT HIS EXPENSE TO ACCOMMODATE EQUIPMENT ACTUALLY PURCHASED.

5. PROVIDE ALL NECESSARY COMPONENTS REQUIRED FOR MAKING FINAL CONNECTION OF ALL EQUIPMENT INSTALLED AS PART OF THIS CONTRACT.

6. ALL INDICATION AND CONTROL WIRING SHALL BE WIRED TO NUMBERED TERMINAL STRIPS AND IDENTIFIED AS TO START AND END OF RUN.

7. ALL ELECTRICAL EQUIPMENT INSTALLED AGAINST CONCRETE OR MASONRY WALLS SHALL BE INSTALLED WITH IN A 1/4" SPACE BETWEEN THE EQUIPMENT AND THE MOUNTING SURFACE. SPACERS SHALL BE STAINLESS STEEL, PVC OR NYLON.

8. ALL JUNCTION AND PULL BOXES SHALL BE LABELED WITH THEIR VOLTAGE AND USAGE.

9. DRAWINGS ARE DIAGRAMMATIC, ACTUAL LOCATION OF EQUIPMENT TO BE DETERMINED IN THE FIELD. NEW EQUIPMENT SHALL FIT INTO AVAILABLE SPACE. IT IS THE RESPONSIBILITY OF THE CONTRACTOR TO PROVIDE EQUIPMENT WHICH MEETS THE SPACE REQUIREMENT.

10. COORDINATE WORK SCHEDULE WITH OWNER. WORK WILL BE ALLOWED IN CERTAIN AREAS AND GOVERNED BY EXISTING SECURITY REGULATIONS AT THE FACILITY. WORK SHALL ALLOW FOR DAILY OPERATION OF THE FACILITY WITHOUT INTERRUPTION.

11. CONTRACTOR SHALL SUBMIT A LIST OF ALL MAJOR EQUIPMENT AND FIXTURES TO THE ENGINEER FOR REVIEW AND APPROVAL. NO SUBSTITUTIONS WILL BE ALLOWED WITHOUT THE PERMISSION OF THE ENGINEER IN WRITING. ALL EQUIPMENT SHALL BE NEW AND BEAR THE MANUFACTURER'S NAME AND TRADE NAME. ALL EQUIPMENT SHALL BE UL LISTED. ALL CONDUITS IN FINISHED AREAS SHALL RUN CONCEALED UNLESS OTHERWISE NOTED.

12. THE CIRCUIT NUMBERS ARE FOR IDENTIFICATION PURPOSE ONLY. THE CONTRACTOR IS RESPONSIBLE FOR BALANCING LOADS AND CORRECTLY PHASING THE CIRCUITS IN PANELBOARD.

13. COMMON NEUTRALS SHALL NOT BE USED.

14. ELECTRICAL REQUIREMENTS FOR MECHANICAL EQUIPMENT ARE BASED ON EQUIPMENT SPECIFIED. COORDINATE EXACT REQUIREMENTS WITH MECHANICAL SHOP DRAWINGS PRIOR TO ORDERING AND INSTALLING EQUIPMENT. ALL 120 VOLT RECEPTACLE BRANCH CIRCUITS LONGER THAN 100 FEET FROM PANELBOARD TO LAST OUTLET SHALL UTILIZE #10AWG OR LARGER WIRES.

15. CONTRACTOR SHALL VERIFY ALL DOOR SWINGS BEFORE SETTING SWITCHES. INSTALL SWITCHES ON THE LOCK SIDE OF DOORS 4 FEET AFF, UNLESS OTHERWISE NOTED.

16. WHERE ELECTRICAL INSTALLATIONS DEPEND UPON WORK OF OTHER TRADES, THE ELECTRICAL CONTRACTOR SHALL ENSURE THAT NECESSARY INSTRUCTIONS, TEMPLATES, MATERIALS, ETC. ARE PROVIDED AND SUPERVISE THE WORK OF THE OTHER TRADES FOR QUALITY AND CODE COMPLIANCE.

17. CONTRACTOR SHALL VISIT THE JOB SITE AND EXAMINE THE EXISTING CONDITIONS THAT MAY AFFECT HIS WORK.

18. CONTRACTOR SHALL OBTAIN A WRITTEN PERMISSION FROM THE OWNER TO DEENERGIZE ANY ENERGIZED BUILDING EQUIPMENT OR DISRUPT ANY COMMUNICATION LINE.

19. OPENINGS AND PASSAGE OF CONDUITS OR WIREWAYS THROUGH FLOOR SLABS AND FIRE RATED WALLS OR PARTITIONS SHALL BE PROVIDED WITH UL LISTED FIRE RATED SLEEVING SYSTEM.

20. DO NOT INSTALL MORE THAN THREE SINGLE PHASE CIRCUITS IN ONE HOMERUN UON.

21. NUMBER ADJACENT TO LIGHT, RECEPTACLE OR OTHER DEVICES INDICATE PANEL SERVING THE DEVICE OR EQUIPMENT AND CIRCUIT NUMBER. PROVIDE COMPLETE WIRING IN CONDUIT.

22. SERIES RATING OF CIRCUIT BREAKERS SHALL NOT BE ALLOWED.

23. ALL VFDS SHALL BE FURNISHED UNDER DIVISION 15 UNLESS OTHERWISE NOTED.

24. ALL WORK SHOWN ON THE DRAWINGS SHALL BE NEW UNLESS OTHERWISE NOTED.

25. THE EXISTING FACILITY SHALL BE KEPT OPERATIONAL DURING CONSTRUCTION. THE NEW ELECTRICAL SYSTEM SHALL BE INSTALLED IN PHASES SUCH THAT THE EXISTING SYSTEM REMAINS IN PLACE UNTIL THE NEW SYSTEM HAS BEEN INSTALLED. PROVIDE TEMPORARY POWER TO KEEP

26. EXISTING SYSTEM SHALL REMAIN OPERATIONAL DURING POWER OUTAGE. OBTAIN TEMPORARY POWER FROM UTILITY OR PORTABLE GENERATOR. ALL ASSOCIATED COST SHALL BE BORNE BY THE CONTRACTOR.

27. PROVIDE PULL STRINGS IN ALL EMPTY CONDUIT TO FACILITATE PULLING OF CABLES IN FUTURE.

28. ALL RECEPTACLES AND SWITCHES INDICATED AS FREE STANDING SHALL BE INSTALLED ON CHANNELS. ALL RECEPTACLES LOCATED IN MECHANICAL RM, ELECTRICAL RM, JANITOR'S CLOSET, BATH ROOMS AND WITHIN 6' OF KITCHEN SINK SHALL BE GFI TYPE UON.

29. GROUNDING: ELECTRICAL SYSTEMS SHALL BE GROUNDED AS SPECIFIED AND SHOWN ON THE CONTRACT DRAWINGS. WORK SHALL ALSO BE PERFORMED IN ACCORDANCE WITH ARTICLE 250 OF THE MOST RECENT REVISION OF THE NATIONAL ELECTRIC CODE. REFER TO DETAILS FOR GROUNDING SCHEMATICS AND FOR GENERAL GROUNDING REQUIREMENTS OF ELECTRICAL EQUIPMENT. GROUND GRID CONNECTIONS SHOWN ON THE INDIVIDUAL PLANS ARE MINIMUM REQUIREMENTS. ALL REQUIRED CONNECTIONS ARE NOT SHOWN ON PLANS FOR BREVITY. CONTRACTOR SHALL COORDINATE NEW CONNECTIONS TO THE EXISTING GROUND GRIDS AS NECESSARY.

ABBREVIATIONS

A	AMPERES
AC	ALTERNATING CURRENT
AFF	ABOVE FINISHED FLOOR
AFG	ABOVE FINISHED GRADE
AHU	AIR HANDLING UNIT
AIC	AMPERES INTERRUPTING CAPACITY, (SYM, RMS AMPS)
AL	ALUMINUM
ANNUN	ANNUNCIATOR
AS	AMMETER SWITCH
ATC	AUTOMATIC TEMPERATURE CONTROL
ATS	AUTOMATIC TRANSFER SWITCH
AUTO	AUTOMATIC
AUX	AUXILIARY
AWG	AMERICAN WIRE GAUGE
BCSD	BARE COPPER SOFT DRAWN
BFC	BELOW FINISHED CEILING
BFI	BLOWN FUSE INDICATOR
BFG	BELOW FINISHED GRADE
BLDG	BUILDING
BKR	BREAKER
C	CONDUIT
CB	CIRCUIT BREAKER
CC1	POWER/CONTROL/INSTRUMENTATION CABLE RUN NUMBER AS INDICATED.
CKT	CIRCUIT
COMB	COMBINATION
CLG	CEILING
CP	CONTROL PANEL
CPT	CONTROL POWER TRANSFORMER
CT	CURRENT TRANSFORMER
CU	COPPER
CX	CONNECT TO EXISTING
CCTV	CLOSED CIRCUIT TELEVISION
DAS	DATA ACQUISITION SYSTEM
DC	DIRECT CURRENT
DEC	DELAWARE ELECTRICAL COOPERATIVE UTILITY COMPANY
DISC	DISCONNECT
DN	DOWN
DP	DISTRIBUTION PANEL
DPC	DISTRIBUTED PROCESS CONTROLLER
DWG	DRAWING
EA	EACH
EC	EMPTY CONDUIT
ECD	ELEMENTARY CONTROL DIAGRAM
EF	EXHAUST FAN
EH	ELECTRIC HEATER
ELEV	ELEVATION
EMERG.	EMERGENCY
EMH	ELECTRIC MANHOLE
EMT	ELECTRIC METALLIC TUBING
ENCL	ENCLOSURE
E/O	ELECTRICALLY/OPERATED
EQUIP	EQUIPMENT
ETM	ELAPSED TIME METER
ETR	EXISTING TO REMAIN
EUH	ELECTRIC UNIT HEATER
EWC	ELECTRIC WATER COOLER
EWH	ELECTRIC WATER HEATER
EX, EXIST	EXISTING
EXP	EXPLOSION PROOF
F	FUSE
FA	FRAME AMPS
FA	FIRE ALARM
FAAP	FIRE ALARM ANNUNCIATOR PANEL
FACP	FIRE ALARM CONTROL PANEL
FC	FAN COIL UNIT
FDR	FEEDER
FL	FLOOR
FLEX	FLEXIBLE
FMC	FLEXIBLE METAL CONDUIT
FS	FLOW SWITCH
FSS	FUSED SAFETY SWITCH
FT	FOOT OR FEET
FVNR	FULL VOLTAGE NON-REVERSING
FVR	FULL VOLTAGE REVERSING
G	GROUND
GFI	GROUND FAULT INTERRUPTER
HID	HIGH INTENSITY DISCHARGE
HH	HANDHOLE
HOA	HAND OFF AUTOMATIC
HP	HORSEPOWER
HPS	HIGH PRESSURE SODIUM
HTR	HEATER
HV	HIGH VOLTAGE
HZ	HERTZ
ICCB	INSULATED CASE CIRCUIT BREAKER
IDS	INTRUSION DETECTION SYSTEM
IMC	INTERMEDIATE METALLIC CONDUIT
JB	JUNCTION BOX
KAIC	THOUSAND AMPERES INTERRUPTING CAPACITY
KV	KILOVOLT
KVA	KILOVOLT AMPERE
LI	LONG, INSTANTANEOUS
LTG	LIGHTING
LO	LOCKOUT
LP	LIGHTING AND APPLIANCE PANEL
LSIG	LONG TIME, SHORT TIME, INSTANTANEOUS, GROUND FAULT
MAFC	MAKE ALL FINAL CONNECTIONS
M/C	MULTI/CONDUCTOR
MCB	MAIN CIRCUIT BREAKER
MCCB	MOLDED CASE CIRCUIT BREAKER
MCC	MOTOR CONTROL CENTER
MCP	MOTOR CIRCUIT PROTECTOR
MH	MOUNTING HEIGHT
MIN	MINIMUM
MLO	MAIN LUGS ONLY
MOD	MOTOR OPERATED DAMPER
MO	METAL OXIDE
MSCP	MOTOR STARTER CONTROL PANEL
MTD	MOUNTED
MTG	MOUNTING
N	NEUTRAL
NEC	NATIONAL ELECTRICAL CODE
NEMA	NATIONAL ELECTRICAL MANUFACTURER'S ASSOCIATION
NFSS	NON FUSED SAFETY SWITCH
NO	NORMALLY OPEN
NO	NUMBER
NC	NORMALLY CLOSED
NIC	NOT IN CONTRACT
NL	NIGHT LIGHT
NTS	NOT TO SCALE
OL	OVERLOAD
P	POLE OR POLES
PB	PUSH BUTTON
PH	PHASE
PL	PILOT LIGHT
PLC	PROGRAMMABLE LOGIC CONTROLLER
PNL	PANELBOARD
PS	PRESSURE SWITCH
PSH	PRESSURE SWITCH HIGH
PT	POTENTIAL TRANSFORMER
PVC	POLYVINYL CHLORIDE
RC	REMOTE CONTROL
RECEPT	RECEPTACLE
REQ'D	REQUIRED
RGS	RIGID GALVANIZED STEEL
RM	ROOM
RMS	ROOT MEAN SQUARE
RTD	RESISTANCE TEMPERATURE DETECTOR
RTU	REMOTE TERMINAL UNIT
RVAT	REDUCED VOLTAGE AUTOTRANSFORMER
RX	REMOVE EXISTING
SER.	SERVICE
SF	SUPPLY FAN
SG1-1A/P	SWGR POWER WIRE RUN NUMBER - SWGR NUMBER AND UNIT NUMBER AS INDICATED
SIC	SYMMETRICAL INTERRUPTING CURRENT
SOPN	SPACE OR POLE NUMBER
SPPS	SOUND POWERED PHONE SYSTEM
SS	STAINLESS STEEL
SS	SAFETY SWITCH
ST	SHUNT TRIP
STA	STATION
STP	SHIELDED TWISTED PAIR
STPS	SHIELDED TWISTED PAIR OVER ALL SHIELD
STR	STARTER
STT	SHIELDED TWISTED TRIPLE
S/N	SOLID NEUTRAL
SW	SWITCH
SWBD	SWITCHBOARD
SWGR	SWITCHGEAR
SYM	SYMMETRICAL
SYS	SYSTEM
TA	TRIP AMPS
TC	TIME CLOCK
TDD	TIME DELAY DE-ENERGIZED (OFF)
TDE	TIME DELAY ENERGIZED (ON)
TDC	TIME DELAY CLOSE
TDO	TIME DELAY OPEN
TMH	TELEPHONE MANHOLE
TP	TWISTED PAIR
TPS	TWISTED PAIR SHIELDED
TST	THERMOSTAT SWITCH IN AUTO-TRANSFORMER STARTER
TTB/TTC	TELEPHONE TERMINAL BOARD/CABINET
TYP	TYPICAL
UH	UNIT HEATER
UG	UNDERGROUND
UON	UNLESS OTHERWISE NOTED
UPS	UNINTERRUPTIBLE POWER SUPPLY
V	VOLTS OR VOLTAGE
VFD	VARIABLE FREQUENCY DRIVE
W	WATTS
W	WIRE
W/	WITH
WP	WEATHERPROOF
XFMR	TRANSFORMER
℄	CENTER LINE
ø	PHASE
@	AT
#	NUMBER

REVISIONS

CLIENT INFORMATION

SUSSEX COUNTY, DE
ENGINEERING
DEPARTMENT

INLAND BAYS RWF
PHASE #2 EXPANSION:
CONTRACT S19-10

KEY PLAN

GRAPHIC SCALES

SIGNATURE

IL HWAN KIM
LICENSE
No. 19294
DELAWARE
PROFESSIONAL ENGINEER
12-14-18

Whitman, Requardt & Associates, LLP
801 South Caroline Street, Baltimore, Maryland 21231

ELECTRICAL GENERAL NOTES AND ABBREVIATIONS

DRAWING NO.

E00.02

SCALE: NONE		
DATE: DEC. 2018	SHEET 134 OF 217	
DES: JPS	DRAWN: KK	CHECK: IHK

PLOT DATE: 12/14/2018 2:53:42 PM PAGE SETUP: WRA-PDF C36X24) PLOT STYLE: WRA_2006.CTB PAPER SIZE:ARCH FULL BLEED D (36.00 X 24.00 INCHES)
N:\14256-005\CADD\14256002E00-002.dwg

GENERAL SHEET NOTES

1. SEE DRAWINGS E00.01 AND E00.02 FOR ELECTRICAL LEGEND, ABBREVIATIONS AND GENERAL NOTES.
2. NOT IN CONTRACT (NIC) SITE WORK INDICATED FOR REFERENCE. NIC WORK CONSTRUCTION WAS IN PROGRESS DURING DEVELOPMENT CONTRACT DRAWINGS OF THIS PROJECT.
3. ALL NEW ELECTRICAL SITE WORK IS SHOWN IN BOLD LINE WEIGHT. SEE DRAWINGS E00.03A, E00.04 AND E00.05 FOR SPECIFIC ELECTRICAL SITE PLAN GENERAL NOTES AND ELECTRICAL REQUIREMENTS.

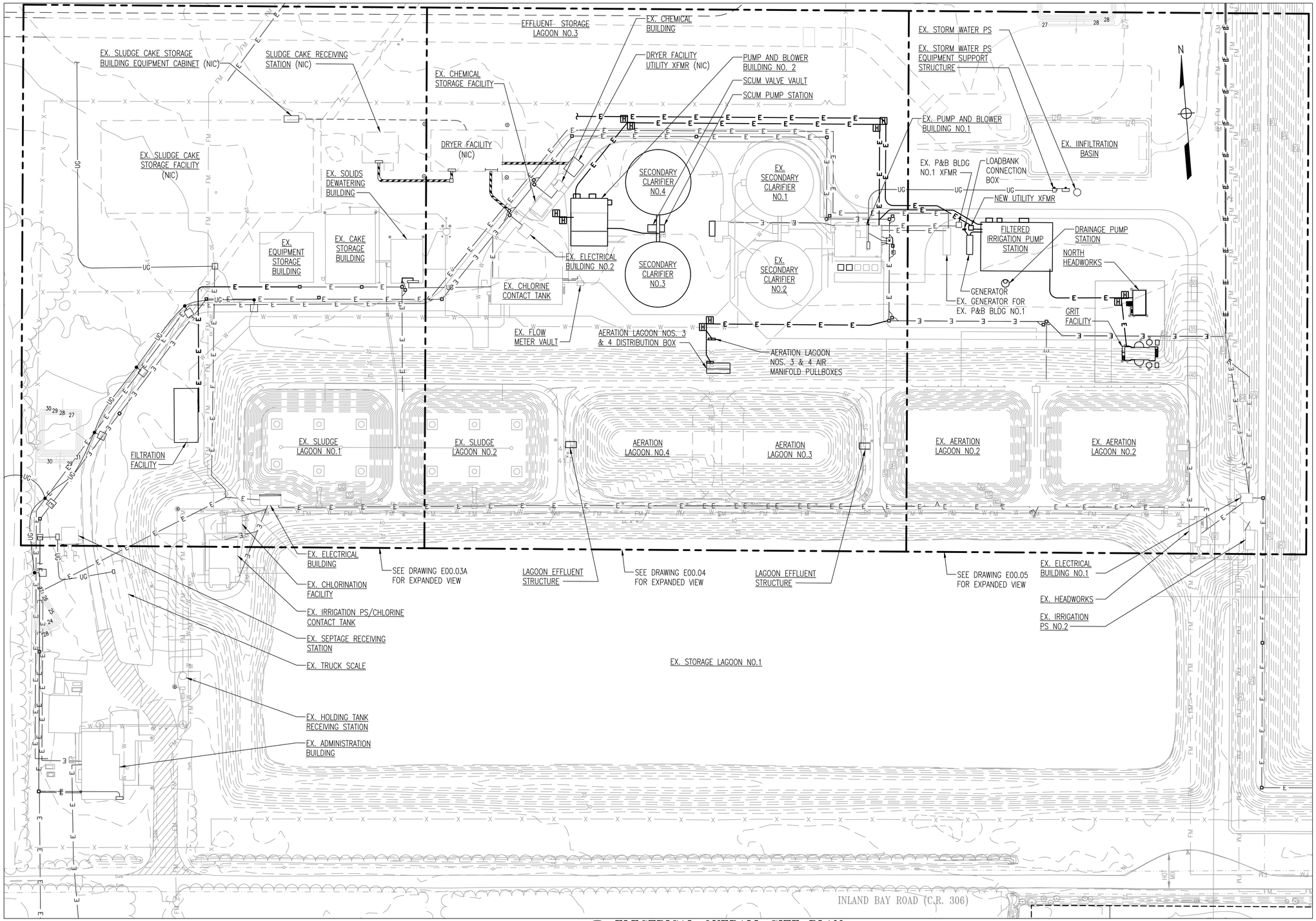

1 E00.03 ELECTRICAL OVERALL SITE PLAN
SCALE: 1" = 60'

N:\14256-028\CADD\14256028E00-03.dwg

REVISIONS		

CLIENT INFORMATION

SUSSEX COUNTY, DE
ENGINEERING
DEPARTMENT

INLAND BAYS RWF
PHASE #2 EXPANSION:
CONTRACT S19-10

KEY PLAN

GRAPHIC SCALES

0 30' 60' 120'
SCALE: 1" = 60'

SIGNATURE

IL IHKAN KIM
LICENSE
No. 19204
DELAWARE
PROFESSIONAL ENGINEER
7-10-19

Whitman, Requardt & Associates, LLP
801 South Caroline Street, Baltimore, Maryland 21231

ELECTRICAL
OVERALL SITE PLAN

DRAWING NO.

E00.03

SCALE: AS SHOWN		
DATE: JULY 2019		SHEET 135 OF 229
DES: JPS	DRAWN: KK	CHECK: IHK

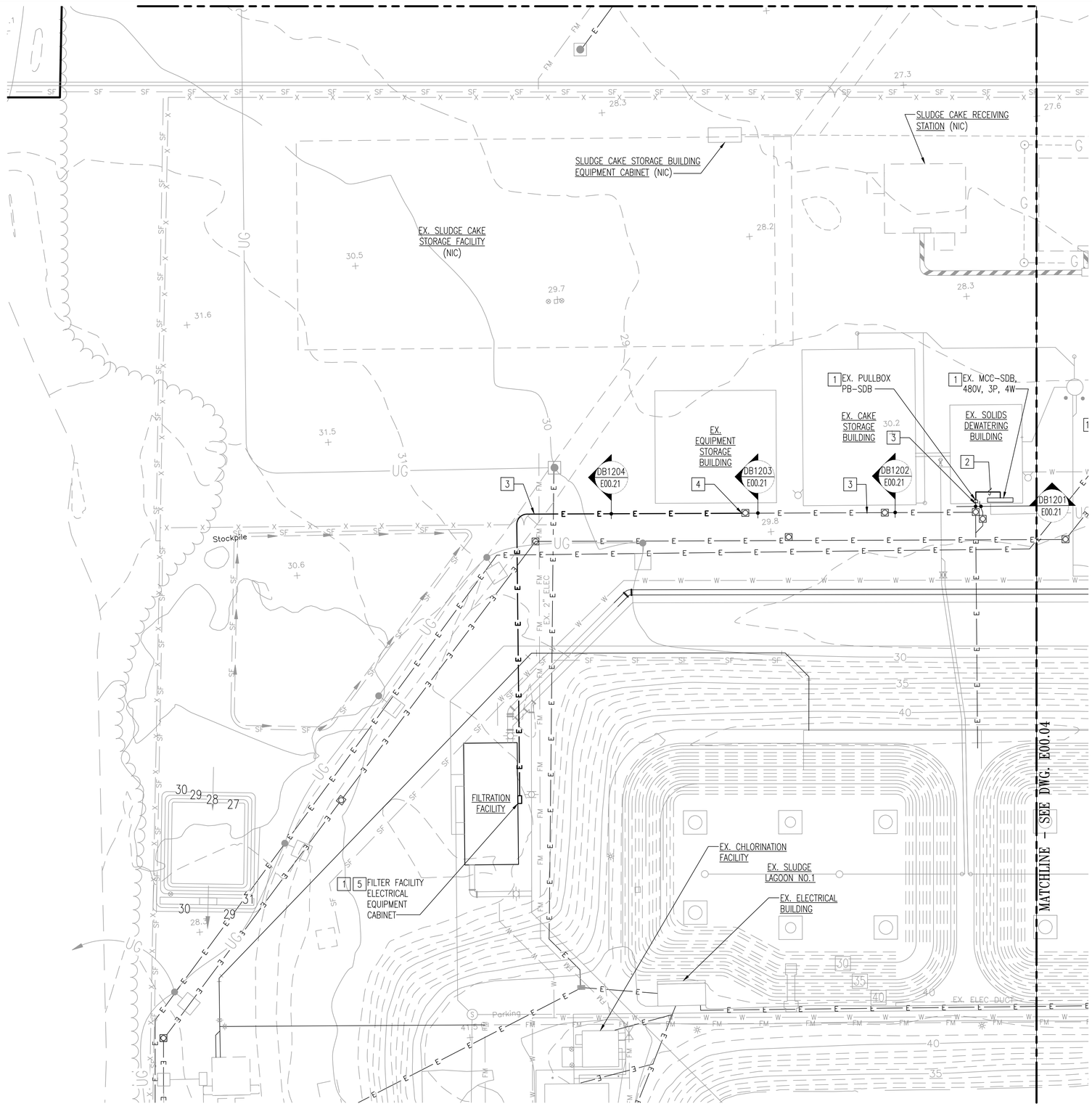

1 ELECTRICAL SITE PLAN - PART A
E00.03A SCALE: 1" = 30'

GENERAL SHEET NOTES

1. SEE DRAWINGS E00.01 AND E00.02 FOR ELECTRICAL LEGEND, ABBREVIATIONS AND GENERAL NOTES.
2. SEE DRAWING E00.03 FOR OVERALL ELECTRICAL SITE PLAN.
3. SEE CIVIL DRAWINGS FOR ADDITIONAL UTILITIES NOT SHOWN ON THE ELECTRICAL SITE PLAN. ALL ELECTRICAL SITE WORK SHALL BE COORDINATED WITH THE CIVIL DRAWINGS.
4. CONTRACTOR TO VERIFY EXISTING SITE CONDITIONS IN AREAS OF NEW WORK PRIOR TO PERFORMING ANY NEW WORK.
5. NEW WORK IS SHOWN IN BOLD LINE WEIGHT OR AS INDICATED.
6. SEE INSTRUMENTATION AND CONTROL DRAWINGS AND SPECIFICATIONS FOR ADDITIONAL DETAILS AND REQUIREMENTS.
7. COORDINATE DEPTH AND ROUTING OF DUCTBANKS WITH EXISTING/NEW SITE CONDITIONS AND BELOW GRADE UTILITIES. ADJUST DEPTH TO ACCOMMODATE GRADING AND ABRUPT ELEVATION CHANGES ASSOCIATED WITH DRAINAGE PONDS/DITCHES. WHERE DUCTBANKS CROSS EXISTING/NEW BELOW GRADE UTILITIES, INCREASE THE DEPTH OF THE DUCT BANK AS REQUIRED TO COORDINATE THE INSTALLATION.

SPECIFIC NOTES

1. FILTRATION FACILITY POWER SHALL BE PROVIDED FROM EXISTING MOTOR CONTROL CENTER MCC-SDB IN EXISTING SOLIDS DEWATERING BUILDING. EXISTING 200A CIRCUIT BREAKER IN MCC-SDB CUBICLE 2A SHALL BE USED FOR FEEDER TO PANEL PPFF LOCATED IN ELECTRICAL EQUIPMENT CABINET AT THE FILTRATION FACILITY. ROUTE PANEL FEEDER CONDUCTORS IN CONDUIT INSIDE EXISTING BUILDING FROM MCC-SDB TO EXISTING PULL BOX PB-SDB AND IN DUCTBANKS FROM SOLIDS DEWATERING BUILDING TO FILTRATION FACILITY.
2. FILTRATION FACILITY PANEL PPFF FEEDER, PROVIDE 4#3/0, 1#6G IN 2" INSIDE EXISTING BUILDING. EXTEND FEEDER CONDUCTORS IN UNDERGROUND RACEWAY SYSTEM FROM BUILDING TO FILTRATION FACILITY ELECTRICAL CABINET.
3. FILTRATION FACILITY PANEL PPFF FEEDER, ROUTE 4#3/0, 1#6G IN CONCRETE ENCASED DUCTBANK FROM EXISTING SOLIDS DEWATERING BUILDING NO.1 FOR ELECTRICAL SERVICE TO FILTRATION FACILITY.
4. CORE DRILL EXISTING HANDHOLE FOR INSTALLATION OF NEW CONDUITS FROM NEW DUCTBANK. REFER TO DUCTBANK SECTION FOR CONDUIT SIZES AND QUANTITY.
5. REFER TO DRAWING E12.01 FOR CONTINUATION OF DUCTBANKS TO FILTRATION FACILITY ELECTRICAL EQUIPMENT CABINET.

REVISIONS

CLIENT INFORMATION

SUSSEX COUNTY, DE
ENGINEERING
DEPARTMENT

INLAND BAYS RWF
PHASE #2 EXPANSION:
CONTRACT S19-10

KEY PLAN

GRAPHIC SCALES

0 15' 30' 60'
SCALE: 1" = 30'

SIGNATURE

IL HWAN KIM
LICENSE
No. 19294
DELAWARE
PROFESSIONAL ENGINEER
7-10-19

Whitman, Requardt & Associates, LLP
801 South Caroline Street, Baltimore, Maryland 21231

ELECTRICAL SITE PLAN - PART A

DRAWING NO.

E00.03A

SCALE: AS SHOWN		
DATE: JULY 2019	SHEET 136 OF 229	
DES: JPS	DRAWN: SMC	CHECK: IHK

N:\14256-028\CADD\1425602BD0-03A.dwg

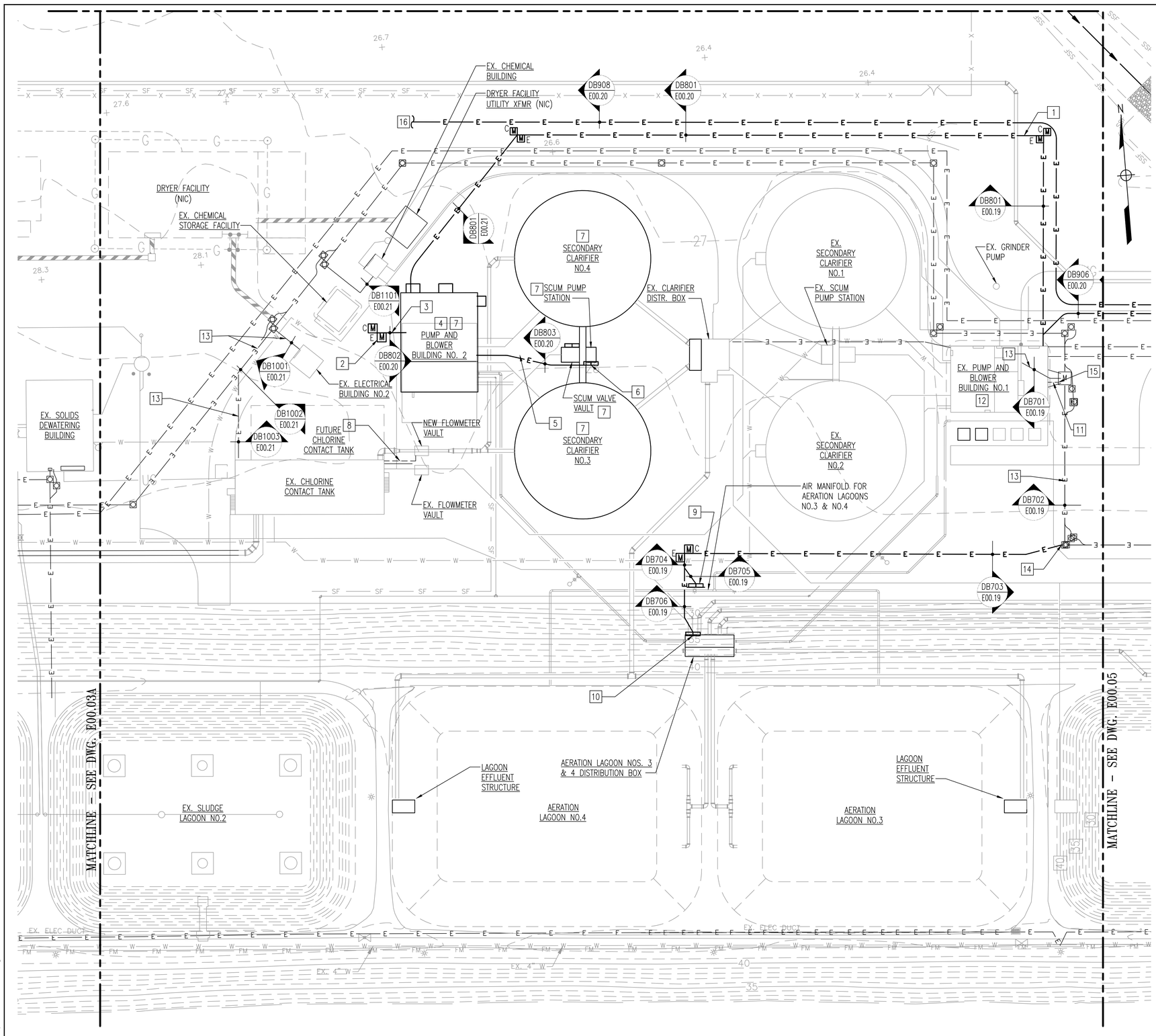

1 E00.04/ ELECTRICAL SITE PLAN - PART B
SCALE: 1" = 30'

GENERAL SHEET NOTES

1. SEE DRAWINGS E00.01 AND E00.02 FOR ELECTRICAL LEGEND, ABBREVIATIONS AND GENERAL NOTES.
2. SEE DRAWING E00.03 FOR OVERALL ELECTRICAL SITE PLAN.
3. SEE CIVIL DRAWINGS FOR ADDITIONAL UTILITIES NOT SHOWN ON THE ELECTRICAL SITE PLAN. ALL ELECTRICAL SITE WORK SHALL BE COORDINATED WITH THE CIVIL DRAWINGS.
4. CONTRACTOR TO VERIFY EXISTING SITE CONDITIONS IN AREAS OF NEW WORK PRIOR TO PERFORMING ANY NEW WORK.
5. NEW WORK IS SHOWN IN BOLD LINE WEIGHT OR AS INDICATED.
6. SEE INSTRUMENTATION AND CONTROL DRAWINGS AND SPECIFICATIONS FOR ADDITIONAL DETAILS AND REQUIREMENTS.
7. SEE ONE LINE DIAGRAMS ON DRAWING E00.06 FOR ALL DB7XX AND DB10XX SERIES DUCTBANKS FOR FEEDER REQUIREMENTS.
8. SEE ONE LINE DIAGRAM ON DRAWING E00.08 FOR ALL DB8XX SERIES DUCTBANKS FOR FEEDER REQUIREMENTS.
9. COORDINATE DEPTH AND ROUTING OF DUCTBANKS WITH EXISTING/NEW SITE CONDITIONS AND BELOW GRADE UTILITIES. ADJUST DEPTH TO ACCOMMODATE GRADING AND ABRUPT ELEVATION CHANGES ASSOCIATED WITH DRAINAGE PONDS/DITCHES. WHERE DUCTBANKS CROSS EXISTING/NEW BELOW GRADE UTILITIES, INCREASE THE DEPTH OF THE DUCT BANK AS REQUIRED TO COORDINATE THE INSTALLATION.

SPECIFIC NOTES

1. CONCRETE ENCASED DUCTBANK FROM EXISTING PUMP AND BLOWER BUILDING NO.1 FOR ELECTRICAL SERVICE TO PUMP AND BLOWER BUILDING NO.2.
2. FOR FUTURE EXTENSION OF POWER AND CONTROL TO FUTURE AERATION LAGOONS.
3. DUCTBANK FOR FUTURE POWER AND CONTROL TO FUTURE AERATION LAGOONS.
4. REFER TO DRAWING E08.01 FOR CONTINUATION OF DUCTBANKS INTO BUILDING.
5. DUCTBANK FOR POWER AND CONTROL TO NEW CLARIFIERS.
6. FACILITY POWER PULLBOX AND CONTROL PULLBOX FOR FACILITY, REFER TO DRAWING E06.01 FOR CONTINUATION.
7. SEE PUMP AND BLOWER BUILDING NO. 2 ONE LINE DIAGRAM ON DRAWING E00.08 FOR FEEDER REQUIREMENTS FOR FACILITY.
8. DIRECT BURIED POWER AND CONTROL CONDUITS FROM EXISTING ELECTRICAL BUILDING NO.2 TO SERVE NEW EQUIPMENT AT EXISTING CHLORINE CONTACT TANK AND NEW FLOWMETER VAULT.
9. FACILITY POWER PULLBOX AND CONTROL PULLBOX FOR AERATION AIR MANIFOLD EQUIPMENT, REFER TO DRAWING E04.01 FOR CONTINUATION.
10. FACILITY POWER PULLBOX AND CONTROL PULLBOX FOR AERATION DISTRIBUTION BOX AND AERATION LAGOONS NO.3 & NO.4 EQUIPMENT, REFER TO DRAWING E03.01 FOR CONTINUATION.
11. (2)-2" CONDUIT FOR INSTRUMENTATION AND (1)-2" FOR POWER DIRECT BURIED CONDUIT ROUTED ABOVE EXISTING DUCTBANK TO EXISTING MANHOLE FOR NEW AERATION DISTRIBUTION BOX SUBMERSIBLE MIXERS CONTROL PANEL AND MINI POWER-ZONE PANEL LPAB CONDUCTORS. CORE DRILL MANHOLE FOR INSTALLATION OF NEW CONDUIT. REFER TO PARTIAL SINGLE LINE DIAGRAM 3/E00.06 FOR CONDUCTOR REQUIREMENTS.
12. FOR CONTINUATION OF NEW DUCBANK(S) AND/OR DIRECT BURIED CONDUIT(S) INSIDE BUILDING, SEE DRAWING E07.01.
13. PROVIDE NEW FEEDERS/CONDUCTORS IN EXISTING DUCTBANK AS INDICATED IN THE DUCTBANK SECTION.
14. CORE DRILL EXISTING HANDHOLE FOR INSTALLATION OF NEW CONDUITS FROM NEW DUCTBANK.
15. CORE DRILL EXISTING MANHOLE FOR INSTALLATION OF NEW CONDUIT, SEE DRAWING E07.01 FOR CONDUIT AND FEEDER REQUIREMENTS.
16. UTILITY TRANSFORMER PRIMARY FEEDER TO ROUTING TO BE DETERMINED BY BY UTILITY COMPANY. CONTRACTOR TO COORDINATE WITH UTILITY COMPANY AND PROVIDE PER UTILITY COMPANY REQUIREMENTS. DUCTBANK AND CONDUITS TO BE PROVIDE BY CONTRACTOR. PRIMARY FEEDERS TO BE PROVIDE BY UTILITY COMPANY.

REVISIONS		

CLIENT INFORMATION

SUSSEX COUNTY, DE
ENGINEERING
DEPARTMENT

INLAND BAYS RWF
PHASE #2 EXPANSION:
CONTRACT S19-10

KEY PLAN

GRAPHIC SCALES

0 15' 30' 60'
SCALE: 1" = 30'

SIGNATURE

IL HWAN KIM
LICENSE
No. 15204
DELAWARE
PROFESSIONAL ENGINEER
7-10-19

WRA
Whitman, Requardt & Associates, LLP
801 South Caroline Street, Baltimore, Maryland 21231

ELECTRICAL SITE PLAN - PART B

DRAWING NO.

E00.04

SCALE: AS SHOWN		
DATE: JULY 2019	SHEET 136 OF 229	
DES: JPS	DRAWN: SMC	CHECK: IHK

N:\14256-026\CADD\14256026B00-04.dwg

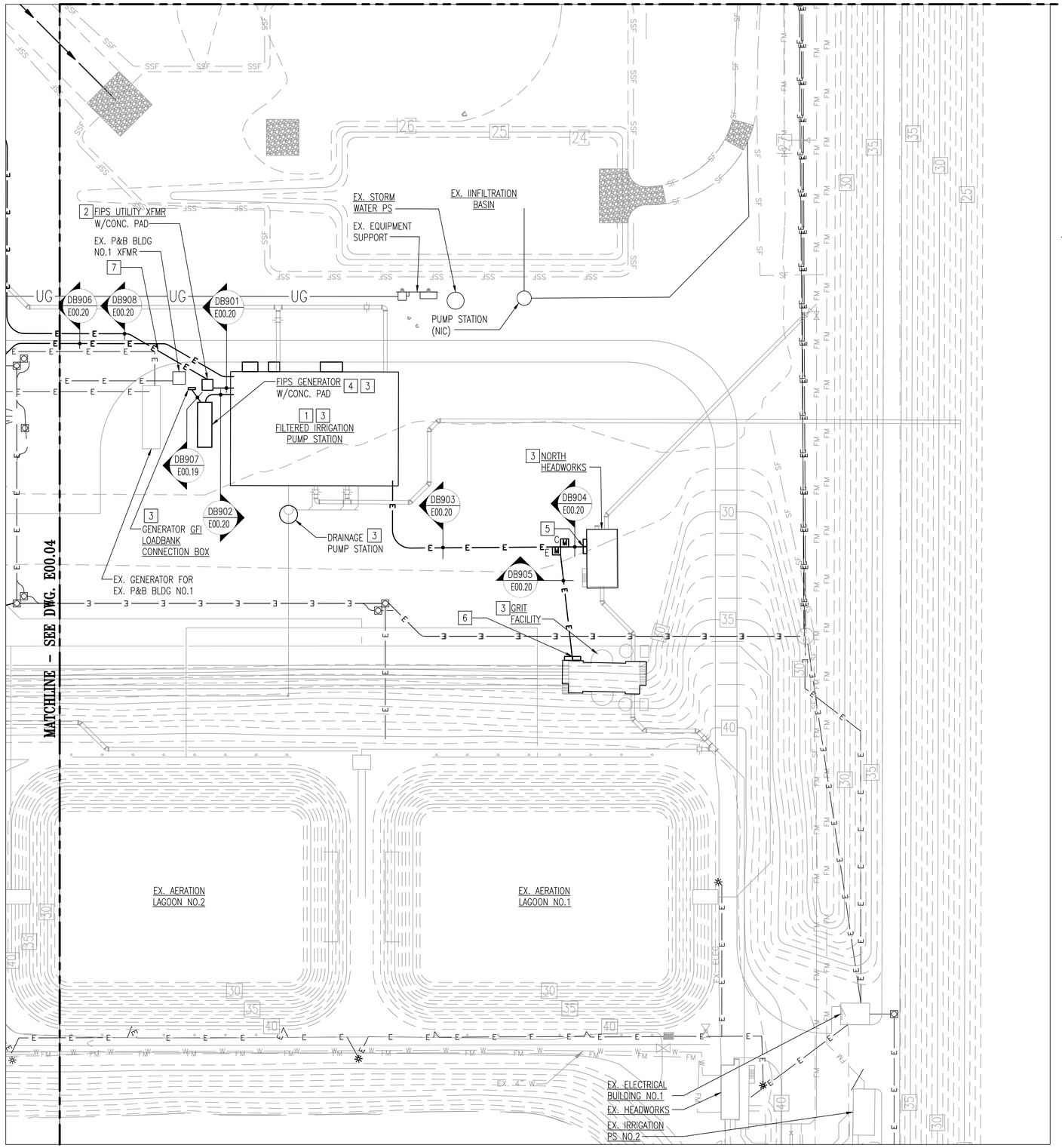

1 E00.05 ELECTRICAL SITE PLAN - PART C
SCALE: 1" = 30'

GENERAL SHEET NOTES

1. SEE DRAWINGS E00.01 AND E00.02 FOR ELECTRICAL LEGEND, ABBREVIATIONS AND GENERAL NOTES.
2. SEE DRAWING E00.03 FOR OVERALL ELECTRICAL SITE PLAN.
3. SEE CIVIL DRAWINGS FOR ADDITIONAL UTILITIES NOT SHOWN ON THE ELECTRICAL SITE PLAN. ALL ELECTRICAL SITE WORK SHALL BE COORDINATED WITH THE CIVIL DRAWINGS.
4. CONTRACTOR TO VERIFY EXISTING SITE CONDITIONS IN AREAS OF NEW WORK PRIOR TO PERFORM ANY NEW WORK.
5. NEW WORK IS SHOWN IN BOLD LINE WEIGHT OR AS INDICATED.
6. SEE INSTRUMENTATION AND CONTROL DRAWINGS AND SPECIFICATIONS FOR ADDITIONAL DETAILS AND REQUIREMENTS.
7. SEE ONE LINE DIAGRAM ON DRAWING E00.10 FOR ALL DB9XX AND DB9XX SERIES DUCTBANKS FOR FEEDER REQUIREMENTS.
8. COORDINATE DEPTH AND ROUTING OF DUCTBANKS WITH EXISTING/NEW SITE CONDITIONS AND BELOW GRADE UTILITIES. ADJUST DEPTH TO ACCOMMODATE GRADING AND ABRUPT ELEVATION CHANGES ASSOCIATED WITH DRAINAGE PONDS/DITCHES. WHERE DUCTBANKS CROSS EXISTING/NEW BELOW GRADE UTILITIES, INCREASE THE DEPTH OF THE DUCT BANK AS REQUIRED TO COORDINATE THE INSTALLATION.

SPECIFIC NOTES

1. SEE DRAWING E09.01 FOR CONTINUATION OF DUCTBANKS INTO BUILDING.
2. SEE DETAIL 1/E00.22 FOR TRANSFORMER PAD DETAIL. INSTALLATION SHALL BE COORDINATED WITH THE UTILITY COMPANY.
3. SEE FILTERED IRRIGATION PUMP STATION ONE LINE DIAGRAM ON DRAWING E00.10 FOR REQUIREMENTS.
4. SEE DETAIL 2/E00.16 FOR GENERATOR DETAIL.
5. FACILITY POWER PULLBOX AND CONTROL PULLBOX FOR FACILITY, SEE DRAWING E01.01 FOR CONTINUATION.
6. FACILITY POWER PULLBOX AND CONTROL PULLBOX FOR FACILITY, SEE DRAWING E02.01 FOR CONTINUATION.
7. UTILITY TRANSFORMER PRIMARY FEEDER TO ROUTING TO BE DETERMINED BY UTILITY COMPANY. CONTRACTOR TO COORDINATE WITH UTILITY COMPANY AND PROVIDE PER UTILITY COMPANY REQUIREMENTS. DUCTBANK AND CONDUITS TO BE PROVIDE BY CONTRACTOR. PRIMARY FEEDERS TO BE PROVIDE BY UTILITY COMPANY.

REVISIONS

CLIENT INFORMATION

SUSSEX COUNTY, DE
ENGINEERING
DEPARTMENT

INLAND BAYS RWF
PHASE #2 EXPANSION:
CONTRACT S19-10

KEY PLAN

GRAPHIC SCALES

0 15' 30' 60'
SCALE: 1" = 30'

SIGNATURE

IL IHKAN KIM
LICENSE
No. 19294
DELAWARE
PROFESSIONAL ENGINEER
7-10-19

Whitman, Requardt & Associates, LLP
801 South Caroline Street, Baltimore, Maryland 21231

ELECTRICAL SITE PLAN - PART C

DRAWING NO.

E00.05

SCALE: AS SHOWN		
DATE: JULY 2019	SHEET 137 OF 229	
DES: JPS	DRAWN: SMC	CHECK: IHK

N:\14256-028\CADD\14256028D00-05.dwg

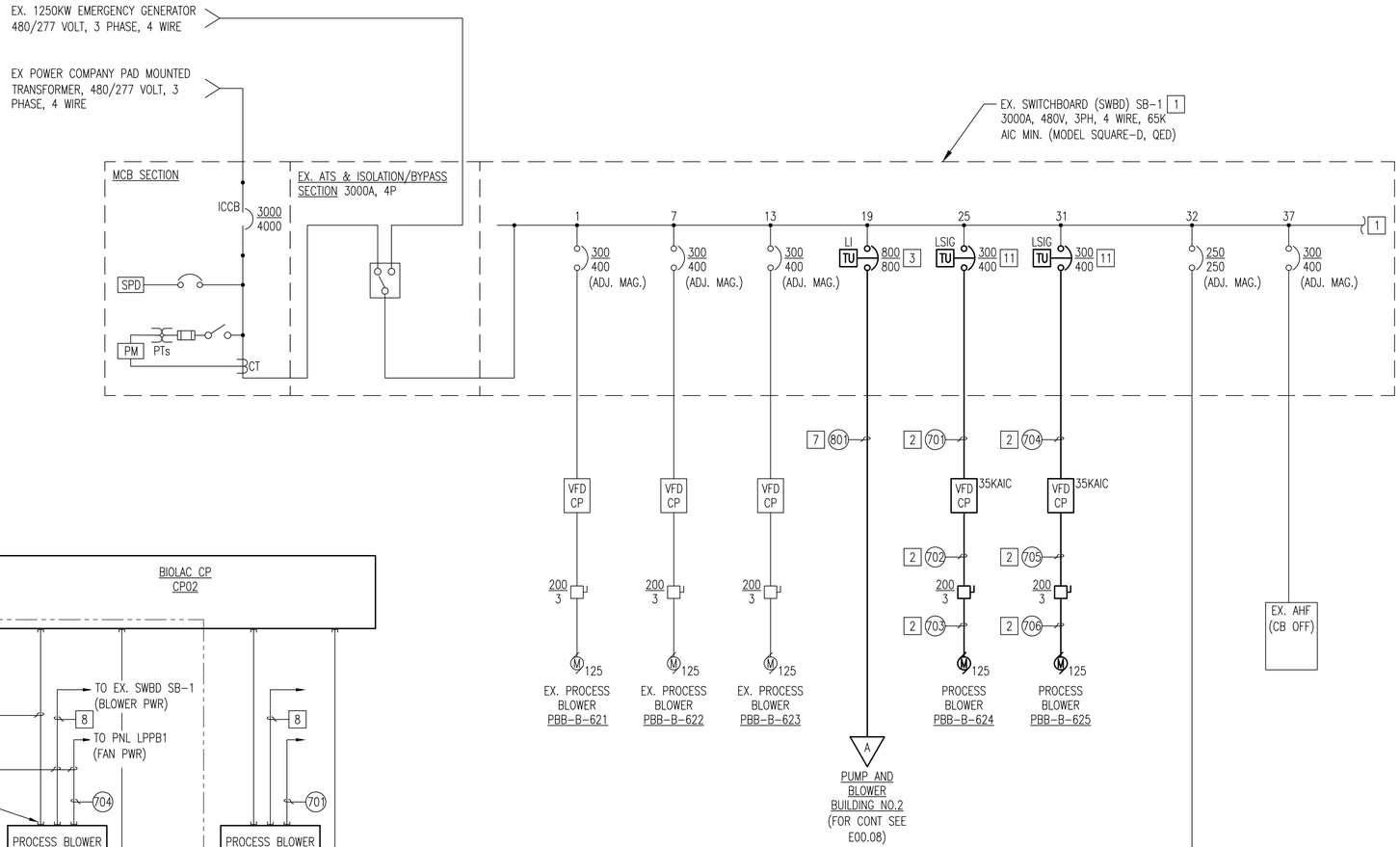

EXISTING PUMP AND BLOWER BUILDING NO.1 PARTIAL ONE LINE DIAGRAM

1 / E00.06 NOT TO SCALE

PROCESS BLOWER SYSTEM CONDUIT RISER DIAGRAM

2 / E00.06 NOT TO SCALE

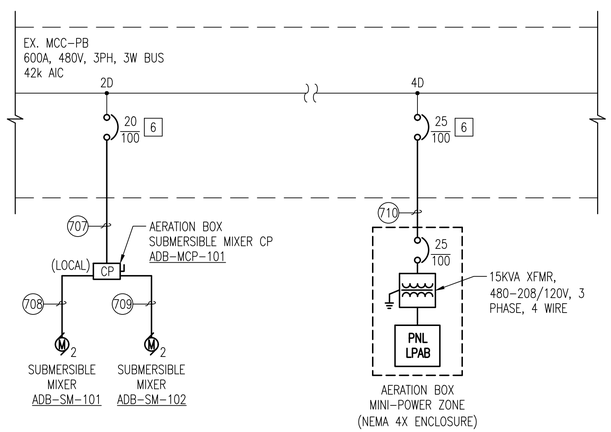

EXISTING PUMP AND BLOWER BUILDING NO.1 MCC-PB - PARTIAL ONE LINE DIAGRAM

3 / E00.06 NOT TO SCALE

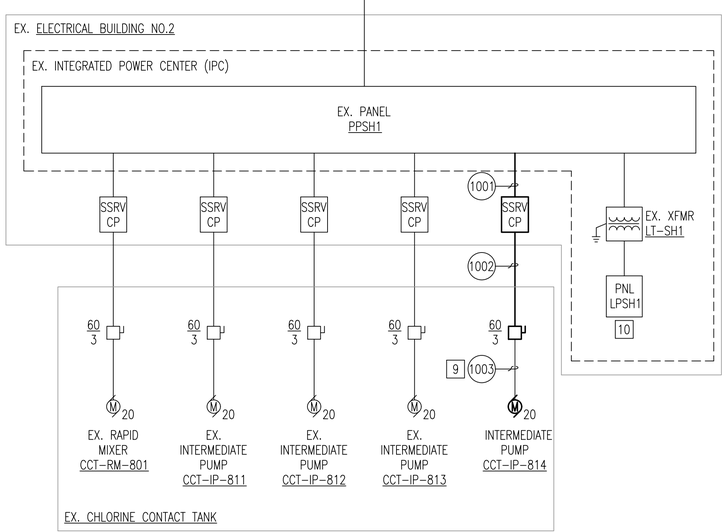

GENERAL SHEET NOTES

1. SEE DRAWING E00.01 FOR ELECTRICAL LEGEND.
2. SEE DRAWING E00.02 FOR GENERAL NOTES AND ABBREVIATIONS.
3. SEE DRAWING E00.07 FOR FEEDER SCHEDULE FOR THE NEW FEEDER REQUIREMENTS.
4. SEE DRAWING E00.13 FOR PANELS PPPB2, LPPB2, AND LPAB PANEL SCHEDULES.
5. SEE DRAWING E00.14 FOR PANELS PPSH1 AND LPSH1 PANEL SCHEDULES.
6. SEE INSTRUMENTATION AND CONTROL DRAWINGS AND SPECIFICATIONS FOR ADDITIONAL REQUIREMENTS.

SHEET KEY NOTES

1. ALL EXISTING FEEDERS AND CIRCUIT BREAKERS ARE NOT SHOWN FOR EXISTING SWITCHBOARD SB-1 FEEDER SECTION.
2. CONTRACTOR TO USE EXISTING SPARE CONDUIT. PROVIDE ADDITIONAL CONDUIT RACEWAYS PER THE FEEDER SCHEDULE AND DIAGRAM E00.07 TO COMPLETE CONNECTIONS.
3. REPLACE EXISTING 600AF ADJUSTABLE MAGNETIC CIRCUIT BREAKER (TYPE LC) WITH NEW ELECTRONIC TRIP 800AF/800AT (TYPE MJ). CIRCUIT BREAKER WITH AIC RATING TO MATCH EXISTING. NEW CIRCUIT BREAKER TO FEED NEW PUMP AND BLOWER BUILDING NO. 2. REPLACE EXISTING SPARE BREAKER LABEL FROM "FUTURE PUMP STATION" TO "PUMP AND BLOWER BUILDING NO.2".
4. PROVIDE NEW CONTROL WIRING IN EXISTING SPARE CONDUIT(S). SEE INSTRUMENTATION DRAWINGS FOR CONTROL WIRING AND CONDUIT REQUIREMENTS.
5. PROVIDE CONDUCTORS IN EXISTING SPARE CONDUITS. SEE DRAWING E07.01 FOR FEEDER AND BRANCH CIRCUIT DESIGNATION. PROVIDE CONDUCTORS AS INDICATED.
6. PROVIDE NEW CIRCUIT BREAKER AS INDICATED. NEW CIRCUIT BREAKER TO MATCH EXISTING CIRCUIT BREAKERS IN MCC-PB. REFER TO DRAWING E00.07 FOR EXISTING PUMP AND BLOWER BUILDING NO.1 MOTOR CONTROL CENTER MCC-PB ELEVATION FOR ADDITIONAL REQUIREMENTS.
7. REFER TO BLOWER BUILDING NO.2 ONE LINE DIAGRAM ON DRAWING E00.08 FOR FEEDER REQUIREMENTS.
8. PROVIDE 2 #12, 1 #12G IN 3/4"C. PROVIDE CONDUIT AS REQUIRED.
9. PROVIDE NEW CONDUCTOR IN EXISTING SPARE CONDUIT. PROVIDE ADDITIONAL CONDUIT AS NECESSARY FOR CONNECTION.
10. PROVIDE NEW BRANCH CIRCUITS FROM EXISTING PANEL AS INDICATED IN PANEL SCHEDULE. SEE DRAWING E10.01 FOR THE NEW CIRCUITS AT THE EXISTING CHLORINE CONTACT TANK AND NEW METERING VAULT. SEE DRAWING E11.01 FOR THE NEW CIRCUITS AT THE EXISTING CHEMICAL BUILDING.
11. REPLACE EXISTING 400AF ADJUSTABLE MAGNETIC CIRCUIT BREAKER (TYPE LC) WITH NEW ELECTRONIC TRIP 400AF/400AT (TYPE LJ).

REVISIONS

CLIENT INFORMATION

SUSSEX COUNTY, DE ENGINEERING DEPARTMENT

INLAND BAYS RWF PHASE #2 EXPANSION: CONTRACT S19-10

KEY PLAN

GRAPHIC SCALES

SIGNATURE

IL HWAN KIM LICENSE No. 19294 DELAWARE PROFESSIONAL ENGINEER
12-14-18

Whitman, Requardt & Associates, LLP
801 South Caroline Street, Baltimore, Maryland 21231

EX. PUMP & BLOWER BUILDING NO.1 ONE LINE DIAGRAM

DRAWING NO.

E00.06

SCALE: NONE		
DATE: DEC. 2018	SHEET 138 OF 217	
DES: JPS	DRAWN: SMC	CHECK: IHK

PLOT DATED: 12/14/2018 3:59:07 PM PAGE SETUP: WRA-PDF (36X24) PLOT STYLE: WRA_2006.CTB PAPER SIZE:ARCH FULL BLEED D (36.00 X 24.00 INCHES)
N:\14456-028\CADD\14456028E00-06.dwg

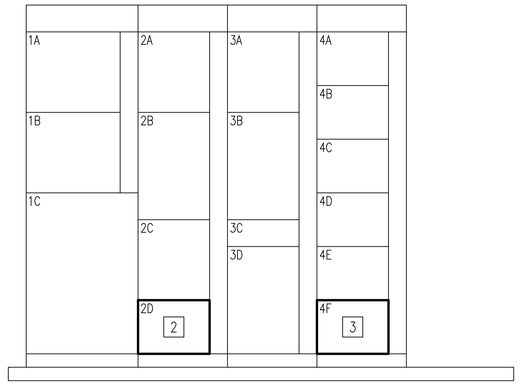

1 / E00.07 EX. PUMP AND BLOWER BUILDING NO.1
MOTOR CONTROL CENTER MCC-PB – ELEVATION [1]
NOT TO SCALE

GENERAL SHEET NOTES

1. SEE DRAWING E00.01 FOR ELECTRICAL LEGEND.
2. SEE DRAWING E00.02 FOR GENERAL NOTES AND ABBREVIATIONS.
3. SEE DRAWING E00.06 FOR ONE LINE DIAGRAMS.

SHEET KEY NOTES

[1] EXISTING MCC–PB IS: 480 VOLTS, 3 PHASE, 3 WIRE, 600 AMP, SQUARE D MODEL 6.

[2] REPLACE EXISTING NAMEPLATE AND PROVIDE NEW NAME PLATE "AERATION DISTRIBUTION BOX SUBMERSIBLE MIXER CONTROL PANEL ADB–MCP–101". REFER TO EXISTING PUMP AND BLOWER BUILDING MCC–PB – PARTIAL ONE LINE DIAGRAM FOR ADDITIONAL REQUIREMENTS.

[3] REPLACE EXISTING NAMEPLATE AND PROVIDE NEW NAME PLATE "AERATION BOX MINI POWER–ZONE PANEL LP–AB". REFER TO EXISTING PUMP AND BLOWER BUILDING MCC–PB – PARTIAL ONE LINE DIAGRAM FOR ADDITIONAL REQUIREMENTS.

EXISTING PUMP AND BLOWER BUILDING NO.1 - NEW CONDUIT AND CABLE SCHEDULE

FDR NO.	FROM	TO	FEEDER			REMARKS
			VOLTS	PHASE	SIZE	
701	EX. SWBD SB-1	PROCESS BLOWER PBB-B-624 CP	480	3	3#4/0, 1#4G IN 3"C	VIA EXISTING SPARE CONDUIT, PROVIDE NEW CONDUIT AS REQUIRED
702	PROCESS BLOWER PBB-B-624 CP	PROCESS BLOWER PBB-B-624 DISCONECT SWITCH	480	3	3#4/0, 1#4G IN 3"C	VIA EXISTING SPARE CONDUIT, PROVIDE NEW CONDUIT AS REQUIRED
703	PROCESS BLOWER PBB-B-624 DISCONECT SWITCH	PROCESS BLOWER PBB-B-624	480	3	3#4/0, 1#4G IN 3"C	VIA EXISTING SPARE CONDUIT, PROVIDE NEW CONDUIT AS REQUIRED
704	EX. SWBD SB-1	PROCESS BLOWER PBB-B-625 CP	480	3	3#4/0, 1#4G IN 3"C	VIA EXISTING SPARE CONDUIT, PROVIDE NEW CONDUIT AS REQUIRED
705	PROCESS BLOWER PBB-B-625 CP	PROCESS BLOWER PBB-B-625 DISCONECT SWITCH	480	3	3#4/0, 1#4G IN 3"C	VIA EXISTING SPARE CONDUIT, PROVIDE NEW CONDUIT AS REQUIRED
706	PROCESS BLOWER PBB-B-625 DISCONECT SWITCH	PROCESS BLOWER PBB-B-625	480	3	3#4/0, 1#4G IN 3"C	VIA EXISTING SPARE CONDUIT, PROVIDE NEW CONDUIT AS REQUIRED
707	EX. MCC-PB	SUBMERSIBLE MIXER CP	480	3	3#12, 1#12G IN 3/4"C	ROUTE CONDUCTORS IN DUCTBANK FROM BLDG TO FACILTY
708	SUBMERSIBLE MIXER CP	SUBMERSIBLE MIXER ADB-SM-101	480	3	CABLE PROVIDED WITH MIXER	PROVIDE CABLES IN CONDUIT SEAL FOR CLASS 1, DIV. 2 AREA
709	SUBMERSIBLE MIXER CP	SUBMERSIBLE MIXER ADB-SM-102	480	3	CABLE PROVIDED WITH MIXER	PROVIDE CABLES IN CONDUIT SEAL FOR CLASS 1, DIV. 2 AREA
710	EX. MCC-PB	MINI POWER-ZONE PNL LPAB	480	3	3#10, 1#10G IN 3/4"C	ROUTE CONDUCTORS IN DUCTBANK FROM BLDG TO FACILTY

EXISTING PUMP AND BLOWER BUILDING - NEW CONDUIT AND CABLE SCHEDULE

FDR NO.	FROM	TO	FEEDER			REMARKS
			VOLTS	PHASE	SIZE	
1001	EX. PNL PPSH1	INTERMEDIATE PUMP CCT-IP-814 SSRV CP	480	3	3#8, 1#10G IN 1"C	ROUTE CONDUCTOR IN DUCTBANK FROM BLDG TO FACILTY
1002	INTERMEDIATE PUMP CCT-IP-814 SSRV CP	INTERMEDIATE PUMP CCT-IP-814 DISCONNECT SWITCH	480	3	3#8, 1#10G IN 1"C	ROUTE CONDUCTOR IN DUCTBANK FROM BLDG TO FACILTY
1003	INTERMEDIATE PUMP CCT-IP-814 DISCONNECT SWITCH	INTERMEDIATE PUMP CCT-IP-814	480	3	3#8, 1#10G IN 1"C	USE EXISTING CONDUIT. PROVIDE NEW CONDUITS AS REQUIRED.

REVISIONS

CLIENT INFORMATION

SUSSEX COUNTY, DE
ENGINEERING
DEPARTMENT

INLAND BAYS RWF
PHASE #2 EXPANSION:
CONTRACT S19-10

KEY PLAN

GRAPHIC SCALES

SIGNATURE

IL HWAN KIM LICENSE No. 19294 DELAWARE PROFESSIONAL ENGINEER
12-14-18

Whitman, Requardt & Associates, LLP
801 South Caroline Street, Baltimore, Maryland 21231

EX. PUMP & BLOWER BUILDING NO.1
MCC-PB ELEVATION
AND FEEDER SCHEDULES

DRAWING NO.

E00.07

SCALE: NONE		
DATE: DEC. 2018	SHEET 139 OF 217	
DES: JPS	DRAWN: SMC	CHECK: IHK

PLOT DATE: 12/14/2018 3:58:12 PM PAGE SETUP: WRA-PDF C36X24) PLOT STYLE: WRA_2006.CTB PAPER SIZE:ARCH FULL BLEED D (36.00 X 24.00 INCHES)
N:\14256-028\CADD\1425602800-07.dwg

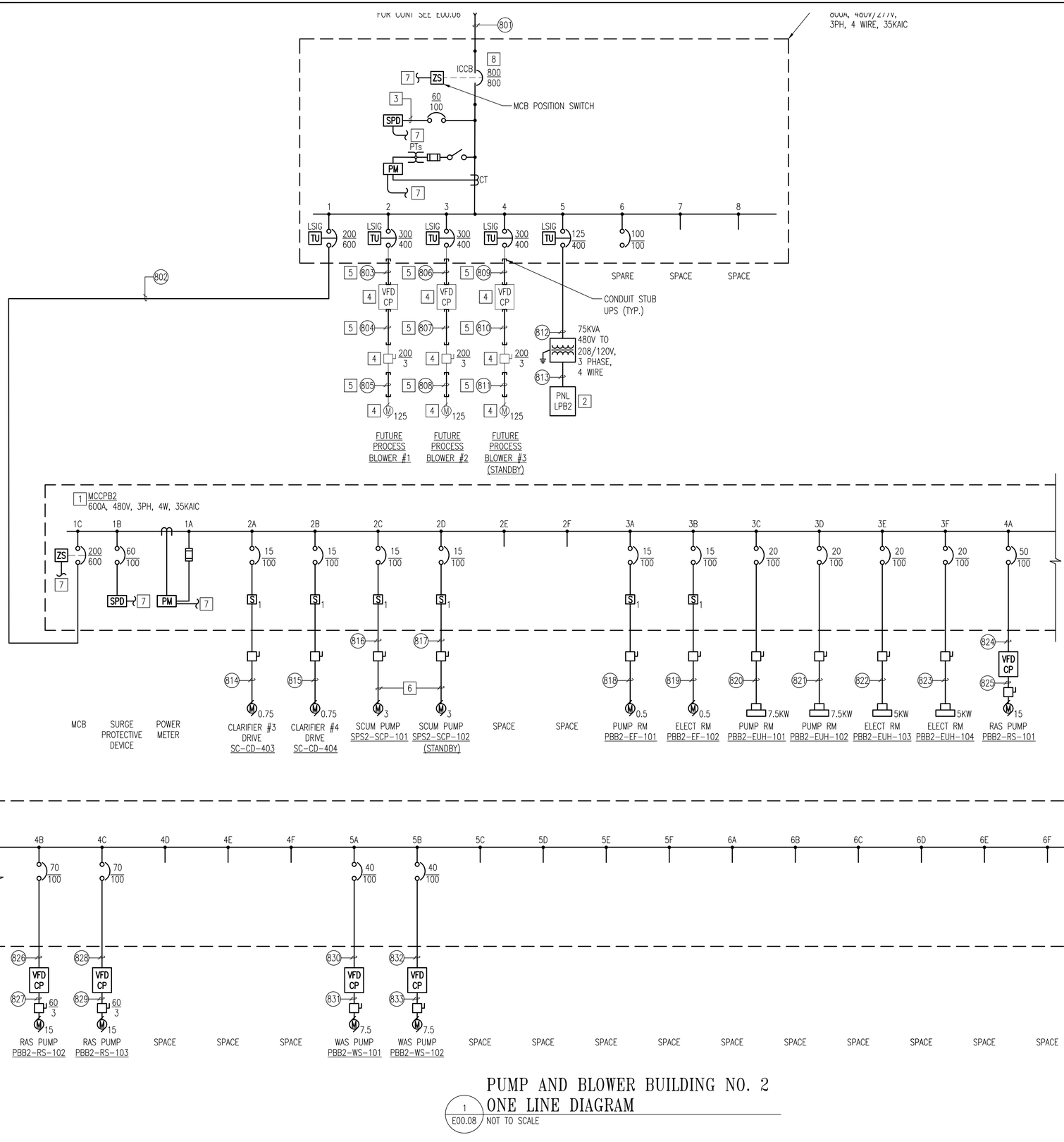

PUMP AND BLOWER BUILDING NO. 2
ONE LINE DIAGRAM

1 / E00.08 NOT TO SCALE

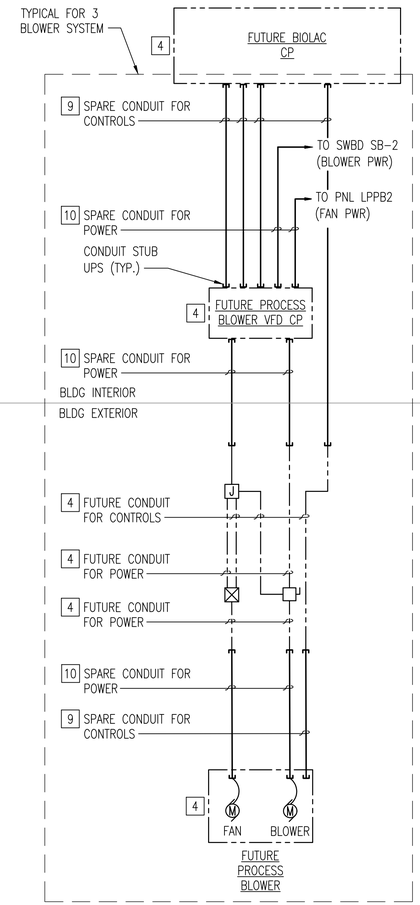

PROCESS BLOWER SYSTEM
CONDUIT RISER DIAGRAM

2 / E00.08 NOT TO SCALE

1. SEE DRAWING E00.01 FOR ELECTRICAL LEGEND.
2. SEE DRAWING E00.02 FOR GENERAL NOTES AND ABBREVIATIONS.
3. SEE DRAWING E00.09 FOR CONDUIT AND CABLE SCHEDULE.
4. CONTRACTOR SHALL COORDINATE CONDUIT STUBS UP TO FUTURE EQUIPMENT AS SHOWN ON THE POWER AND CONTROL PLAN.

SHEET KEY NOTES

1. SEE DRAWING E00.09 FOR ELEVATION OF MCCPB2.
2. SEE DRAWING E00.14 FOR PANEL SCHEDULE.
3. PROVIDE WIRING AS RECOMMENDED BY SPD MANUFACTURER.
4. FUTURE EQUIPMENT TO BE PROVIDED UNDER FUTURE PHASE.
5. SPARE CONDUITS PROVIDED FOR INSTALLATION OF FUTURE EQUIPMENT. SEE RISER DIAGRAM FOR REQUIREMENTS.
6. CABLE PROVIDED WITH SCUM PUMP. PROVIDE CABLE IN CONDUIT SEAL TO ENTER HAZARDOUS AREA.
7. STATUS COMMUNICATION SIGNALS TO PSC-IPS, SEE INSTRUMENTATION DRAWINGS FOR REQUIREMENTS.
8. PROVIDE CIRCUIT BREAKER WITH LSI FUNCTION.
9. PROVIDE 3/4" SPARE CONDUITS FOR CONTROLS. ROUTE CONDUITS BELOW SLAB AND PROVIDE STUB UPS.
10. PROVIDE 3/4" SPARE CONDUITS FOR BLOWER FAN. PROVIDE SPARE CONDUITS FOR BLOWER PER CONDUIT AND CABLE SCHEDULE. ROUTE CONDUITS BELOW SLAB AND PROVIDE STUB UPS.

REVISIONS

CLIENT INFORMATION

SUSSEX COUNTY, DE
ENGINEERING
DEPARTMENT

INLAND BAYS RWF
PHASE #2 EXPANSION:
CONTRACT S19-10

KEY PLAN

GRAPHIC SCALES

SIGNATURE

IL HWAN KIM
LICENSE
No. 19294
DELAWARE
PROFESSIONAL ENGINEER
12-14-18

Whitman, Requardt & Associates, LLP
801 South Caroline Street, Baltimore, Maryland 21231

PUMP AND BLOWER BUILDING NO. 2
ONE LINE DIAGRAM

DRAWING NO.

E00.08

SCALE: NONE		
DATE: DEC. 2018	SHEET 140 OF 217	
DES: JPS	DRAWN: SMC	CHECK: IHK

PLOT DATE: 12/14/2018 2:59:18 PM PAGE SETUP: WRA-PDF (36X24) PLOT STYLE: WRA_2006.CTB PAPER SIZE:ARCH FULL BLEED D (36.00 X 24.00 INCHES)
N:\14456-028\CADD\14456028E00-08.dwg

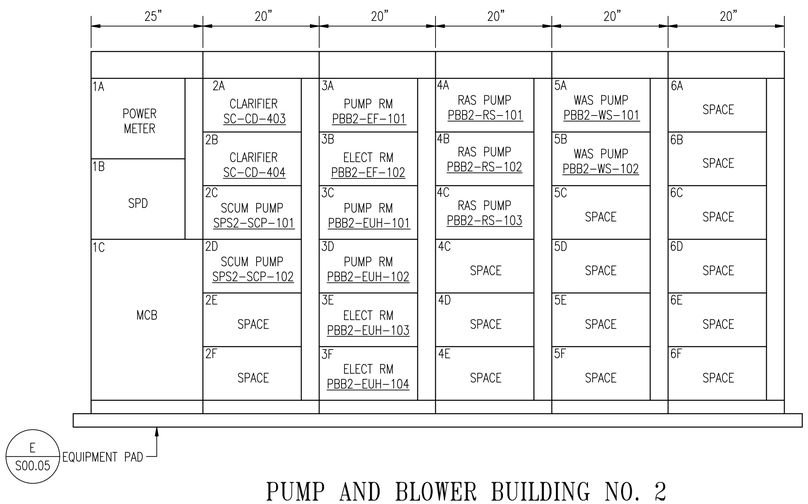

PUMP AND BLOWER BUILDING NO. 2
MOTOR CONTROL MCCB2 - ELEVATION

1
E00.09
NOT TO SCALE

PUMP AND BLOWER BUILDING NO.2 - NEW CONDUIT AND CABLE SCHEDULE

FDR NO.	FROM	TO	FEEDER			REMARKS
			VOLTS	PHASE	SIZE	
801	EX. PUMP AND BLOWER BLDG. SWBD SB-1	SWBD SB2	480	3	3 SETS (4#300KCMIL, 1#1/0G IN 4"C) AND (1) - 4"C SPARE	CONDUITS TO BE ROUTED IN DUCTBANK OUTSIDE BLDG
802	SWBD SB2	MCCPB2	480	3	4#3/0, 1#6 IN 2"	
803	SWBD SB2	FUTURE PROCESS BLOWER #1 VFD CP	480	3	3"C SPARE	PROVIDE CONDUIT STUB UPS AND CAPS FOR FUTURE CONNECTION
804	FUTURE PROCESS BLOWER #1 VFD CP	FUTURE PROCESS BLOWER #1 DISCONNECT SWITCH	480	3	3"C SPARE	PROVIDE CONDUIT STUB UPS AND CAPS FOR FUTURE CONNECTION
805	FUTURE PROCESS BLOWER #1 DISCONNECT SWITCH	FUTURE PROCESS BLOWER #1	480	3	3"C SPARE	PROVIDE CONDUIT STUB UPS AND CAPS FOR FUTURE CONNECTION
806	SWBD SB2	FUTURE PROCESS BLOWER #2 VFD CP	480	3	3"C SPARE	PROVIDE CONDUIT STUB UPS AND CAPS FOR FUTURE CONNECTION
807	FUTURE PROCESS BLOWER #2 VFD CP	FUTURE PROCESS BLOWER #2 DISCONNECT SWITCH	480	3	3"C SPARE	PROVIDE CONDUIT STUB UPS AND CAPS FOR FUTURE CONNECTION
808	FUTURE PROCESS BLOWER #2 DISCONNECT SWITCH	FUTURE PROCESS BLOWER #2	480	3	3"C SPARE	PROVIDE CONDUIT STUB UPS AND CAPS FOR FUTURE CONNECTION
809	SWBD SB2	FUTURE PROCESS BLOWER #3 VFD CP	480	3	3"C SPARE	PROVIDE CONDUIT STUB UPS AND CAPS FOR FUTURE CONNECTION
810	FUTURE PROCESS BLOWER #3 VFD CP	FUTURE PROCESS BLOWER #3 DISCONNECT SWITCH	480	3	3"C SPARE	PROVIDE CONDUIT STUB UPS AND CAPS FOR FUTURE CONNECTION
811	FUTURE PROCESS BLOWER #3 DISCONNECT SWITCH	FUTURE PROCESS BLOWER #3	480	3	3"C SPARE	PROVIDE CONDUIT STUB UPS AND CAPS FOR FUTURE CONNECTION
812	SWBD SB2	XFMR TB2	480	3	3#1, 1#6G IN 1 1/2"C	
813	XFMR TB2	PANEL LPB2	208/120	3	4#250KCMIL, 1#4G IN 3"C	
814	MCCB2	CLARIFIER #3 DRIVE SC-CD-403	480	3	3#12, 1#12G IN 3/4"C	ROUTE CONDUCTORS IN DUCTBANK FROM BLDG TO FACILTY
815	MCCB2	CLARIFIER #3 DRIVE SC-CD-404	480	3	3#12, 1#12G IN 3/4"C	ROUTE CONDUCTORS IN DUCTBANK FROM BLDG TO FACILTY
816	MCCB2	SCUM PUMP SPS2-SCP-101	480	3	3#12, 1#12G IN 3/4"C	ROUTE CONDUCTORS IN DUCTBANK FROM BLDG TO FACILTY
817	MCCB2	SCUM PUMP SPS2-SCP-102	480	3	3#12, 1#12G IN 3/4"C	ROUTE CONDUCTORS IN DUCTBANK FROM BLDG TO FACILTY
818	MCCB2	PUMP RM EXHAUST FAN PBB2-EF-101	480	3	3#12, 1#12G IN 3/4"C	
819	MCCB2	PUMP RM EXHAUST FAN PBB2-EF-102	480	3	3#12, 1#12G IN 3/4"C	
820	MCCB2	PUMP RM PBB2-EUH-101	480	3	3#12, 1#12G IN 3/4"C	
821	MCCB2	PUMP RM PBB2-EUH-102	480	3	3#12, 1#12G IN 3/4"C	
822	MCCB2	ELECT RM PBB2-EUH-103	480	3	3#12, 1#12G IN 3/4"C	
823	MCCB2	ELECT RM PBB2-EUH-104	480	3	3#12, 1#12G IN 3/4"C	
824	MCCB2	RAS PUMP PBB2-RS-101 VFD CP	480	3	3#10, 1#10G IN 3/4"C	
825	RAS PUMP PBB2-RS-101 VFD CP	RAS PUMP PBB2-RS-101	480	3	3#10, 1#10G IN 3/4"C	
826	MCCB2	RAS PUMP PBB2-RS-102 VFD CP	480	3	3#8, 1#10G IN 3/4"C	
827	RAS PUMP PBB2-RS-102 VFD CP	RAS PUMP PBB2-RS-102	480	3	3#8, 1#10G IN 3/4"C	
828	MCCB2	RAS PUMP PBB2-RS-103 VFD CP	480	3	3#8, 1#10G IN 3/4"C	
829	RAS PUMP PBB2-RS-103 VFD CP	RAS PUMP PBB2-RS-103	480	3	3#8, 1#10G IN 3/4"C	
830	MCCB2	RAS PUMP PBB2-WS-101 VFD CP	480	3	3#10, 1#10G IN 3/4"C	
831	RAS PUMP PBB2-WS-101 VFD CP	RAS PUMP PBB2-WS-101	480	3	3#10, 1#10G IN 3/4"C	
832	MCCB2	RAS PUMP PBB2-WS-102 VFD CP	480	3	3#10, 1#10G IN 3/4"C	
833	RAS PUMP PBB2-WS-102 VFD CP	RAS PUMP PBB2-WS-102	480	3	3#10, 1#10G IN 3/4"C	

GENERAL SHEET NOTES

1. SEE DRAWING E00.01 FOR ELECTRICAL LEGEND.
2. SEE DRAWING E00.02 FOR GENERAL NOTES AND ABBREVIATIONS.
3. SEE DRAWING E00.08 FOR ONE LINE DIAGRAM.
4. PROVIDE PULL STRING IN ALL SPARE CONDUITS.
5. CONTRACTOR SHALL COORDINATE THE MCC ASSEMBLY OVERALL DIMENSIONS WITH MANUFACTURER. DIMENSIONS SHOWN ON DRAWINGS ARE APPROXIMATE ONLY.

REVISIONS

CLIENT INFORMATION

SUSSEX COUNTY, DE
ENGINEERING
DEPARTMENT

INLAND BAYS RWF
PHASE #2 EXPANSION:
CONTRACT S19-10

KEY PLAN

GRAPHIC SCALES

SIGNATURE

IL HWAN KIM
LICENSE
No. 19294
DELAWARE
PROFESSIONAL ENGINEER
12-14-18

Whitman, Requardt & Associates, LLP
801 South Caroline Street, Baltimore, Maryland 21231

PUMP AND BLOWER BUILDING NO. 2
MCCB2 ELEVATION
AND FEEDER SCHEDULE

DRAWING NO.

E00.09

SCALE: NONE		
DATE: DEC. 2018	SHEET 141 OF 217	
DES: JPS	DRAWN: SMC	CHECK: IHK

PLOT DATE: 12/14/2018 2:58:22 PM PAGE SETUP: WRA-PSF (36X24) PLOT STYLE: WRA_2006.CTB PAPER SIZE:ARCH FULL BLEED D (36.00 X 24.00 INCHES)
N:\14256-026\CADD\14256026E00-09.dwg

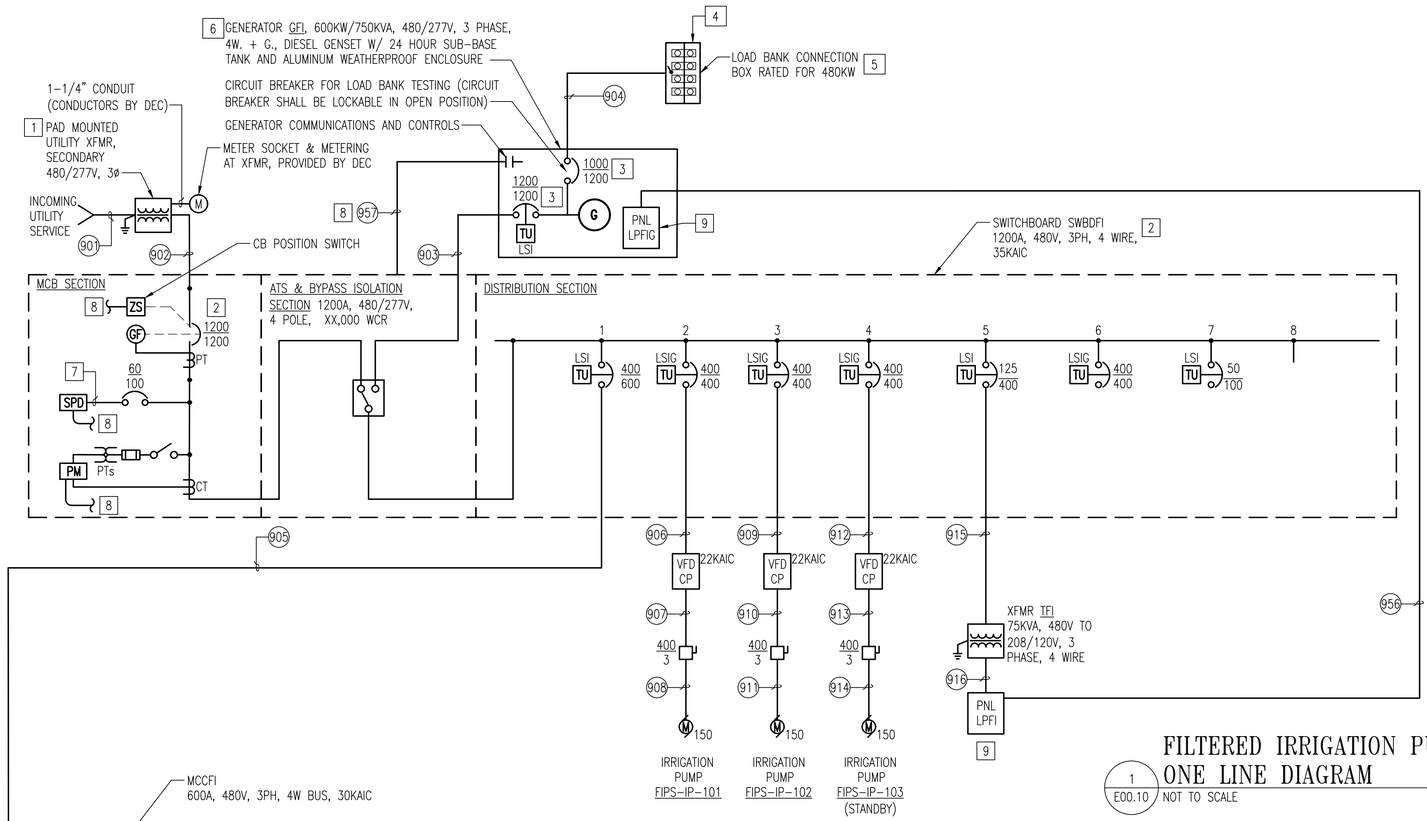

FILTERED IRRIGATION PUMP STATION ONE LINE DIAGRAM

1 E00.10 NOT TO SCALE

GENERAL SHEET NOTES

1. SEE DRAWING E00.01 FOR ELECTRICAL LEGEND.
2. SEE DRAWING E00.02 FOR GENERAL NOTES AND ABBREVIATIONS.
3. SEE DRAWING E00.11 FOR CONDUIT AND CABLE SCHEDULE.
4. SEE INSTRUMENTATION DRAWINGS FOR ADDITIONAL REQUIREMENTS FOR ALL CONTROL PANELS.
5. FEEDERS FOR THE FILTERED IRRIGATION PUMP STATION ARE SPECIFIED IN 900 SERIES FOR DIFFERENTIATION AND CLARITY.

SHEET KEY NOTES

1. TRANSFORMER SHALL BE FURNISHED BY DELAWARE ELECTRICAL COOPERATIVE (DEC) UTILITY COMPANY AND INSTALLED BY CONTRACTOR. COORDINATE WITH UTILITY COMPANY.
2. PROVIDE SERVICE ENTRANCE RATED MAIN CIRCUIT BREAKER SWITCHBOARD. PROVIDE CIRCUIT BREAKER WITH LSIG FUNCTION.
3. PROVIDE KEY INTERLOCK FOR TWO OUTPUT CIRCUIT BREAKERS.
4. PROVIDE A PERMANENT PLACARD NEXT TO LOAD BANK CONNECTION BOX INDICATING A WARNING SIGN "LOCKOUT/TAGOUT CIRCUIT BREAKER FOR LOADBANK CONNECTION BOX LOCATED AT THE GENERATOR PRIOR TO MAKING CONNECTIONS TO PORTABLE LOAD BANK".
5. PROVIDE NEMA 4X (4'x4'x18") HINGED BOX, PAD LOCKED. PROVIDE COPPER BLOCKS, MANUFACTURED BY SQUARE D OR APPROVED EQUAL, SUITABLE FOR 1 SET OF 3#400KCMIL CONDUCTORS (PHASE A, PHASE B, PHASE C AND GROUND). EACH BLOCK SHALL BE SUITABLE FOR CONNECTION OF 3#400KCMIL CONDUCTORS. PROVIDE TWO POWER BLOCKS FOR GROUNDING CONNECTION.
6. EMERGENCY GENERATOR IS SIZED FOR A LOAD OF 2-150HP FILTER IRRIGATION PUMPS PLUS PUMP STATION MISCELLANEOUS LOAD ONLY.
7. PROVIDE WIRING AS RECOMMENDED BY SPD MANUFACTURER.
8. STATUS COMMUNICATION SIGNALS TO ATS AND PSC-IPS, SEE INSTRUMENTATION DRAWINGS FOR REQUIREMENTS.
8. SEE DRAWING E00.14 FOR PANEL SCHEDULE.

REVISIONS		

CLIENT INFORMATION

SUSSEX COUNTY, DE ENGINEERING DEPARTMENT

INLAND BAYS RWF PHASE #2 EXPANSION: CONTRACT S19-10

KEY PLAN

GRAPHIC SCALES

SIGNATURE

IL HWAN KIM LICENSE No. 19294 DELAWARE PROFESSIONAL ENGINEER
12-14-18

Whitman, Requardt & Associates, LLP
801 South Caroline Street, Baltimore, Maryland 21231

FILTERED IRRIGATION PUMP STATION ONE LINE DIAGRAM

DRAWING NO.

E00.10

SCALE: NONE		
DATE: DEC. 2018	SHEET 142 OF 217	
DES: JPS	DRAWN: SMC	CHECK: IHK

N:\14256-005\CADD\1425602E00-10.dwg
PLOT DATE: 12/14/2018 2:58:31 PM PAGE SETUP: WRA-PDF C36X24O PLOT STYLE: WRA_2006.CTB PAPER SIZE:ARCH FULL BLEED D (36.00 X 24.00 INCHES)

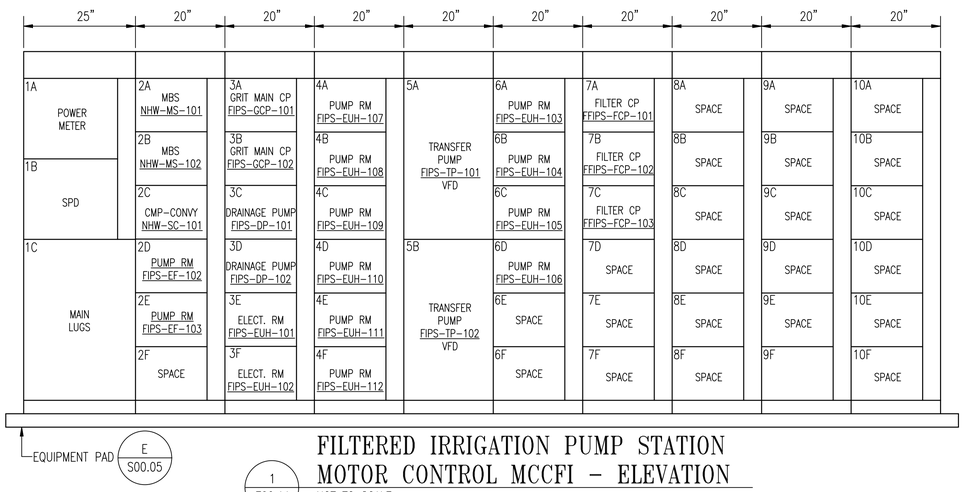

1
E00.11

FILTERED IRRIGATION PUMP STATION MOTOR CONTROL MCCFI – ELEVATION

NOT TO SCALE

GENERAL SHEET NOTES

1. SEE DRAWING E00.01 FOR ELECTRICAL LEGEND.
2. SEE DRAWING E00.02 FOR GENERAL NOTES AND ABBREVIATIONS.
3. SEE DRAWING E00.10 FOR ONE LINE DIAGRAM.
4. CONTRACTOR SHALL COORDINATE THE MCC ASSEMBLY OVERALL DIMENSIONS WITH MANUFACTURER. DIMENSIONS SHOWN ON DRAWINGS ARE APPROXIMATE ONLY.

FILTERED IRRIGATION PUMP STATION - CONDUIT AND CABLE SCHEDULE CONTINUED

FDR NO.	FROM	TO	FEEDER VOLTS	FEEDER PHASE	FEEDER SIZE	REMARKS
950	MCCFI	ELECT. RM FIPS-EUH-104	480	3	3#12, 1#12G IN 3/4"C	
951	MCCFI	ELECT. RM FIPS-EUH-105	480	3	3#12, 1#12G IN 3/4"C	
952	MCCFI	ELECT. RM FIPS-EUH-106	480	3	3#12, 1#12G IN 3/4"C	
953	MCCFI	FILTER FIPS-F-101 CP FIPS-FCP-101	480	3	3#8, 1#10G IN 3/4"C	CONTROL PANEL MOUNTED ON FILTER FIPS-F-101
954	MCCFI	FILTER FIPS-F-102 CP FIPS-FCP-102	480	3	3#8, 1#10G IN 3/4"C	CONTROL PANEL MOUNTED ON FILTER FIPS-F-102
955	MCCFI	FILTER FIPS-F-103 CP FIPS-FCP-103	480	3	3#8, 1#10G IN 3/4"C	CONTROL PANEL MOUNTED ON FILTER FIPS-F-103
956	PNL LPFI	PNL LPFIG	480	3	4#1, 1#8G IN 1 1/2"C	ROUTE FEEDERS IN DUCTBANK FROM BLDG TO EQUIPMENT
957	GENERATOR GFI	SWBD SWBDFI	-	-	COMMUNICATION/CONTROL WIRING	ROUTE WIRING IN DUCTBANK FROM GENERATOR ENCLOSURE TO EQUIPMENT

FILTERED IRRIGATION PUMP STATION - CONDUIT AND CABLE SCHEDULE

FDR NO.	FROM	TO	FEEDER VOLTS	FEEDER PHASE	FEEDER SIZE	REMARKS
901	INCOMING UTILITY SERVICE	PAD MOUNTED UTILITY XFMR	15K	3	(2)- 4"C (FEEDERS PROVIDED BY UTILITY COMPANY)	CONDUITS TO BE ROUTED PER UTILITY REQUIREMENTS
902	PAD MOUNTED UTILITY XFMR	SWBD SWBDFI	480/277	3	3 SETS (4#600KCMIL, 1#3/0G IN 4"C) AND (1) - 4"C SPARE	ROUTE FEEDERS IN DUCTBANK FROM BLDG TO EQUIPMENT
903	SWBD SWBDFI	GENERATOR GFI	480/277	3	3 SETS (4#600KCMIL, 1#3/0G IN 4"C) AND (1) - 4"C SPARE	ROUTE FEEDERS IN DUCTBANK FROM BLDG TO EQUIPMENT
904	GENERATOR GFI	LOAD BANK CONNECTION BOX	480	3	3 SETS (4#400KCMIL, 1#2/0G IN 3"C) AND (1) - 4"C SPARE	ROUTE FEEDERS IN DUCTBANK FROM BLDG TO EQUIPMENT
905	SWBD SWBDFI	MCCFI	480	3	2 SETS (3#3/0, 1#3G IN 2"C)	
906	SWBD SWBDFI	IRRIGATION PUMP FIPS-IP-101 VFD CP	480	3	3#350, 1#4G IN 3"C	
907	IRRIGATION PUMP FIPS-IP-101 VFD CP	IRRIGATION PUMP FIPS-IP-101 DISCONNECT SWITCH	480	3	3#350, 1#4G IN 3"C	
908	IRRIGATION PUMP FIPS-IP-101 DISCONNECT SWITCH	IRRIGATION PUMP FIPS-IP-101	480	3	3#350, 1#4G IN 3"C	
909	SWBD SWBDFI	IRRIGATION PUMP FIPS-IP-102 VFD CP	480	3	3#350, 1#4G IN 3"C	
910	IRRIGATION PUMP FIPS-IP-102 VFD CP	IRRIGATION PUMP FIPS-IP-102 DISCONNECT SWITCH	480	3	3#350, 1#4G IN 3"C	
911	IRRIGATION PUMP FIPS-IP-102 DISCONNECT SWITCH	IRRIGATION PUMP FIPS-IP-102	480	3	3#350, 1#4G IN 3"C	
912	SWBD SWBDFI	IRRIGATION PUMP FIPS-IP-103 VFD CP	480	3	3#350, 1#4G IN 3"C	
913	IRRIGATION PUMP FIPS-IP-103 VFD CP	IRRIGATION PUMP FIPS-IP-103 DISCONNECT SWITCH	480	3	3#350, 1#4G IN 3"C	
914	IRRIGATION PUMP FIPS-IP-103 DISCONNECT SWITCH	IRRIGATION PUMP FIPS-IP-103	480	3	3#350, 1#4G IN 3"C	
915	SWBD SWBDFI	XFMR TFI	480	3	3#1, 1#6G IN 1 1/2"C	
916	XFMR TFI	PNL LPFI	208/120	3	4#250KCMIL, 1#4G IN 3"C	
917	MCCFI	MECHANICAL BAR SCREEN MAIN CP FIPS-MBP-101	480	3	3#12, 1#12G IN 3/4"C	
918	MECHANICAL BAR SCREEN MAIN CP FIPS-MBP-101	MECHANICAL BAR SCREEN NHW-MS-101	480	3	3#12, 1#12G IN 3/4"C	ROUTE FEEDERS IN DUCTBANK FROM BLDG TO FACILITY
919	MCCFI	MECHANICAL BAR SCREEN MAIN CP FIPS-MBP-102	480	3	3#12, 1#12G IN 3/4"C	
920	MECHANICAL BAR SCREEN MAIN CP FIPS-MBP-102	MECHANICAL BAR SCREEN NHW-MS-102	480	3	3#12, 1#12G IN 3/4"C	ROUTE FEEDERS IN DUCTBANK FROM BLDG TO FACILITY
921	MCCFI	COMPACTING CONVEYOR MAIN CP FIPS-SCP-101	480	3	3#12, 1#12G IN 3/4"C	
922	COMPACTING CONVEYOR MAIN CP FIPS-SCP-101	COMPACTING CONVEYOR NHW-SC-101	480	3	3#12, 1#12G IN 3/4"C	ROUTE FEEDERS IN DUCTBANK FROM BLDG TO FACILITY
923	MCCFI	PUMP RM FIPS-EF-102	480	3	3#12, 1#12G IN 3/4"C	
924	MCCFI	PUMP RM FIPS-EF-103	480	3	3#12, 1#12G IN 3/4"C	
925	MCCFI	GRIT MAIN CP FIPS-GCP-101	480	3	3#8, 1#10G IN 3/4"C	
926	GRIT MAIN CP FIPS-GCP-101	GRIT PUMP GF-GP-101	480	3	3#10, 1#10G IN 3/4"C	ROUTE FEEDERS IN DUCTBANK FROM BLDG TO FACILITY
927	GRIT MAIN CP FIPS-GCP-101	GRIT WASHER GF-GW-101	480	3	3#12, 1#12G IN 3/4"C	ROUTE FEEDERS IN DUCTBANK FROM BLDG TO FACILITY
928	GRIT MAIN CP FIPS-GCP-101	GRIT TANK GF-GT-101	480	3	3#12, 1#12G IN 3/4"C	ROUTE FEEDERS IN DUCTBANK FROM BLDG TO FACILITY
929	GRIT MAIN CP FIPS-GCP-101	GRIT AGITATOR GF-GA-101	480	3	3#12, 1#12G IN 3/4"C	ROUTE FEEDERS IN DUCTBANK FROM BLDG TO FACILITY
930	MCCFI	GRIT MAIN CP FIPS-GCP-102	480	3	3#8, 1#10G IN 3/4"C	
931	GRIT MAIN CP FIPS-GCP-102	GRIT PUMP GF-GP-102	480	3	3#10, 1#10G IN 3/4"C	ROUTE FEEDERS IN DUCTBANK FROM BLDG TO FACILITY
932	GRIT MAIN CP FIPS-GCP-102	GRIT WASHER GF-GW-102	480	3	3#12, 1#12G IN 3/4"C	ROUTE FEEDERS IN DUCTBANK FROM BLDG TO FACILITY
933	GRIT MAIN CP FIPS-GCP-102	GRIT TANK GF-GT-102	480	3	3#12, 1#12G IN 3/4"C	ROUTE FEEDERS IN DUCTBANK FROM BLDG TO FACILITY
934	GRIT MAIN CP FIPS-GCP-102	GRIT AGITATOR GF-GA-102	480	3	3#12, 1#12G IN 3/4"C	ROUTE FEEDERS IN DUCTBANK FROM BLDG TO FACILITY
935	MCCFI	DRAINAGE PUMP CP FIPS-DDP-101	480	3	3#12, 1#12G IN 3/4"C	DRAINAGE PUMP FIPS-DP-101 FEEDER
936	DRAINAGE PUMP CP FIPS-DDP-101	DRAINAGE PUMP FIPS-DP-101	480	3	3#12, 1#12G IN 3/4"C	
937	MCCFI	DRAINAGE PUMP CP FIPS-DDP-101	480	3	3#12, 1#12G IN 3/4"C	DRAINAGE PUMP FIPS-DP-102 FEEDER
938	DRAINAGE PUMP CP FIPS-DDP-101	DRAINAGE PUMP FIPS-DP-102	480	3	3#12, 1#12G IN 3/4"C	
939	MCCFI	ELECT. RM FIPS-EUH-101	480	3	3#12, 1#12G IN 3/4"C	
940	MCCFI	ELECT. RM FIPS-EUH-102	480	3	3#12, 1#12G IN 3/4"C	
941	MCCFI	ELECT. RM FIPS-EUH-107	480	3	3#12, 1#12G IN 3/4"C	
942	MCCFI	ELECT. RM FIPS-EUH-108	480	3	3#12, 1#12G IN 3/4"C	
943	MCCFI	ELECT. RM FIPS-EUH-109	480	3	3#12, 1#12G IN 3/4"C	
944	MCCFI	ELECT. RM FIPS-EUH-110	480	3	3#12, 1#12G IN 3/4"C	
945	MCCFI	ELECT. RM FIPS-EUH-111	480	3	3#12, 1#12G IN 3/4"C	
946	MCCFI	ELECT. RM FIPS-EUH-112	480	3	3#12, 1#12G IN 3/4"C	
947	MCCFI	TRANSFER PUMP FIPS-TP-101	480	3	3#2, 1#8G IN 1 1/4"C	
948	MCCFI	TRANSFER PUMP FIPS-TP-102	480	3	3#2, 1#8G IN 1 1/4"C	
949	MCCFI	ELECT. RM FIPS-EUH-103	480	3	3#12, 1#12G IN 3/4"C	

REVISIONS

CLIENT INFORMATION

SUSSEX COUNTY, DE
ENGINEERING
DEPARTMENT

INLAND BAYS RWF
PHASE #2 EXPANSION:
CONTRACT S19-10

KEY PLAN

GRAPHIC SCALES

SIGNATURE

IL HWAN KIM
LICENSE
No. 19294
DELAWARE
PROFESSIONAL ENGINEER
12-14-18

Whitman, Requardt & Associates, LLP
801 South Caroline Street, Baltimore, Maryland 21231

FILTERED IRRIGATION PUMP STATION
MCCFI ELEVATION AND
FEEDER SCHEDULE

DRAWING NO.

E00.11

SCALE: NONE		
DATE: DEC. 2018	SHEET 143 OF 217	
DES: JPS	DRAWN: SMC	CHECK: IHK

PLOT DATE: 12/14/2018 3:58:37 PM PAGE SETUP: WRA-PDF (36X24) PLOT STYLE: WRA_2006.CTB PAPER SIZE:ARCH FULL BLEED D (36.00 X 24.00 INCHES)
N:\14256-028\CADD\14256028D00-11.dwg

GENERAL SHEET NOTES

1. SEE DRAWING E00.01 FOR ELECTRICAL LEGEND.
2. SEE DRAWING E00.02 FOR GENERAL NOTES AND ABBREVIATIONS.

LIGHTING FIXTURE SCHEDULE

FIXTURE TYPE	DESCRIPTION	MOUNTING	LAMPS			MAUNFACTURER AND CATALOG NUMBER	VOLTS	REMARKS
			NO.	WATTS	TYPE			
A1	INDUSTRIAL ENCLOSED AND GASKETED LED, ONE PIECE FIBERGLASS HOUSING WITH CONTINUOUS GASKET, CAPTIVE POLYMETRIC LATCHES AND A LOW PROFILE INJECTION MOLDED ACRYLIC, LINEAL RIBBED FROSTED LENS.	PENDANT	1	45	LED	LITHONIA FEM L48 6000LM IMAFD MD MVOLT 40K 80CRI	120	
A2	INDUSTRIAL ENCLOSED AND GASKETED LED, ONE PIECE FIBERGLASS HOUSING WITH CONTINUOUS GASKET, CAPTIVE POLYMETRIC LATCHES AND A LOW PROFILE INJECTION MOLDED ACRYLIC, LINEAL RIBBED FROSTED LENS.	PENDANT	1	80	LED	LITHONIA FEM L48 10000LM IMAFD MD MVOLT 40K 80CRI	120	
B1	INDUSTRIAL ENCLOSED AND GASKETED LED, ONE PIECE FIBERGLASS HOUSING WITH CONTINUOUS GASKET, CAPTIVE POLYMETRIC LATCHES AND A LOW PROFILE INJECTION MOLDED ACRYLIC, LINEAL RIBBED FROSTED LENS.	PENDANT	1	64	LED	LITHONIA FEM L96 9000LM IMAFD MD MVOLT 40K 80CRI	120	
B2	INDUSTRIAL ENCLOSED AND GASKETED LED, ONE PIECE FIBERGLASS HOUSING WITH CONTINUOUS GASKET, CAPTIVE POLYMETRIC LATCHES AND A LOW PROFILE INJECTION MOLDED ACRYLIC, LINEAL RIBBED FROSTED LENS.	PENDANT	1	87	LED	LITHONIA FEM L96 12000LM IMAFD MD MVOLT 40K 80CRI	120	
B3	INDUSTRIAL ENCLOSED AND GASKETED LED, ONE PIECE FIBERGLASS HOUSING WITH CONTINUOUS GASKET, CAPTIVE POLYMETRIC LATCHES AND A LOW PROFILE INJECTION MOLDED ACRYLIC, LINEAL RIBBED FROSTED LENS.	PENDANT	1	123	LED	LITHONIA FEM L96 18000LM IMAFD MD MVOLT 40K 80CRI	120	
D1	CLASS I, DIV. 2, CORROSION RESISTANT, WET RATED TELESCOPING POLE FIXTURE TYPE I	STANCHION	1	29	LED	CROUSE-HINDS VMV-3L-W-J-R1-G-UNIV1	120	SEE DRAWING 3/E00-22 FOR MOUNTING DETAIL AND CATALOG NO.
D3	CLASS I, DIV. 2, CORROSION RESISTANT, WET RATED TELESCOPING POLE FIXTURE TYPE III	STANCHION / BASE PLATE	1	29	LED	CROUSE-HINDS VMV-3L-W-J-R3-G-UNIV1	120	SEE DRAWING 3/E00-22 AND 4/E00-22 FOR MOUNTING DETAIL AND CATALOG NO.
E	OUTDOOR WALL PACK, OLYCARBONATE LENS, WET LOCATION LISTED	WALL	1	16	CFL	LITHONIA TWH-LED-ALO-40K-T3M-120-PE-SF-DDBXD	120	FIELD ADJUST BRIGHTNESS TO "STEP 1"
EM	EMERGENCY LIGHT. WHITE UV STABILIZED THERMO PLASTIC SCRATCH RESISTANT, NICKEL CADMIUM BATTERY	WALL	2	2.88	LED	LITHONIA ELM2 LED	120	
W	CLASS I, DIV. 2, CORROSIION RESISTANT, WET RATED LINEAR FIXTURE	WALL	1	32.5	LED	CROUSE-HINDS DLL-2-UNV1-S903-TF-P DP1052MTK	120	
X	ALL-CONDITION EXIT SIGN, UL LISTED FOR NEMA 4X, 90 MIN. NICKEL CADMIUM BATTERY	WALL/CEILING	1	3.3	LED RED	LITHONIA LV EL N SERIES	120	

REVISIONS

CLIENT INFORMATION

SUSSEX COUNTY, DE
ENGINEERING
DEPARTMENT

INLAND BAYS RWF
PHASE #2 EXPANSION:
CONTRACT S19-10

KEY PLAN

GRAPHIC SCALES

SIGNATURE

IL HWAN KIM
LICENSE
No. 19294
DELAWARE
PROFESSIONAL ENGINEER
12-14-18

Whitman, Requardt & Associates, LLP
801 South Caroline Street, Baltimore, Maryland 21231

ELECTRICAL
LIGHTING FIXTURE SCHEDULE

DRAWING NO.

E00.12

SCALE: NONE		
DATE: DEC. 2018	SHEET 144 OF 217	
DES: JPS	DRAWN: SMC	CHECK: IHK

PLOT DATE: 12/14/2018 2:58:48 PM PAGE SETUP: WRA-PDF (36X24) PLOT STYLE: WRA_2006.CTB PAPER SIZE:ARCH FULL BLEED D (36.00 X 24.00 INCHES)
N:\14256-028\CADD\14256028E00-12.dwg

EX. P&B BLDG NO.1 - EX. PANEL - PPPB2

VOLTAGE: 480/277 | BUS RATING: 100 | NEMA ENCLOSURE TYPE: 12
PHASES: 3-PH, 4-W + G | NEUTRAL BUS RATING: 100 | LOCATION: ELEC RM
KAIC: 35 | MOUNTING: SURFACE | ACCESSORIES: -
MAINS: 250A. MCB | FED FROM: EX. SWBD SB-1 | -

	KVA	BREAKER POLE	BREAKER TRIP	CODE	ROOM # - LOAD DESCRIPTION	POLE	POLE	ROOM # - LOAD DESCRIPTION	CODE	BREAKER POLE	BREAKER TRIP	KVA
		2	70		GENERATOR LIGHTING TRANSFORMER	1	2					
						3	4	ELECTRICAL ROOM AC UNIT PBB-AC-652		3	20	
		1	15		SPARE	5	6					
						7	8					
		3	40		NORTH BURTON IRRIGATION RIG	9	10	CONTROL ROOM AC UNIT PBB-AC-651		3	20	
						11	12					
	2.9			**M**	SPARE **AERATION LAGOON #3**	13	14	SPARE **AERATION LAGOON #4**	**M**			**2.9**
1	**2.9**	3	20	**M**	**MOTORIZED AIR VALVE**	15	16	**MOTORIZED AIR VALVE**	**M**	3	20	**2.9** 1
	2.9			**M**	**AL-MBFV-230**	17	18	**AL-MBFV-240**	**M**			**2.9**
						19	20					
		3	20		SPARE	21	22	SPARE		3	20	
						23	24					
						25	26					
		3	20		SPARE	27	28	SPARE		3	20	
						29	30					
		1	15		SPARE	31	32	SPARE		1	15	1
		1	15		CONTROL ROOM - INSTA HOT BATHROOM	33	34	SPARE		1	15	
		1	15		SPARE	35	36	SPARE		1	15	
		1	15		SPARE	37	38	SPARE		1	15	
		1	20		SPARE	39	40	SPARE		1	20	
		1	20		SPARE	41	42	SPARE		1	20	

CODE DESCRIPTION:	CONNECTED LOAD KVA:	*DEMAND:	PHASE SUMMARY:	KVA	AMPS
L = LIGHTING	0.0	0.0	A-PHASE:	5.9	21.2
R = RECEPTS	0.0	0.0	B-PHASE:	5.9	21.2
M = MOTORS	17.6	17.6	C-PHASE:	5.9	21.2
H = HEATING	0.0	0.0	THREE-PHASE:	17.6	21.2
K = MISCELLANEOUS	0.0	0.0	25% FUTURE GROWTH:	4.4	5.3
	17.6	17.6	TOTAL CONNECTED LOAD:	22.0	26.5
			MAIN BUS SIZING @125% CONNECTED LOAD:	27.5	26.5
			TOP FED / BOTTOM FED:	-	
			DOOR-IN-DOOR COVER:	-	

* DEMAND VALUES ARE BASED ON THE LATEST NEC - ARTICLE 220
ENCLOSURE DIMENSIONS:

EX. P&B BLDG NO.1 - EX. PANEL - LPPB1

VOLTAGE: 240/120 | BUS RATING: 100 | NEMA ENCLOSURE TYPE: 12
PHASES: 1-PH, 3-W + G | NEUTRAL BUS RATING: 100 | LOCATION: ELEC RM IPC CABINET
KAIC: 22 | MOUNTING: SURFACE | ACCESSORIES: -
MAINS: 100A. MCB | FED FROM: PPPB1 VIA XFMR LT-PB1 | -

	KVA	BREAKER POLE	BREAKER TRIP	CODE	ROOM # - LOAD DESCRIPTION	POLE	POLE	ROOM # - LOAD DESCRIPTION	CODE	BREAKER POLE	BREAKER TRIP	KVA
		1	15		HTC-CL1	1	2	RECEPTS - SECONDARY CLARIFIER		1	15	
		1	15		HTC-CL2	3	4	DO PROBE AIT-231		1	15	
		1	15		FLOW METER FIT	5	6	DO PROBE AIT-232		1	15	
		1	15		FLOW METER FIT	7	8	BLOWER PBB-B-621 FAN MSCP		1	20	
		1	15		FLOW METER FE/FIT-641	9	10	BLOWER PBB-B-622 FAN MSCP		1	20	
		1	15		FLOW METER FE/FIT-642	11	12	BLOWER PBB-B-623 FAN MSCP		1	20	
		1	15		FLOW METER FE/FIT-643	13	14	SPARE **BIOLAC CONTROL PANEL CP02**	**K**	1	**30**	**2.9** 2
		1	15		FLOW METER FE/FIT-711	15	16	SPARE **DO SENSOR AL-D0-901 CP**	**K**	1	15	**0.2** 1
		1	30		BIOLAC CONTROL PANEL CP01	17	18	RECEPTS - SCUM VALVE VAULT		1	15	
		1	20		PCS CABINET PCS-PBB CKT A	19	20	RECEPTS - AERATION LAGOONS		1	15	
		1	20		PCS CABINET PCS-PBB CKT B	21	22	RECEPTS - CLARIFIER DIST. BOX		1	15	
		1	15		RECEPTS - PBB-AC-651	23	24	RECEPTS - PBB ELECTRICAL ROOM		1	15	
		1	15		RECEPTS - PBB-AC-652 & PUMP ROOM	25	26	RECEPTS - PBB BLOWER AREA		1	15	
		1	15		RECEPTS - PBB PUMP ROOM	27	28	RECEPTS - PBB CONTROL ROOM		1	15	
		1	15		RECEPTS - AERATION LAGOONS	29	30	LTG CONTROL PANEL LCP-PB		1	15	
		1	15		EXHAUST FAN PBB-EF-672	31	32	TELEPHONE TERMINATION CABINET (TTP)		1	20	
		1	20		TOILET INSTANT WATER HEATER	33	34	GRINDER PUMP CP		2	20	
1	**0.1**	1	20	**M**	SPARE **BLOWER PBB-B-624 FAN MSCP**	35	36					
1	**0.1**	1	20	**M**	SPARE **BLOWER PBB-B-625 FAN MSCP**	37	38	WALL PACKS EXTERIOR P & BB		1	15	
		2	20		CONTROL ROOM-AC-650	39	40	SPARE **RECEPTS - AERATION LAGOONS #3 & #4**	**R**	1	15	1.1 1
						41	42	SPARE	**K**	1	15	**0.2** 1

CODE DESCRIPTION:	CONNECTED LOAD KVA:	*DEMAND:	PHASE SUMMARY:	KVA	AMPS
L = LIGHTING	0.0	0.0	A-PHASE:	3.0	25.2
R = RECEPTS	1.1	1.1	B-PHASE:	1.3	10.7
M = MOTORS	0.3	0.3	C-PHASE:	0.3	2.8
H = HEATING	0.0	0.0	THREE-PHASE:	4.6	12.9
K = MISCELLANEOUS	3.3	3.0	25% FUTURE GROWTH:	1.2	3.2
	4.6	4.3	TOTAL CONNECTED LOAD:	5.8	16.1
			MAIN BUS SIZING @125% CONNECTED LOAD:	7.3	20.1
			TOP FED / BOTTOM FED:	-	
			DOOR-IN-DOOR COVER:	-	

* DEMAND VALUES ARE BASED ON THE LATEST NEC - ARTICLE 220
ENCLOSURE DIMENSIONS:

AERATION LAGOONS NO.3 AND NO.4 MINI-POWER ZONEL - PANEL - LPAB (NEW)

VOLTAGE: 208/120 | BUS RATING: 100 | NEMA ENCLOSURE TYPE: 4X
PHASES: 3-PH, 4-W + G | NEUTRAL BUS RATING: 100 | LOCATION: AERATION DISTR. BOX
KAIC: 10 | MOUNTING: SURFACE | ACCESSORIES: TVSS
MAINS: 50A. MCB | FED FROM: EX MCC-PB VIA NINI-POWER ZONE XFMR | -

KVA	BREAKER POLE	BREAKER TRIP	CODE	ROOM # - LOAD DESCRIPTION	POLE	POLE	ROOM # - LOAD DESCRIPTION	CODE	BREAKER POLE	BREAKER TRIP	KVA
0.2	1	20	K	AL NO.3 - DO SENSOR AL-D0-901 CP	1	2	LTG - AL NO.3 & NO.4	L	1	20	0.2
0.2	1	20	K	AL NO.4 - DO SENSOR AL-D0-902 CP	3	4	RECS - AL NO.3 & NO.4	R	1	20	0.4
0.2	1	20	K	AIR FLOWMETER AL-FE-243	5	6	LTG - AERATION DISTR. BOX/AIR MANIFOLD	L	1	20	0.2
0.2	1	20	K	AIR FLOWMETER AL-FE-244	7	8	RECS - AERATIONDISTR. BOX/AIR MANIFOLD	R	1	20	1.1
	1	20		SPARE	9	10	SPARE		1	20	
	1	20		SPARE	11	12	SPARE		1	20	
	1			SPACE	13	14	SPACE		1		
	1			SPACE	15	16	SPACE		1		
	1			SPACE	17	18	SPACE		1		
	1			SPACE	19	20	SPACE		1		
	1			SPACE	21	22	SPACE		1		
	1			SPACE	23	24	SPACE		1		

CODE DESCRIPTION:	CONNECTED LOAD KVA:	*DEMAND:	PHASE SUMMARY:	KVA	AMPS
L = LIGHTING	0.5	0.5	A-PHASE:	1.7	14.3
R = RECEPTS	1.4	1.4	B-PHASE:	0.6	4.7
M = MOTORS	0.0	0.0	C-PHASE:	0.4	3.6
H = HEATING	0.0	0.0	THREE-PHASE:	2.7	7.5
K = MISCELLANEOUS	0.8	0.6	25% FUTURE GROWTH:	0.7	1.9
	2.7	2.5	TOTAL CONNECTED LOAD:	3.4	9.4
			MAIN BUS SIZING @125% CONNECTED LOAD:	4.2	11.7
			TOP FED / BOTTOM FED:	-	
			DOOR-IN-DOOR COVER:	-	

* DEMAND VALUES ARE BASED ON THE LATEST NEC - ARTICLE 220
ENCLOSURE DIMENSIONS:

GENERAL SHEET NOTES

1. SEE DRAWING E00.01 FOR ELECTRICAL LEGEND.
2. SEE DRAWING E00.02 FOR GENERAL NOTES AND ABBREVIATIONS.
3. EXISTING PANEL SCHEDULES NEW WORK IS SHOWN IN BOLD TEXT.

SHEET KEY NOTES

1 USE EXISTING CIRCUIT BREAKER AND PROVIDE BRANCH CIRCUIT TO EQUIPMENT AS INDICATED. UPDATE PANEL SCHEDULE FOR NEW LOAD DESCRIPTION.

2 REPLACE EXISTING 15A SPARE CIRCUIT BREAKER WITH NEW 30A CIRCUIT BREAKER WITH AIC RATING TO MATCH EXISTING. PROVIDE BRANCH CIRCUIT TO EQUIPMENT AS INDICATED. UPDATE PANEL SCHEDULE FOR NEW LOAD DESCRIPTION.

REVISIONS

CLIENT INFORMATION

SUSSEX COUNTY, DE
ENGINEERING
DEPARTMENT

INLAND BAYS RWF
PHASE #2 EXPANSION:
CONTRACT S19-10

KEY PLAN

GRAPHIC SCALES

SIGNATURE

IL HWAN KIM
LICENSE
No. 19294
DELAWARE
PROFESSIONAL ENGINEER
12-14-18

Whitman, Requardt & Associates, LLP
801 South Caroline Street, Baltimore, Maryland 21231

ELECTRICAL
PANEL SCHEDULES

DRAWING NO.

E00.13

SCALE: NONE		
DATE: DEC. 2018	SHEET 145 OF 217	
DES: JPS	DRAWN: SMC	CHECK: IHK

PLOT DATE: 12/14/2018 3:59:41 PM PAGE SETUP: WRA-PDF CB(24) PLOT STYLE: WRA_2006CTB PAPER SIZE:ARCH FULL BLEED D (36.00 X 24.00 INCHES)
N:\14256-028\CADD\14256028E00-13.dwg

PUMP AND BLOWER BLDG NO.2 PANEL - LPB2 [1]

VOLTAGE: 208/120 | BUS RATING: 250 | NEMA ENCLOSURE TYPE: 12
PHASES: 3-PH, 4-W + G | NEUTRAL BUS RATING: 250 | LOCATION: RM 109
KAIC: 10 | MOUNTING: SURFACE | ACCESSORIES: TVSS
MAINS: 250A ,MCB | FED FROM: SWBDFI VIA XFMR TB2 | -

KVA	BREAKER POLE	BREAKER TRIP	CODE	ROOM # - LOAD DESCRIPTION	POLE	POLE	ROOM # - LOAD DESCRIPTION	CODE	BREAKER POLE	BREAKER TRIP	KVA
1.9	1	20	R	801 INSTRUMENTATION PANEL PCS-PB2	1	2	EXTERIOR LIGHTING	L	1	20	1.2
0.1	1	20	R	802 PBB2-FIT-901, PBB2-FIT-902, PBB2-FIT-903	3	4	801 LIGHING	L	1	20	0.5
0.1	1	20	R	802 PBB2-FIT-904, PBB2-FIT-905	5	6	802 LIGHTING	L	1	20	0.5
3.3	2	60	M	SPLIT A/C UNIT PPB2-CU-101 (801),	7	8	EXTERIOR RECS	R	1	20	0.7
3.3			M	PPB2-AC-101 (OUTSIDE)	9	10	EXTERIOR RECS	R	1	20	0.7
3.3	2	60	M	SPLIT A/C UNIT PPB2-CU-102 (801),	11	12	801 RECS	R	1	20	0.7
3.3			M	PPB2-AC-102 (OUTSIDE)	13	14	801 RECS	R	1	20	0.5
1.0	1	20	M	802 CP PBB2-VCP-101 (PUMP RM)	15	16	802 RECS	R	1	20	0.9
1.0	1	20	M	801 CP PBB2-VCP-102 (ELECT. RM)	17	18	802 RECS	R	1	20	0.9
	1	20		SPARE	19	20	801 LTG CP LCP-PB2	L	1	20	0.3
	1	20		SPARE	21	22	SPARE		1	20	
	1	20		SPARE	23	24	SPARE		1	20	
	1	20		SPARE	25	26	SPARE		1	20	
	1	20		SPARE	27	28	SPARE		1	20	
	1	20		SPARE	29	30	SPARE		1	20	
	1			SPACE	31	32	SC - LIGHTING	L	1	20	0.2
	1			SPACE	33	34	SC - RECS	R	1	20	0.7
	1			SPACE	35	36	SC - VAULT SUMP PUMP SPS2-SP-101 REC	M	1	20	0.5
	1			SPACE	37	38	SC - HEAT TRACE SYSTEM SC-HT-101	H	1	20	1.9
	1			SPACE	39	40	SC - HEAT TRACE SYSTEM GF-HT-102	H	1	20	1.9
	1			SPACE	41	42	SPARE		1	20	

CODE DESCRIPTION:	CONNECTED LOAD KVA:	*DEMAND:
L = LIGHTING	2.7	2.7
R = RECEPTS	7.3	7.3
M = MOTORS	15.6	15.6
H = HEATING	3.8	3.8
K = KITCHEN	0.0	0.0
	29.4	29.4

PHASE SUMMARY:	KVA	AMPS
A-PHASE:	13.3	110.6
B-PHASE:	9.2	76.4
C-PHASE:	7.0	58.2
THREE-PHASE:	29.4	81.7
25% FUTURE GROWTH:	7.4	20.4
TOTAL CONNECTED LOAD:	36.8	102.2
MAIN BUS SIZING @125% CONNECTED LOAD:	46.0	127.7
TOP FED / BOTTOM FED:	-	
DOOR-IN-DOOR COVER:	-	

* DEMAND VALUES ARE BASED ON THE LATEST NEC - ARTICLE 220
ENCLOSURE DIMENSIONS:

FILTERED IRRIGATION PUMP STATION BLDG - PANEL LPFI [2]

VOLTAGE: 208/120 | BUS RATING: 250 | NEMA ENCLOSURE TYPE: 12
PHASES: 3-PH, 4-W + G | NEUTRAL BUS RATING: 250 | LOCATION: RM 109
KAIC: 10 | MOUNTING: SURFACE | ACCESSORIES: TVSS
MAINS: 250A ,MCB | FED FROM: SWBDFI VIA XFMR TFI | -

KVA	BREAKER POLE	BREAKER TRIP	CODE	ROOM # - LOAD DESCRIPTION	POLE	POLE	ROOM # - LOAD DESCRIPTION	CODE	BREAKER POLE	BREAKER TRIP	KVA	
2.6	2	25	M	SPLIT A/C UNIT FIPS-AC-101 (901),	1	2	EXTERIOR LIGHTING	L	1	20	0.9	
2.6			M	FIPS-CU-101 (OUTSIDE)	3	4	901 LIGHING	L	1	20	0.7	
2.6	2	25	M	SPLIT A/C UNIT FIPS-AC-102 (901),	5	6	902 LIGHTING	L	1	30	1.8	
2.6			M	FIPS-CU-102 (OUTSIDE)	7	8	EXTERIOR RECS	R	1	20	1.1	
2.6	2	25	M	SPLIT A/C UNIT FIPS-AC-103 (901),	9	10	EXTERIOR RECS	R	1	20	0.9	
2.6			M	FIPS-CU-103 (OUTSIDE)	11	12	901 RECS	R	1	20	0.5	
1.9	1	20	R	901 INSTRUMENTATION PANEL PCS-FI	13	14	901 RECS	R	1	20	0.5	
1.0	1	20	M	902 CP FIPS-VCP-101 (PUMP RM)	15	16	902 RECS	R	1	20	1.1	
1.0	1	20	M	901 CP FIPS-VCP-102 (ELECT. RM)	17	18	902 RECS	R	1	20	1.1	
1.0	1	20	R	902 PRE-FILTER FIPS-PF-101 CP	19	20	901 LTG CP LCP-FI	L	1	20	0.3	
1.2	1	20	M	901 FIPS-EF-101	21	22	902 LIGHTING	L	1	20	1.2	
1.0	1	20	R	902 REC FIPS-CMP-101, FIPS-CMP-102	23	24	901 FIPS-FIT-901, FIPS-FIT-902	K	1	20	0.1	
1.0	1	20	K	FILTER MASTER PANEL FIPS-MPF-101	25	26	SPARE		1	20		
1.0	1	20	M	CP FIPS-DPP-101	27	28	SPARE		1	20		
	1	20		SPARE	29	30	SPARE		1	20		
0.3	1	20	L	NHW - LIGHTING	31	32	GF- LIGHTING	L	1	20	0.4	
0.7	1	20	R	NHW - RECS	33	34	GF- REC.	R	1	20	1.1	
0.2	1	20	R	NHW - REC. COMPOSIT SAMPLER	35	36	GF- HEAT TRACE SYSTEM SC-HT-101	H	1	20	1.9	[3]
1.9	1	20	H	NHW - HEAT TRACE SYSTEM NHW-HT-101	37	38	GF- HEAT TRACE SYSTEM SC-HT-102	H	1	20	1.9	[3]
	1	20		SPARE	39	40	SPARE		1	20		
	1	20		SPARE	41	42	SPARE		1	20		
4.2	2	20	H	902 INSTANTANEOUS WATER HEATER	43	44	SPARE		1	20		
4.2			H		45	46	SPARE		1	20		
0.2	1	20	K	GENERATOR REMOTE ANNUNCIATOR PNL	47	48	SPARE		1	20		
8.1					49	50	SPACE		1			
4.5	3	100		FIPS GENERATOR ENCLOSURE PANEL LPFIG	51	52	SPACE		1			
3.9					53	54	SPACE		1			

[3] — PROVIDE BRANCH CIRCUIT 2#10, 1#10G IN 3 /4"C FOR LOAD.

CODE DESCRIPTION:	CONNECTED LOAD KVA:	*DEMAND:
L = LIGHTING	5.776	5.8
R = RECEPTS	11.30	10.7
M = MOTORS	19.6	19.6
H = HEATING	14.000	14.0
K = KITCHEN	1.3	1.3
	52.0	51.3

PHASE SUMMARY:	KVA	AMPS
A-PHASE:	16.4	136.3
B-PHASE:	14.1	117.3
C-PHASE:	12.8	106.8
THREE-PHASE:	43.2	120.1
25% FUTURE GROWTH:	10.8	30.0
TOTAL CONNECTED LOAD:	54.0	150.1
MAIN BUS SIZING @125% CONNECTED LOAD:	67.6	187.7
TOP FED / BOTTOM FED:	-	
DOOR-IN-DOOR COVER:	-	

* DEMAND VALUES ARE BASED ON THE LATEST NEC - ARTICLE 220
ENCLOSURE DIMENSIONS:

GENERATOR PANEL LPFIG SCHEDULE [2]

VOLTAGE: 208/120 | BUS RATING: 100 | NEMA ENCLOSURE TYPE: 1
PHASES: 3-PH, 4-W + G | NEUTRAL BUS RATING: 100 | LOCATION: GEN. ENCLOSURE
KAIC: 10 | MOUNTING: SURFACE | ACCESSORIES: TVSS
MAINS: 100A | FED FROM: RM 901 LPFI | -

KVA	BREAKER POLE	BREAKER TRIP	CODE	ROOM # - LOAD DESCRIPTION	POLE	POLE	ROOM # - LOAD DESCRIPTION	CODE	BREAKER POLE	BREAKER TRIP	KVA
1.2	1	20	H	GENERATOR BATTERY CHARGER	1	2	GENERATOR JACKET WATER HEATER #1	H	2	40	3.2
1.2	1	20	H	GENERATOR BATTERY HEATER	3	4		H			3.2
0.5	1	20	H	GENERATOR CONTROL PANEL	5	6	GENERATOR JACKET WATER HEATER #2	H	2	40	3.2
0.5	1	20	H	GENERATOR CONTROL PANEL HEATER	7	8		H			3.2
0.1	1	20	L	GEN. ENCLOSURE INTERIOR LIGHTS	9	10	SPARE		1	20	
0.2	1	20	R	EXTERIOR RECEPTACLE	11	12	SPARE		1	20	
	1	20		SPARE	13	14	SPACE		1		
	1	20		SPARE	15	16	SPACE		1		
	1			SPACE	17	18	SPACE		1		

CODE DESCRIPTION:	CONNECTED LOAD KVA:	*DEMAND:
L = LIGHTING	0.1	0.1
R = RECEPTS	0.2	0.2
M = MOTORS	0.0	0.0
H = HEATING	16.2	16.2
K = KITCHEN	0.0	0.0
	16.5	16.5

PHASE SUMMARY:	KVA	AMPS
A-PHASE:	8.1	67.7
B-PHASE:	4.5	37.4
C-PHASE:	3.9	32.4
THREE-PHASE:	16.5	45.8
25% FUTURE GROWTH:	4.1	11.5
TOTAL CONNECTED LOAD:	20.6	57.3
MAIN BUS SIZING @125% CONNECTED LOAD:	25.8	71.6
TOP FED / BOTTOM FED:	-	
DOOR-IN-DOOR COVER:	-	

* DEMAND VALUES ARE BASED ON THE LATEST NEC - ARTICLE 220
ENCLOSURE DIMENSIONS:

GENERAL SHEET NOTES

1. SEE DRAWING E00.01 FOR ELECTRICAL LEGEND.
2. SEE DRAWING E00.02 FOR GENERAL NOTES AND ABBREVIATIONS.

SHEET KEY NOTES

[1] SEE PUMP AND BLOWER BUILDING NO. 2 ONE LINE DIAGRAM ON DRAWING E00.08 FOR EQUIPMENT RATINGS AND FEEDER REQUIREMENTS.

[2] SEE FILTERED IRRIGATION PUMP STATION ONE LINE DIAGRAM ON DRAWING E00.10 FOR EQUIPMENT RATINGS AND FEEDER REQUIREMENTS.

[3] PROVIDE BRANCH CIRCUIT 2#10, 1#10G IN 3 /4"C FOR LOAD.

REVISIONS

CLIENT INFORMATION

SUSSEX COUNTY, DE
ENGINEERING
DEPARTMENT

INLAND BAYS RWF
PHASE #2 EXPANSION:
CONTRACT S19-10

KEY PLAN

GRAPHIC SCALES

SIGNATURE

IL HWAN KIM
LICENSE
No. 19294
DELAWARE
PROFESSIONAL ENGINEER
12-14-18

Whitman, Requardt & Associates, LLP
801 South Caroline Street, Baltimore, Maryland 21231

ELECTRICAL
PANEL SCHEDULES

DRAWING NO.

E00.14

SCALE: NONE		
DATE: DEC. 2018	SHEET 146 OF 217	
DES: JPS	DRAWN: SMC	CHECK: IHK

PLOT DATE: 12/14/2018 3:09:11 PM PAGE SETUP: WRA-PDF C60X240 PLOT STYLE: WRA_2006.CTB PAPER SIZE:ARCH FULL BLEED D (36.00 X 24.00 INCHES)
N:\14256-026\CADD\14256026D00-14.dwg

EX. ELECTRICAL BLDG NO.2 - EX. PANEL PPSH1

VOLTAGE: 480/277 | BUS RATING: 250 | NEMA ENCLOSURE TYPE: 12
PHASES: 3-PH, 4-W + G | NEUTRAL BUS RATING: 250 | LOCATION: EX IPC POWER CABINET
KAIC: 35 | MOUNTING: SURFACE | ACCESSORIES: -
MAINS: 250A ,MCB | FED FROM: EX SWBD SB-1 | -

KVA	BREAKER POLE	BREAKER TRIP	CODE	ROOM # - LOAD DESCRIPTION	POLE	POLE	ROOM # - LOAD DESCRIPTION	CODE	BREAKER POLE	BREAKER TRIP	KVA
					1	2					
	3	20		UNIT HEATER	3	4	XFMR LT-SH1/LPSH1		3	30	
					5	6					
					7	8					
	3	20		SOD HYPO BUILDING UNIT HEATER SHF-EUH-951	9	10	INTERMEDIATE PUMP CCT-IP-812 SSRV CP		3	50	
					11	12					
					13	14					
	3	20		SOD HYPO BUILDING HOT WATER HEATER SHF-WH-931	15	16	INTERMEDIATE PUMP CCT-IP-813 SSRV CP		3	50	
					17	18					
					19	20					
	3	50		INTERMEDIATE PUMP CCT-IP-811 SSRV CP	21	22	RAPID MIXER CCT-RM-801 SSRV CP		3	50	
					23	24					
7.2			M		25	26					
1 7.2	3	20 50	M	~~SPARE~~ **INTERMEDIATE PUMP CCT-IP-814 SSRV CP**	27	28	SPARE		3	20	
7.2			M		29	30					
	1	20		SPARE	31	32	SPARE		1	20	
	1	20		SPARE	33	34	LTG - CHLORINE CONTACT TANK		1	20	
	1	20		SPARE	35	36	LTG - SOD HYPO TANK		1	20	
	1	20		SPARE	37	38	LTG - SOD HYPO BUILDING (EXT)		1	20	
	2	20		SPARE TO TROUGH - CHEMICAL BUILDING	39	40	LTG - SOD HYPO BUILDING (INT)		1	20	
					41	42	LTG - ELECTRICAL BUILDING		1	20	

CODE DESCRIPTION:	CONNECTED LOAD KVA:	*DEMAND:	PHASE SUMMARY:	KVA	AMPS
L = LIGHTING	0.0	0.0	A-PHASE:	7.2	25.9
R = RECEPTS	0.0	0.0	B-PHASE:	7.2	25.9
M = MOTORS	21.5	21.5	C-PHASE:	7.2	25.9
H = HEATING	0.0	0.0	THREE-PHASE:	21.5	25.9
K = KITCHEN	0.0	0.0	25% FUTURE GROWTH:	5.4	6.5
	21.5	21.5	TOTAL CONNECTED LOAD:	26.9	32.3
			MAIN BUS SIZING @125% CONNECTED LOAD:	33.6	32.3
			TOP FED / BOTTOM FED:	-	
			DOOR-IN-DOOR COVER:	-	

* DEMAND VALUES ARE BASED ON THE LATEST NEC - ARTICLE 220
ENCLOSURE DIMENSIONS:

EX. ELECTRICAL BLDG NO.2 - EX. PANEL LPSH1

VOLTAGE: 208/120 | BUS RATING: 250 | NEMA ENCLOSURE TYPE: 12
PHASES: 3-PH, 4-W + G | NEUTRAL BUS RATING: 250 | LOCATION: EX IPC POWER CABINET
KAIC: 35 | MOUNTING: SURFACE | ACCESSORIES: -
MAINS: 250A ,MCB | FED FROM: EX SWBD SB-1 | -

KVA	BREAKER POLE	BREAKER TRIP	CODE	ROOM # - LOAD DESCRIPTION	POLE	POLE	ROOM # - LOAD DESCRIPTION	CODE	BREAKER POLE	BREAKER TRIP	KVA
	2	20		WELL PUMP MSCP	1	2	SODIUM HYPO EXT. LIGHT		1	15	
					3	4	**SPARE CHEMICAL PUMP SHF-SHP-905**		1	15	0.2 2
	2	20		SPARE	5	6	SPARE		2	15	
					7	8					
	2	20		SPARE	9	10	SPARE		2	15	
					11	12					
	2	20		SPARE	13	14	SPARE		2	15	
					15	16					
	2	20		SPARE	17	18	SPARE		2	15	
					19	20					
2 0.2	1	15		~~SPARE~~ **CHEMICAL PUMP SHF-SHP-904**	21	22	**SPARE FLOWMETER VAULT (FIT-712)**		1	20	0.1 2
	1	20		ELEC. #2 EXT. LIGHTS WPI	23	24	PROCESS CONTROL SYSTEM CKT 1		1	20	
	1	15		LTG CONTROL PANEL LCP-EB2	25	26	PROCESS CONTROL SYSTEM CKT 2		1	20	
	1	15		CHEMICAL PUMP SHF-SHP-901	27	28	RECS - CHLORINE CONTACT TANK		1	20	
	1	15		CHEMICAL PUMP SHF-SHP-902	29	30	CHEMICAL SUMP PUMP MSCP		1	20	
	1	15		CHEMICAL PUMP SHF-SHP-903	31	32	RECS - METER VAULT SUMP PUMP		1	20	
	1	15		FLOWMETER VAULT (FIT-711)	33	34	RECS - SOD HYPO TANK (EXT)		1	20	
	1	15		CHEMBLDG WATER/SOD HYPO SUMP HT	35	36	RECS - SOD HYPO BUILDING (EXT)		1	20	
	1	15		1" CHEMICAL/PIPE C.C.T. HT	37	38	RECS - SOD HYPO BUILDING (INT)		1	20	
	1	20		SOD HYPO BUILDING EXHAUST FAN	39	40	RECS - ELECTRICAL BUILDING (EXT)		1	20	
	1	20		CHEMICAL FILL STATION CP (FIT-731)	41	42	RECS - ELECTRICAL BUILDING (EXT)		1	20	

CODE DESCRIPTION:	CONNECTED LOAD KVA:	*DEMAND:	PHASE SUMMARY:	KVA	AMPS
L = LIGHTING	0.0	0.0	A-PHASE:	0.0	0.0
R = RECEPTS	0.0	0.0	B-PHASE:	0.5	4.0
M = MOTORS	0.0	0.0	C-PHASE:	0.0	0.0
H = HEATING	0.0	0.0	THREE-PHASE:	0.5	1.3
K = KITCHEN	0.0	0.0	25% FUTURE GROWTH:	0.1	0.3
	0.0	0.0	TOTAL CONNECTED LOAD:	0.6	1.7
			MAIN BUS SIZING @125% CONNECTED LOAD:	0.8	2.1
			TOP FED / BOTTOM FED:	-	
			DOOR-IN-DOOR COVER:	-	

* DEMAND VALUES ARE BASED ON THE LATEST NEC - ARTICLE 220
ENCLOSURE DIMENSIONS:

FILTRATION FACILITY PANEL - PPFF 3

VOLTAGE: 480/277 | BUS RATING: 225 | NEMA ENCLOSURE TYPE: 12
PHASES: 3-PH, 4-W + G | NEUTRAL BUS RATING: 225 | LOCATION: ELEC EQUIP CAB - FILT FAC
KAIC: 65 | MOUNTING: SURFACE | ACCESSORIES: -
MAINS: 200A MCB | FED FROM: EX. MCC-SDB - SOLIDS DEWATERING BLDG. | -

KVA	BREAKER POLE	BREAKER TRIP	CODE	ROOM # - LOAD DESCRIPTION	POLE	POLE	ROOM # - LOAD DESCRIPTION	CODE	BREAKER POLE	BREAKER TRIP	KVA
6.0			M					M			6.0
6.0	3	25	M	FILTER #1 CONTROL PANEL	1	2	FILTER #2 CONTROL PANEL	M	3	25	6.0
6.0			M					M			6.0
6.0			M					M			6.0
6.0	3	25	M	FILTER #3 CONTROL PANEL	3	4	FILTER #4 CONTROL PANEL	M	3	25	6.0
6.0			M					M			6.0
3.3			H					H			3.3
3.3	3	20	H	UNIT HEATER FF- EUH-101	5	6	UNIT HEATER FF-EUH-102	H	3	20	3.3
3.4			H					H			3.4
	3			SPACE	7	8	SPACE		3		
	3			SPACE	9	10	SPACE		3		
	3			SPACE	11	12	SPACE		3		
5.0			K								
5.0	3	40	K	XFMR TFI (PNL LPFF)	13	14	SPACE		3		
5.0			K								

CODE DESCRIPTION:	CONNECTED LOAD KVA:	*DEMAND:	PHASE SUMMARY:	KVA	AMPS
L = LIGHTING	0.0	0.0	A-PHASE:	35.6	128.5
R = RECEPTS	0.0	0.0	B-PHASE:	35.6	128.5
M = MOTORS	72.0	72.0	C-PHASE:	35.8	129.2
H = HEATING	20.0	20.0	THREE-PHASE:	107.0	128.8
K = MISCELLANEOUS	15.0	13.5	15% FUTURE GROWTH:	16.1	19.3
	107.0	105.5	TOTAL CONNECTED LOAD:	123.1	148.1
			MAIN BUS SIZING @125% CONNECTED LOAD:	153.8	148.1
			TOP FED / BOTTOM FED:	-	
			DOOR-IN-DOOR COVER:	-	

* DEMAND VALUES ARE BASED ON THE LATEST NEC - ARTICLE 220
ENCLOSURE DIMENSIONS:

FILTRATION FACILITY PANEL - LPFF 3

VOLTAGE: 208/120 | BUS RATING: 125 | NEMA ENCLOSURE TYPE: 3R
PHASES: 3-PH, 4-W + G | NEUTRAL BUS RATING: 125 | LOCATION: ELEC EQUIP CAB - FILT FAC
KAIC: 22 | MOUNTING: SURFACE | ACCESSORIES: -
MAINS: 60A ,MCB | FED FROM: PNL PPFF VIA MINI POWER ZONE XFMR | -

KVA	BREAKER POLE	BREAKER TRIP	CODE	ROOM # - LOAD DESCRIPTION	POLE	POLE	ROOM # - LOAD DESCRIPTION	CODE	BREAKER POLE	BREAKER TRIP	KVA
0.6	1	20	L	PUMP ROOM LIGHTS	1	2	PUMP ROOM LIGHTS	L	1	20	0.6
0.6	1	20	R	PUMP ROOM RECEPTACLES	3	4	PUMP ROOM RECEPTACLES	R	1	20	0.6
0.7	1	20	M	VENTILATION CONTROL PANEL #1	5	6	VENTILATION CONTROL PANEL #2	M	1	20	0.7
1.2	1	20	M	PUMP ROOM SUMP PUMP	7	8	PUMP ROOM SUMP PUMP	M	1	20	1.2
0.8	1	20	L	EXTERIOR LIGHTS	9	10	EXTERIOR RECEPTACLES	R	1	20	0.8
0.2	1	20	L	CABINET LIGHT AND RECEPTACLE	11	12	CABINET HEATER AND FAN	H	1	20	1.0
	1	20		SPARE	13	14	SPARE		1	20	
	1			SPACE	15	16	SPACE		1		
	1			SPACE	17	18	SPACE		1		
	1			SPACE	19	20	SPACE		1		
	1			SPACE	21	22	SPACE		1		
	1			SPACE	23	24	SPACE		1		

CODE DESCRIPTION:	CONNECTED LOAD KVA:	*DEMAND:	PHASE SUMMARY:	KVA	AMPS
L = LIGHTING	2.2	2.2	A-PHASE:	3.6	30.0
R = RECEPTS	2.0	2.0	B-PHASE:	2.8	23.3
M = MOTORS	3.8	3.8	C-PHASE:	2.6	21.7
H = HEATING	1.0	1.0	THREE-PHASE:	9.0	25.0
K = KITCHEN	0.0	0.0	15% FUTURE GROWTH:	1.4	3.8
	9.0	9.0	TOTAL CONNECTED LOAD:	10.4	28.8
			MAIN BUS SIZING @125% CONNECTED LOAD:	12.9	35.9
			TOP FED / BOTTOM FED:	-	
			DOOR-IN-DOOR COVER:	-	

* DEMAND VALUES ARE BASED ON THE LATEST NEC - ARTICLE 220
ENCLOSURE DIMENSIONS:

GENERAL SHEET NOTES

1. SEE DRAWING E00.01 FOR ELECTRICAL LEGEND.
2. SEE DRAWING E00.02 FOR GENERAL NOTES AND ABBREVIATIONS.
3. EXISTING PANEL DATA IN SHOWN IN LIGHT TEXT, NEW PANEL DATA IS SHOWN IN BOLD TEXT. CONTRACTOR TO VERIFIED EXISTING CONDITION PRIOR TO PERFORMING ANY NEW WORK.

SHEET KEY NOTES

1. REMOVE EXISTING 3P-20A CIRCUIT BREAKER AND PROVIDE NEW CIRCUIT BREAKER AS INDICATED. NEW CIRCUIT BREAKER TO MATCH EXISTING AIC RATING AND MANUFACTURER. SEE ONE LINE DIAGRAM 1/E00.06 FOR INTERMEDIATE PUMP CCT-IP-814 SSRV CP FEEDER REQUIREMENTS.
2. USE EXISTING CIRCUIT BREAKER AND PROVIDE NEW BRANCH CIRCUIT AS INDICATED ON DRAWING E10.01.
3. PANEL LOCATED IN FILTRATION FACILITY ELECTRICAL EQUIPMENT CABINET, SEE DRAWING E12.01 FOR FEEDER AND BRANCH CIRCUIT REQUIREMENTS.

REVISIONS

CLIENT INFORMATION

SUSSEX COUNTY, DE
ENGINEERING
DEPARTMENT

INLAND BAYS RWF
PHASE #2 EXPANSION:
CONTRACT S19-10

KEY PLAN

GRAPHIC SCALES

SIGNATURE

I. HKAN KIK TOGENSEN
No. 15204
DELAWARE
PROFESSIONAL ENGINEER
7-10-19

WRA
Whitman, Requardt & Associates, LLP
801 South Caroline Street, Baltimore, Maryland 21231

ELECTRICAL
PANEL SCHEDULES

DRAWING NO.

E00.15

SCALE: NONE
DATE: JULY 2019 | SHEET 147 OF 229
DES: JPS | DRAWN: SMC | CHECK: IHK

PLOT DATE: 7/10/2019 8:58:23 PM PAGE SETUP: VRA-PDF (36X24) PLOT STYLE: VRA_2006.CTB PAPER SIZE:ARCH FULL BLEED D (36.00 X 24.00 INCHES)
N:\14256-026\CADD\14256028D00-15.dwg

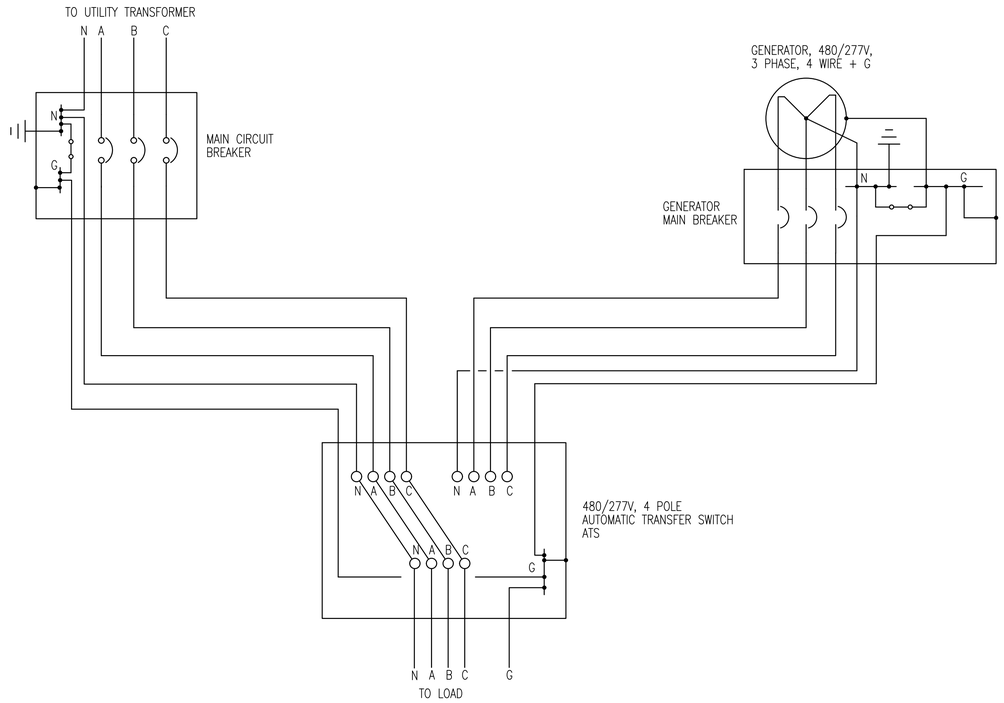

1 / E00.16 EMERGENCY GENERATOR, ATS AND MAIN CIRCUIT BREAKER CONNECTION DETAIL 3 PHASE, 4 WIRE SYSTEM

NOT TO SCALE

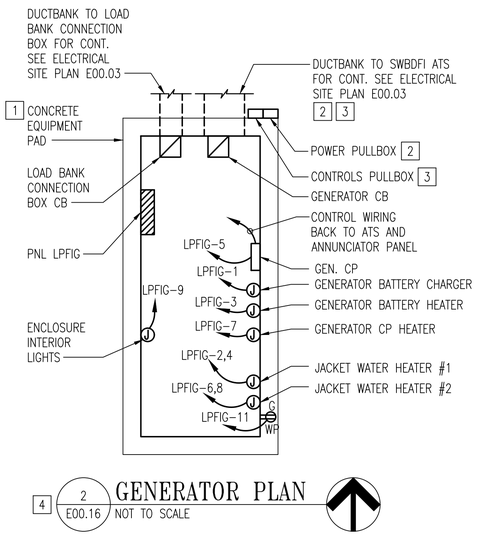

4 / 2 E00.16 GENERATOR PLAN

NOT TO SCALE

GENERAL SHEET NOTES

1. SEE DRAWING E00.01 FOR ELECTRICAL LEGEND.
2. SEE DRAWING E00.02 FOR GENERAL NOTES AND ABBREVIATIONS.
3. SEE FILTERED IRRIGATION PUMP STATION ONE LINE DIAGRAM ON DRAWING E00.10 FOR EQUIPMENT RATINGS.
4. SEE DRAWING E00.11 FOR CONDUIT AND CABLE SCHEDULE.
5. SEE DRAWING E00.03 FOR ELECTRICAL SITE PLAN.
6. SEE DRAWING E00.14 FOR PANEL LPFIG SCHEDULE.
7. THIS DRAWING IS GENERAL AND DIAGRAMMATIC. COORDINATE EXACT LOCATION OF EQUIPMENT AND CONNECTION POINTS WITH EQUIPMENT MANUFACTURER. LIGHTING PROVIDE BY GENERATOR MANUFACTURER.

SHEET KEY NOTES

1. CONCRETE PAD OVERALL LENGTH AND WIDTH SHALL BE 12" LARGER THAN GENERATOR/SOUND ENCLOSURE OUTSIDE DIMENSIONS, UNLESS OTHERWISE NOTED. REFER TO STRUCTURAL DRAWING FOR PAD CONSTRUCTION REQUIREMENTS.
2. ROUTE GENERATOR PANEL LPFIG FEEDER CONDUCTORS IN 2"C IN CONCRETE DUCTBANK FROM POWER PULL BOX LOCATED AT GENERATOR TO POWER PULL BOX IN ROOM 901. REFER TO DRAWING E09.01.
3. ROUTE CONTROL WIRING IN 2"C IN CONCRETE DUCTBANK FROM CONTROLS PULL BOX LOCATED AT GENERATOR TO CONTROLS PULL BOX IN ROOM 901. REFER TO DRAWING E09.01.
4. REFER TO 3/E00.17 FOR GENERATOR GROUNDING REQUIREMENTS.

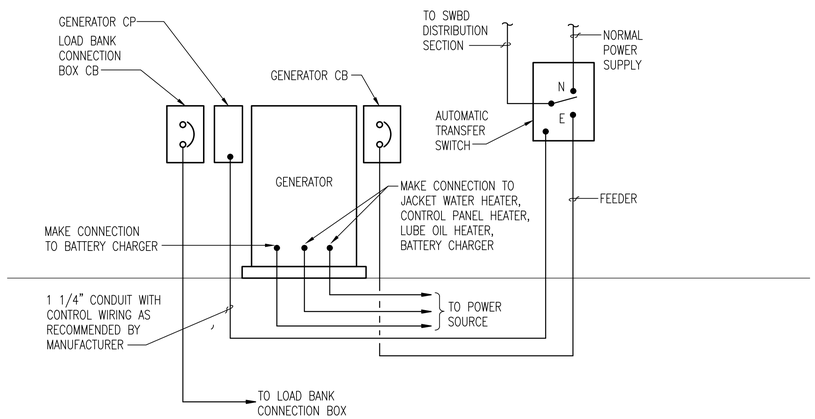

3 / E00.16 EMERGENCY GENERATOR WIRING COONECTION

NOT TO SCALE

NOTE FOR DESIGNER

CHECK WITH MANUFACTURER, KVA, PHASE, VOLTAGE FOR JACKET WATER HEATER, CONTROL PANEL HEATER, LUBE OIL HEATER, BATTERY HEATER, BATTERY CHARGER, LIGHTS.

REVISIONS		

CLIENT INFORMATION

SUSSEX COUNTY, DE ENGINEERING DEPARTMENT

INLAND BAYS RWF PHASE #2 EXPANSION: CONTRACT S19-10

KEY PLAN

GRAPHIC SCALES

SIGNATURE

IL HWAN KIM LICENSE No. 19294 DELAWARE PROFESSIONAL ENGINEER
12-14-18

Whitman, Requardt & Associates, LLP
801 South Caroline Street, Baltimore, Maryland 21231

ELECTRICAL DETAILS

DRAWING NO.

E00.16

SCALE: NONE		
DATE: DEC. 2018	SHEET 148 OF 217	
DES: JPS	DRAWN: KK	CHECK: IHK

PLOT DATE: 12/14/2018 3:59:09 PM PAGE SETUP: WRA-PDF CK6X24 PLOT STYLE: WRA_2006CTB PAPER SIZE:ARCH FULL BLEED D (36.00 X 24.00 INCHES)
N:\14256-020\CADD\14256028E00-16.dwg

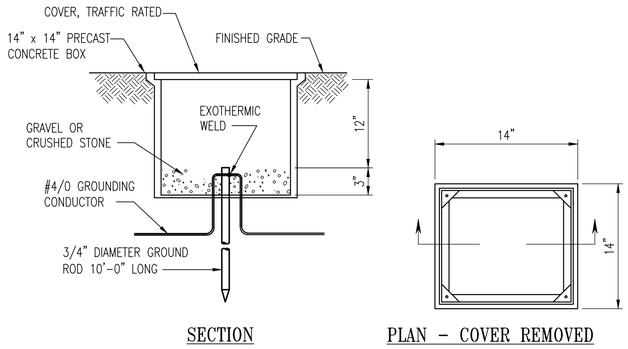

1 E00.17 GROUND ROD TYPE "A" DETAIL
NOT TO SCALE

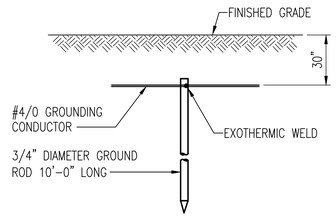

2 E00.17 GROUND ROD TYPE "B" DETAIL
NOT TO SCALE

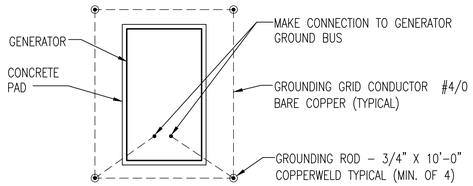

NOTE:
ALL UNDERGROUND CONNECTIONS SHALL BE EXOTHERMIC WELD

3 E00.17 EMERGENCY GENERATOR GROUNDING GRID DETAIL
NOT TO SCALE

GENERAL SHEET NOTES

1. SEE DRAWING E00.01 FOR ELECTRICAL LEGEND.
2. SEE DRAWING E00.02 FOR GENERAL NOTES AND ABBREVIATIONS.

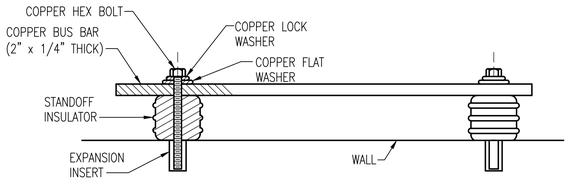

4 E00.17 GROUND BUS DETAIL
NOT TO SCALE

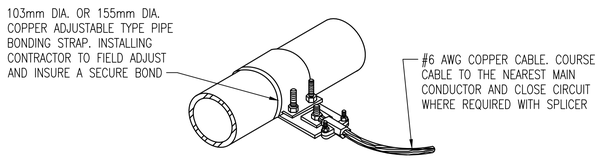

5 E00.17 TYPICAL PIPE GROUNDING DETAIL
NOT TO SCALE

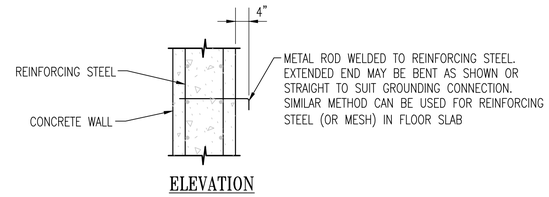

6 E00.17 DETAIL-METHOD FOR GROUNDING OF REINFORCING STEEL
NOT TO SCALE

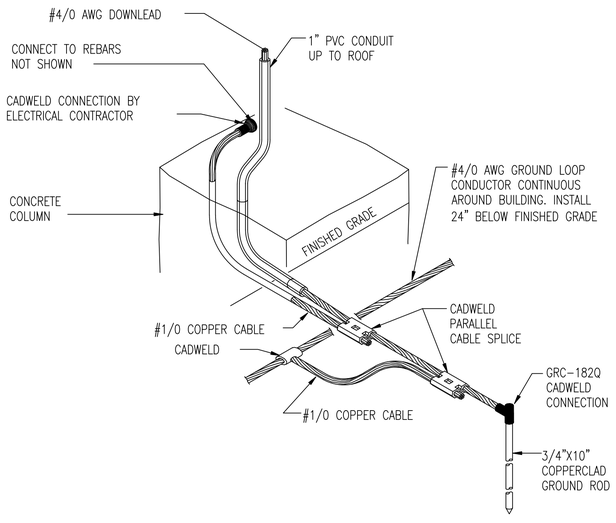

7 E00.17 DOWNLEAD TO GROUNDING CONNECTION DETAIL
NOT TO SCALE

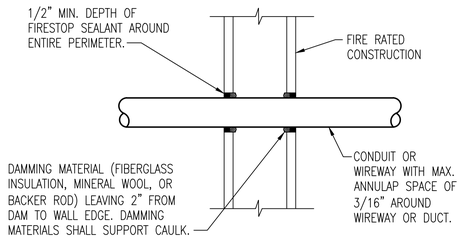

8 E00.17 DETAIL - FIRE STOP THROUGH WALL
NOT TO SCALE

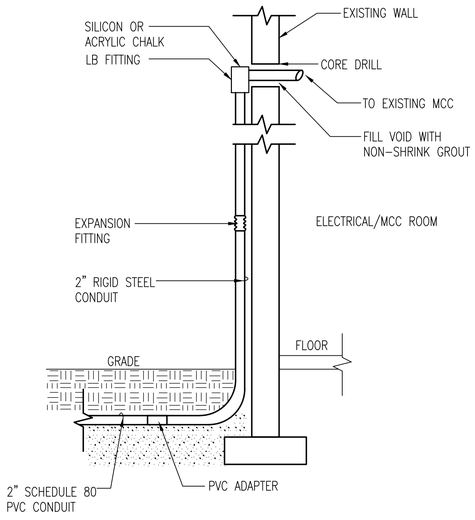

9 E00.17 TYPICAL BELOW GRADE TO ABOVE GRADE CONDUIT DETAIL
NOT TO SCALE

REVISIONS

CLIENT INFORMATION

SUSSEX COUNTY, DE
ENGINEERING DEPARTMENT

INLAND BAYS RWF
PHASE #2 EXPANSION:
CONTRACT S19-10

KEY PLAN

GRAPHIC SCALES

SIGNATURE

IL HWAN KIM LICENSE No. 19294 DELAWARE PROFESSIONAL ENGINEER
12-14-18

Whitman, Requardt & Associates, LLP
801 South Caroline Street, Baltimore, Maryland 21231

ELECTRICAL DETAILS

DRAWING NO.

E00.17

SCALE: NONE		
DATE: DEC. 2018	SHEET 149 OF 217	
DES: JPS	DRAWN: SMC	CHECK: IHK

PLOT DATE: 12/14/2018 3:59:32 PM PAGE SETUP: VRA-PDF (36X24) PLOT STYLE: VRA_2006.CTB PAPER SIZE:ARCH FULL BLEED D (36.00 X 24.00 INCHES)
N:\14256-028\CADD\14256028D0-17.dwg

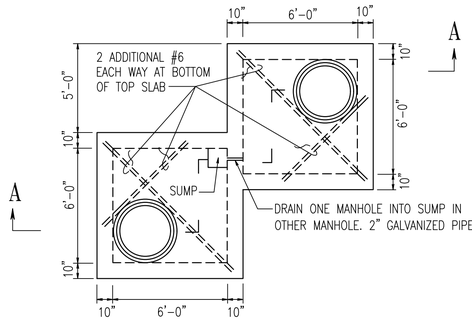

PLAN

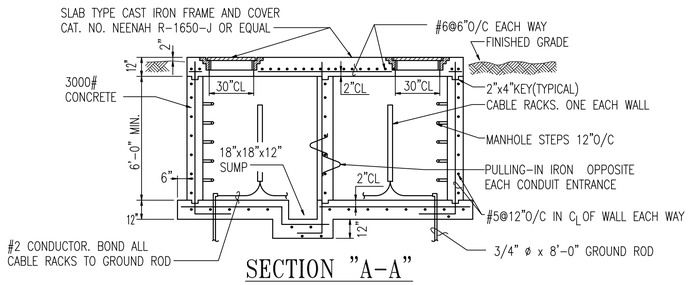

SECTION "A-A"

DETAIL - DOUBLE ELECTRICAL MANHOLE SUB-GRADE TYPE

1 / E00.18 NOT TO SCALE

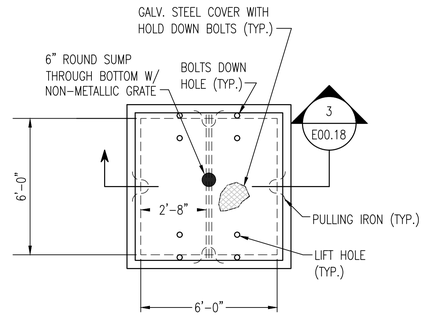

PLAN PRECAST HANDHOLE

2 / E00.18 NOT TO SCALE

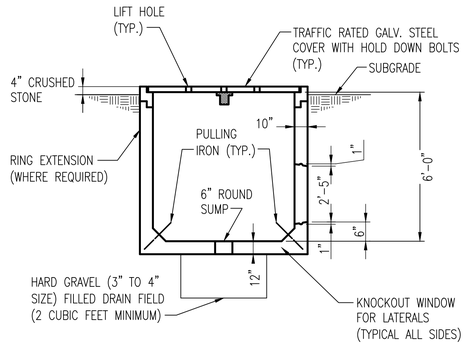

SECTION

3 / E00.18 NOT TO SCALE

GENERAL SHEET NOTES

1. SEE DRAWING E00.01 FOR ELECTRICAL LEGEND.
2. SEE DRAWING E00.02 FOR GENERAL NOTES AND ABBREVIATIONS.

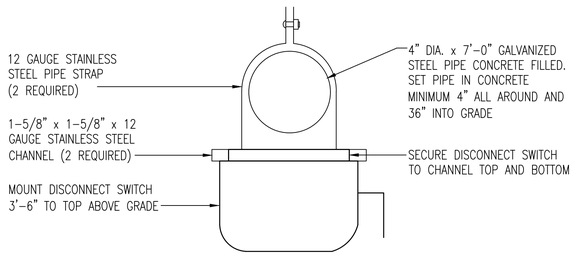

POST MOUNDTED DISCONNECT SWITCH DETAIL

4 / E00.18 NOT TO SCALE

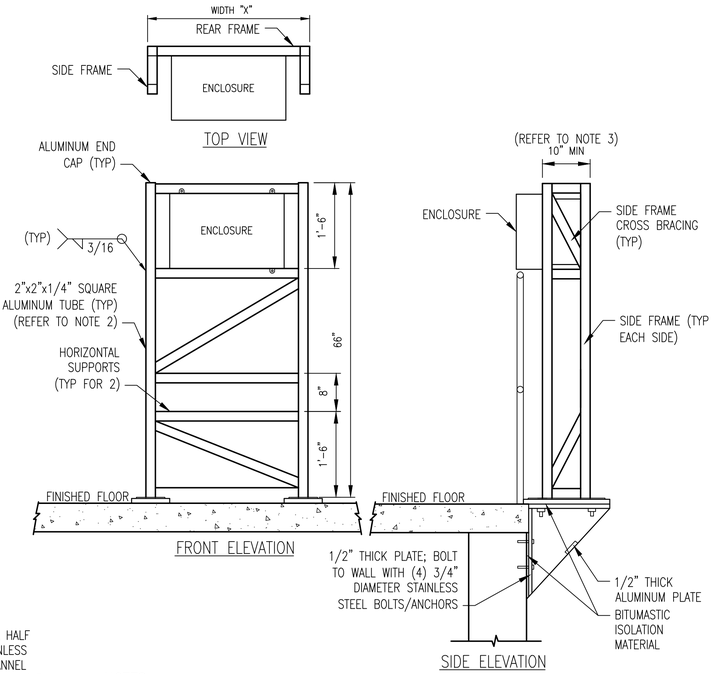

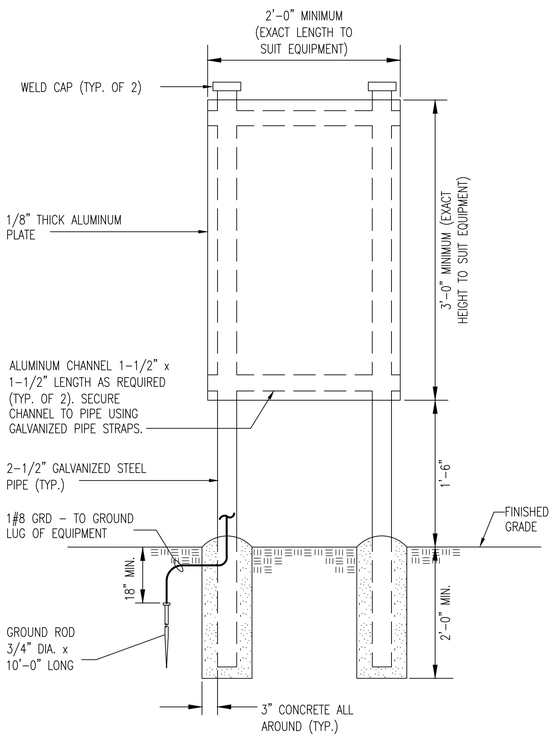

EQUIPMENT SUPPORT STRUCTURE DETAIL

5 / E00.18 NOT TO SCALE

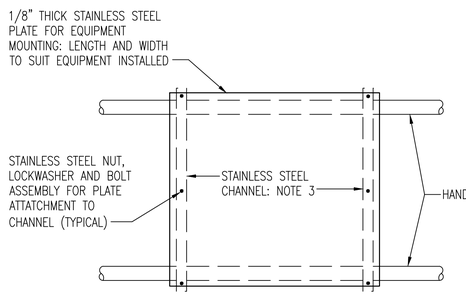

FRONT ELEVATION

NOTES:

1. ALL NUTS, BOLTS WASHERS, ETC USED IN ASSEMBLY AND EQUIPMENT MOUNTING TO BE STAINLESS STEEL.
2. SECURE CHANNEL TO HANDRAIL USING 12 GAUGE STAINLESS STEEL PIPE STRAPS, SIZE TO SUIT HANDRAIL.
3. LENGTH OF CHANNEL TO SUIT HANDRAIL SPACING.

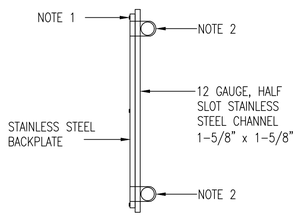

SIDE ELEVATION

BACKPLATE FOR EQUIPMENT MOUNTING TO HANDRAIL DETAIL

6 / E00.18 NOT TO SCALE

NOTES:

1. EQUIPMENT MOUNTING RACK SHALL BE UTILIZED FOR SINGLE OR MULTIPLE ENCLOSURES OR INSTRUMENT ENCLOSURES. EQUIPMENT MOUNTING RACK SHALL BE FREE STANDING, CONSTRUCTED OF 2" SQUARE ALUMINUM TUBING WELDED IN A FRAME TYPE CONSTRUCTION.
2. THE EQUIPMENT MOUNTING RACK WIDTH SHALL BE SIZED TO ACCOMMODATE THE ENCLOSURE(S).
3. THE SIDE FRAME ASSEMBLY SHALL BE 10" DEEP MINIMUM. THE SIDE FRAME SHALL BE APPROXIMATELY 2/3rds THE SIZE OF THE ENCLOSURE DEPTH.
4. CROSS BRACING SHALL BE PROVIDED ON THE REAR FRAME ASSEMBLY FOR EMRs 24" WIDE AND LARGER. CROSS BRACING SHALL BE PROVIDED ON THE SIDE FRAME FOR EMRs 18" DEEP OR LARGER.
5. ENCLOSURES SHALL BE MOUNTED USING STAINLESS STEEL HARDWARE.

HANDRAIL EQUIPMENT MOUNTING RACK DETAILS

7 / E00.09 NOT TO SCALE

REVISIONS		

CLIENT INFORMATION

SUSSEX COUNTY, DE
ENGINEERING
DEPARTMENT

INLAND BAYS RWF
PHASE #2 EXPANSION:
CONTRACT S19-10

KEY PLAN

GRAPHIC SCALES

SIGNATURE



Whitman, Requardt & Associates, LLP
801 South Caroline Street, Baltimore, Maryland 21231

ELECTRICAL DETAILS

DRAWING NO.

E00.18

SCALE: NONE		
DATE: DEC. 2018	SHEET 150 OF 217	
DES: JPS	DRAWN: KK	CHECK: IHK

PLOT DATED: 12/14/2018 2:59:36 PM PAGE SETUP: WRA-PDF (36X24) PLOT STYLE: WRA_2004CTB PAPER SIZE:ARCH FULL BLEED D (36.00 X 24.00 INCHES)
N:\14256-028\CADD\14256028E00-18.dwg

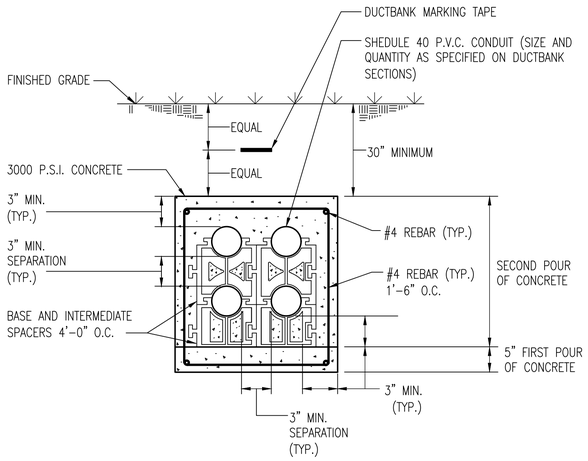

A E00.19 TYPICAL DUCTBANK DETAIL
NOT TO SCALE

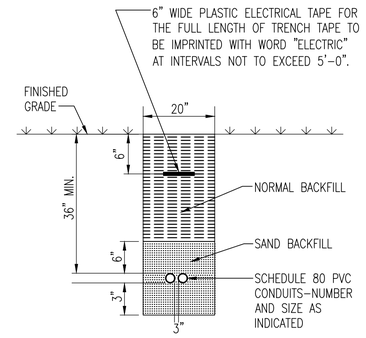

B E00.19 TYPICAL DIRECT BURIED CONDUIT DETAIL
NOT TO SCALE

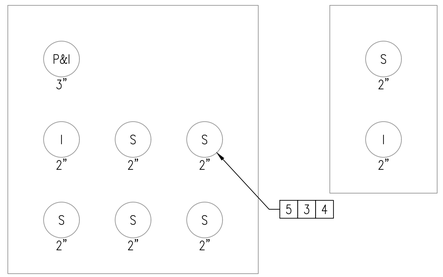

DB701 E00.19 EX. DUCTBANK "DB-AL2" SECTION
NOT TO SCALE

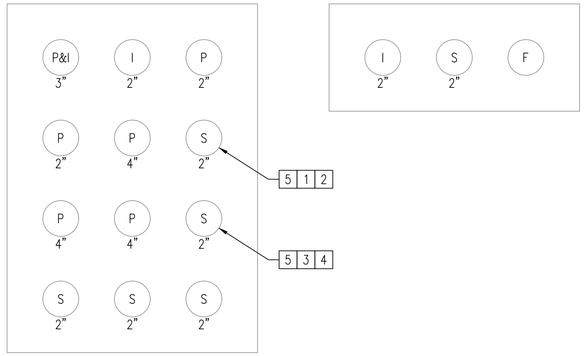

DB702 E00.19 EX. DUCTBANK "DB-MT15" SECTION
NOT TO SCALE

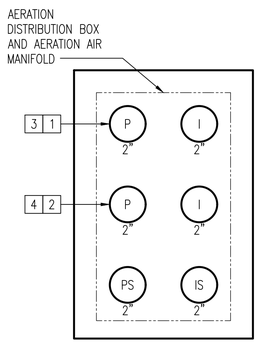

DB703 E00.19 DUCTBANK SECTION
NOT TO SCALE

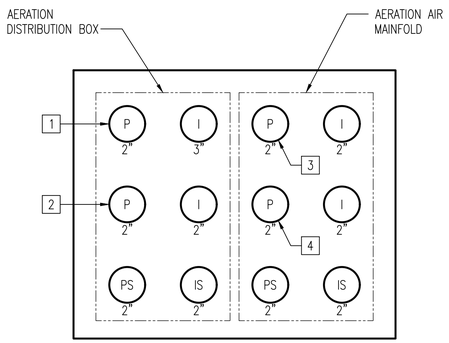

DB704 E00.19 DUCTBANK SECTION
NOT TO SCALE

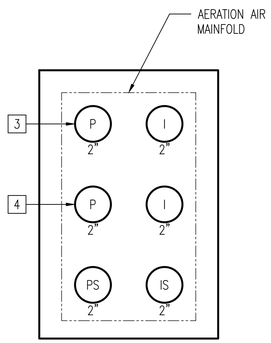

DB705 E00.19 DUCTBANK SECTION
NOT TO SCALE

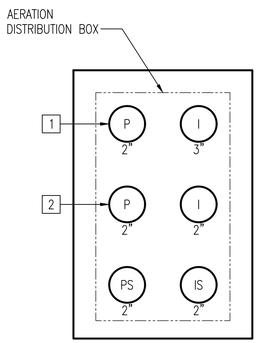

DB706 E00.19 DUCTBANK SECTION
NOT TO SCALE

DUCTBANK LEGEND

F	FIBER OPTIC
P	POWER
PS	POWER SPARE
P&I	POWER & INSTRUMENTATION/CONTROL
I	INSTRUMENTATION
IS	INSTRUMENTATION SPARE

GENERAL SHEET NOTES

1. SEE DRAWING E00.01 FOR ELECTRICAL LEGEND.
2. SEE DRAWING E00.02 FOR GENERAL NOTES AND ABBREVIATIONS.
3. SEE ONE LINE DIAGRAMS ON DRAWING E00.06 FOR ALL DB7XX SERIES DUCTBANKS FEEDER REQUIREMENTS.
4. EXISTING DUCT BANK INFORMATION IS BASED ON RECORD DRAWINGS AND EXISTING DUCT BANK CONDITIONS SHALL BE VERIFIED PRIOR TO NEW WORK.
5. REFER TO INSTRUMENTATION DRAWINGS FOR NEW WIRING REQUIREMENTS FOR NEW DUCTBANKS AND CONDUITS LABELED "P&I", "I" AND "F".5.
6. DUCTBANK SECTIONS ARE DIAGRAMMATIC, SEE TYPICAL DUCTBANK DETAIL A/E00.19 FOR DUCTBANK SECTIONS INSTALLATION REQUIREMENTS.
7. SEE ELECTRICAL PARTIAL SITE PLANS "A" AND "B" ON DRAWINGS E00.04 AND E00.05 FOR DUCTBANK LOCATIONS.
8. PROVIDE PULL STRING IN ALL NEW SPARE CONDUITS.

SHEET KEYNOTES

1. PROVIDE FEEDER "707."
2. PROVIDE FEEDER "710."
3. PROVE BRANCH CIRCUIT "PPPB2-13,15,17"
4. PROVE BRANCH CIRCUIT "PPPB2-14,16,18",
5. USE EXISTING SPARE DUCTBANK CONDUIT FOR NEW FEEDER(S) AND/OR BRANCH CIRCUIT(S).

REVISIONS		

CLIENT INFORMATION

SUSSEX COUNTY, DE
ENGINEERING
DEPARTMENT

INLAND BAYS RWF
PHASE #2 EXPANSION:
CONTRACT S19-10

KEY PLAN

GRAPHIC SCALES

SIGNATURE



Whitman, Requardt & Associates, LLP
801 South Caroline Street, Baltimore, Maryland 21231

ELECTRICAL DETAILS

DRAWING NO.

E00.19

SCALE: NONE		
DATE: DEC. 2018	SHEET 151 OF 217	
DES: JPS	DRAWN: SMC	CHECK: IHK

PLOT DATE: 12/14/2018 2:59:40 PM PAGE SETUP: WRA-PSF (36X24) PLOT STYLE: WRA_2006.CTB PAPER SIZE:ARCH FULL BLEED D (36.00 X 24.00 INCHES)
N:\14256-005\CADD\14256005B00-19.dwg

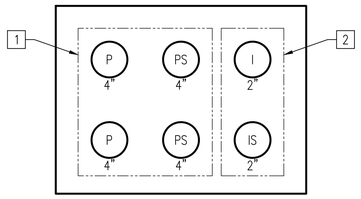

PBB2 SWB2 SERVICE FROM PBB1 DUCTBANK SECTION

DB801 / E00.20 NOT TO SCALE

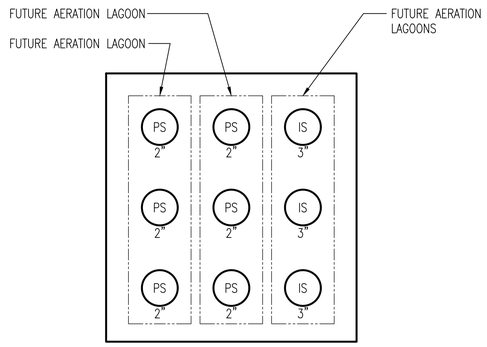

FUTURE AREATION LAGOONS DUCTBANK SECTION

DB802 / E00.20 NOT TO SCALE

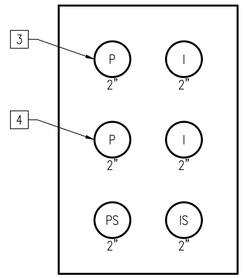

SECONDARY CLARIFIERS NOS. 3 & 4 – DUCTBANK SECTION

DB803 / E00.20 NOT TO SCALE

DUCTBANK LEGEND

P POWER
PS POWER SPARE
I INSTRUMENTATION
IS INSTRUMENTATION SPARE

GENERAL SHEET NOTES

1. SEE DRAWING E00.01 FOR ELECTRICAL LEGEND.
2. SEE DRAWING E00.02 FOR GENERAL NOTES AND ABBREVIATIONS.
3. SEE PUMP AND BLOWER BUILDING NO.2 ONE LINE DIAGRAM ON DRAWING E00.08 FOR FOR DUCTBANK SERIES DB8XX FEEDER AND BRANCH CIRCUIT REQUIREMENTS.
4. SEE FILTERED IRRIGATION PUMP STATION ONE LINE DIAGRAM ON DRAWING E00.10 FOR DUCTBANK SERIES DB9XX FOR FEEDER AND BRANCH CIRCUIT REQUIREMENTS.
5. DUCTBANK SECTIONS ARE DIAGRAMATIC, SEE TYPICAL DUCTBANK DETAIL A/E00.19 FOR DUCTBANK SECTIONS INSTALLATION REQUIREMENTS.
6. SEE ELECTRICAL PARTIAL SITE PLANS "A" AND "B" ON DRAWINGS E00.04 AND E00.05 FOR DUCTBANK LOCATIONS.
7. PROVIDE PULL STRING IN ALL NEW SPARE CONDUITS.

SHEET KEYNOTES

1. PROVIDE FEEDER "801."
2. CONDUITS FOR COMMUNICATIONS BETWEEN PUMP AND BLOWER BUILDINGS NO.1 AND NO.2. TERMINATE CONDUITS IN CONTROL PULLBOXES IN EACH BUILDING. SEE INSTRUMENTATION DRAWINGS FOR WIRING REQUIREMENTS.
3. PROVIDE FEEDER "814", "815", "816" AND "817."
4. PROVE BRANCH CIRCUIT "LPB2–32", "LPB2–34" AND "LPB2–36."
5. PROVIDE FEEDER "902."
6. PROVIDE FEEDER "903."
7. PROVIDE FEEDER "956."
8. PROVIDE FEEDER "917", "919" AND "921."
9. PROVE BRANCH CIRCUIT "LPFI–31", "LPFI–33" AND "LPFI–37."
10. PROVIDE FEEDER "925" AND "930."
11. PROVE BRANCH CIRCUIT "LPFI–32", "LPFI–34", "LPFI–36" AND "LPFI–38."
12. CONDUITS FOR COMMUNICATIONS BETWEEN PUMP AND BLOWER BUILDINGS NO.1 (PBB1) AND THE FILTERED IRRIGATION PUMP STATION (FIPS). TERMINATE CONDUITS IN CONTROL PULLBOXES IN EACH BUILDING. SEE INSTRUMENTATION DRAWINGS FOR WIRING REQUIREMENTS.
13. PROVIDE FEEDER "901."
14. PROVIDE FEEDER "904."

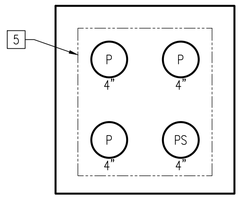

FIPS UTILITY XFMR SECONDARY DUCTBANK SECTION

DB901 / E00.20 NOT TO SCALE

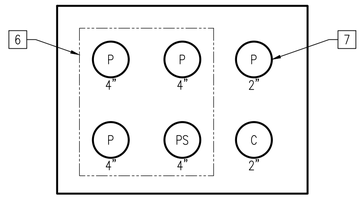

FIPS GENERATOR DUCTBANK SECTION

DB902 / E00.20 NOT TO SCALE

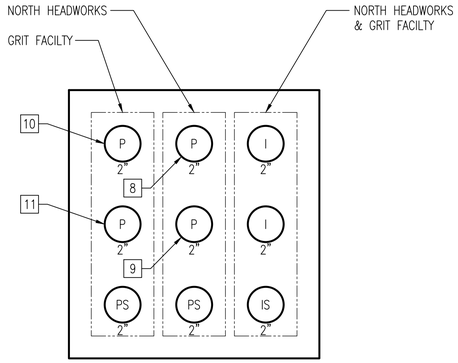

NHW & GRIT FACILITY DUCTBANK SECTION

DB903 / E00.20 NOT TO SCALE

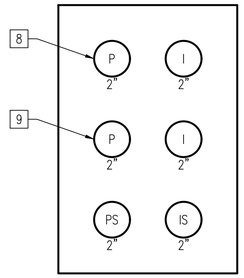

NHW DUCTBANK SECTION

DB904 / E00.20 NOT TO SCALE

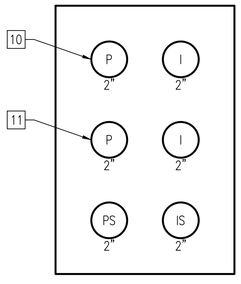

GRIT FACILITY DUCTBANK SECTION

DB905 / E00.20 NOT TO SCALE

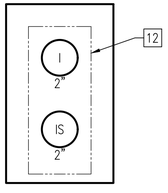

PBB1 AND FIPS COMMS DUCTBANK SECTION

DB906 / E00.20 NOT TO SCALE

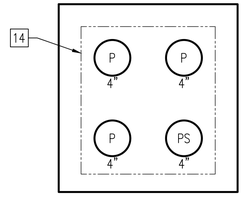

FIPS GEN LOADBANK BOX DUCTBANK SECTION

DB907 / E00.20 NOT TO SCALE

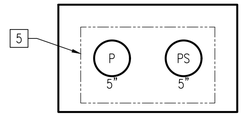

FIPS UTILITY XFMR PRIMARY DUCTBANK SECTION

DB908 / E00.20 NOT TO SCALE

REVISIONS		

CLIENT INFORMATION

SUSSEX COUNTY, DE ENGINEERING DEPARTMENT

INLAND BAYS RWF PHASE #2 EXPANSION: CONTRACT S19-10

KEY PLAN

GRAPHIC SCALES

SIGNATURE

IL HWAN KIM LICENSE No. 19294 DELAWARE PROFESSIONAL ENGINEER
12-14-18

Whitman, Requardt & Associates, LLP
801 South Caroline Street, Baltimore, Maryland 21231

ELECTRICAL DETAILS

DRAWING NO.

E00.20

SCALE: NONE		
DATE: DEC. 2018	SHEET 152 OF 217	
DES: JPS	DRAWN: SMC	CHECK: IHK

PLOT DATE: 12/14/2018 2:59:44 PM PAGE SETUP: WRA-PSP C36X24) PLOT STYLE: WRA_2006.CTB PAPER SIZE:ARCH FULL BLEED D (36.00 X 24.00 INCHES)
N:\14256-005\CADD\14256002E00-20.dwg



DB1001 / E00.21 EX. DUCTBANK "DBEB1" SECTION
NOT TO SCALE

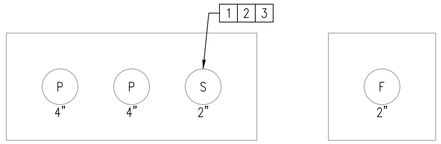

DB1002 / E00.21 EX. DUCTBANK "DBMT6" SECTION
NOT TO SCALE

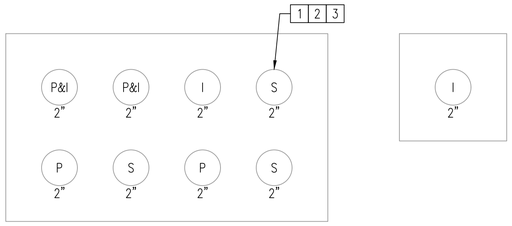

DB1003 / E00.21 EX. DUCTBANK "DBCCT1" SECTION
NOT TO SCALE

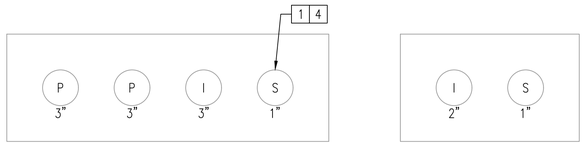

DB1101 / E00.21 EX. DUCTBANK "DBSH1" SECTION
NOT TO SCALE

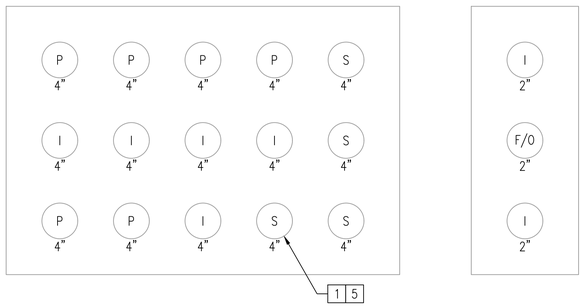

DB1201 / E00.21 EX. DUCTBANK "DBSDB1" SECTION
NOT TO SCALE

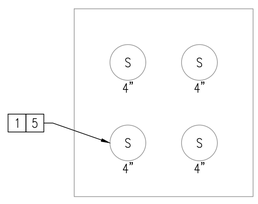

DB1202 / E00.21 EX. DUCTBANK "DBCSB1" SECTION
NOT TO SCALE

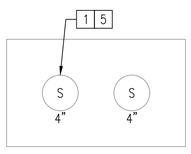

DB1203 / E00.21 EX. DUCTBANK "DBESB1" SECTION
NOT TO SCALE

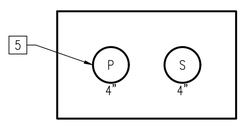

DB1204 / E00.21 FILTRATION FACILITY DUCTBANK SECTION
NOT TO SCALE

DUCTBANK LEGEND

F FIBER OPTIC
P POWER
PS POWER SPARE
P&I POWER & INSTRUMENTATION/CONTROL
I INSTRUMENTATION
IS INSTRUMENTATION SPARE

GENERAL SHEET NOTES

1. SEE DRAWING E00.01 FOR ELECTRICAL LEGEND.
2. SEE DRAWING E00.02 FOR GENERAL NOTES AND ABBREVIATIONS.
3. SEE ONE LINE DIAGRAM ON 1/E00.06 FOR ALL "DB10XX" AND "DB11XX" SERIES DUCTBANKS AND FEEDER REQUIREMENTS.
4. EXISTING DUCT BANK INFORMATION IS BASED ON RECORD DRAWINGS AND EXISTING DUCT BANK CONDITIONS SHALL BE VERIFIED PRIOR TO NEW WORK.
5. SEE INSTRUMENTATION DRAWINGS FOR NEW CONTROL AND INSTRUMENTATION WIRING REQUIREMENTS IN EXISTING DUCTBANKS.
6. SEE ELECTRICAL PARTIAL SITE PLAN "A" ON DRAWING E00.04 FOR DUCTBANK LOCATIONS.

SHEET KEYNOTES

1 USE EXISTING SPARE DUCTBANK CONDUIT FOR NEW FEEDER(S) AND/OR BRANCH CIRCUIT(S).

2 PROVIDE FEEDER "1002"

3 PROVIDE BRANCH CIRCUIT "LPSH1-22"

4 PROVIDE BRANCH CIRCUIT "LPSH1-4", "LPSH1-21"

5 PROVIDE FEEDER FOR FILTRATION FACILITY PANEL PPFF. SEE DRAWING E00.03A FOR FEEDER REQUIREMENTS.

REVISIONS

CLIENT INFORMATION

SUSSEX COUNTY, DE
ENGINEERING
DEPARTMENT

INLAND BAYS RWF
PHASE #2 EXPANSION:
CONTRACT S19-10

KEY PLAN

GRAPHIC SCALES

SIGNATURE

IL IMAN KIM
LICENSE
No. 15204
DELAWARE
PROFESSIONAL ENGINEER
7-10-19

Whitman, Requardt & Associates, LLP
801 South Caroline Street, Baltimore, Maryland 21231

ELECTRICAL DETAILS

DRAWING NO.

E00.21

SCALE: NONE		
DATE: JULY 2019	SHEET 153 OF 229	
DES: JPS	DRAWN: SMC	CHECK: IHK

PLOT DATE: 7/10/2019 8:53:35 PM PAGE SETUP: WRA-PDF (36X24) PLOT STYLE: WRA_2006.CTB PAPER SIZE:ARCH FULL BLEED D (36.00 X 24.00 INCHES)
N:\14256-028\CADD\14256028E00-21.dwg

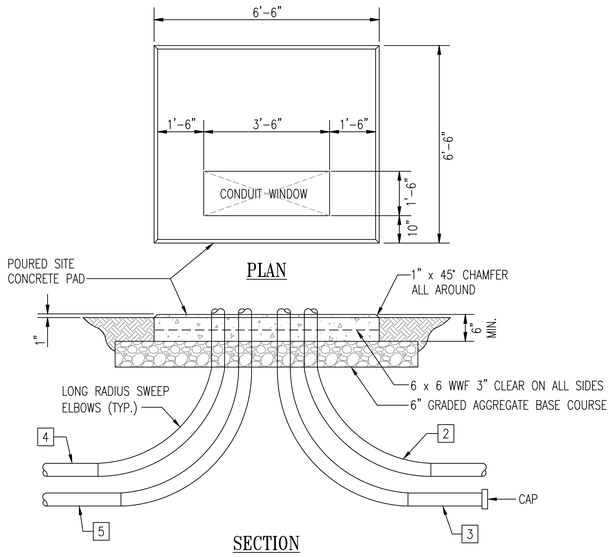

1 E00.22 DETAIL – TRANSFORMER PAD 6

NOT TO SCALE

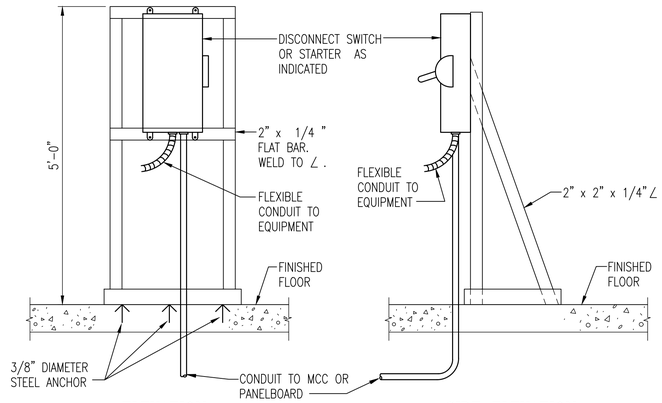

2 E00.22 MOUNTING DETAIL FOR SAFETY SWITCHES 1

NOT TO SCALE

GENERAL SHEET NOTES

1. SEE DRAWING E00.01 FOR ELECTRICAL LEGEND.
2. SEE DRAWING E00.02 FOR GENERAL NOTES AND ABBREVIATIONS.
3. SEE INSTRUMENTATION DRAWINGS FOR CONTROL PANEL ELEVATIONS AND DIAGRAMS.

SHEET KEY NOTES

1. ALL NUTS, BOLTS WASHERS, ETC USED IN ASSEMBLY AND EQUIPMENT MOUNTING TO BE STAINLESS STEEL.
2. 3–2" SCHEDULE 40 PVC DUCT SWEEP ELBOWS FOR PRIMARY SERVICE WIRES.
3. 3–2" SCHEDULE 40 PVC SPARE DUCT SWEEP ELBOWS.
4. 4–4" SCHEDULE 40 PVC DUCT SWEEP ELBOWS FOR SECONDARY SERVICE WIRES TO 6 WAY DUCTBANK.
5. 2–4" SCHEDULE 40 PVC SPARE DUCT SWEEP ELBOWS TO 6 WAY DUCTBANK.
6. CONTRACTOR SHALL PROVIDE ALL WORK REQUIRED BY THE DELAWARE ELECTRIC CO-OP (DEC) TO INSTALL SERVICE IN ACCORDANCE WITH DEC STANDARDS INCLUDING DUCTS, PAD, GROUNDING, METER SOCKET, ETC.

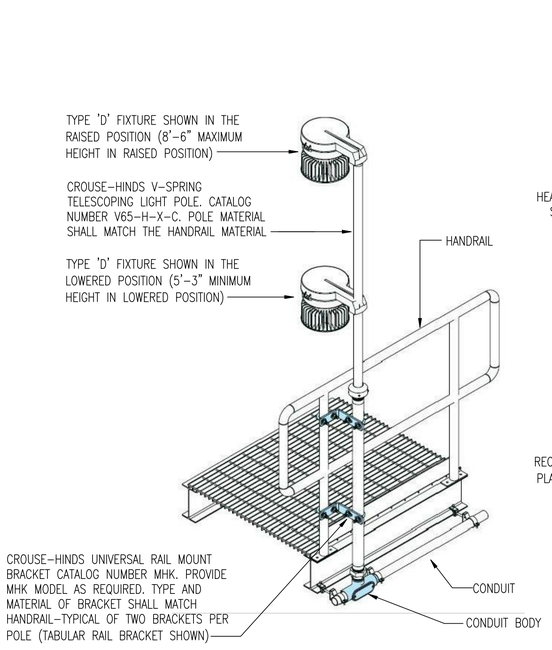

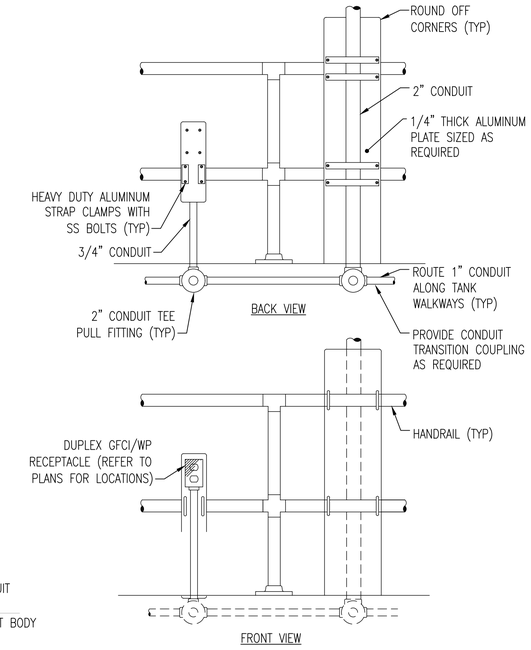

3 E00.22 FIXTURE MOUNTING ON HANDRAIL DETAIL

NOT TO SCALE

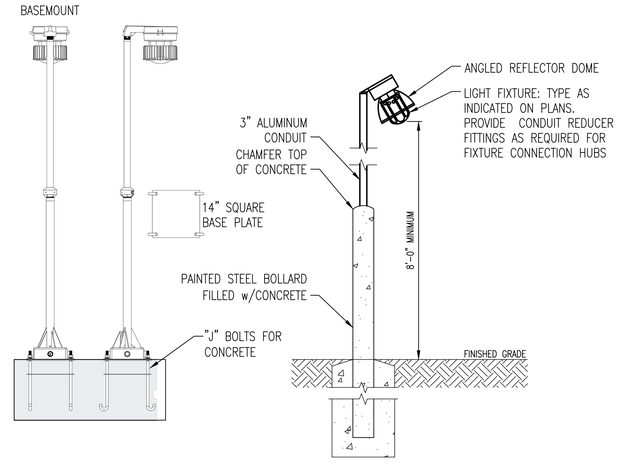

4 E00.22 FIXTURE MOUNTING ON BOLLARD AND CONCRETE

NOT TO SCALE

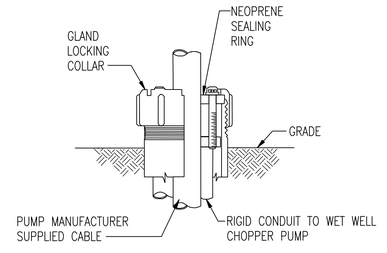

5 E00.22 CONDUIT SEALING BUSHING

NOT TO SCALE

REVISIONS

CLIENT INFORMATION

SUSSEX COUNTY, DE
ENGINEERING
DEPARTMENT

INLAND BAYS RWF
PHASE #2 EXPANSION:
CONTRACT S19-10

KEY PLAN

GRAPHIC SCALES

SIGNATURE

IL HWAN KIM LICENSE No. 19294 DELAWARE PROFESSIONAL ENGINEER
12-14-18

Whitman, Requardt & Associates, LLP
801 South Caroline Street, Baltimore, Maryland 21231

ELECTRICAL DETAILS

DRAWING NO.

E00.22

SCALE: NONE		
DATE: DEC. 2018	SHEET 154 OF 217	
DES: JPS	DRAWN: KK	CHECK: IHK

PLOT DATE: 12/14/2018 2:59:52 PM PAGE SETUP: WRA-PDF (36X24) PLOT STYLE: WRA_2006.CTB PAPER SIZE:ARCH FULL BLEED D (36.00 X 24.00 INCHES)

N:\14456-028\CADD\14456028E00-22.dwg

GENERAL SHEET NOTES

1. SEE DRAWING E00.01 FOR ELECTRICAL LEGEND.
2. SEE DRAWING E00.02 FOR GENERAL NOTES AND ABBREVIATIONS.
3. SEE INSTRUMENTATION DRAWINGS FOR CONTROL PANEL ELEVATIONS AND DIAGRAMS.

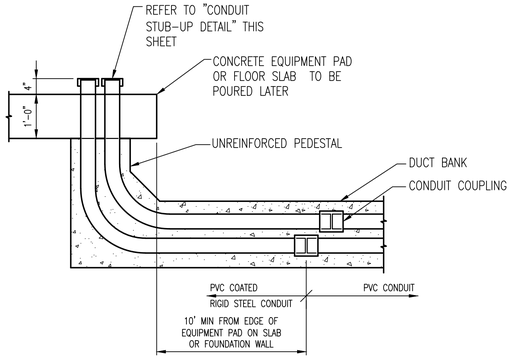

1 E00.23 — DUCT BANK STUB-UP DETAIL
NOT TO SCALE

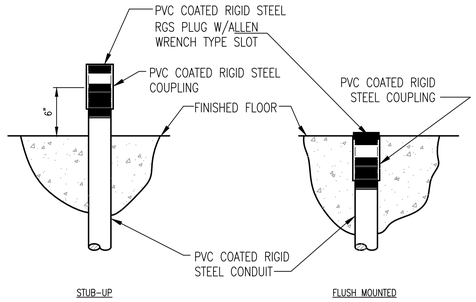

NOTES:
1. CONDUIT STUB-UPS IN HAZARDOUS LOCATIONS SHALL BE PROVIDED WITH CONDUIT SEALS IN ACCORDANCE WITH ARTICLE 501 OF THE NATIONAL ELECTRIC CODE.

2 E00.23 — CONDUIT STUB-UP DETAIL
NOT TO SCALE

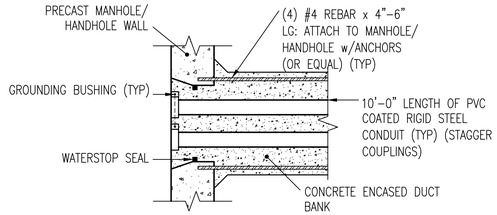

3 E00.23 — CONDUIT ENTRANCE AT MANHOLE / HANDHOLE
NOT TO SCALE

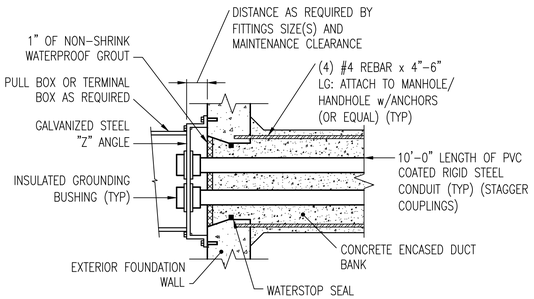

NOTES:
1. THIS DETAIL APPLIED TO DUCTS CONTAINING 4 OR MORE CONDUITS. USE CAST-IN-PLACE WALL SEALS FOR PENETRATIONS OF 3 CONDUITS OR LESS.

4 E00.23 — CONDUIT WALL ENTRANCE SEAL DETAIL
NOT TO SCALE

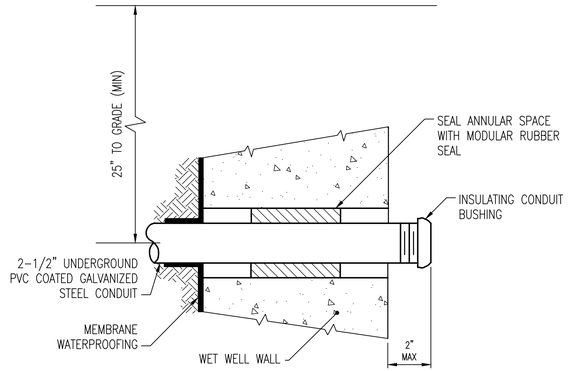

5 E00.23 — ELECTRICAL CONDUIT ENTRY INTO WET WELL / VAULT DETAIL
NOT TO SCALE

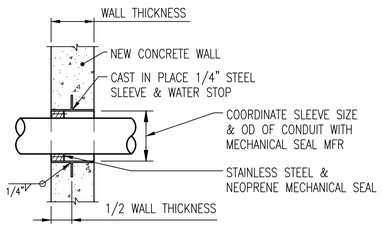

INSTALL SEALS ON BOTH SIDES OF WALL WHEN WALL THICKNESS EXCEEDS 15 INCHES. CAST STEEL FRAME WITH COMPRESSIBLE, ELASTOMERIC SECTIONS INTO WALL WHERE MORE THAN THREE CONDUITS PENETRATE WALL. CROUSE HINDS "THRU-WALL BARRIER" OR EQUAL.

6 E00.23 — CONDUIT PENETRATION THROUGH NEW CONCRETE WALL
NOT TO SCALE

REVISIONS

CLIENT INFORMATION

SUSSEX COUNTY, DE
ENGINEERING
DEPARTMENT

INLAND BAYS RWF
PHASE #2 EXPANSION:
CONTRACT S19-10

KEY PLAN

GRAPHIC SCALES

SIGNATURE

IL HWAN KIM
LICENSE
No. 19294
DELAWARE
PROFESSIONAL ENGINEER
12-14-18

Whitman, Requardt & Associates, LLP
801 South Caroline Street, Baltimore, Maryland 21231

ELECTRICAL DETAILS

DRAWING NO.

E00.23

SCALE: NONE		
DATE: DEC. 2018	SHEET 155 OF 217	
DES: JPS	DRAWN: KK	CHECK: IHK

PLOT DATE: 12/14/2018 3:59:56 PM PAGE SETUP: WRA-PDF (36X24) PLOT STYLE: WRA_2006.CTB PAPER SIZE:ARCH FULL BLEED D (36.00 X 24.00 INCHES)
N:\14456-028\CADD\14456028E00-23.dwg

GENERAL SHEET NOTES

1. SEE DRAWING E00.01 FOR ELECTRICAL LEGEND.
2. SEE DRAWING E00.02 FOR GENERAL NOTES AND ABBREVIATIONS.
3. SEE INSTRUMENTATION DRAWINGS FOR CONTROL PANEL ELEVATIONS AND DIAGRAMS.

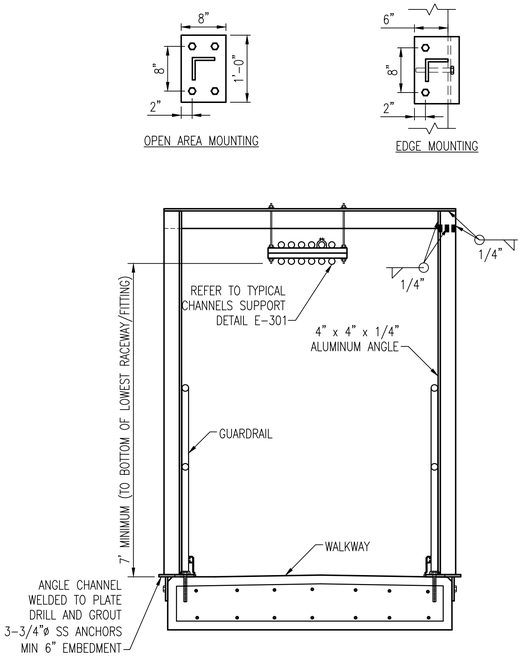

1 E00.24 OVERHEAD CONDUIT SUPPORT
NOT TO SCALE

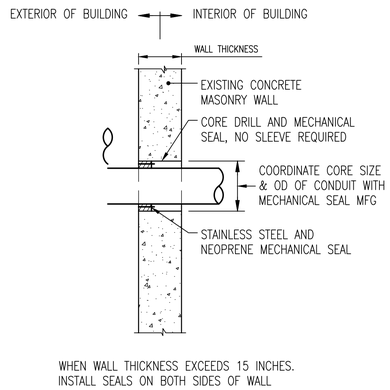

WHEN WALL THICKNESS EXCEEDS 15 INCHES.
INSTALL SEALS ON BOTH SIDES OF WALL

2 E00.24 CONDUIT PENETRATION THROUGH EXISTING CONCRETE WALL
NOT TO SCALE

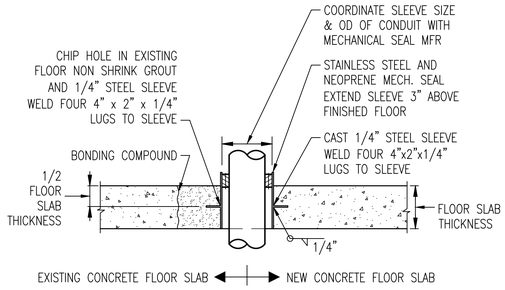

INSTALL SEALS ON BOTH SIDES OF FLOOR WHEN FLOOR THICKNESS EXCEEDS 15".
GROUT/CAST STEEL FRAME WITH COMPRESSIBLE, ELASTOTHERMIC SECTIONS INTO FLOOR WHERE MORE THAN THREE CONDUITS PENETRATE THE FLOOR. CROUSE-HINDS "THRU-WALL BARRIER" OR EQUAL.

3 E00.24 CONDUIT PENETRATION THROUGH CONCRETE FLOOR SLAB
NOT TO SCALE

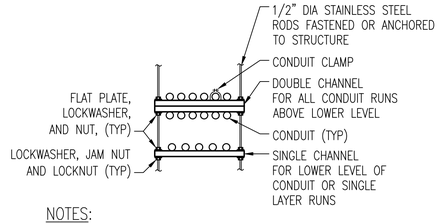

NOTES:
1. CHANNEL MEMBERS SHALL BE 1-5/8" X 1-5/8" X 12 GAUGE MIN.
2. CHANNEL SUPPORT SYSTEMS SHALL BE STAINLESS TEEL AND SHALL CONFORM TO APPLICATION FOR CONDUIT.
3. THE LOWEST POINT OF HORIZONTAL RUN SUPPORT SYSTEM SHALL BE 7'-6" ABOVE FLOOR.

4 E00.24 TYPICAL CHANNEL SUPPORTS
NOT TO SCALE

NOTES:
1. PROVIDE TWO SUPPORTS FOR ENCLOSURES/EQUIPMENT WIDER THAN 8".
2. ALUMINUM MOUNTING PLATES SHALL BE 2" GREATER ON EACH SIDE THAN DIMENSION OF THE ENCLOSURE(S)/EQUIPMENT. ROUND ALL CORNERS AND EDGES.
3. ANCHOR ALUMINUM PLATE TO ANGLE POST WITH 3/8"ø STAINLESS STEEL FASTENERS.

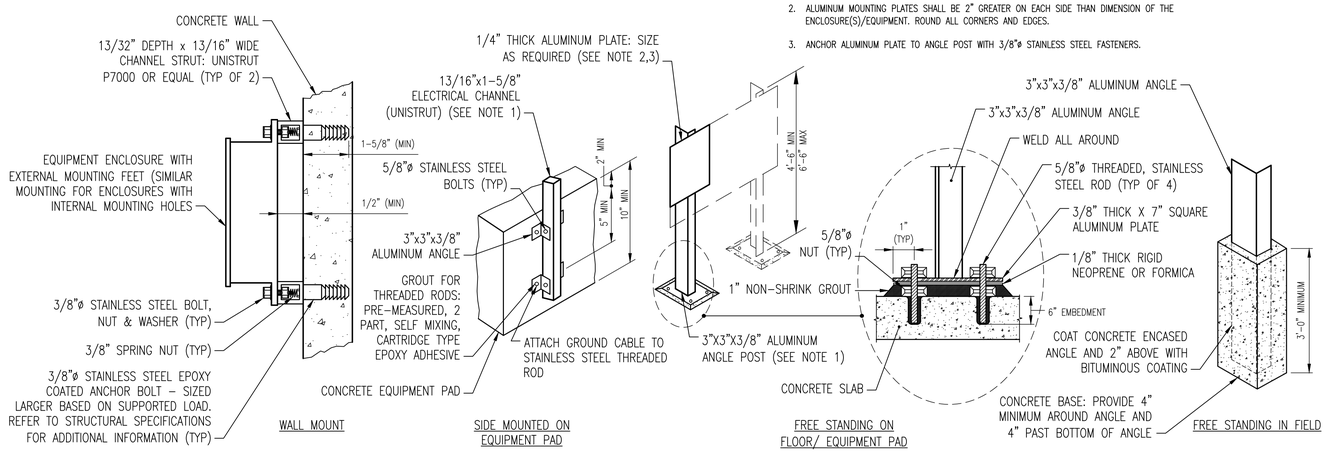

5 E00.24 FREESTANDING/WALL EQUIPMENT MOUNTING RACK DETAILS
NOT TO SCALE

PLOT DATE: 12/14/2018 3:00:00 PM PAGE SETUP: WRA-PDF C36X24D PLOT STYLE: WRA_2006.CTB PAPER SIZE:ARCH FULL BLEED D (36.00 X 24.00 INCHES)
N:\14256-026\CADD\14256026D00-24.dwg

REVISIONS

CLIENT INFORMATION

SUSSEX COUNTY, DE
ENGINEERING
DEPARTMENT

INLAND BAYS RWF
PHASE #2 EXPANSION:
CONTRACT S19-10

KEY PLAN

GRAPHIC SCALES

SIGNATURE

IL HWAN KIM
LICENSE
No. 19294
DELAWARE
PROFESSIONAL ENGINEER
12-14-18

Whitman, Requardt & Associates, LLP
801 South Caroline Street, Baltimore, Maryland 21231

ELECTRICAL DETAILS

DRAWING NO.

E00.24

SCALE: NONE		
DATE: DEC. 2018	SHEET 156 OF 217	
DES: JPS	DRAWN: KK	CHECK: IHK

GENERAL SHEET NOTES

1. SEE DRAWING E00.01 FOR ELECTRICAL LEGEND.
2. SEE DRAWING E00.02 FOR GENERAL NOTES AND ABBREVIATIONS.
3. SEE INSTRUMENTATION DRAWINGS FOR CONTROL PANEL ELEVATIONS AND DIAGRAMS.

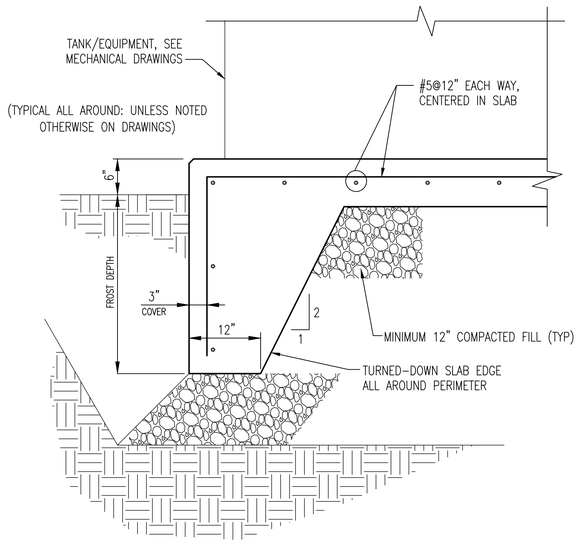

1 / E00.25 — FROST PROTECTED EQUIPMENT PAD
NOT TO SCALE

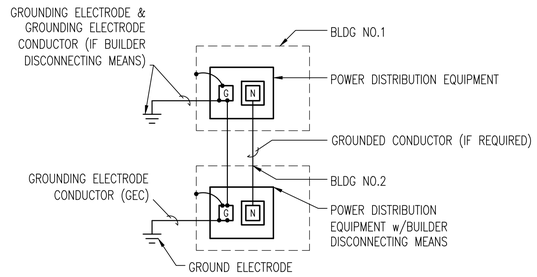

2 / E00.25 — SUB-FED BUILDING GROUNDING SCHEMATIC
NOT TO SCALE

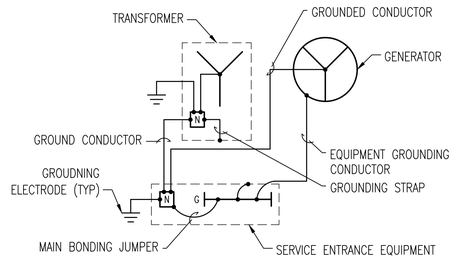

3 / E00.25 — SERVICE ENTRANCE GROUNDING SCHEMATIC
NOT TO SCALE

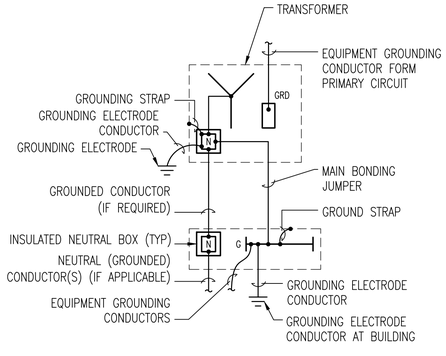

4 / E00.25 — SEPARATELY DERIVED SYSTEM GROUNDING SCHEMATIC
NOT TO SCALE

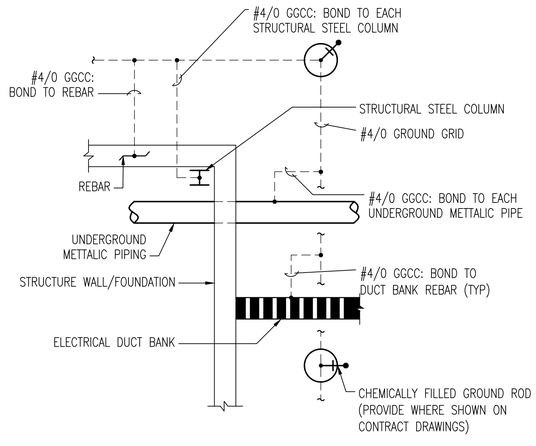

5 / E00.25 — GENERAL BUILDING GROUNDING SCHEMATIC
NOT TO SCALE

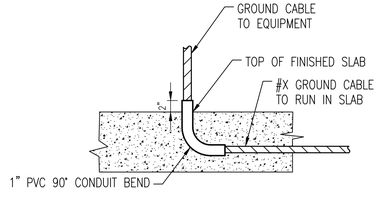

6 / E00.25 — TYPICAL GROUND CABLE SLAB PENETRATION
NOT TO SCALE

REVISIONS		

CLIENT INFORMATION

SUSSEX COUNTY, DE
ENGINEERING
DEPARTMENT

INLAND BAYS RWF
PHASE #2 EXPANSION:
CONTRACT S19-10

KEY PLAN

GRAPHIC SCALES

SIGNATURE

IL HWAN KIM
LICENSE
No. 19294
DELAWARE
PROFESSIONAL ENGINEER
12-14-18

Whitman, Requardt & Associates, LLP
801 South Caroline Street, Baltimore, Maryland 21231

ELECTRICAL DETAILS

DRAWING NO.

E00.25

SCALE: NONE		
DATE: DEC. 2018	SHEET 157 OF 217	
DES: JPS	DRAWN: KK	CHECK: IHK

PLOT DATE: 12/14/2018 3:00:03 PM PAGE SETUP: WRA-PDF C36X24D PLOT STYLE: WRA_2006.CTB PAPER SIZE:ARCH FULL BLEED D (36.00 X 24.00 INCHES)
N:\14256-026\CADD\14256026D00-25.dwg

GENERAL SHEET NOTES

1. SEE DRAWING E00.01 FOR ELECTRICAL LEGEND.
2. SEE DRAWING E00.02 FOR GENERAL NOTES AND ABBREVIATIONS.
3. SEE INSTRUMENTATION DRAWINGS FOR CONTROL PANEL ELEVATIONS AND DIAGRAMS.

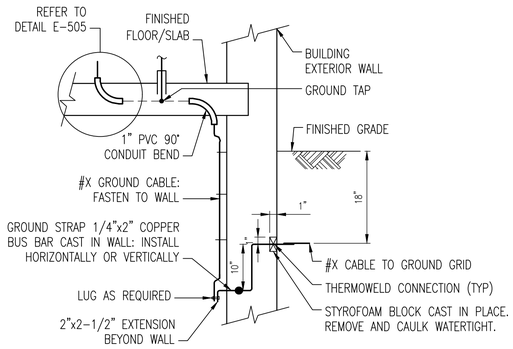

1 E00.26 TYPICAL BUILDING GROUND SYSTEM
NOT TO SCALE

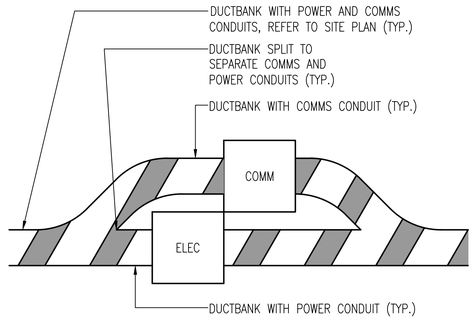

2 E00.26 TYPICAL POWER AND INSTRUMENTATION MANHOLE STRAIGHT ROUTING DETAIL
NOT TO SCALE

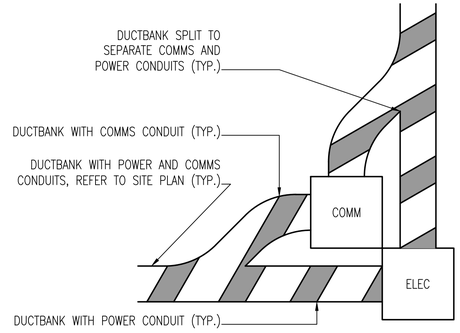

3 E00.26 TYPICAL POWER AND INSTRUMENTATION MANHOLE LEFT TURN ROUTING DETAIL
NOT TO SCALE

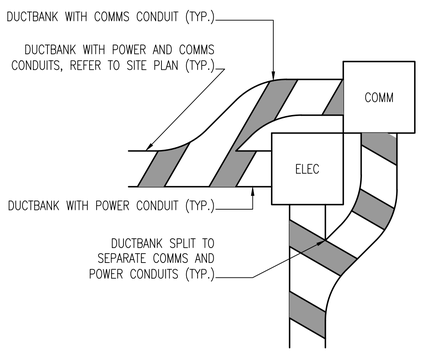

4 E00.26 TYPICAL POWER AND INSTRUMENTATION MANHOLE RIGHT TURN ROUTING DETAIL
NOT TO SCALE

REVISIONS

CLIENT INFORMATION

SUSSEX COUNTY, DE ENGINEERING DEPARTMENT

INLAND BAYS RWF PHASE #2 EXPANSION: CONTRACT S19-10

KEY PLAN

GRAPHIC SCALES

SIGNATURE



Whitman, Requardt & Associates, LLP
801 South Caroline Street, Baltimore, Maryland 21231

ELECTRICAL DETAILS

DRAWING NO.

E00.26

SCALE: NONE		
DATE: DEC. 2018	SHEET 158 OF 217	
DES: JPS	DRAWN: KK	CHECK: IHK

PLOT DATE: 12/14/2018 3:03:25 PM PAGE SETUP: WRA-PDF (36X24) PLOT STYLE: WRA_2006.CTB PAPER SIZE:ARCH FULL BLEED D (36.00 X 24.00 INCHES)
C:\Users\smccullough\appdata\local\temp\AcPublish_21712\14256028B00-26.dwg

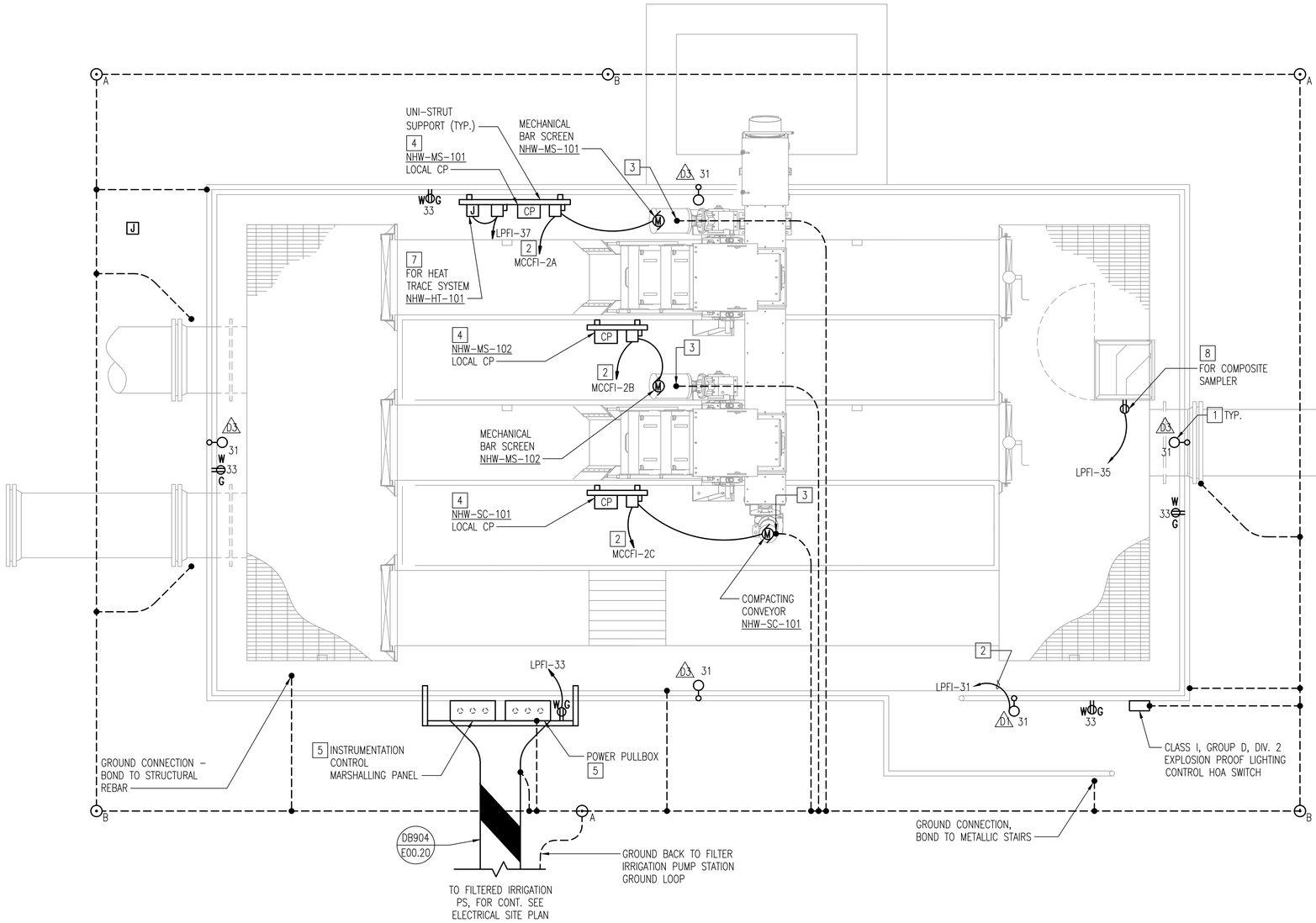

1 / E01.01 NORTH HEADWORKS - POWER AND LIGHTING PLAN
SCALE: 1/2" = 1'-0"

GENERAL SHEET NOTES

1. SEE DRAWING E00.01 FOR ELECTRICAL LEGEND.
2. SEE DRAWING E00.02 FOR ELECTRICAL GENERAL NOTES AND ABBREVIATIONS.
3. NORTH HEADWORKS FACILITY EQUIPMENT POWER IS PROVIDED FROM FILTERED IRRIGATION PUMP STATION, SEE DRAWING E00.08 FOR FILTERED IRRIGATION PUMP STATION ONE LINE DIAGRAM.
4. SEE DRAWING E00.12 FOR LIGHTING FIXTURE SCHEDULE.
5. SEE DRAWING E00.03 FOR ELECTRICAL SITE PLAN.
6. SEE INSTRUMENTATION DRAWINGS FOR INSTRUMENTATION EQUIPMENT AND CONTROL REQUIREMENTS.
7. THE NORTH HEADWORKS AREA AND CHANNELS SHALL BE DESIGNATED CLASS I, DIV. 2, GROUP D, HAZARDOUS LOCATION. ALL ELECTRICAL WORK IN THE AREA SHALL CONFORM TO NFPA 820.
8. ALL DISCONNECT SWITCHES SHALL BE NEMA 4X AND MOUNTED ABOVE HAZARDOUS ZONE.
9. ALL JUNCTION BOXES SHALL BE NEMA 4X.
10. PANEL LPFI BRANCH CIRCUITS ARE ROUTED TO FILTERED IRRIGATION PUMP STATION VIA POWER PULLBOX AND DUCTBANK. SEE DRAWING E09.01 FOR PANEL LPFI IN FILTERED IRRIGATION PUMP STATION. SEE DRAWING E00.14 FOR PANEL LPFI SCHEDULE.
11. HANDRAIL MOUNTED RECEPTACLES SHALL BE MOUNTED ABOVE HAZARDOUS ZONE.

SHEET KEYNOTES

1. SEE DETAIL 3/E00.22 FOR STANCHION MOUNTED FIXTURE DETAIL.
2. FEEDERS ROUTED TO FILTERED IRRIGATION PUMP STATION VIA POWER PULLBOX AND DUCTBANK. SEE FILTERED IRRIGATION PUMP STATION ONE LINE DIAGRAM ON DRAWING E00.10 FOR EQUIPMENT RATINGS AND FEEDER REQUIREMENTS. SEE DRAWING E09.01 FOR CONTINUATION OF FEEDERS IN FILTER IRRIGATION PUMP STATION.
3. GROUND CONNECTION - BOND TO EQUIPMENT FRAME.
4. EQUIPMENT LOCAL CONTROL SHOWN ON THIS DRAWING FOR REFERENCE AND COORDINATION OF EQUIPMENT ON SUPPORT RACK, REFER TO INSTRUMENTATION DRAWINGS FOR CONTROL AND ADDITIONAL REQUIREMENTS.
5. PROVIDE STAINLESS STEEL BOX MOUNTED AT 4'-0" ABOVE GRATING TO BOTTOM OF BOX ON UNI-STRUT SUPPORT. BOX TO BE SIZED PER NEC.
6. REFER TO ELECTRICAL SITE PLAN FOR CONTINUATION AND REQUIREMENTS.
7. REFER TO MECHANICAL DRAWINGS FOR HEAT TRACE SYSTEM REQUIREMENTS.
8. PROVIDE CLASS I, GROUP D, DIV. 2 EXPLOSION PROOF RECEPTACLE ENCLOSURE

REVISIONS

CLIENT INFORMATION

SUSSEX COUNTY, DE
ENGINEERING
DEPARTMENT

INLAND BAYS RWF PHASE #2 EXPANSION: CONTRACT S19-10

KEY PLAN

GRAPHIC SCALES

0 1' 2' 4'
SCALE: 1/2" = 1'-0"

SIGNATURE

IL HWAN KIM
LICENSE
No. 19294
DELAWARE
PROFESSIONAL ENGINEER
12-14-18

Whitman, Requardt & Associates, LLP
801 South Caroline Street, Baltimore, Maryland 21231

NORTH HEADWORKS
POWER AND LIGHTING PLAN

DRAWING NO.

E01.01

SCALE: AS SHOWN		
DATE: DEC. 2018	SHEET 159 OF 217	
DES: JPS	DRAWN: KK	CHECK: IHK

PLOT DATE: 12/14/2018 3:00:11 PM PAGE SETUP: WRA-PDF (36x24) PLOT STYLE: WRA_2006CTB PAPER SIZE:ARCH FULL BLEED D (36.00 X 24.00 INCHES)

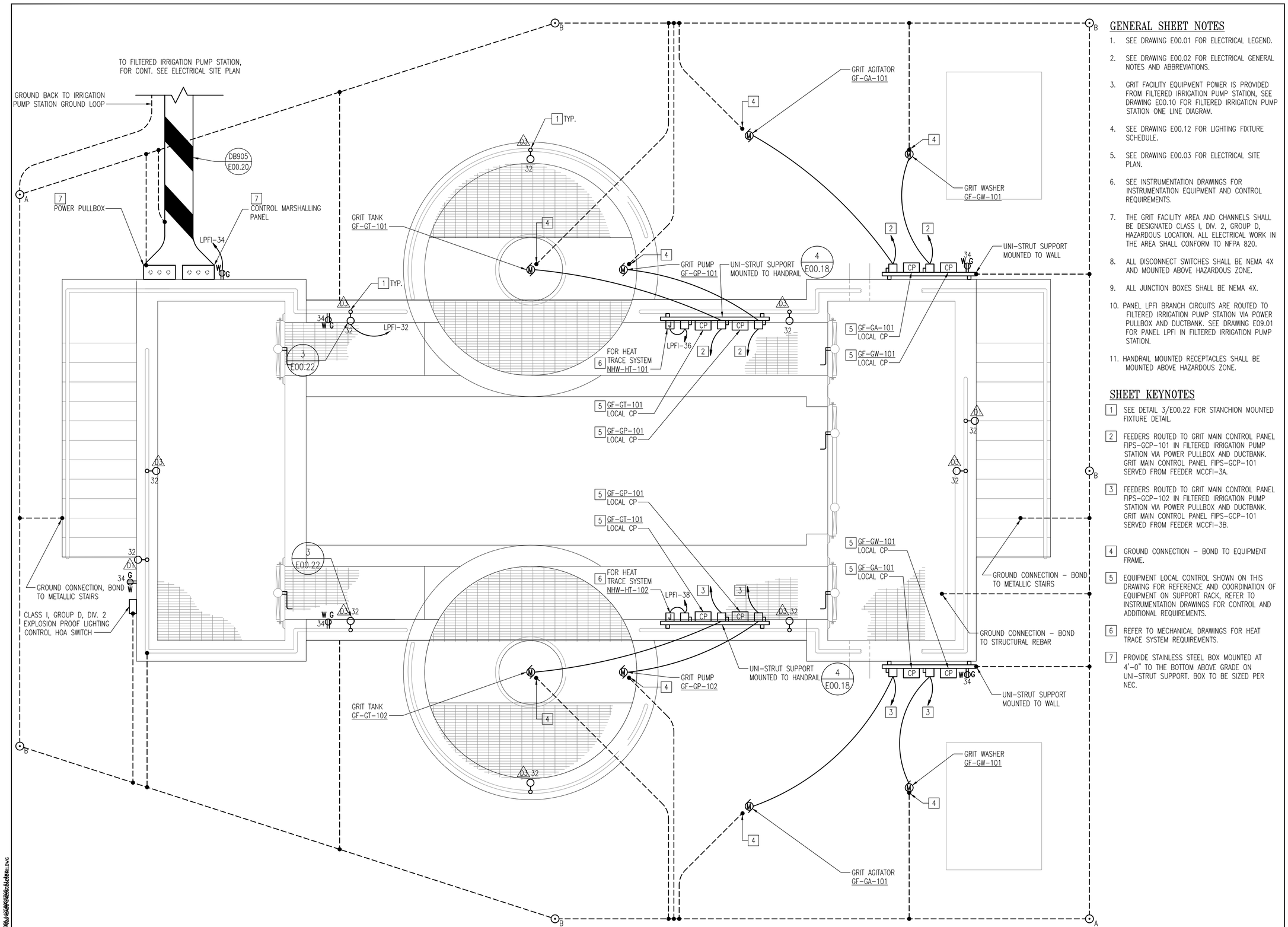

1 E02.01 GRIT FACILITY POWER AND LIGHTING PLAN
SCALE: 1/2" = 1'-0"

GENERAL SHEET NOTES

1. SEE DRAWING E00.01 FOR ELECTRICAL LEGEND.
2. SEE DRAWING E00.02 FOR ELECTRICAL GENERAL NOTES AND ABBREVIATIONS.
3. GRIT FACILITY EQUIPMENT POWER IS PROVIDED FROM FILTERED IRRIGATION PUMP STATION, SEE DRAWING E00.10 FOR FILTERED IRRIGATION PUMP STATION ONE LINE DIAGRAM.
4. SEE DRAWING E00.12 FOR LIGHTING FIXTURE SCHEDULE.
5. SEE DRAWING E00.03 FOR ELECTRICAL SITE PLAN.
6. SEE INSTRUMENTATION DRAWINGS FOR INSTRUMENTATION EQUIPMENT AND CONTROL REQUIREMENTS.
7. THE GRIT FACILITY AREA AND CHANNELS SHALL BE DESIGNATED CLASS I, DIV. 2, GROUP D, HAZARDOUS LOCATION. ALL ELECTRICAL WORK IN THE AREA SHALL CONFORM TO NFPA 820.
8. ALL DISCONNECT SWITCHES SHALL BE NEMA 4X AND MOUNTED ABOVE HAZARDOUS ZONE.
9. ALL JUNCTION BOXES SHALL BE NEMA 4X.
10. PANEL LPFI BRANCH CIRCUITS ARE ROUTED TO FILTERED IRRIGATION PUMP STATION VIA POWER PULLBOX AND DUCTBANK. SEE DRAWING E09.01 FOR PANEL LPFI IN FILTERED IRRIGATION PUMP STATION.
11. HANDRAIL MOUNTED RECEPTACLES SHALL BE MOUNTED ABOVE HAZARDOUS ZONE.

SHEET KEYNOTES

1. SEE DETAIL 3/E00.22 FOR STANCHION MOUNTED FIXTURE DETAIL.
2. FEEDERS ROUTED TO GRIT MAIN CONTROL PANEL FIPS-GCP-101 IN FILTERED IRRIGATION PUMP STATION VIA POWER PULLBOX AND DUCTBANK. GRIT MAIN CONTROL PANEL FIPS-GCP-101 SERVED FROM FEEDER MCCFI-3A.
3. FEEDERS ROUTED TO GRIT MAIN CONTROL PANEL FIPS-GCP-102 IN FILTERED IRRIGATION PUMP STATION VIA POWER PULLBOX AND DUCTBANK. GRIT MAIN CONTROL PANEL FIPS-GCP-101 SERVED FROM FEEDER MCCFI-3B.
4. GROUND CONNECTION - BOND TO EQUIPMENT FRAME.
5. EQUIPMENT LOCAL CONTROL SHOWN ON THIS DRAWING FOR REFERENCE AND COORDINATION OF EQUIPMENT ON SUPPORT RACK, REFER TO INSTRUMENTATION DRAWINGS FOR CONTROL AND ADDITIONAL REQUIREMENTS.
6. REFER TO MECHANICAL DRAWINGS FOR HEAT TRACE SYSTEM REQUIREMENTS.
7. PROVIDE STAINLESS STEEL BOX MOUNTED AT 4'-0" TO THE BOTTOM ABOVE GRADE ON UNI-STRUT SUPPORT. BOX TO BE SIZED PER NEC.

REVISIONS

CLIENT INFORMATION

SUSSEX COUNTY, DE
ENGINEERING
DEPARTMENT

INLAND BAYS RWF
PHASE #2 EXPANSION:
CONTRACT S19-10

KEY PLAN

GRAPHIC SCALES

0 1' 2' 4'
SCALE: 1/2" = 1'-0"

SIGNATURE

IL HWAN KIM LICENSE No. 19294 DELAWARE PROFESSIONAL ENGINEER
12-14-18

Whitman, Requardt & Associates, LLP
801 South Caroline Street, Baltimore, Maryland 21231

GRIT FACILITY
POWER AND LIGHTING PLAN

DRAWING NO.

E02.01

SCALE: AS SHOWN		
DATE: DEC. 2018	SHEET 160 OF 217	
DES: JPS	DRAWN: KK	CHECK: IHK

PLOT DATE: 12/14/2018 3:00:15 PM PAGE SETUP: WRA-PDF (36X24) PLOT STYLE: WRA_2006.CTB PAPER SIZE:ARCH FULL BLEED D (36.00 X 24.00 INCHES)

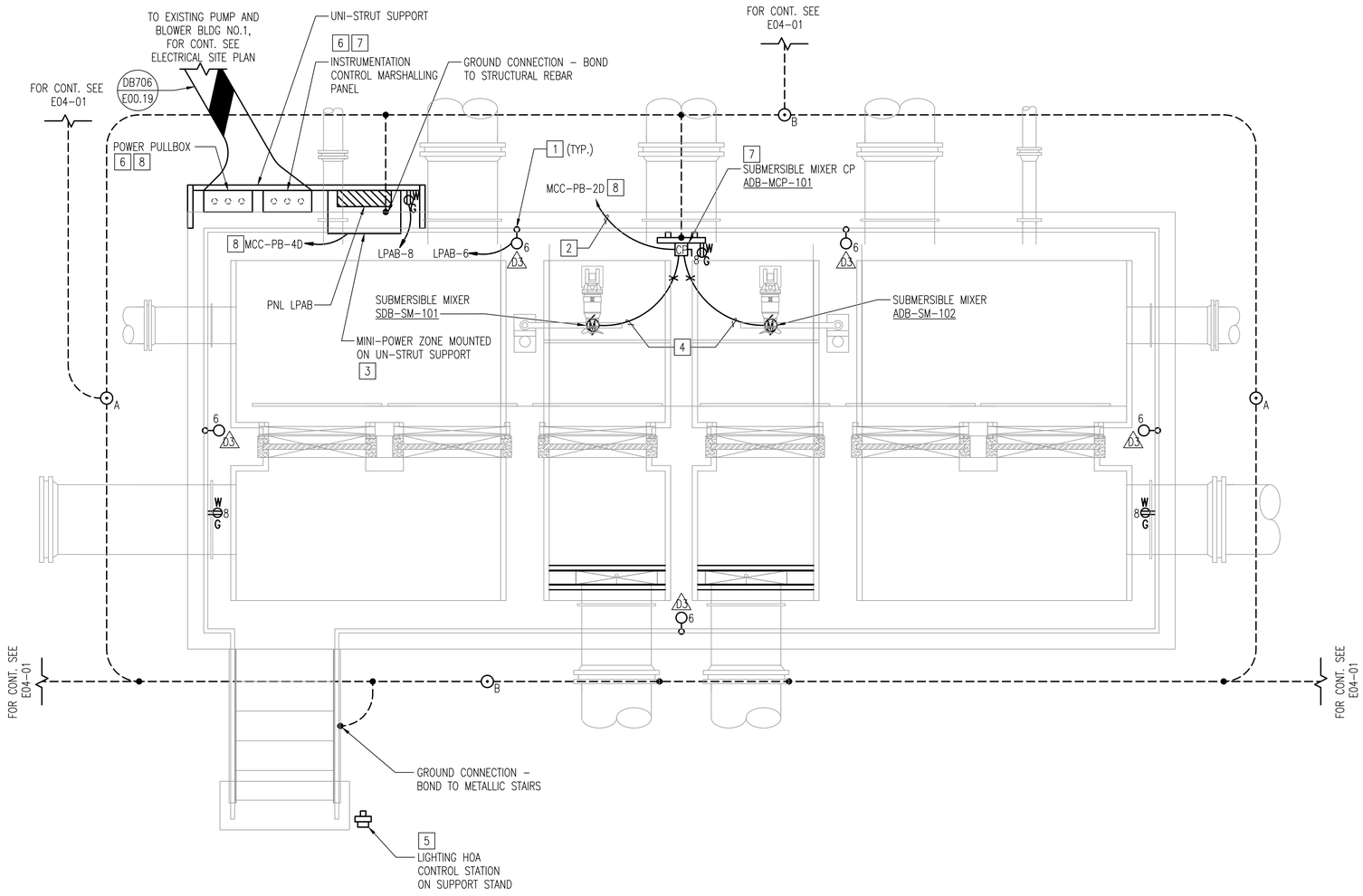

1 / E03.01 AERATION DISTRIBUTION STRUCTURE POWER PLAN
SCALE: 1/2"=1'-0"

GENERAL SHEET NOTES

1. SEE DRAWING E00.01 FOR ELECTRICAL LEGEND.
2. SEE DRAWING E00.02 FOR ELECTRICAL GENERAL NOTES AND ABBREVIATIONS.
3. AERATION DISTRIBUTION STRUCTURE EQUIPMENT POWER IS PROVIDED FROM EXISTING PUMP AND BLOWER BUILDING NO.1, SEE DRAWING E00.06 FOR PARTIAL ONE LINE DIAGRAMS.
4. SEE DRAWING E00.12 FOR LIGHTING FIXTURE SCHEDULE.
5. SEE DRAWING E00.03 FOR ELECTRICAL SITE PLAN.
6. SEE INSTRUMENTATION DRAWINGS AND SPECIFICATIONS FOR CONTROLS.
7. THE AERATION DISTRIBUTION STRUCTURE AREA AND CHANNELS SHALL BE DESIGNATED CLASS I, DIV. 2, GROUP D, HAZARDOUS LOCATION. ALL ELECTRICAL WORK IN THE AREA SHALL CONFORM TO NFPA 820.
8. ALL DISCONNECT SWITCH SHALL BE NEMA 4X AND MOUNTED ABOVE HAZARDIOUS ZONE.
9. ALL JUNCTION BOXES SHALL BE NEMA 4X.
10. LOCAL 120V BRANCH CIRCUITS ARE PROVIDED BY MINI POWER-ZONE PANEL LPAB. SEE DRAWING E00.13 FOR PANEL LPAB SCHEDULE.
11. HANDRAIL MOUNTED RECEPTACLES SHALL BE MOUNTED ABOVE HAZARDOUS ZONE.

SHEET KEYNOTES

1. SEE DETAIL 3/E00.22 FOR STANCHION MOUNTED FIXTURE DETAIL.
2. FEEDERS ROUTED TO PUMP AND EXISTING BLOWER BUILDING NO.1 VIA POWER PULLBOX AND DUCTBANK.
3. MOUNT EQUIPMENT ON SUPPORT RACK WITH BOTTOM OF EQUIPMENT TO BE 6" ABOVE HANDRAIL.
4. CABLE PROVIDED WITH SUBMERSIBLE MIXER. PROVIDE CABLE IN RACEWAY FROM DISCONNECT SWITCH TO AERATION BOX ENTRANCE WITH SEALING FITTING.
5. NEMA 4X SINGLE GANG CONTROL STATION, HAND-OFF-AUTO SWITCH. REFER TO INSTRUMENTATION DRAWINGS FOR CONTROL REQUIREMENTS.
6. PROVIDE STAINLESS STEEL BOX MOUNTED AT 4'-0" ABOVE GRATING TO BOTTOM OF BOX ON UNI-STRUT SUPPORT. BOX TO BE SIZED PER NEC.
7. REFER TO INSTRUMENTATION DRAWINGS FOR ADDITIONAL REQUIREMENTS.
8. POWER FEEDERS SERVED FROM EXISTING MCC-PB SHALL BE ROUTED FROM AERATION DISTRIBUTION BOX TO EXISTING PUMP AND BLOWER BUILDING NO.1 VIA THE POWER PULLBOX AND DUCTBANKS.

REVISIONS

CLIENT INFORMATION

SUSSEX COUNTY, DE
ENGINEERING
DEPARTMENT

INLAND BAYS RWF
PHASE #2 EXPANSION:
CONTRACT S19-10

KEY PLAN

GRAPHIC SCALES

0 1' 2' 4'
SCALE: 1/2" = 1'-0"

SIGNATURE

IL HWAN KIM
LICENSE
No. 19294
DELAWARE
PROFESSIONAL ENGINEER
12-14-18

Whitman, Requardt & Associates, LLP
801 South Caroline Street, Baltimore, Maryland 21231

AERATION DISTRIBUTION STRUCTURE POWER PLAN

DRAWING NO.

E03.01

SCALE: AS SHOWN		
DATE: DEC. 2018	SHEET 161 OF 217	
DES: JPS	DRAWN: SMC	CHECK: IHK

PLOT DATE: 12/14/2018 3:00:19 PM PAGE SETUP: WRA-PDF (36X24) PLOT STYLE: WRA_2006CTB PAPER SIZE:ARCH FULL BLEED D (36.00 X 24.00 INCHES)

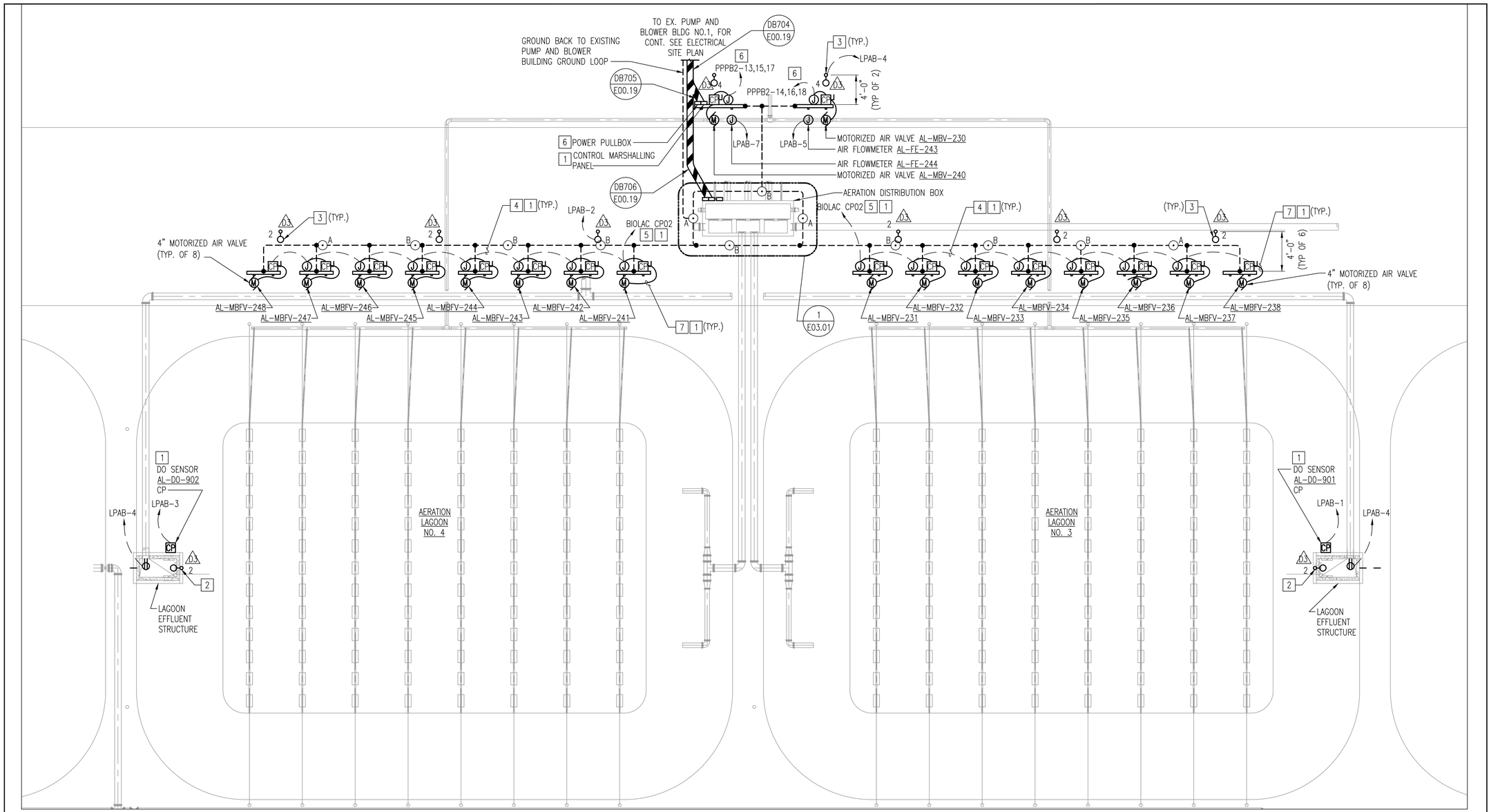

1 / E04.01 AERATION LAGOON 3 AND 4 POWER AND LIGHTING PLAN

SCALE: 1/16" = 1'-0"

GENERAL SHEET NOTES

1. SEE DRAWING E00.01 FOR ELECTRICAL LEGEND.
2. SEE DRAWING E00.02 FOR ELECTRICAL GENERAL NOTES AND ABBREVIATIONS.
3. AERATION LAGOONS NO.3 AND NO.4 EQUIPMENT POWER IS PROVIDED FROM PUMP AND BLOWER BUILDING NO.1, SEE DRAWING E00.06 FOR PARTIAL ONE LINE DIAGRAM.
4. SEE DRAWING E00.12 FOR LIGHTING FIXTURE SCHEDULE.
5. SEE DRAWING E00.03 FOR ELECTRICAL SITE PLAN.
6. SEE INSTRUMENTATION DRAWINGS AND SPECIFICATIONS FOR CONTROLS.
7. THE AERATION LAGOON AREA AREA AND CHANNELS SHALL BE DESIGNATED CLASS I, DIV. 2, GROUP D, HAZARDOUS LOCATION. ALL ELECTRICAL WORK IN THE AREA SHALL CONFORM TO NFPA 820.
8. ALL DISCONNECT SWITCH SHALL BE NEMA 4X AND MOUNTED ABOVE HAZARDIOUS ZONE.
9. ALL JUNCTION BOXES SHALL BE NEMA 4X.
10. LOCAL 120V BRANCH CIRCUITS ARE PROVIDED BY MINI POWER-ZONE PANEL LPAB. THE MINI POWER-ZONE IS LOCATED AT THE AERATION DISTRIBUTION STRUCTURE, REFER TO DRAWING E03.01. SEE DRAWING E00.13 FOR PANEL LPAB SCHEDULE.
11. ALL POWER CONDUITS ARE TO BE ROUTED DIRECTED BURIED BACK TO THE AERATION DISTRIBUTION STRUCTURE FOR ROUTING POWER FEEDERS AND BRANCH CIRCUITS TO POWER SOURCE. CONTRACTOR SHALL SUBMIT SCALED CONDUIT LAYOUT PLANS FOR REVIEW AND APPROVAL PRIOR TO INSTALLATION. COORDINATE FINAL CONDUIT ROUTING WITH OTHER EQUIPMENT ON THE STRUCTURE.
12. SEE DRAWING E00.13 FOR EXISTING PANEL PPPB2 SCHEDULE.
13. LIGHTING IS CONTROLLED BY HOA SWITCH AT THE AERATION DISTRIBUTION BOX.
14. POWER BRANCH CIRCUITS FOR AERATION LAGOONS NO.3 AND NO.4 SHALL BE ROUTED FROM AERATION DISTRIBUTION BOX MINI POWER ZONE BELOW GRADE TO AERATION LAGOONS NO.3 AND NO.4, REFER TO DRAWING E04.01 FOR BRANCH CIRCUITS.

SHEET KEYNOTES

1. REFER TO INSTRUMENTATION DRAWINGS FOR ADDITIONAL REQUIREMENTS.
2. SEE DETAIL 3/E00.22 FOR STANCHION MOUNTED FIXTURE.
3. SEE DETAIL 4/E00.22 FOR BASE MOUNTED FIXTURE. PROVIDE 3' BOLLARD BASE.
4. MOTORIZED AIR VALVES POWER AND CONTROL CONDUIT, PROVIDE 2" CONDUIT BETWEEN JUNCTION BOXES FOR ROUTING OF VALVE POWER & CONTROL CIRCUITS. WIRING IS PROVIDED FROM BIOLAC CONTROL PANEL CP02 IN EXISTING PUMP AND BLOWER BUILDING NO.1.
5. ROUTE 2" DIRECT BURIED CONDUIT TO AERATION DISTRIBUTION BOX INSTRUMENTATION PULLBOX BELOW GRADE FROM AERATION LAGOONS NO.3 AND NO.4.
6. POWER FEEDERS SERVED FROM EXISTING PANEL PPPB2 SHALL BE ROUTED TO EXISTING PUMP AND BLOWER BUILDING NO.1 VIA THE POWER PULLBOX AND DUCTBANKS.
7. PROVIDE 3/4" FLEXIBLE METALLIC CONDUIT WITH POWER AND CONTROL CIRCUITS TO MOTORIZED AIR VALVES.

REVISIONS

CLIENT INFORMATION

SUSSEX COUNTY, DE
ENGINEERING
DEPARTMENT

INLAND BAYS RWF
PHASE #2 EXPANSION:
CONTRACT S19-10

KEY PLAN

GRAPHIC SCALES

0 8' 16' 32'

SCALE: 1/16" = 1'-0"

SIGNATURE

IL HWAN KIM
LICENSE
No. 19294
DELAWARE
PROFESSIONAL ENGINEER
12-14-18

WRA
Whitman, Requardt & Associates, LLP
801 South Caroline Street, Baltimore, Maryland 21231

AERATION LAGOONS POWER AND LIGHTING PLAN

DRAWING NO.

E04.01

SCALE: AS SHOWN		
DATE: DEC. 2018		SHEET 162 OF 217
DES: JPS	DRAWN: KK	CHECK: IHK

Plotted: 14-DEC-2018 09:26 By: KIM
N:\2018\18-06-02\CAD\E04.01.dgn

GENERAL SHEET NOTES

1. SEE DRAWING E00.01 FOR ELECTRICAL LEGEND.
2. SEE DRAWING E00.02 FOR ELECTRICAL GENERAL NOTES AND ABBREVIATIONS.
3. CLARIFIERS AREA EQUIPMENT POWER IS PROVIDED FROM PUMP AND BLOWER BUILDING NO.2, SEE DRAWING E00.08 FOR PUMP AND BLOWER BUILDING NO.2 ONE LINE DIAGRAM.
4. SEE DRAWING E00.12 FOR LIGHTING FIXTURE SCHEDULE.
5. SEE DRAWING E00.03 FOR ELECTRICAL SITE PLAN.
6. SEE INSTRUMENTATION DRAWINGS AND SPECIFICATIONS FOR CONTROLS.
7. THE CLARIFIER AREA AND CHANNELS SHALL BE DESIGNATED CLASS I, DIV. 2, GROUP D, HAZARDOUS LOCATION. ALL ELECTRICAL WORK IN THE AREA SHALL CONFORM TO NFPA 820.
8. ALL DISCONNECT SWITCH SHALL BE NEMA 4X AND MOUNTED ABOVE HAZARDOUS ZONE.
9. ALL JUNCTION BOXES SHALL BE NEMA 4X.
10. ALL HOMERUNS TO PUMP AND BLOWER BUILDING NO.2 VIA POWER PULLBOX AND DUCTBANK.PANEL LPB2 BRANCH CIRCUITS ARE ROUTED TO PUMP AND BLOWER BUILDING NO.2 VIA POWER PULLBOX AND DUCTBANK. SEE DRAWING E00.14 FOR PANEL LPB2 SCHEDULE. SEE DRAWING E08.01 FOR PANEL LPB2 IN PUMP AND BLOWER BUILDING NO.2.
11. HANDRAIL MOUNTED RECEPTACLES SHALL BE MOUNTED ABOVE HAZARDOUS ZONE.

SHEET KEYNOTES

1. SEE DETAIL 3/E00.22 FOR STANCHION MOUNTED FIXTURE DETAIL.
2. FEEDERS ROUTED TO PUMP AND BLOWER BUILDING NO.2 VIA POWER PULLBOX AND DUCTBANK. SEE PUMP AND BLOWER BUILDING NO.2 ONE LINE DIAGRAM ON DRAWING E00.08 FOR EQUIPMENT RATINGS AND FEEDER REQUIREMENTS. SEE DRAWING E08.01 FOR CONTINUATION OF FEEDERS INTO THE PUMP AND BLOWER BUILDING NO.2.
3. EQUIPMENT LOCAL CONTROL SHOWN ON THIS DRAWING FOR REFERENCE AND COORDINATION OF EQUIPMENT ON SUPPORT RACK, REFER TO INSTRUMENTATION DRAWINGS FOR CONTROL AND ADDITIONAL REQUIREMENTS.
4. PROVIDE STAINLESS STEEL BOX MOUNTED MINIMUM OF 3'-0" ABOVE FINISH GRADE TO THE BOTTOM ON UNI-STRUT SUPPORT. BOX TO BE SIZED PER NEC, UON.
5. REFER TO ELECTRICAL SITE PLAN FOR CONTINUATION AND REQUIREMENTS.
6. REFER TO MECHANICAL DRAWINGS FOR HEAT TRACE SYSTEM REQUIREMENTS.
7. PROVIDE CLASS I, GROUP D, DIV. 2 EXPLOSION PROOF RECEPTACLE ENCLOSURE
8. NEMA 4X SINGLE GANG CONTROL STATION, HAND-OFF-AUTO SWITCH. REFER TO INSTRUMENTATION DRAWINGS FOR CONTROL REQUIREMENTS.

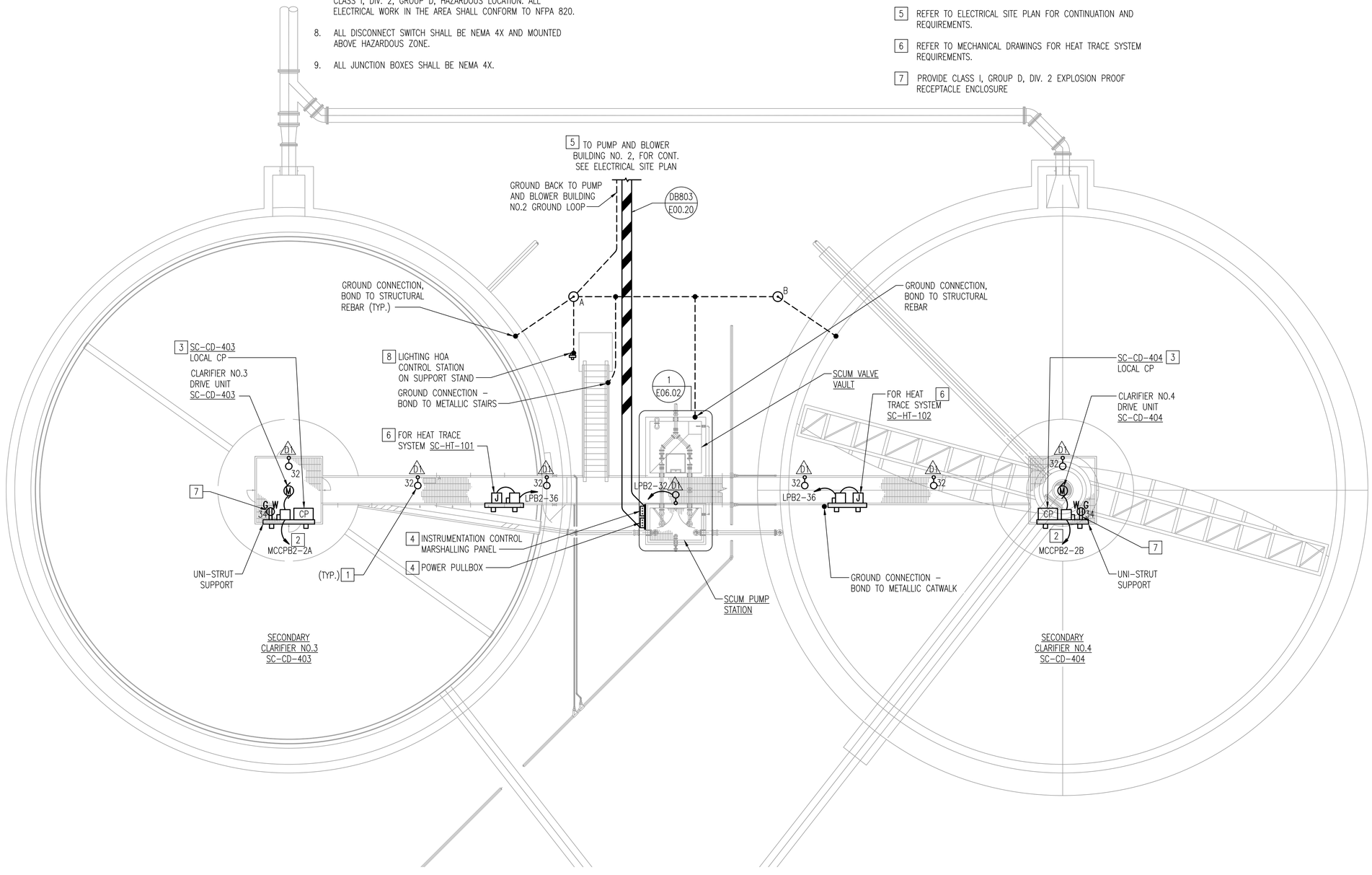

SECONDARY CLARIFIERS POWER AND LIGHTING PLAN

1 / E06.01 SCALE: 1/8"=1'-0"

REVISIONS

CLIENT INFORMATION

SUSSEX COUNTY, DE
ENGINEERING
DEPARTMENT

INLAND BAYS RWF
PHASE #2 EXPANSION:
CONTRACT S19-10

KEY PLAN

GRAPHIC SCALES

0 4' 8' 16'
SCALE: 1/8" = 1'-0"

SIGNATURE

IL HWAN KIM LICENSE No. 19294 DELAWARE PROFESSIONAL ENGINEER
12-14-18

Whitman, Requardt & Associates, LLP
801 South Caroline Street, Baltimore, Maryland 21231

CLARIFIERS
POWER AND LIGHTING PLAN

DRAWING NO.

E06.01

SCALE: AS SHOWN		
DATE: DEC. 2018	SHEET 163 OF 217	
DES: JPS	DRAWN: KK	CHECK: IHK

PLOT DATED 12/14/2018 3:00:28 PM PAGE SETUP\ VRA-PDF C&G(24) PLOT STYLE\ VRA_2006.CTB PAPER SIZE\ANSI FULL BLEED D (36.00 X 24.00 INCHES)

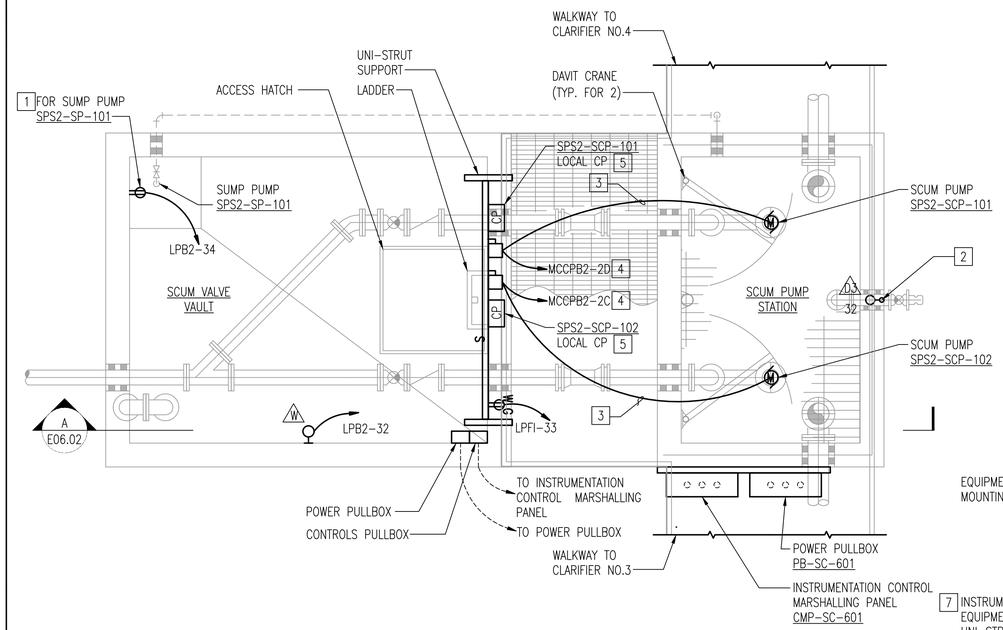

1 / E06.02 SCUM PUMP STATION AND VALVE VAULT
SCALE: 1/2"=1'-0"

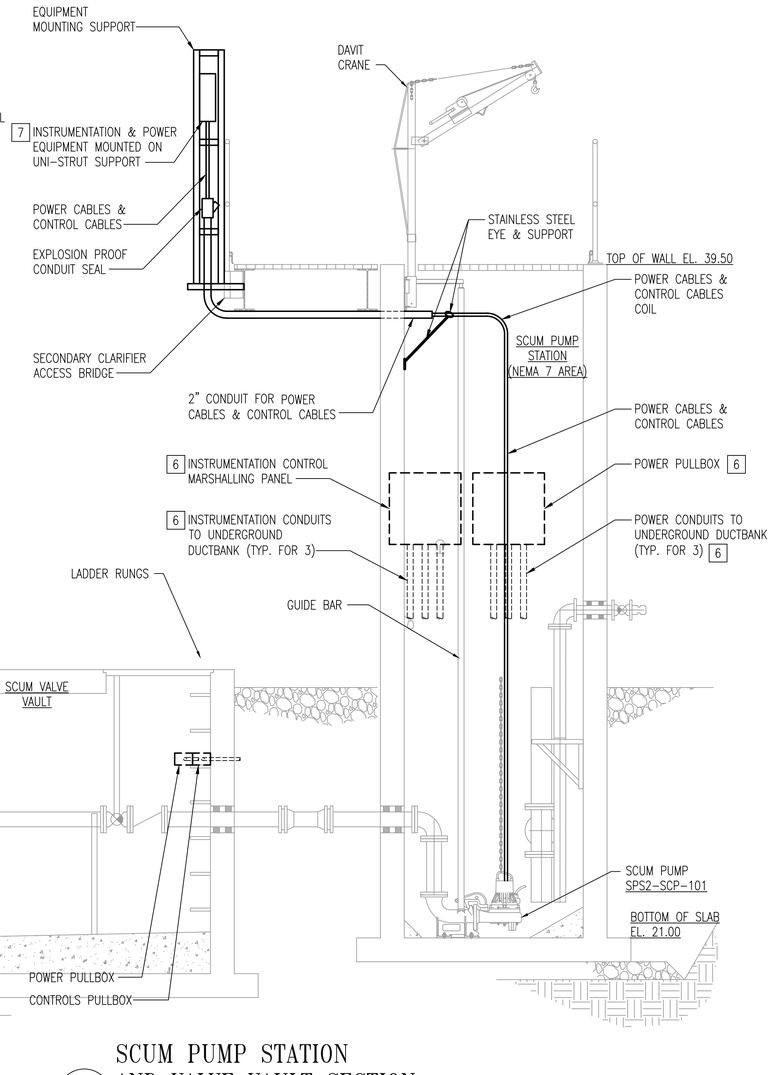

A / E06.02 SCUM PUMP STATION AND VALVE VAULT SECTION
SCALE: 1/2"=1'-0"

GENERAL SHEET NOTES

1. SEE DRAWING E00.01 FOR ELECTRICAL LEGEND.
2. SEE DRAWING E00.02 FOR ELECTRICAL GENERAL NOTES AND ABBREVIATIONS.
3. SCUM PUMP STATION AND VALVE VAULT EQUIPMENT POWER IS PROVIDED FROM PUMP AND BLOWER BUILDING NO.2, SEE DRAWING E00.08 FOR PUMP AND BLOWER BUILDING NO.2 ONE LINE DIAGRAM.
4. SEE DRAWING E00.12 FOR LIGHTING FIXTURE SCHEDULE.
5. SEE DRAWING E00.03 FOR ELECTRICAL SITE PLAN.
6. SEE INSTRUMENTATION DRAWINGS AND SPECIFICATIONS FOR CONTROLS.
7. THE SCUM PUMP STATION, VALVE VAULT AND CHANNELS SHALL BE DESIGNATED CLASS I, DIV. 2, GROUP D, HAZARDOUS LOCATION. ALL ELECTRICAL WORK IN THE AREA SHALL CONFORM TO NFPA 820.
8. ALL DISCONNECT SWITCH SHALL BE NEMA 4X AND MOUNTED ABOVE HAZARDIOUS ZONE.
9. ALL JUNCTION BOXES SHALL BE NEMA 4X.
10. ALL HOMERUNS TO PUMP AND BLOWER BUILDING NO.2 VIA POWER PULLBOX AND DUCTBANK.PANEL LPB2 BRANCH CIRCUITS ARE ROUTED TO PUMP AND BLOWER BUILDING NO.2 VIA POWER PULLBOX AND DUCTBANK. SEE DRAWING E00.14 FOR PANEL LPB2 SCHEDULE. SEE DRAWING E08.01 FOR PANEL LPB2 IN PUMP AND BLOWER BUILDING NO.2.
11. HANDRAIL MOUNTED RECEPTACLES SHALL BE MOUNTED ABOVE HAZARDOUS ZONE.

SHEET KEYNOTES

1. PROVIDE CLASS I, DIV. 2, GROUP D, ENCLOSURE INTERLOCKED 30A RECEPTACLE FOR OWNER SUPPLIED SUMP PUMP. COORDINATE FINAL MOUNTING LOCATION WITH LENGTH OF SUMP PUMP POWER CORD.
2. SEE DETAIL 3/E00.22 FOR STANCHION MOUNTED FIXTURE DETAIL.
3. CABLE PROVIDED WITH SCUM PUMP.
4. FEEDERS ROUTED TO PUMP AND BLOWER BUILDING NO.2 VIA POWER PULLBOX AND DUCTBANK. SEE PUMP AND BLOWER BUILDING NO.2 ONE LINE DIAGRAM ON DRAWING E00.08 FOR EQUIPMENT RATINGS AND FEEDER REQUIREMENTS. SEE DRAWING E08.01 FOR CONTINUATION OF FEEDERS INTO THE PUMP AND BLOWER BUILDING NO.2.
5. EQUIPMENT LOCAL CONTROL SHOWN ON THIS DRAWING FOR REFERENCE AND COORDINATION OF EQUIPMENT ON SUPPORT RACK, REFER TO INSTRUMENTATION DRAWINGS FOR CONTROL AND ADDITIONAL REQUIREMENTS.
6. EQUIPMENT MOUNTED ON EXTERIOR WALL SHOWN HERE FOR REFERENCE. REFER TO PLANS FOR REQUIREMENTS.
7. REFER TO PLAN FOR ELECTRICAL EQUIPMENT THAT SHALL BE MOUNTED ON EQUIPMENT SUPPORT. REFER TO INSTRUMENTATION DRAWINGS FOR CONTROL EQUIPMENT. MOUNT EQUIPMENT WITH BOTTOM OF EQUIPMENT TO BE A MINIMUM OF 6" ABOVE HANDRAIL, UON.

REVISIONS

CLIENT INFORMATION

SUSSEX COUNTY, DE
ENGINEERING
DEPARTMENT

INLAND BAYS RWF
PHASE #2 EXPANSION:
CONTRACT S19-10

KEY PLAN

GRAPHIC SCALES

0 1' 2' 4'
SCALE: 1/2" = 1'-0"

SIGNATURE

IL HWAN KIM
LICENSE
No. 19294
DELAWARE
PROFESSIONAL ENGINEER
12-14-18

Whitman, Requardt & Associates, LLP
801 South Caroline Street, Baltimore, Maryland 21231

CLARIFIERS - SCUM PUMP STATION
POWER & LIGHTING

DRAWING NO.

E06.02

SCALE: AS SHOWN		
DATE: DEC. 2018	SHEET 164 OF 217	
DES: JPS	DRAWN: KK	CHECK: IHK

PLOT DATE: 12/14/2018 3:03:05 PM PAGE SETUP: WRA-PDF (36X24) PLOT STYLE: WRA_2006.CTB PAPER SIZE:ARCH FULL BLEED D (36.00 X 24.00 INCHES)

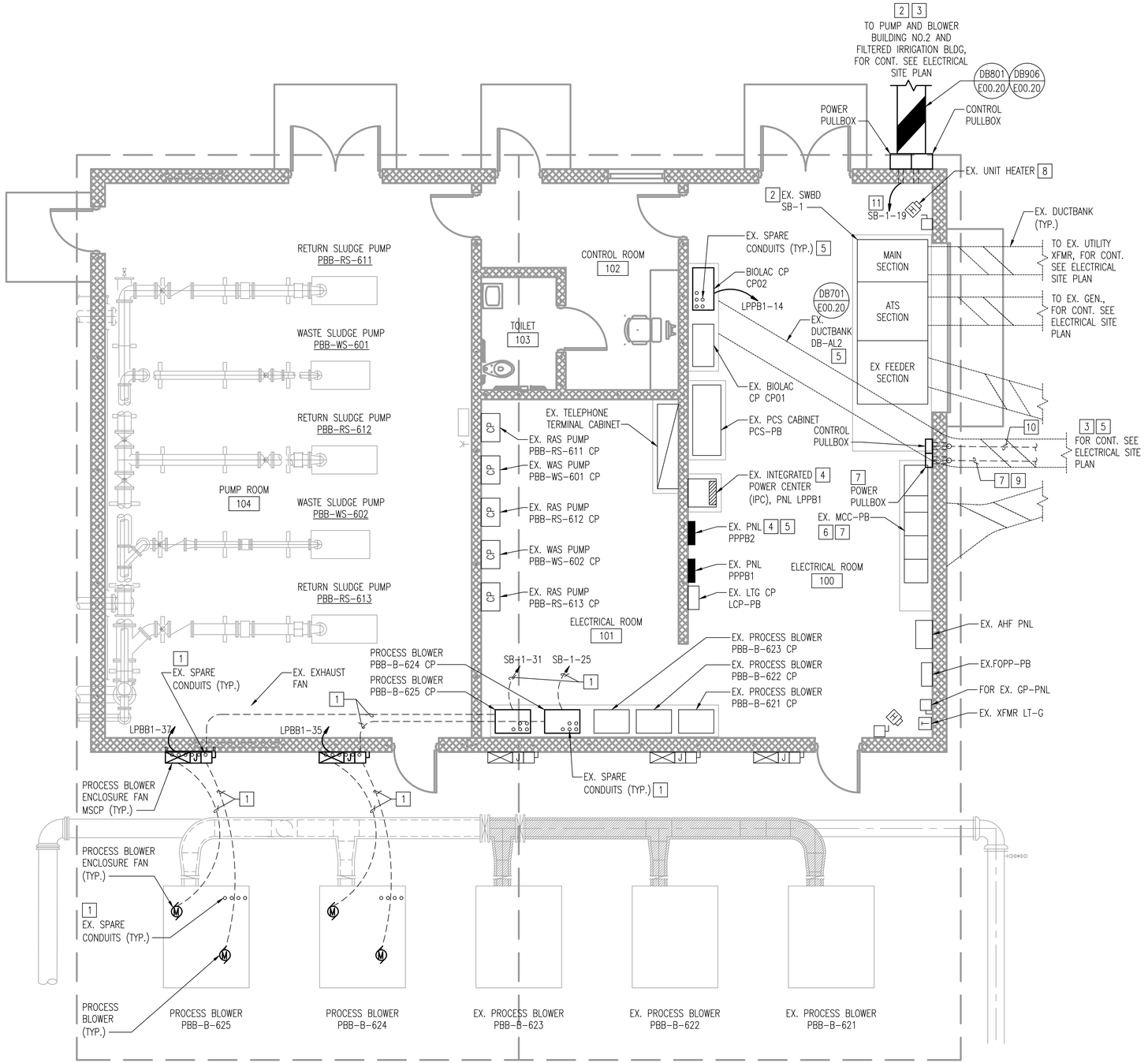

1 E07.01 EXISTING PUMP AND BLOWER BUILDING NO.1 POWER PLAN

SCALE: 1/4" = 1'-0"

GENERAL SHEET NOTES

1. SEE DRAWING E00.01 FOR ELECTRICAL LEGEND.
2. SEE DRAWING E00.02 FOR GENERAL NOTES AND ABBREVIATIONS.
3. SEE EXISTING PUMP AND BLOWER BUILDING NO.1 PARTIAL ONE LINE DIAGRAM ON DRAWING E00.06 FOR EQUIPMENT RATINGS AND FEEDER REQUIREMENTS.
4. SEE DRAWING E00.13 FOR PANEL SCHEDULES.
5. SEE INSTRUMENTATION AND CONTROL DRAWINGS AND SPECIFICATIONS FOR ADDITIONAL DETAILS AND REQUIREMENTS.
6. EXISTING EQUIPMENT TO REMAIN UNDISTURBED, UON.
7. PROVIDE FIRESTOP FOR CONDUIT WALL PENETRATIONS.
8. ALL EXTERIOR PULLBOXES SHALL BE NEMA 4X.

SHEET KEY NOTES

1. PULL WIRE THROUGH EXISTING SPARE CONDUITS. REFER TO EXISTING PUMP AND BLOWER BUILDING NO.1 PARTIAL ONE LINE DIAGRAM AND PROCESS BLOWER RISER DIAGRAM ON DRAWING E00.06 FOR FEEDER REQUIREMENTS.
2. REMOVE EXISTING CIRCUITS BREAKERS AS INDICATED ON THE EXISTING PUMP AND BLOWER BUILDING NO.1 ONE LINE DIAGRAM FROM SWITCHBOARD SB-1 AND PROVIDE ONE NEW CIRCUIT BREAKER TO PROVIDE ELECTRICAL SERVICE TO NEW PUMP AND BLOWER BUILDING NO. 2. REFER TO ONE LINE DIAGRAM ON DRAWING E00.06 FOR ADDITIONAL REQUIREMENTS.
3. SEE SITE PLAN DRAWING E00.03 FOR CONTINUATION.
4. PROVIDE NEW BRANCH CIRCUITS IN EXIST PANEL, REFER TO PANEL SCHEDULE FOR EXISTING AND NEW CIRCUITS.
5. ROUTE NEW BRANCH CIRCUITS FROM EXISTING PANEL TO NEW AERATION LAGOONS VIA EXISTING DUCTBANKS/HANDHOLES AND NEW DUCTBANKS/HANDHOLES RACE SYSTEM. REFER TO SITE PLAN AND NEW AERATION LAGOONS ELECTRICAL DRAWINGS FOR COORDINATION AND ADDITIONAL REQUIREMENTS.
6. PROVIDE NEW FEEDERS IN EXISTING MCC-PB FOR NEW AERATION DISTRIBUTION BOX SUBMERSIBLE MIXERS AND AERATION DISTRIBUTION BOX MINI POWER-ZONE PANEL LPAB. REFER TO 3/E00.6 FOR PARTIAL ONE LINE DIAGRAN AND DRAWING E00.07 FOR EXISTING MCC-PB ELEVATION.
7. ROUTE NEW BRANCH CIRCUIT FROM EXISTING MCC-PB FOR NEW AERATION DISTRIBUTION BOX SUBMERSIBLE MIXERS CONTROL PANEL VIA NEW PULLBOX AND UNDERGROUND RACEWAY SYSTEM. REFER TO SITE PLAN AND NEW AERATION DISTRIBUTION BOX ELECTRICAL DRAWINGS FOR COORDINATION AND ADDITIONAL REQUIREMENTS.
8. RELOCATE EXISTING ELECTRIC UNIT HEATER AS REQUIRED TO ACCOMMODATE NEW FEEDER AND CONTROL CONDUITS TO NEW BLOWER BUILDING NO.2
9. (1)-2" DIRECT BURIED CONDUIT ROUTED ABOVE EXISTING DUCTBANK TO EXISTING MANHOLE FOR NEW AERATION DISTRIBUTION BOX SUBMERSIBLE MIXERS CONTROL PANEL AND MINI POWER-ZONE PANEL LPAB CONDUCTORS.
10. (2)-2" DIRECT BURIED CONDUIT ROUTED ABOVE EXISTING DUCTBANK TO EXISTING MANHOLE FOR CONTROLS, REFER TO INSTRUMENTATION DRAWINGS FOR WIRING.
11. PUMP AND BLOWER BUILDING NO.2 SERVICE FEEDER, "801," REFER TO PUMP AND BLOWER BUILDING NO.2 ONE LINE DIAGRAM ON E00.08 FOR FEEDER REQUIREMENTS. ROUTE FEEDER FROM POWER PULLBOX TO EXISTING SWITCHBOARD SB-1 OVERHEAD. COORDINATE ROUTING WITH EXISTING CONDITIONS.

REVISIONS

CLIENT INFORMATION

SUSSEX COUNTY, DE ENGINEERING DEPARTMENT

INLAND BAYS RWF PHASE #2 EXPANSION: CONTRACT S19-10

KEY PLAN

GRAPHIC SCALES

0 2' 4' 8'

SCALE: 1/4" = 1'-0"

SIGNATURE

IL HWAN KIM LICENSE No. 19294 DELAWARE PROFESSIONAL ENGINEER

12-14-18

Whitman, Requardt & Associates, LLP
801 South Caroline Street, Baltimore, Maryland 21231

EXISTING PUMP AND BLOWER BUILDING NO. 1 POWER PLAN

DRAWING NO.

E07.01

SCALE: AS SHOWN		
DATE: DEC. 2018	SHEET 165 OF 217	
DES: JPS	DRAWN: KK	CHECK: IHK

PLOT DATE: 12/14/2018 3:00:40 PM PAGE SETUP: WRA-PDF (36X24) PLOT STYLE: WRA_2004.CTB PAPER SIZE:ARCH FULL BLEED D (36.00 X 24.00 INCHES)

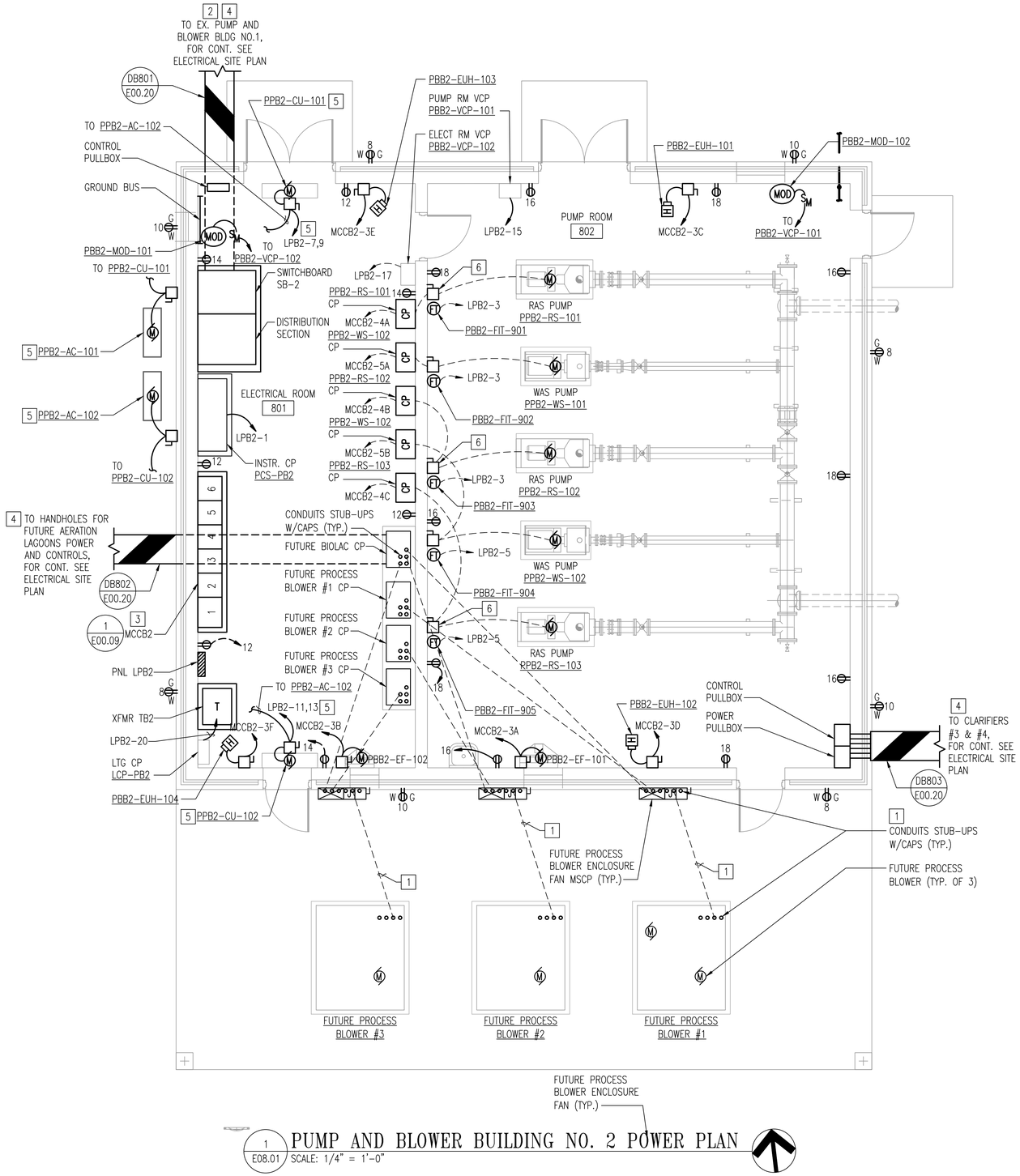

1 E08.01 PUMP AND BLOWER BUILDING NO. 2 POWER PLAN
SCALE: 1/4" = 1'-0"

GENERAL SHEET NOTES

1. SEE DRAWING E00.01 FOR ELECTRICAL LEGEND.
2. SEE DRAWING E00.02 FOR GENERAL NOTES AND ABBREVIATIONS.
3. SEE PUMP AND BLOWER BUILDING NO. 2 ONE LINE DIAGRAM ON DRAWING E00.08 FOR EQUIPMENT RATINGS AND FEEDER REQUIREMENTS, UON.
4. SEE DRAWING E00.14 FOR PANEL SCHEDULES.
5. SEE INSTRUMENTATION AND CONTROL DRAWINGS AND SPECIFICATIONS FOR ADDITIONAL DETAILS AND REQUIREMENTS.
6. PROVIDE PULL STRING WITH ALL SPARE CONDUITS.
7. PROVIDE NEMA 4X DISCONNECT SWITCHES FOR ALL EXTERIOR SWITCHES.
8. ALL RECEPTACLES ARE SERVED FROM PANEL LPB2, NUMBER INDICATED WITH RECEPTACLE IS CIRCUIT NUMBER IN PANEL.

SHEET KEY NOTES

1. PROVIDE SPARE CONDUITS AND STUB UPS FOR FUTURE CONNECTION OF EQUIPMENT. SEE PROCESS BLOWER SYSTEM CONDUIT RISER DIAGRAM 2/E00.08 FOR SPARE CONDUIT REQUIREMENTS.
2. ELECTRICAL SERVICE TO NEW PUMP AND BLOWER BUILDING NO. 2 PROVIDED FROM EXISTING SWITCHBOARD SB-1 IN EXISTING PUMP AND BLOWER BUILDING NO. 1. REFER TO ONE LINE DIAGRAM FOR REQUIREMENTS.
3. COORDINATE FINAL LOCATION OF MCCB2 WITH BUILDING STRUCTURAL MEMBERS.
4. SEE SITE PLAN DRAWING E00.03 FOR CONTINUATION.
5. SPLIT A/C UNIT POWER TO EXTERIOR UNIT PROVIDED FROM INTERIOR UNIT. PROVIDE 2 #10, 1 #10G IN 3/4"C. PROVIDE 1"C WITH CONTROL WIRES AS SPECIFIED BY MFR FOR COMMUNICATION/CONTROL BETWEEN THE INTERIOR AND EXTERIOR UNIT.
6. 3 POLE, 60 AMP DISCONNECT.

REVISIONS

CLIENT INFORMATION

SUSSEX COUNTY, DE ENGINEERING DEPARTMENT

INLAND BAYS RWF PHASE #2 EXPANSION: CONTRACT S19-10

KEY PLAN

GRAPHIC SCALES

0 2' 4' 8'
SCALE: 1/4" = 1'-0"

SIGNATURE

IL HWAN KIM LICENSE No. 19294 DELAWARE PROFESSIONAL ENGINEER
12-14-18

Whitman, Requardt & Associates, LLP
801 South Caroline Street, Baltimore, Maryland 21231

PUMP AND BLOWER BUILDING NO.2 - POWER PLAN

DRAWING NO.

E08.01

SCALE: AS SHOWN		
DATE: DEC. 2018	SHEET 166 OF 217	
DES: JPS	DRAWN: KK	CHECK: IHK

PLOT DATE: 12/14/2018 3:00:44 PM PAGE SETUP: WRA-PDF (36X24) PLOT STYLE: WRA_2006CTB PAPER SIZE:ARCH FULL BLEED D (36.00 X 24.00 INCHES)

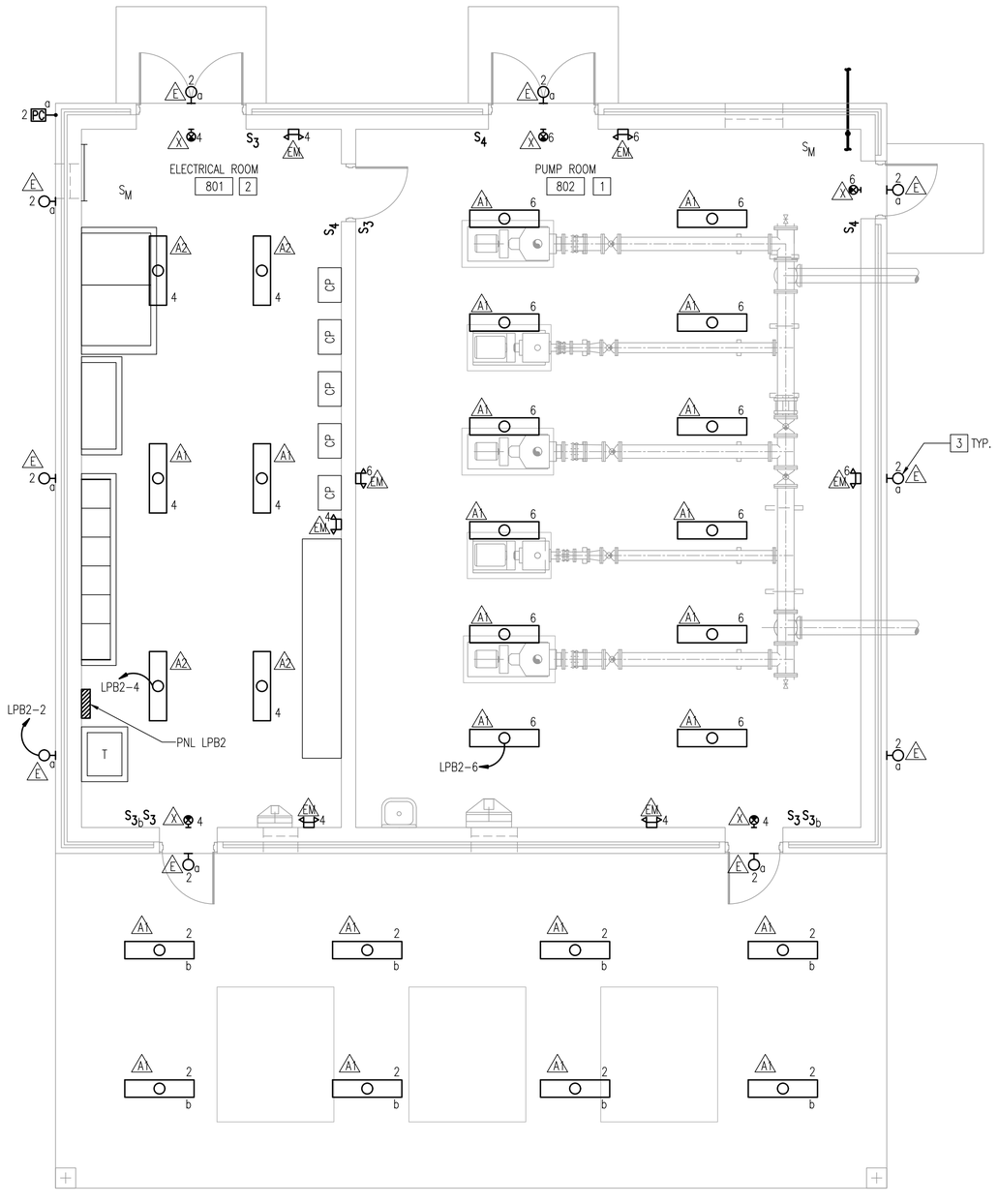

1 E08.02 PUMP AND BLOWER BUILDING NO. 2 LIGHTING PLAN

SCALE: 1/4" = 1'-0"

GENERAL SHEET NOTES

1. SEE DRAWING E00.01 FOR ELECTRICAL LEGEND.
2. SEE DRAWING E00.02 FOR GENERAL NOTES AND ABBREVIATIONS.
3. SEE DRAWING E00.12 FOR LIGHTING FIXTURE SCHEDULE.
4. ALL LIGHTING FIXTURES ARE CIRCUITED TO PANEL LPB2. SEE DRAWING E00.14 FOR PANEL LPB2 SCHEDULE.
5. CONNECT ALL EMERGENCY LIGHTING FIXTURES TO THE UNSWITCHED LEG OF THE CIRCUIT.

SHEET KEY NOTES

1. MOUNT TYPE A1 LIGHT FIXTURES IN THE PUMP ROOM AT 14'-6" AFF.
2. MOUNT TYPE A1 & A2 LIGHT FIXTURES IN THE ELECTRICAL ROOM AT 14'-6" AFF.
3. MOUNT TYPE E LIGHT FIXTURES AT 10'-0" AFF.

REVISIONS

CLIENT INFORMATION

SUSSEX COUNTY, DE
ENGINEERING
DEPARTMENT

INLAND BAYS RWF
PHASE #2 EXPANSION:
CONTRACT S19-10

KEY PLAN

GRAPHIC SCALES

0 2' 4' 8'

SCALE: 1/4" = 1'-0"

SIGNATURE

IL HWAN KIM
LICENSE
No. 19294
DELAWARE
PROFESSIONAL ENGINEER
12-14-18

Whitman, Requardt & Associates, LLP
801 South Caroline Street, Baltimore, Maryland 21231

PUMP AND BLOWER
BUILDING NO.2 - LIGHTING PLAN

DRAWING NO.

E08.02

SCALE: AS SHOWN		
DATE: DEC. 2018	SHEET 167 OF 217	
DES: JPS	DRAWN: KK	CHECK: IHK

PLOT DATE: 12/14/2018 3:00:48 PM PAGE SETUP: VRA-PDF C36X24D PLOT STYLE: VRA_2006.CTB PAPER SIZE:ARCH FULL BLEED D (36.00 X 24.00 INCHES)

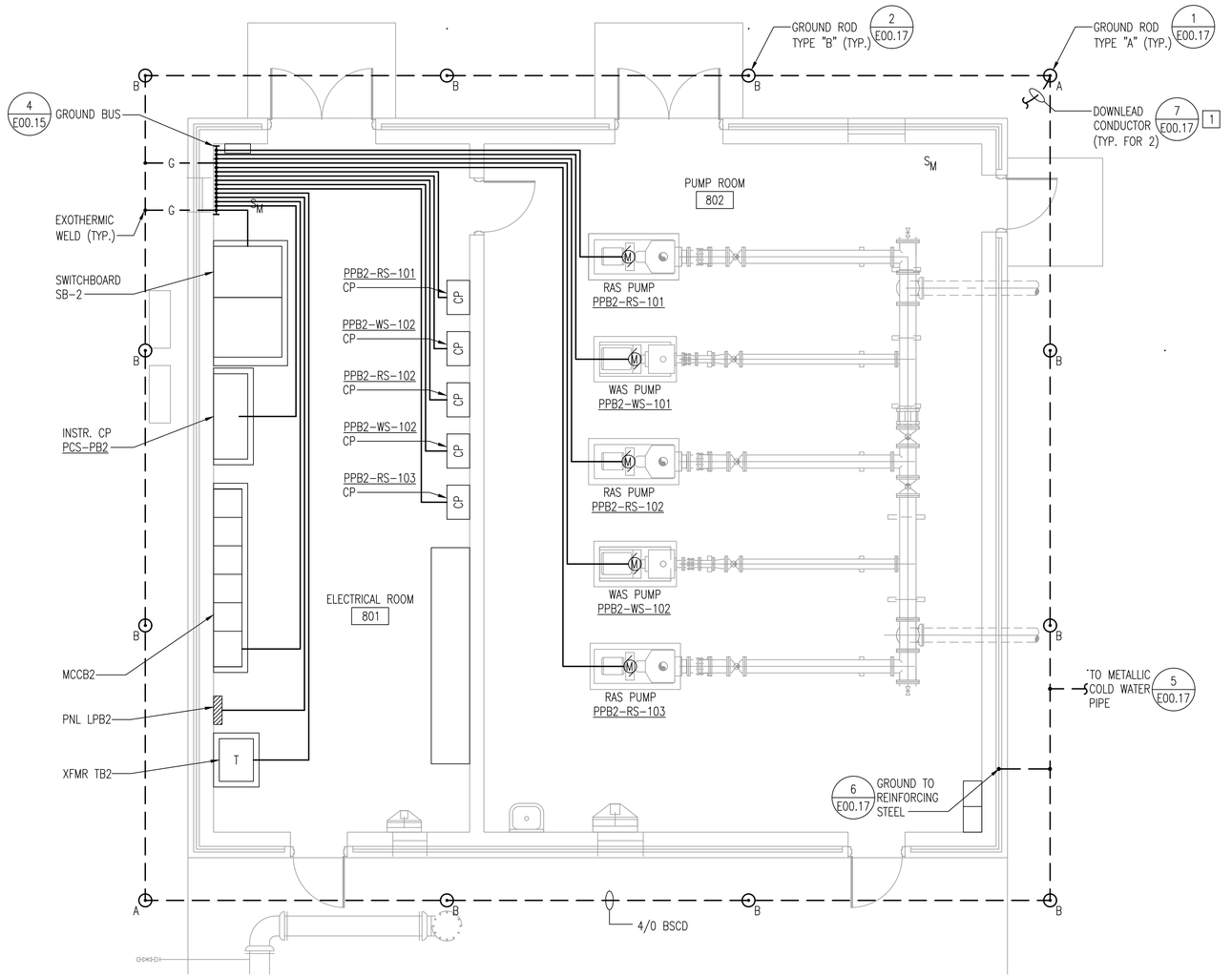

1 E08.01 PUMP AND BLOWER BUILDING NO. 2 GROUNDING PLAN

SCALE: 1/4" = 1'-0"

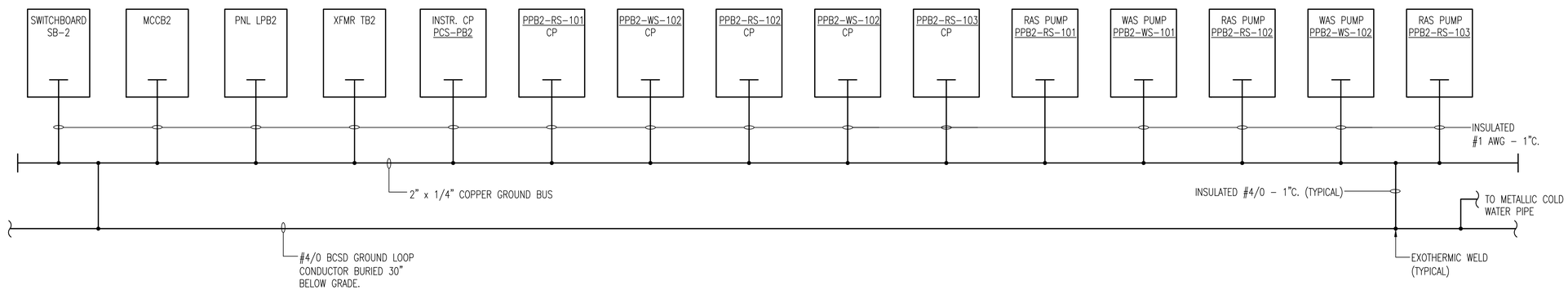

2 E08.01 PUMP AND BLOWER BUILDING NO. 2 GROUNDING RISER DIAGRAM

SCALE: NONE

GENERAL SHEET NOTES

1. SEE DRAWING E00.01 FOR ELECTRICAL LEGEND.
2. SEE DRAWING E00.02 FOR GENERAL NOTES AND ABBREVIATIONS.

SHEET KEY NOTES

1 DOWNLEAD CONDUCTOR TO THE LIGHTING PROTECTION SYSTEM LOCATED ON ROOF. SEE LIGHTNING PROTECTION SPEC FOR LIGHTING PROTECTION SYSTEM REQUIREMENTS.

REVISIONS

CLIENT INFORMATION

SUSSEX COUNTY, DE ENGINEERING DEPARTMENT

INLAND BAYS RWF PHASE #2 EXPANSION: CONTRACT S19-10

KEY PLAN

GRAPHIC SCALES

0 2' 4' 8'

SCALE: 1/4" = 1'-0"

SIGNATURE

IL HWAN KIM LICENSE No. 19294 DELAWARE PROFESSIONAL ENGINEER

12-14-18

Whitman, Requardt & Associates, LLP
801 South Caroline Street, Baltimore, Maryland 21231

PUMP AND BLOWER BUILDING NO.2 GROUNDING PLAN & DIAGRAM

DRAWING NO.

E08.03

SCALE: AS SHOWN		
DATE: DEC. 2018	SHEET 168 OF 217	
DES: JPS	DRAWN: KK	CHECK: IHK

PLOT DATE: 12/14/2018 3:03:53 PM PAGE SETUP: WRA-PSF C36X24 PLOT STYLE: WRA_2006.CTB PAPER SIZE:ARCH FULL BLEED D (36.00 X 24.00 INCHES)

GENERAL SHEET NOTES

1. SEE DRAWING E00.01 FOR ELECTRICAL LEGEND.
2. SEE DRAWING E00.02 FOR GENERAL NOTES AND ABBREVIATIONS.
3. SEE FILTERED IRRIGATION PUMP STATION ONE LINE DIAGRAM ON DRAWING E00.10 FOR EQUIPMENT RATINGS.
4. SEE DRAWING E00.11 FOR CONDUIT AND CABLE SCHEDULE.
5. SEE DRAWING E00.03 FOR ELECTRICAL SITE PLAN.
6. SEE DRAWING E00.14 FOR PANEL LPFI SCHEDULE.
7. SEE INSTRUMENTATION AND CONTROL DRAWINGS AND SPECIFICATIONS FOR ADDITIONAL DETAILS AND REQUIREMENTS.
8. PROVIDE PULL STRING WITH ALL SPARE CONDUITS.
9. PROVIDE NEMA 4X DISCONNECT SWITCHES FOR ALL EXTERIOR SWITCHES.
10. ALL RECEPTACLES ARE SERVED FROM PANEL LPFI, NUMBER INDICATED WITH RECEPTACLE IS CIRCUIT NUMBER IN PANEL.

SHEET KEY NOTES

1. COORDINATE FINAL LOCATION OF MCCFI WITH BUILDING STRUCTURAL MEMBERS.
2. SEE SITE PLAN DRAWING E00.03 FOR CONTINUATION.
3. SPLIT A/C UNIT POWER TO EXTERIOR UNIT PROVIDED FROM INTERIOR UNIT. PROVIDE 2 #10, 1 #10G IN 3/4"C. PROVIDE 1"C WITH CONTROL WIRES AS SPECIFIED BY MFR FOR COMMUNICATION/CONTROL BETWEEN THE INTERIOR AND EXTERIOR UNIT.
4. CABLE PROVIDED WITH DRAINAGE PUMP. PROVIDE CABLE IN RACEWAY FROM CONTROL PANEL TO WELL ENTRANCE WITH SEALING FITTING.
5. PROVIDE 2#8, 1#10G IN 3/4"C.
6. SPACE FOR FUTURE 3P-400A DISCONNECT SWITCH.
7. 3" EMPTY CONDUIT FLUSH WITH FINISHED FLOOR AND CAPPED AT EACH END FOR FUTURE USE.

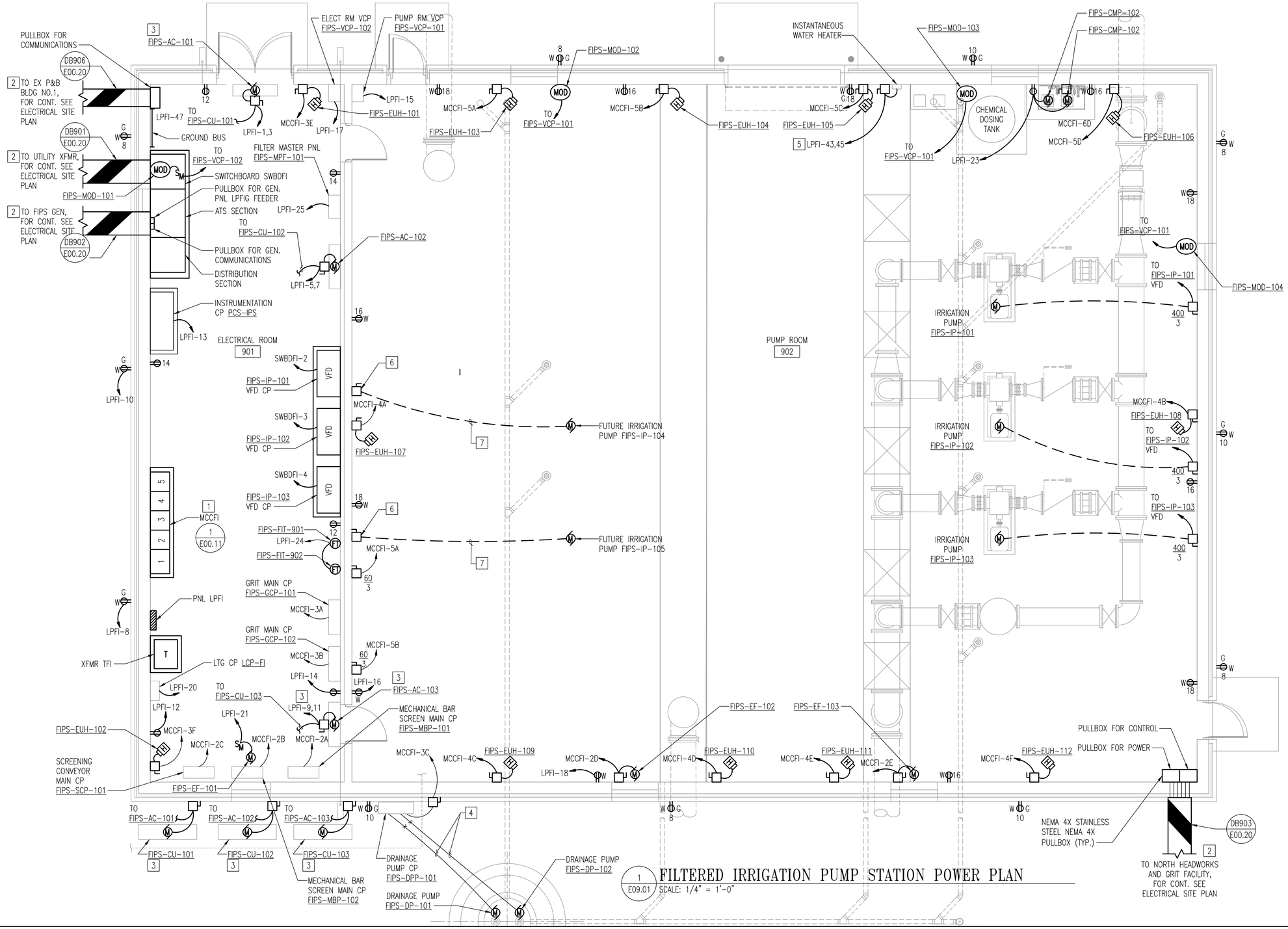

1 E09.01 FILTERED IRRIGATION PUMP STATION POWER PLAN
SCALE: 1/4" = 1'-0"

REVISIONS		

CLIENT INFORMATION

SUSSEX COUNTY, DE
ENGINEERING DEPARTMENT

INLAND BAYS RWF
PHASE #2 EXPANSION:
CONTRACT S19-10

KEY PLAN

GRAPHIC SCALES

0 2' 4' 8'
SCALE: 1/4" = 1'-0"

SIGNATURE

IL HWAN KIM LICENSE No. 19204 DELAWARE PROFESSIONAL ENGINEER
7-10-19

WRA
Whitman, Requardt & Associates, LLP
801 South Caroline Street, Baltimore, Maryland 21231

FILTERED IRRIGATION PUMP STATION POWER PLAN

DRAWING NO.

E09.01

SCALE: AS SHOWN		
DATE: JULY 2019		SHEET 169 OF 229
DES: JPS	DRAWN: KK	CHECK: IHK

PLOT DATED: 7/10/2019 10:05:56 AM PAGE SETUP: VRA-PSF (36X24) PLOT STYLE: VRA_2006.CTB PAPER SIZE:ARCH FULL BLEED D (36.00 X 24.00 INCHES)

GENERAL SHEET NOTES

1. SEE DRAWING E00.01 FOR ELECTRICAL LEGEND.
2. SEE DRAWING E00.02 FOR GENERAL NOTES AND ABBREVIATIONS.
3. SEE DRAWING E00.12 FOR LIGHTING FIXTURE SCHEDULE.
4. ALL LIGHTING FIXTURES ARE CIRCUITED TO PANEL LPFI. SEE DRAWING E00.14 FOR PANEL LPFI SCHEDULE.
5. CONNECT ALL EMERGENCY LIGHTING FIXTURES TO THE UNSWITCHED LEG OF THE CIRCUIT.

SHEET KEY NOTES

1. ALL TYPE "B" LIGHTING FIXTURE MOUNTING HEIGHT 14'-6" WITHIN THE BOUNDARY.
2. MOUNT TYPE E LIGHT FIXTURES AT 10'-0" AFF.

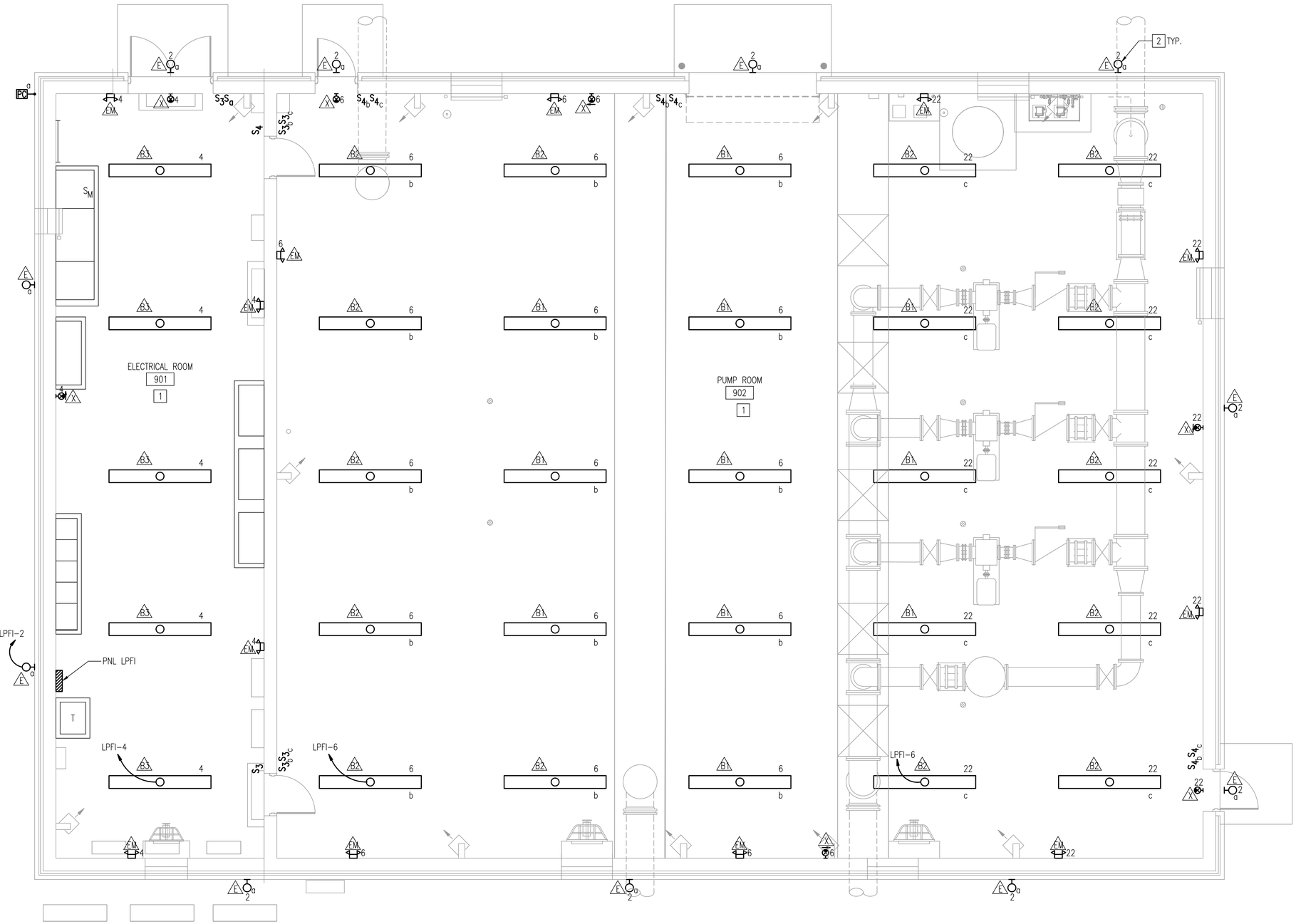

1 E09.02 FILTERED IRRIGATION PUMP STATION LIGHTING PLAN
SCALE: 1/4" = 1'-0"

REVISIONS		

CLIENT INFORMATION

SUSSEX COUNTY, DE
ENGINEERING
DEPARTMENT

INLAND BAYS RWF
PHASE #2 EXPANSION:
CONTRACT S19-10

KEY PLAN

GRAPHIC SCALES

0 2' 4' 8'
SCALE: 1/4" = 1'-0"

SIGNATURE

IL HWAN KIM
LICENSE
No. 15204
DELAWARE
PROFESSIONAL ENGINEER
7-10-19

Whitman, Requardt & Associates, LLP
801 South Caroline Street, Baltimore, Maryland 21231

FILTERED IRRIGATION PUMP STATION
LIGHTING PLAN

DRAWING NO.

E09.02

SCALE: AS SHOWN		
DATE: JULY 2019	SHEET 170 OF 229	
DES: JPS	DRAWN: KK	CHECK: IHK

PLOT DATED: 7/12/2019 10:40:34 AM PAGE SETUP> WRA-PDF (36X24) PLOT STYLE> WRA_2006.CTB PAPER SIZE>ARCH FULL BLEED D (36.00 X 24.00 INCHES)

GENERAL SHEET NOTES

1. SEE DRAWING E00.01 FOR ELECTRICAL LEGEND.
2. SEE DRAWING E00.02 FOR GENERAL NOTES AND ABBREVIATIONS.

SHEET KEY NOTES

1. DOWNLEAD CONDUCTOR TO THE LIGHTING PROTECTION SYSTEM LOCATED ON ROOF. SEE LIGHTNING PROTECTION SPEC FOR LIGHTING PROTECTION SYSTEM REQUIREMENTS.
2. 1" EMPTY CONDUIT FOR FUTURE USE.
3. CAP CONDUIT FLUSH WITH FLOOR.

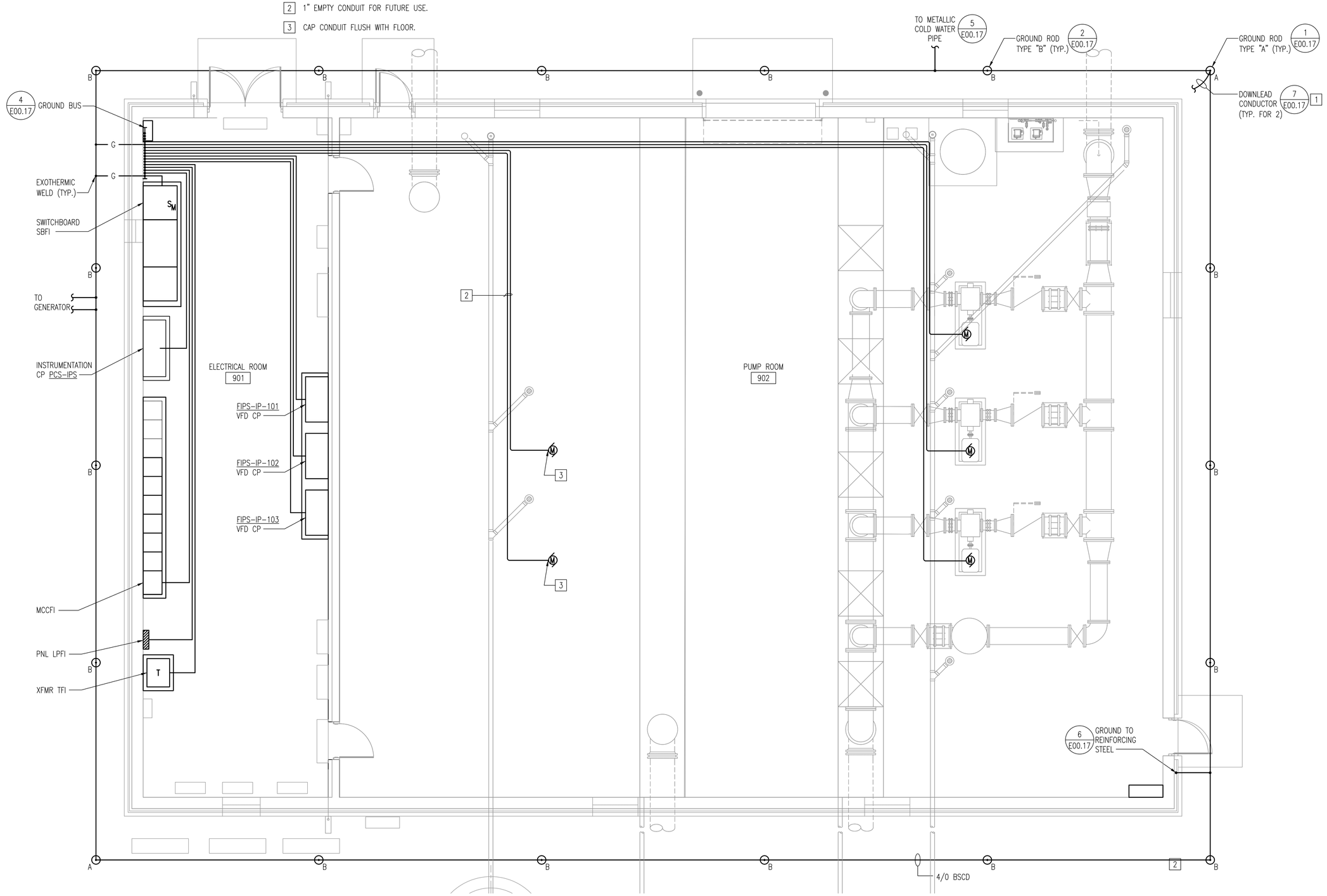

1 E09.01 FILTERED IRRIGATION PUMP STATION GROUNDING PLAN
SCALE: 1/4" = 1'-0"

REVISIONS		

CLIENT INFORMATION

SUSSEX COUNTY, DE
ENGINEERING
DEPARTMENT

INLAND BAYS RWF
PHASE #2 EXPANSION:
CONTRACT S19-10

KEY PLAN

GRAPHIC SCALES

0 2' 4' 8'
SCALE: 1/4" = 1'-0"

SIGNATURE

IL HWAN KIM LICENSE No. 15204 DELAWARE PROFESSIONAL ENGINEER
7-10-19

Whitman, Requardt & Associates, LLP
801 South Caroline Street, Baltimore, Maryland 21231

FILTERED IRRIGATION PUMP STATION
GROUNDING PLAN & DIAGRAM

DRAWING NO.

E09.03

SCALE: AS SHOWN		
DATE: JULY 2019	SHEET 171 OF 229	
DES: JPS	DRAWN: KK	CHECK: IHK

PLOT DATED: 7/12/2019 10:54:40 AM PAGE SETUP: WRA-PDF C36X24) PLOT STYLE: WRA_2006.CTB PAPER SIZE:ARCH FULL BLEED D (36.00 X 24.00 INCHES)

GENERAL SHEET NOTES

1. SEE DRAWING E00.01 FOR ELECTRICAL LEGEND.
2. SEE DRAWING E00.02 FOR GENERAL NOTES AND ABBREVIATIONS.

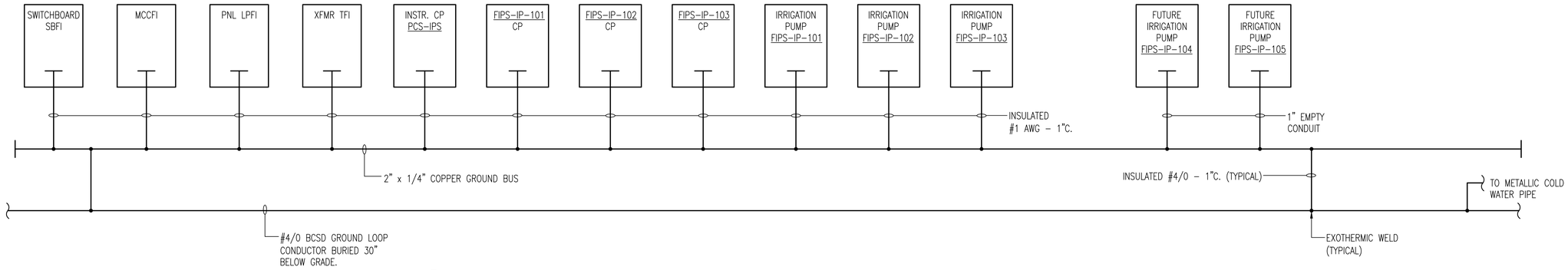

1 / E09.04 FILTERED IRRIGATION PUMP STATION GROUNDING RISER DIAGRAM
SCALE: NONE

REVISIONS

CLIENT INFORMATION

SUSSEX COUNTY, DE
ENGINEERING
DEPARTMENT

INLAND BAYS RWF
PHASE #2 EXPANSION:
CONTRACT S19-10

KEY PLAN

GRAPHIC SCALES

SIGNATURE

IHK
IL HWAN KIM
LICENSE
No. 15204
DELAWARE
PROFESSIONAL ENGINEER
7-10-19

Whitman, Requardt & Associates, LLP
801 South Caroline Street, Baltimore, Maryland 21231

FILTERED IRRIGATION PUMP STATION
GROUNDING RISER DIAGRAM

DRAWING NO.

E09.04

SCALE: NONE		
DATE: JULY 2019	SHEET 172 OF 229	
DES: JPS	DRAWN: KK	CHECK: IHK

PLOT DATED: 7/10/2019 102716 AM PAGE SETUP: WRA-PDF C36X24D PLOT STYLE: WRA_2006.CTB PAPER SIZE:ARCH FULL BLEED D (36.00 X 24.00 INCHES)

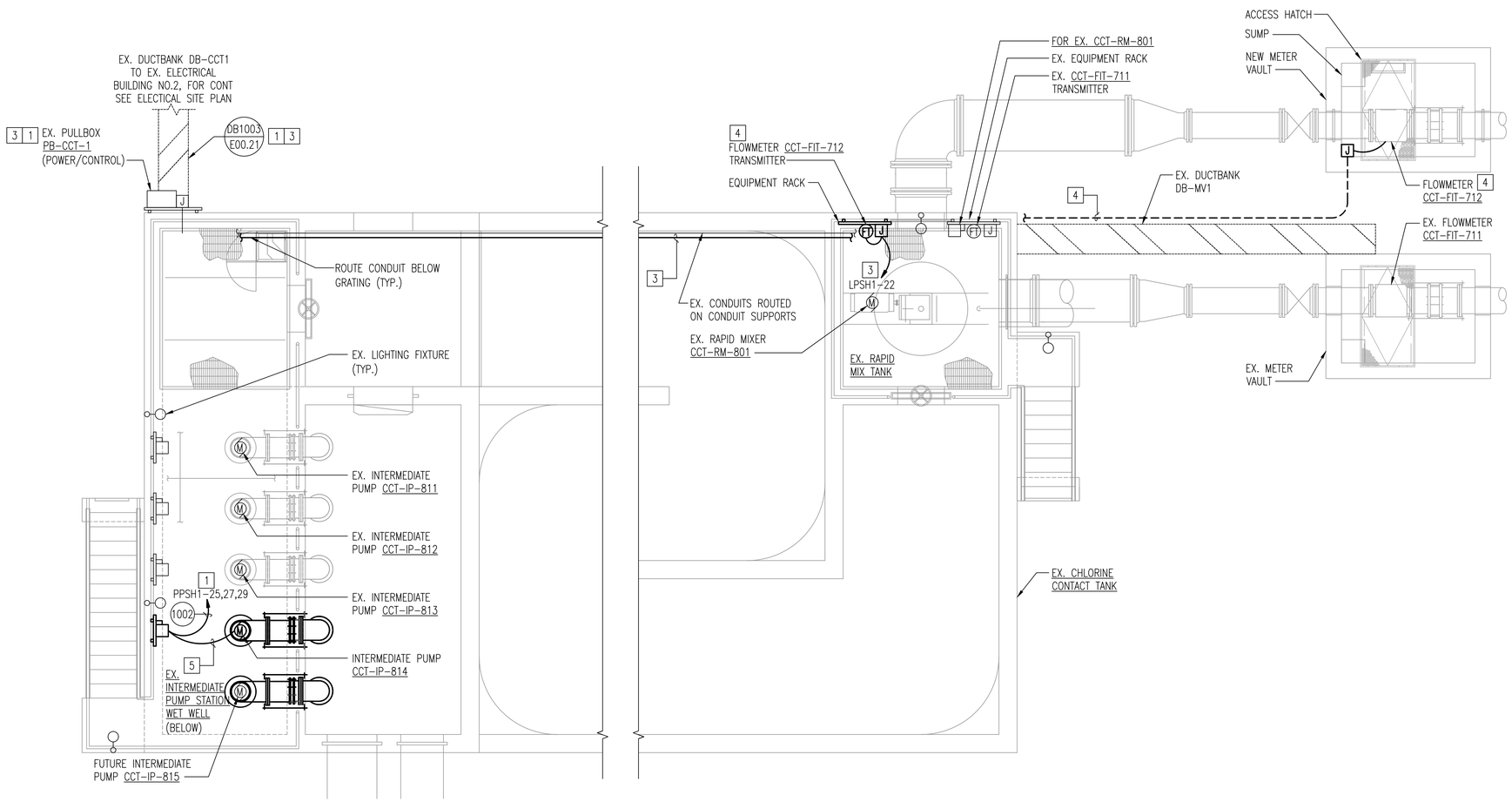

1 E10.01 CHLORINE CONTACT TANK & METER VAULT POWER PLAN

SCALE: 1/4" = 1'-0"

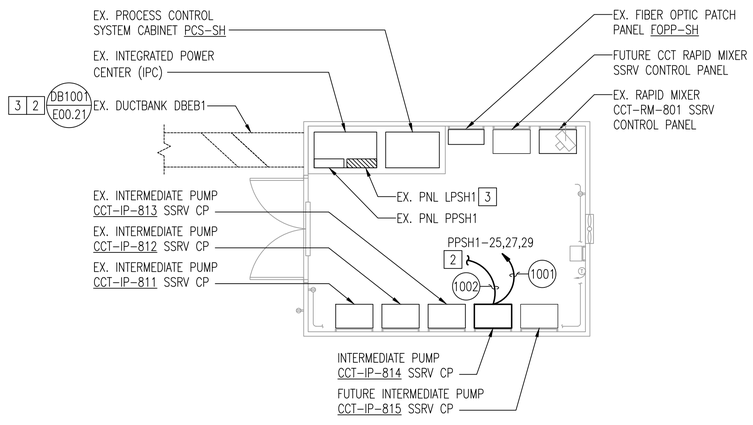

2 E10.01 EXISTING ELECTRICAL BUILDING NO.2 POWER PLAN

SCALE: 1/4" = 1'-0"

GENERAL SHEET NOTES

1. SEE DRAWING E00.01 FOR ELECTRICAL LEGEND.
2. SEE DRAWING E00.02 FOR ELECTRICAL GENERAL NOTES AND ABBREVIATIONS.
3. CHLORINE CONTACT TANK EQUIPMENT POWER IS PROVIDED FROM EXISTING ELECTRICAL BUILDING NO.2. , EXISTING ELECTRICAL BUILDING NO.2 POWER IS PROVIDED FROM EXISTING PUMP AND BLOWER BUILDING NO.1, SEE DRAWING E00.06 FOR EXISTING PUMP AND BLOWER BUILDING NO.1 – PARTIAL ONE LINE DIAGRAMS.
4. SEE DRAWING E00.03 FOR ELECTRICAL SITE PLAN.
5. SEE DRAWING E00.15 FOR PANEL PPSH1 AND LPSH1 SCHEDULES.
6. SEE INSTRUMENTATION DRAWINGS FOR INSTRUMENTATION EQUIPMENT AND CONTROL REQUIREMENTS.
7. THE CHLORINE CONTACT TANK AREA AND CHANNELS SHALL BE DESIGNATED CLASS I, DIV. 2, GROUP D, HAZARDOUS LOCATION. ALL ELECTRICAL WORK IN THE AREA SHALL CONFORM TO NFPA 820.
8. ALL DISCONNECT SWITCH SHALL BE NEMA 4X AND MOUNTED ABOVE HAZARDOUS ZONE.
9. ALL JUNCTION BOXES SHALL BE NEMA 4X.
10. CORE DRILL CONCRETE WALLS ALL REQUIRED FOR THE ROUTING OF THE CONDUITS.

SHEET KEYNOTES

1. ROUTE FEEDER TO INTERMEDIATE PUMP CCT-IP-814 SSRV IN THE EXISTING ELECTRICAL BUILDING NO.2 VIA EXISTING DUCTBANKS AND PULLBOXES. REFER TO ELECTRICAL SITE PLAN FOR CONTINUATION.
2. ROUTE FEEDER TO INTERMEDIATE PUMP CCT-IP-814 AT THE EXISTING CONTACT TANK VIA EXISTING DUCTBANKS AND PULLBOXES. REFER TO ELECTRICAL SITE PLAN FOR CONTINUATION.
3. ROUTE BRANCH CIRCUIT TO EXISTING PANEL LPSH1 IN THE EXISTING ELECTRICAL BUILDING NO.2 VIA NEW CONDUIT ROUTED WITH EXISTING CONDUITS THAT ARE BELOW THE GRATING, EXISTING DUCTBANKS, AND PULLBOXES. REFER TO ELECTRICAL SITE PLAN FOR CONTINUATION. PROVIDE (1)-3/4" CONDUIT FOR CONTROLS, SEE INSTRUMENTATION DRAWINGS FOR WIRING REQUIREMENTS. NEW CONDUITS TO USE EXISTING CONDUIT SUPPORTS. MODIFY CONDUITS SUPPORT AS REQUIRED TO PROVIDE SUPPORT.
4. PROVIDE (1)-1" CONDUIT FROM FLOWMETER CCT-FIT-712 TO TRANSMITTER. DIRECT BURY CONDUIT FROM CHLORINE CONTACT TANK TO FLOW METER VAULT. SEE INSTRUMENTATION DRAWINGS FOR WIRING REQUIREMENTS.
5. ROUTE FEEDER CONDUCTORS IN EXISTING STUB-UP CONDUIT FROM DISCONNECT SWITCH TO MOTOR. PROVIDE ADDITIONAL CONDUIT AS REQUIRED.

REVISIONS		

CLIENT INFORMATION

SUSSEX COUNTY, DE
ENGINEERING
DEPARTMENT

INLAND BAYS RWF
PHASE #2 EXPANSION:
CONTRACT S19-10

KEY PLAN

GRAPHIC SCALES

0 2' 4' 8'

SCALE: 1/4" = 1'-0"

SIGNATURE

IL HWAN KIM
LICENSE
No. 19294
DELAWARE
PROFESSIONAL ENGINEER
12-14-18

Whitman, Requardt & Associates, LLP
801 South Caroline Street, Baltimore, Maryland 21231

ELECTRICAL BUILDING NO.2,
CHLORINE CONTACT TANK &
METERING VAULT POWER PLANS

DRAWING NO.

E10.01

SCALE: AS SHOWN		
DATE: DEC. 2018	SHEET 173 OF 217	
DES: JPS	DRAWN: SMC	CHECK: IHK

PLOT DATE: 12/14/2018 3:01:13 PM PAGE SETUP: WRA-PDF (36X24) PLOT STYLE: WRA_2006.CTB PAPER SIZE:ARCH FULL BLEED D (36.00 X 24.00 INCHES)

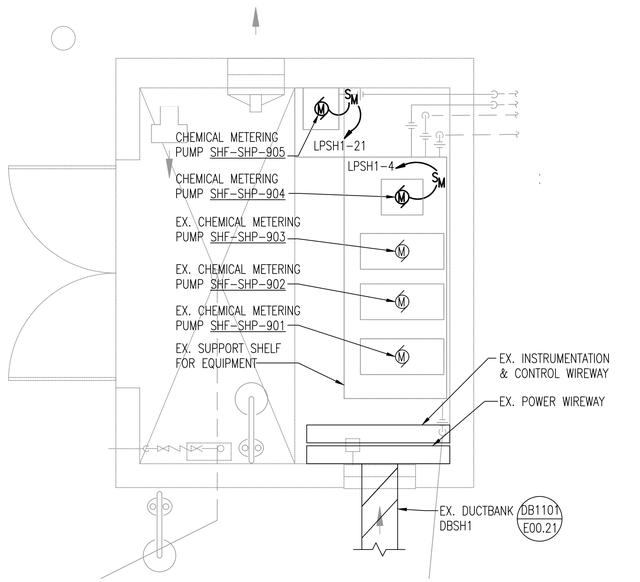

1 / E11.01 EXISTING CHEMICAL BUILDING POWER PLAN

SCALE: 1/2" = 1'-0"

GENERAL SHEET NOTES

1. SEE DRAWING E00.01 FOR ELECTRICAL LEGEND.
2. SEE DRAWING E00.02 FOR ELECTRICAL GENERAL NOTES AND ABBREVIATIONS.
3. CHEMICAL BUILDING EQUIPMENT POWER IS PROVIDED FROM EXISTING ELECTRICAL BUILDING NO.2, SEE DRAWING E10.01 PLAN.
4. SEE DRAWING E00.03 FOR ELECTRICAL SITE PLAN.
5. SEE DRAWING E00.15 FOR PANEL SCHEDULES.
6. SEE INSTRUMENTATION DRAWINGS FOR INSTRUMENTATION EQUIPMENT AND CONTROL REQUIREMENTS.
7. PANEL LPSH1 BRANCH CIRCUITS ARE ROUTED TO EXISTING ELECTRICAL BUILDING NO.2 VIA EXISTING POWER/CONTROL WIREWAY AND EXISTING DUCTBANK. SEE DRAWING E10.01 FOR PANEL LPSH1 IN EXISTING ELECTRICAL BUILDING NO.2.

REVISIONS

CLIENT INFORMATION

SUSSEX COUNTY, DE
ENGINEERING
DEPARTMENT

INLAND BAYS RWF
PHASE #2 EXPANSION:
CONTRACT S19-10

KEY PLAN

GRAPHIC SCALES

0 1' 2' 4'

SCALE: 1/2" = 1'-0"

SIGNATURE

IL HWAN KIM
LICENSE
No. 19294
DELAWARE
PROFESSIONAL ENGINEER
12-14-18

Whitman, Requardt & Associates, LLP
801 South Caroline Street, Baltimore, Maryland 21231

EXISTING
CHEMICAL BUILDING POWER PLAN

DRAWING NO.

E11.01

SCALE: AS SHOWN		
DATE: DEC. 2018	SHEET 174 OF 217	
DES: JPS	DRAWN: SMC	CHECK: IHK

PLOT DATE: 12/14/2018 3:01:17 PM PAGE SETUP: WRA-PDF C36(24) PLOT STYLE: WRA_2006.CTB PAPER SIZE:ARCH FULL BLEED D (36.00 X 24.00 INCHES)

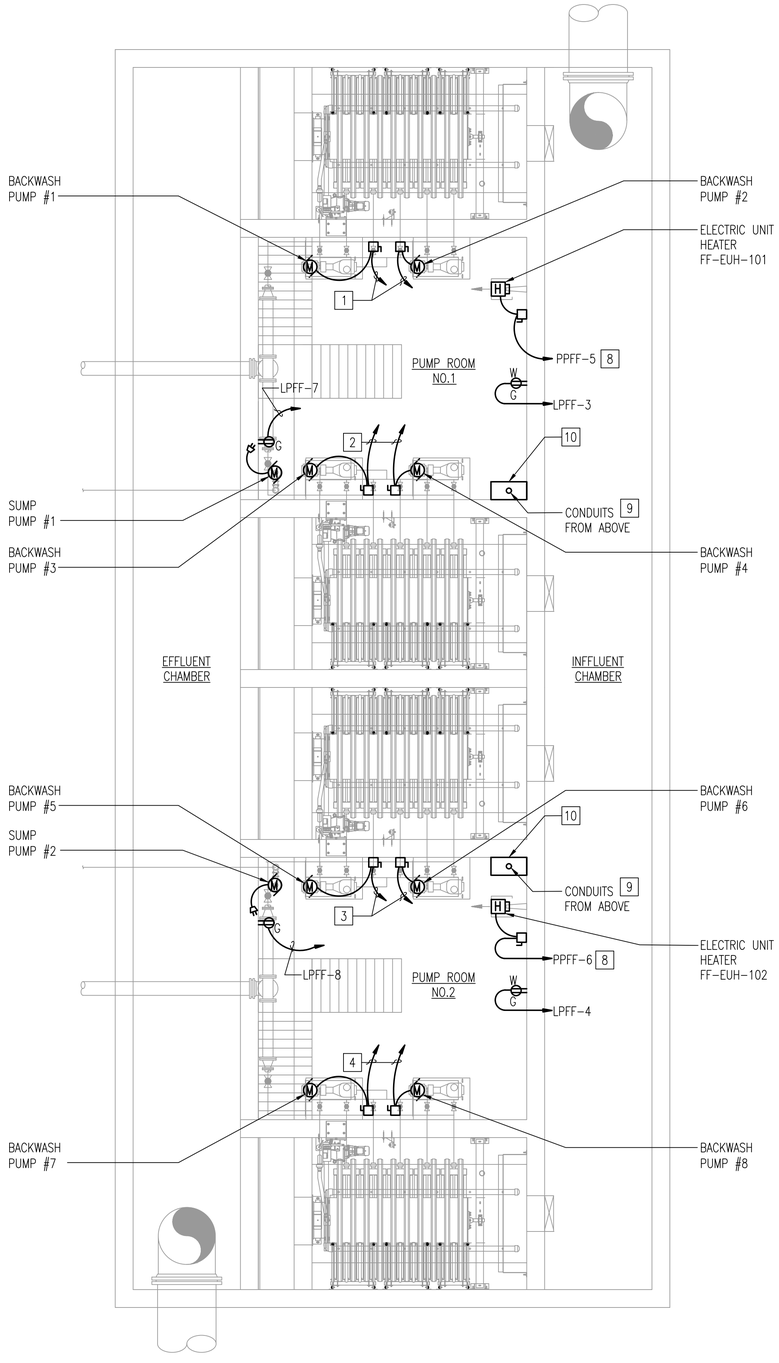

1 E12.01 FILTRATION FACILITY LOWER POWER PLAN
SCALE: 1/4" = 1'-0"

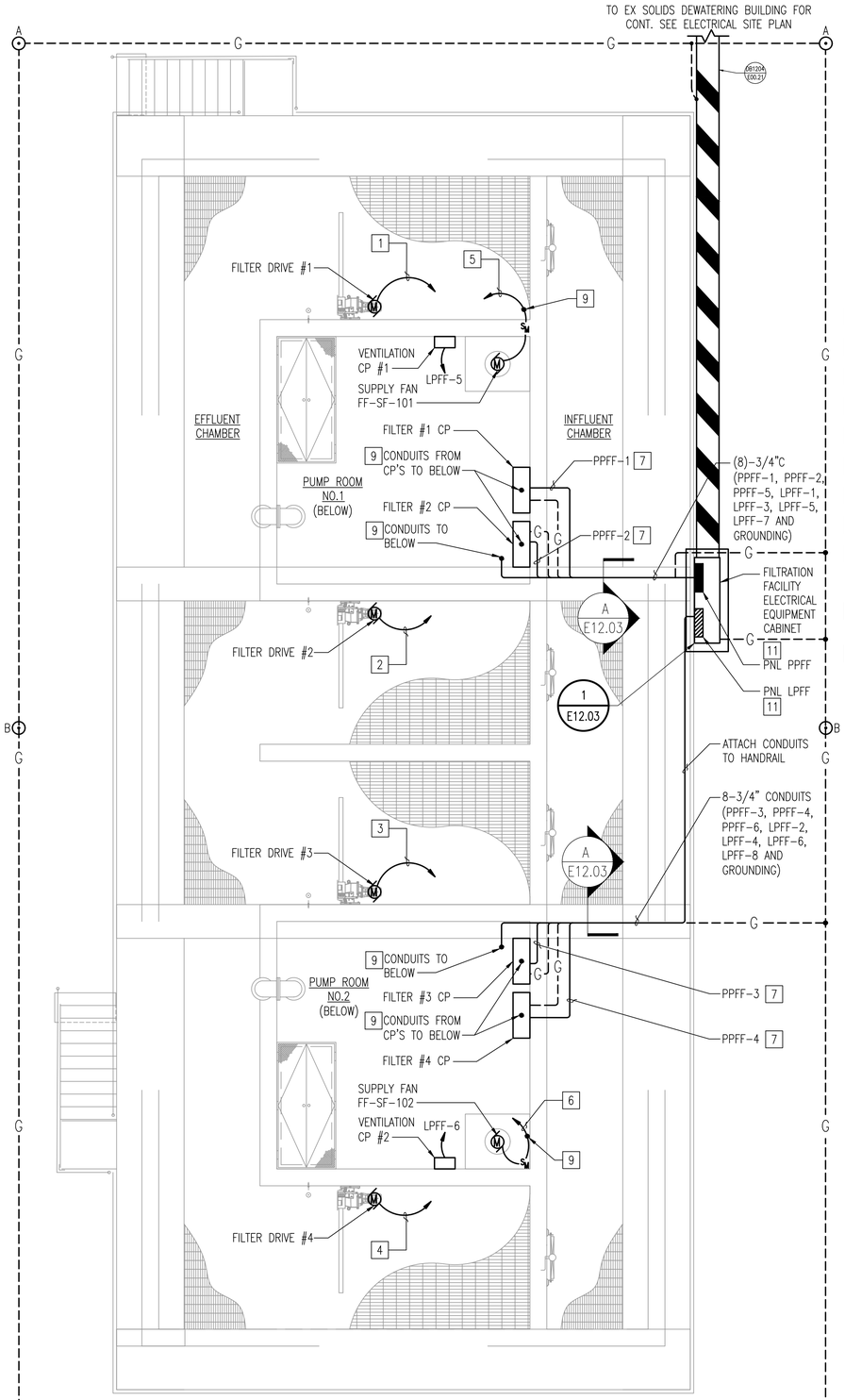

2 E12.01 FILTRATION FACILITY UPPER POWER PLAN
SCALE: 1/4" = 1'-0"

GENERAL SHEET NOTES

1. SEE DRAWING E00.01 FOR ELECTRICAL LEGEND.
2. SEE DRAWING E00.02 FOR ELECTRICAL GENERAL NOTES AND ABBREVIATIONS.
3. SEE DRAWING E00.03 FOR ELECTRICAL SITE PLAN.
4. SEE DRAWING E00.15 FOR PANEL SCHEDULES.
5. SEE INSTRUMENTATION DRAWINGS FOR INSTRUMENTATION EQUIPMENT AND CONTROL REQUIREMENTS.
6. ALL DISCONNECT SWITCHES SHALL BE NEMA 4X.

SHEET KEY NOTES

1. 3#12, 1#12G IN 3/4"C. TO FILTER #1 CONTROL PANEL.
2. 3#12, 1#12G IN 3/4"C. TO FILTER #2 CONTROL PANEL.
3. 3#12, 1#12G IN 3/4"C. TO FILTER #3 CONTROL PANEL.
4. 3#12, 1#12G IN 3/4"C. TO FILTER #4 CONTROL PANEL.
5. TO VENTILATION CONTROL PANEL #1.
6. TO VENTILATION CONTROL PANEL #2.
7. 3#10, 1#10G IN 3/4"C.
8. 3#12, 1#12G IN 3/4"C.
9. CONDUIT SLEEVES THROUGH CONCRETE PROVIDED BY TANK MANUFACTURER. COORDINATE SIZE, NUMBER AND LOCATION OF SLEEVES WITH TANK MANUFACTURER.
10. NEMA 4 PULL BOX – MINIMUM 24" X 12" WITH CONTINUOUS HINGE AND CLAMPS.
11. PANEL LOCATED INSIDE FILTRATION FACILITY ELECTRICAL EQUIPMENT CABINET.

REVISIONS

CLIENT INFORMATION

SUSSEX COUNTY, DE
ENGINEERING DEPARTMENT

INLAND BAYS RWF
PHASE #2 EXPANSION:
CONTRACT S19-10

KEY PLAN

GRAPHIC SCALES

0 2' 4' 8'
SCALE: 1/4" = 1'-0"

SIGNATURE

IL HWAN KIM
LICENSE
No. 15204
DELAWARE
PROFESSIONAL ENGINEER
7-10-19

Whitman, Requardt & Associates, LLP
801 South Caroline Street, Baltimore, Maryland 21231

FILTRATION FACILITY
POWER PLANS

DRAWING NO.

E12.01

SCALE: AS SHOWN		
DATE: JULY 2019	SHEET XYZ OF 229	
DES: MH	DRAWN: MH	CHECK: RHM

PLOT DATE: 7/10/2019 8:52:42 PM PAGE SETUP> VRA-PDF (36X24) PLOT STYLE: VRA_2006.CTB PAPER SIZE:ARCH FULL BLEED D (36.00 X 24.00 INCHES)
N:\1405-0020.CAD\Plans\Phase2\E12.01.dwg
PLOTTED BY: Mark Hall

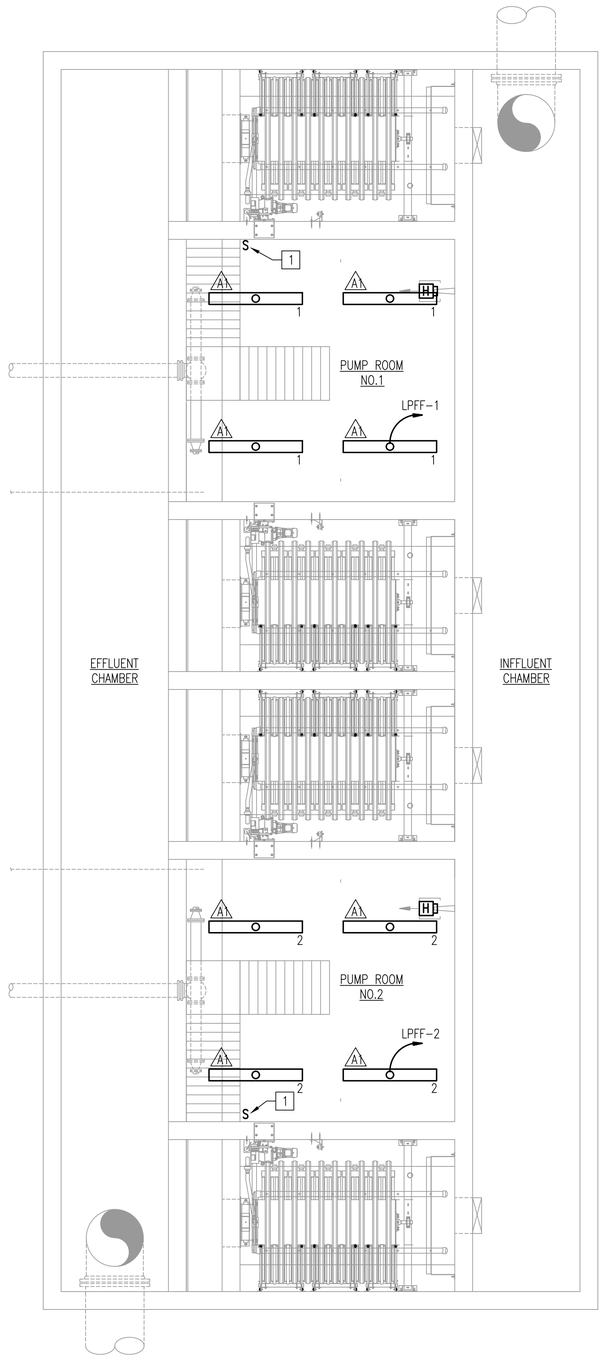

1 E12.01 FILTRATION FACILITY LOWER LIGHTING PLAN
SCALE: 1/4" = 1'-0"

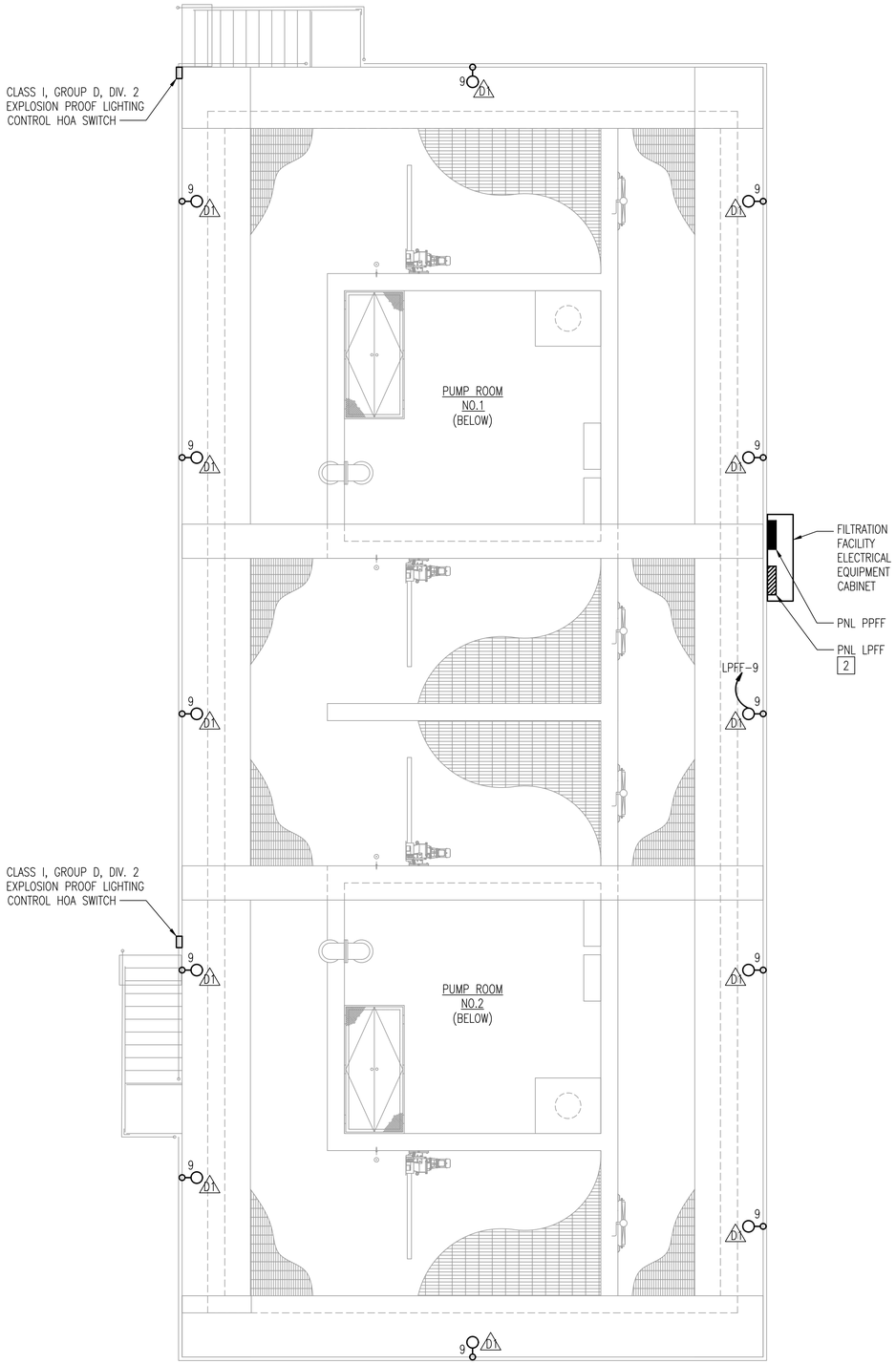

2 M12.01 FILTRATION FACILITY UPPER POWER LIGHTING PLAN
SCALE: 1/4" = 1'-0"

GENERAL SHEET NOTES

1. SEE DRAWING E00.01 FOR ELECTRICAL LEGEND.
2. SEE DRAWING E00.02 FOR ELECTRICAL GENERAL NOTES AND ABBREVIATIONS.
4. SEE DRAWING E00.15 FOR PANEL SCHEDULES.
5. SEE DRAWING E00.12 FOR LIGHTING FIXTURE SCHEDULE.
6. SEE INSTRUMENTATION DRAWINGS FOR INSTRUMENTATION EQUIPMENT AND CONTROL REQUIREMENTS.

SHEET KEY NOTES

1. PROVIDE LIGHT SWITCH NEXT TO ACCESS HATCH AND 12" BELOW TOP SLAB OF PUMP ROOM.
2. PANEL LOCATED INSIDE FILTRATION FACILITY ELECTRICAL EQUIPMENT CABINET.

REVISIONS

CLIENT INFORMATION

SUSSEX COUNTY, DE
ENGINEERING
DEPARTMENT

INLAND BAYS RWF
PHASE #2 EXPANSION:
CONTRACT S19-10

KEY PLAN

GRAPHIC SCALES

0 2' 4' 8'
SCALE: 1/4" = 1'-0"

SIGNATURE

IL HWAN KIM
LICENSE
No. 19294
DELAWARE
PROFESSIONAL ENGINEER
7-10-19

Whitman, Requardt & Associates, LLP
801 South Caroline Street, Baltimore, Maryland 21231

FILTRATION FACILITY
POWER PLANS

DRAWING NO.

E12.02

SCALE: AS SHOWN		
DATE: JULY 2019	SHEET XYZ OF 229	
DES: MH	DRAWN: MH	CHECK: RHM

PLOT DATE: 7/10/2019 2:52:50 PM PAGE SETUP: WRA-PDF (36X24) PLOT STYLE: WRA_2006.CTB PAPER SIZE:ARCH FULL BLEED D (36.00 X 24.00 INCHES)

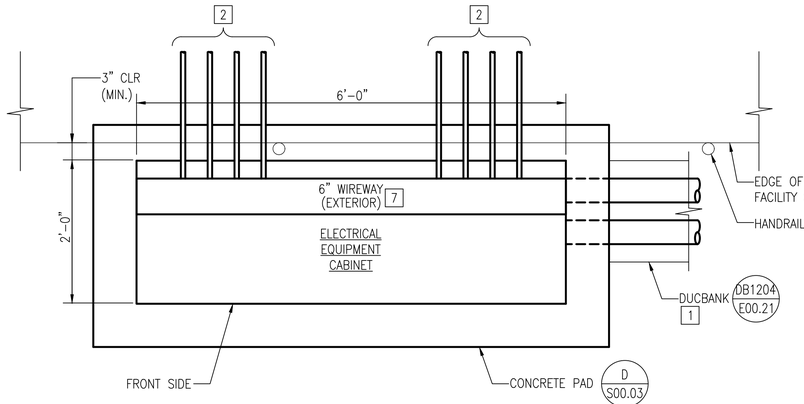

FILTRATION FACILITY ELECTRICAL EQUIPMENT CABINET - PLAN

1 / E12.03 NOT TO SCALE

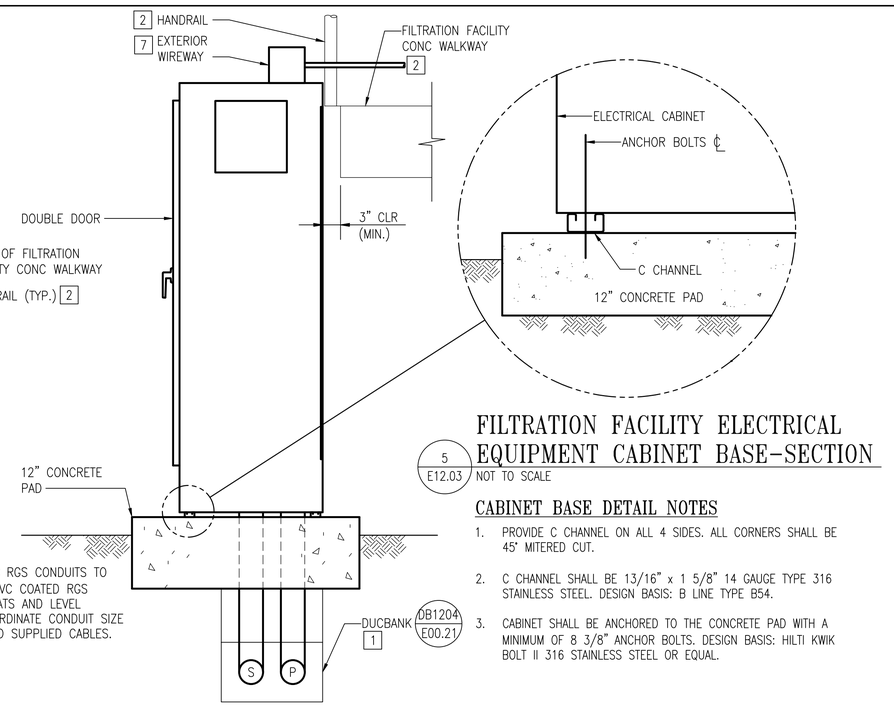

FILTRATION FACILITY ELECTRICAL EQUIPMENT CABINET - SIDE VIEW

3 / E12.03 NOT TO SCALE

FILTRATION FACILITY ELECTRICAL EQUIPMENT CABINET BASE-SECTION

5 / E12.03 NOT TO SCALE

CABINET BASE DETAIL NOTES

1. PROVIDE C CHANNEL ON ALL 4 SIDES. ALL CORNERS SHALL BE 45° MITERED CUT.
2. C CHANNEL SHALL BE 13/16" x 1 5/8" 14 GAUGE TYPE 316 STAINLESS STEEL. DESIGN BASIS: B LINE TYPE B54.
3. CABINET SHALL BE ANCHORED TO THE CONCRETE PAD WITH A MINIMUM OF 8 3/8" ANCHOR BOLTS. DESIGN BASIS: HILTI KWIK BOLT II 316 STAINLESS STEEL OR EQUAL.

GENERAL SHEET NOTES

1. SEE DRAWING E00.01 FOR ELECTRICAL LEGEND.
2. SEE DRAWING E00.02 FOR GENERAL NOTES AND ABBREVIATIONS.
3. SEE DRAWING E00.15 FOR PANEL SCHEDULES.
4. PROVIDE PULL STRING WITH ALL SPARE CONDUITS.

SHEET KEY NOTES

1. SEE SITE PLAN ON DRAWING E00.03A FOR CONTINUATION.
2. SEE FILTRATION FACILITY PLANS ON DRAWINGS E12.01 AND E12.02 FOR BRANCH CIRCUIT REQUIREMENTS FROM PANELS PPFF AND LPFF. COORDINATE ROUTING OF BRANCH CIRCUITS WITH HANDRAIL.
3. PROVIDE POWER DISTRIBUTION BLOCKS WITH COVER, SQUARE D, CLASS 9080 SUITABLE FOR COPPER CONDUCTORS.
4. 125V, 20A GFCI RECEPTACLE AND CABINET LIGHT SWITCH.
5. SURFACE MOUNTED LED LIGHT FIXTURE, 3000 LUMENS, 4000K, 29 WATTS, HIGH EFFICIENCY DRIVER, WITH LINEAR FACETED REFLECTOR CAVITY, 120 VOLTS, 1' X 4' LONG WITH 700 LUMENS BATTERY PACK. LITHONIA RTLX OR APPROVED EQUAL.
6. TERMINATE AND CAP SPARE CONDUIT IN EQUIPMENT CABINET.
7. NEMA 4X, 6" x 6" x72" 316 STAINLESS STEEL OR EQUAL.

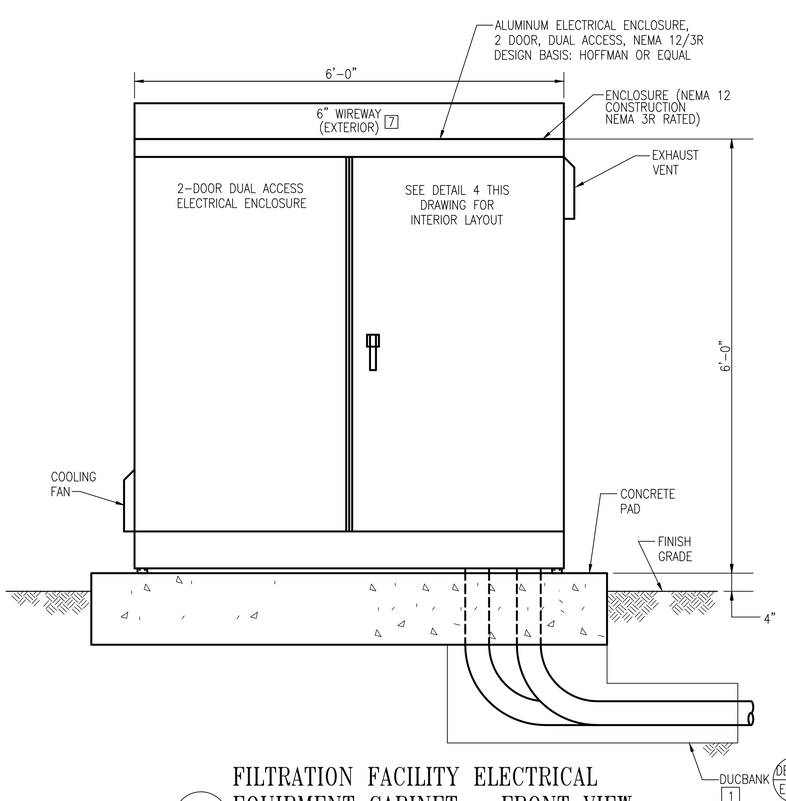

FILTRATION FACILITY ELECTRICAL EQUIPMENT CABINET - FRONT VIEW

2 / E12.03 NOT TO SCALE

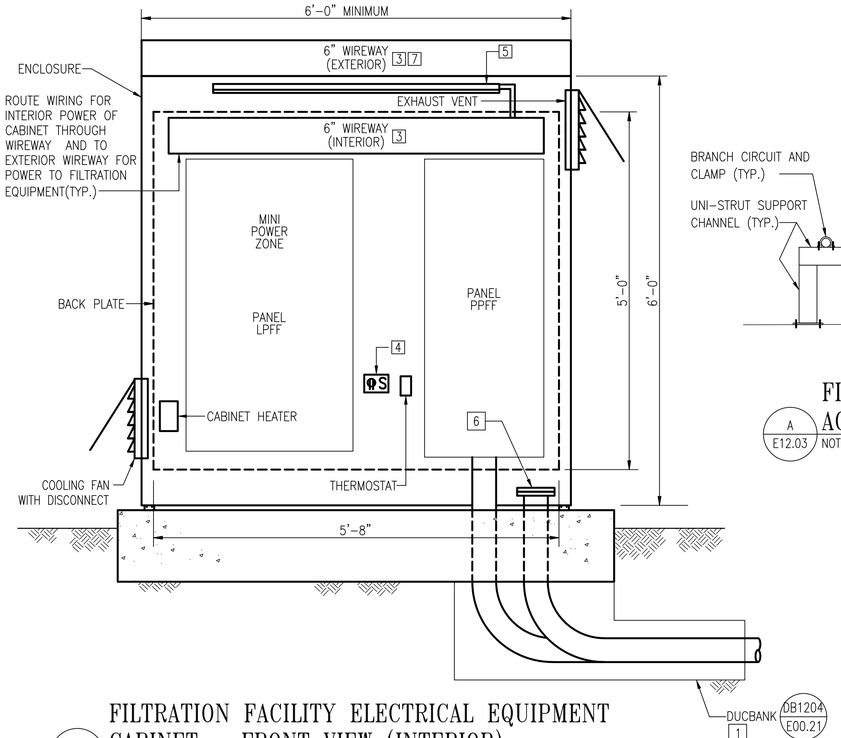

FILTRATION FACILITY ELECTRICAL EQUIPMENT CABINET - FRONT VIEW (INTERIOR)

4 / E12.03 NOT TO SCALE

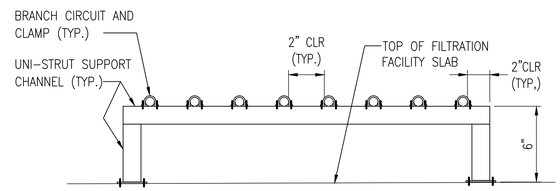

FILTRATION FACILITY CONDUIT ACROSS TOP SLAB SUPPORT DETAIL

A / E12.03 NOT TO SCALE

REVISIONS		

CLIENT INFORMATION

SUSSEX COUNTY, DE
ENGINEERING DEPARTMENT

INLAND BAYS RWF PHASE #2 EXPANSION: CONTRACT S19-10

KEY PLAN

GRAPHIC SCALES

SIGNATURE

IL HWAN KIM LICENSE No. 15204 DELAWARE PROFESSIONAL ENGINEER
7-10-19

Whitman, Requardt & Associates, LLP
801 South Caroline Street, Baltimore, Maryland 21231

FILTRATION FACILITY DETAILS

DRAWING NO.

E12.03

SCALE: AS SHOWN		
DATE: JULY 2019		SHEET XYZ OF 217
DES: JPS	DRAWN: SMC	CHECK: IK

PLOT DATE: 7/10/2019 2:52:51 PM PAGE SETUP: WRA-PDF (36X24) PLOT STYLE: WRA_2006.CTB PAPER SIZE:ARCH FULL BLEED D (36.00 X 24.00 INCHES)

GENERAL NOTES

1. SEE ELECTRICAL DRAWINGS FOR POWER DISTRIBUTION, DISCONNECT REQUIREMENTS, EQUIPMENT LOCATIONS AND FEEDER REQUIREMENTS.

2. MOTOR STARTER ELEMENTARIES SHOWN ARE INTENDED TO DEPICT THE GENERAL CONTROLS REQUIREMENT FOR THAT PARTICULAR PIECE OF EQUIPMENT AND DO NOT NECESSARILY INDICATE ALL THE REQUIREMENTS OF THE MOTOR STARTER.

3. SEE ELECTRICAL DRAWINGS AND SPECIFICATIONS FOR SPECIFIC MOTOR STARTER REQUIREMENTS. SEE MECHANICAL AND ELECTRICAL DRAWINGS FOR EQUIPMENT LOCATIONS AND POWER REQUIREMENTS. CONTRACTOR SHALL COORDINATE EQUIPMENT LOCATIONS SUCH AS NOT TO CAUSE INTERFERENCE WITH NEW AND/OR EXISTING EQUIPMENT.

4. ENCLOSURE DIMENSIONS SHOWN ARE MINIMUM REQUIREMENTS. ENCLOSURES SHALL BE SIZED TO ACCOMMODATE EQUIPMENT, CONTROLS AND COMPONENTS AS SHOWN, SPECIFIED AND REQUIRED FOR AN OPERABLE SYSTEM.

5. CIRCUITS SHOWN SHALL BE INSTALLED INSTALLED IN CONDUIT SIZES AS INDICATED IN THE GENERAL CIRCUIT/CONDUIT TAG IDENTIFICATION SCHEDULE.

6. ALL PENETRATIONS THROUGH EXISTING SOLID CONCRETE STRUCTURES WHERE SLEEVES HAVE NOT BEEN PROVIDED SHALL BE CORE DRILLED AND SIZED TO ACCEPT MECHANICAL LINK SEALS. THROUGH NON-FIRE RATED WALLS, CORE HOLES AND SEAL AROUND CONDUIT WITH NON-SHRINK GROUT. THROUGH EXTERIOR WALL, SEAL WATERTIGHT WITH SILICONE MASONRY SEALANT.

7. ALL DISCRETE OUTPUTS SHALL BE PROVIDED WITH INTERPOSING RELAYS.

8. CONDUIT RUNS ARE SHOWN DIAGRAMMATICALLY ONLY AND SHALL BE INSTALLED IN A MANNER TO PREVENT CONFLICTS WITH EQUIPMENT AND STRUCTURAL CONDITIONS. EXPOSED CONDUITS ABOVE SUSPENDED CEILINGS AND FURRED WALLS SHALL BE INSTALLED PARALLEL TO THE BEAMS AND WALLS.

9. PROVIDE ALL REQUIRED PULL BOXES AND JUNCTION BOXES FOR INSTALLATION FOR INSTALLATION OF THE WIRING IN ACCORDANCE WITH CONTRACT SPECIFICATIONS THOUGH THE BOXES MAY NOT BE INDICATED ON THE DRAWINGS.

10. ALL INDICATION AND CONTROL WIRING IN JUNCTION BOXES SHALL BE WIRED TO NUMBERED TERMINAL STRIPS AND IDENTIFIED AS TO START AND END OF RUN.

11. IN CONTROL PANELS, PROVIDE PERMANENT LABEL AT EACH CIRCUIT BREAKER AND FUSE WITH CIRCUIT, AMP RATING, AND/OR EQUIPMENT BEING FED.

12. AREAS DESIGNATED AS HAZARDOUS LOCATIONS ARE SPECIFIED AND/OR SHOWN ON THE CONTRACT DRAWINGS. WORK INSTALLED IN AREAS DESIGNATED AS CLASS I, GROUP D, DIVISION 1 OR CLASS I, GROUP D, DIVISION 2 HAZARDOUS LOCATIONS SHALL BE INSTALLED IN ACCORDANCE WITH THE REQUIREMENTS OF ARTICLE 500 OF THE NATIONAL ELECTRIC CODE. THE LIMITS FOR CLASS I, GROUP D, DIVISION 1 HAZARDOUS LOCATIONS SHALL EXTEND BEYOND THE ENCLOSED AREA FOR A 3' ENVELOPE OUTSIDE EXTERIOR DOORS, ACCESS HATCHES, AND OTHER OPENINGS. THE LIMITS FOR DIVISION 2 HAZARDOUS LOCATIONS FOR OUTDOOR TANKS AND BASINS SHALL EXTEND 18" ABOVE THE MAXIMUM WATER SURFACE ELEVATION AND ABOVE TANK WALLS AND SHALL INCLUDE AN 18" HIGH ENVELOPE AROUND A 10' PERIMETER OF THE TANK OR BASIN.

13. CABLE AND CONDUCTOR REQUIREMENTS VARY BETWEEN DIFFERENT MANUFACTURERS OF EQUIPMENT AND INSTRUMENTATION. CONTRACTOR SHALL VERIFY MANUFACTURERS REQUIREMENTS AND MUST PROVIDE THE CABLE AND CONDUIT SIZED AS REQUIRED.

14. EXISTING EQUIPMENT AND WIRE IS SHOWN IN A LIGHT GRAY SCALE, NEW EQUIPMENT AND WIRING IS SHOWN BOLD.

15. ALL WIRING SHALL CONFORM TO THE FOLLOWING:

1	LINE AND LOAD CIRCUITS (AC OR DC POWER)	BLACK
2	NEUTRAL/GROUND CONDUCTORS	WHITE
3	AC CONTROL CIRCUITS	RED
4	DC CONTROL CIRCUITS (+)	BLUE
5	DC CONTROL CIRCUITS (-)	BLUE/BLACK
6	INTERLOCK CONTROL CIRCUITS ON THE PANEL ENERGIZED FROM EXTERNAL SOURCE	YELLOW
7	EQUIPMENT GROUNDING CONDUCTORS	GREEN

ABBREVIATIONS

A/C	=	AIR CONDITIONING
AI	=	ANALOG INPUT
AMP	=	AMPERE
AO	=	ANALOG OUTPUT
AUTO	=	AUTOMATIC
AUX	=	AUXILIARY
ATS	=	AUTOMATIC TRANSFER SWITCH
BMS	=	BUILDING MANAGEMENT SYSTEM
BOU	=	BUREAU OF UTILITIES
BP	=	BOOSTER PUMP
CIM	=	COMMUNICATION INTERFACE MODULE
COMM	=	COMMUNICATION
CP	=	CONTROL PANEL
CPT	=	CONTROL POWER TRANSFORMER
CR	=	CONTROL RELAY
C/S/O	=	CLOSE/STOP/OPEN
DI	=	DISCRETE INPUT
DO	=	DISCRETE OUTPUT
DP	=	DIFFERENTIAL PRESSURE
DPDT	=	DOUBLE POLE-DOUBLE THROW
DV	=	DISCHARGE VALVE
EF	=	EXHAUST FAN
E-NET	=	ETHERNET
E-STOP	=	EMERGENCY STOP
ETM	=	ELAPSE TIME METER
ETR	=	EXISTING TO REMAIN
EX	=	EXISTING
F/B	=	FEEDBACK
F/C	=	FIBER/COPPER
FM	=	FLOW METER
FO	=	FIBER OPTIC
FPP	=	FIBER OPTIC PATCH PANEL
F-STAT	=	FREEZE-STAT
GFI	=	GROUND FAULT INTERRUPTER
GND	=	GROUND
HMI	=	HUMAN MACHINE INTERFACE
HOA	=	HAND-OFF-AUTO
HX	=	HEAT EXCHANGER
I/O	=	INPUT/OUTPUT
ISB	=	INTRINSICALLY SAFE BARRIER
ISR	=	INTRINSICALLY SAFE RELAY
J-BOX	=	JUNCTION BOX
L	=	LINE
LEL	=	LOWER EXPLOSIVE LIMIT
LLS	=	LEAD-LAG-STANDBY
LOR	=	LOCK OUT RELAY
L/R	=	LOCAL/REMOTE
LS	=	LIMIT SWITCH
MAX	=	MAXIMUM
MCC	=	MOTOR CONTROL CENTER
MFR	=	MANUFACTURER
MIN	=	MINIMUM
MMS	=	MANUAL MOTOR STARTER
MPR	=	MOTOR PROTECTION RELAY
MOD	=	MOTOR OPERATED DAMPER
MOV	=	MOTOR OPERATED VALVE
MTS	=	MOTOR TEMPERATURE SWITCH
MLS	=	MOTOR LEAK SWITCH
N	=	NEUTRAL
NC	=	NORMALLY CLOSED
NEMA	=	NATIONAL ELECTRIC MANUFACTURERS ASSOCIATION
NO	=	NORMALLY OPEN
NTS	=	NOT TO SCALE
OIT	=	OPERATOR INTERFACE TERMINAL
OL	=	OVERLOAD
PC	=	PERSONAL COMPUTER
PCP	=	PUMP CONTROL PANEL
PCS	=	PLANT CONTROL SYSTEM
PIO	=	POINT I/O
PLC	=	PROGRAMMABLE LOGIC CONTROLLER
PS	=	POWER SUPPLY
PSCP	=	PUMP STATION CONTROL PANEL
PSI	=	POUNDS PER SQUARE INCH
PVCC	=	PVC COATED
QTY	=	QUANTITY
RAS	=	RETURN ACTIVATED SLUDGE
RCT	=	REPEAT CYCLE TIMER
RGS	=	RIGID GALVANIZED STEEL
RIO	=	REMOTE I/O
RL	=	RADAR LEVEL
RSP	=	RAW SEWAGE PUMP
RSSP	=	RETURN SECONDARY SLUDGE PUMP
RTD	=	RESISTANCE TEMPERATURE DEVICE
RTU	=	REMOTE TELEMETRY UNIT
RVSS	=	REDUCED VOLTAGE SOFT STARTER
SCS	=	SCREENED SEWAGE
SCADA	=	SUPERVISORY CONTROL AND DATA ACQUISTION
SF	=	SUPPLY FAN
SPD	=	SURGE PROTECTIVE DEVICE
S.S.	=	STAINLESS STEEL
SV	=	SUCTION VALVE
TEMP	=	TEMPERATURE
TR	=	TIMING RELAY
TSP	=	TWISTED SHIELDED PAIR
TST	=	TWISTED SHIELDED TRIAD
T-STAT	=	THERMOSTAT
TVSS	=	TRANSIENT VOLTAGE SURGE SUPPRESSOR
TYP	=	TYPICAL
UL	=	ULTRASONIC LEVEL
UON	=	UNLESS OTHERWISE NOTED
UPS	=	UNINTERRUPTIBLE POWER SUPPLY
VAC	=	VOLTS/ALTERNATING CURRENT
VCP	=	VENTILATION CONTROL PANEL
VDC	=	VOLTS/DIRECT CURRENT
VFD	=	VARIABLE FREQUENCY DRIVE

TAG/EQUIPMENT IDENTIFICATION

THE TAG NAME WILL BE COMPRISED OF A 3 DIGIT TAG THAT IDENTIFIES THE PROCESS AREA OF THE POINT. THIS WILL BE FOLLOWED BY A 7 DIGIT LOOP IDENTIFIER WHICH WILL BE UNIQUE FOR EACH SPECIFIC DEVICE

PROCESS LOCATION IDENTIFIER

THE LOOP IDENTIFIER WILL BEGIN WITH THREE NUMBERS TO INDICATE THE PROCESS OR AREA OF THE PLANT REFERENCED. EACH PROCESS AREA WILL BE ASSIGNED A UNIQUE THREE NUMBER IDENTIFIER. THIS IDENTIFIER WILL TYPICALLY GIVE REFERENCE TO THAT SPECIFIC AREA. THESE DESIGNATIONS WILL SHOW UP AS THE OFFICIAL TAG NAME IN THE I/O LISTING, BUT THEY ARE NOT INTENDED TO BE SHOWN ON P&IDS.

NHW	NORTH HEADWORKS BUILDING
GF	GRIT REMOVAL FACILITY
AL	AERATION LAGOONS
SC	SECONDARY CLARIFIERS NO. 3 AND 4
PBB	EXISTING PUMP AND BLOWER BUILDING
PBB2	PUMP AND BLOWER BUILDING NO. 2
FIPS	FILTERED IRRIGATION PUMP STATION
ADB	AERATION DISTRIBUTION BOX
SPS2	SUMP PUMP STATION NO. 2

EQUIPMENT TAG

THE 3 LETTER EQUIPMENT TAG WILL BE DEVELOPED FROM THE LETTERS REPRESENTING THE DIFFERENT FUNCTIONS IN THE INSTRUMENTATION IDENTIFICATION SCHEDULE.

LOOP NUMBER IDENTIFICATION SCHEDULE

1. THE FIRST DIGIT WILL EQUATE TO THE TYPE OF EQUIPMENT. EACH TYPE OF EQUIPMENT AND ITS ASSOCIATED DEVICE WILL HAVE A SEPARATE IDENTIFIER THAT EQUATES TO THE FOLLOWING CODES:

0	BUILDING/STRUCTURAL
1	PUMP/MOTOR
2	PROCESS CONTROL EQUIPMENT (VALVES, GATES, ETC.)
3	VENTILATION EQUIPMENT
4	BLOWERS AND CONVEYORS
5	MIXERS/AERATORS
6	TANKS/VAULTS
7	SCREENS
8	MISCELLANEOUS
9	ANALOG AND DISCRETE INSTRUMENTS

2. SECOND AND THIRD NUMBERS EQUATE TO A SEQUENTIAL NUMBERING OF THE TYPES OF DEVICE. EX. LSL-101, LSH-101. IF A PROCESS AREA HAS TWO SETS OF THE SAME TYPE OF DEVICE THE SECOND NUMBER SHALL BE INCREMENTED ACCORDINGLY. EX. LSH-101, LSH-111.
3. A LETTER SUFFIX CAN BE ADDED IF REQUIRED TO DIFFERENTIATE BETWEEN DIFFERENT BUT SIMILAR POINTS. EX. LSH-101A.

TAG EXAMPLES

1. RUN STATUS FOR PUMP NO.1 IN BUILDING NO.4: 400-MN-101
2. PRESSURE SWITCH FOR PUMP NO.3 IN BUILDING NO.1: 100-PSH-903
3. GAS FLOW INDICATING TRANSMITTER IN BUILDING NO.2: 200-FIT-901

INSTRUMENTATION IDENTIFICATION SCHEDULE

	FIRST LETTER		SUCCEEDING LETTER		
	VARIABLE	MODIFIER	PASSIVE FUNCTION	OUTPUT FUNCTION	MODIFIER
A	ANALYSIS		ALARM		AUTOMATIC
B	BREAKER		USER'S CHOICE	CLOSE OR STOP	BYPASS
C	COMMUNICATIONS			CONTROL	
D	DENSITY	DIFFERENTIAL		OPEN OR START	
E	VOLTAGE (EMF)		PRIMARY ELEMENT	SENSOR	
F	FLOW RATE	RATIO	FAIL	FAIL	FAIL
G	GAUGING		GLASS		LOCAL/MANUAL/HAND
H	HAND				HIGH OR OPEN
I	CURRENT		INDICATE		INTERMEDIATE
J	POWER	SCAN			
K	TIME	TIME RATE		CONTROL STATION	
L	LEVEL		LIGHT		LOW OR CLOSE
M	MOTOR	MOMENTARY		MOTOR	MIDDLE
N	USER'S CHOICE		INPUT	FORWARD	ON OR OPERATE
O				OFF	OVERLOAD
P	PRESSURE	PNEUMATIC	POINT (TEST)	POSITION	
Q	QUANTITY OR EVENT	TOTALIZE		EMERGENCY/ABNORMAL	
R	RADIOACTIVITY		RECORD OR PRINT	REMOTE	RUN
S	SPEED OR FREQUENCY	SUM	SWITCH	SWITCH	STOP
T	TEMPERATURE			TRANSMIT	
U	MULTIVARIABLE		MULTIFUNCTION	MULTIFUNCTION	MULTIFUNCTION
V	VARIABLE OR VISCOSITY			VALVE OR DAMPER	VFD / VALVE
W	WEIGHT OR FORCE		WELL		
X	MOD, LIGHT OR VALVE		UNCLASSIFIED	UNCLASSIFIED	UNCLASSIFIED
Y	INTERLOCK			RELAY OR COMPUTE	RESET
Z	POSITION			DRIVE OR ACTUATOR	

INSTRUMENT, EQUIPMENT AND CONTROL DEVICE EXAMPLES

FE	=	FLOW ELEMENT	TSH	=	TEMPERATURE SWITCH HIGH
FIT	=	FLOW INDICATING TRANSMITTER	ZSC	=	POSITION SWITCH CLOSED
PE	=	PRESSURE ELEMENT	ZSO	=	POSITION SWITCH OPEN
PIT	=	PRESSURE INDICATING TRANSMITTER	FS	=	FLOW SWITCH
PI	=	PRESSURE INDICATOR	LSL	=	LEVEL SWITCH LOW
PSH	=	PRESSURE SWITCH HIGH	LSH	=	LEVEL SWITCH HIGH

N:\14256-028\CADD\14256028100-01.dwg

REVISIONS

CLIENT INFORMATION

SUSSEX COUNTY, DE
ENGINEERING
DEPARTMENT

INLAND BAYS RWF
PHASE #2 EXPANSION:
CONTRACT S19-10

KEY PLAN

GRAPHIC SCALES

SIGNATURE



Whitman, Requardt & Associates, LLP
801 South Caroline Street, Baltimore, Maryland 21231

LEGENDS, ABBREVIATIONS AND GENERAL NOTES (1 OF 2)

DRAWING NO.

I00.01

SCALE: AS SHOWN

DATE: JULY 2019 | SHEET 175 OF 229

DES: SKB | DRAWN: SKB | CHECK: PWG

PROCESS AND INSTRUMENTATION DIAGRAM SYMBOLS

- FIELD MOUNTED DEVICE
- PANEL MOUNTED DEVICE
- INDICATING LAMP – X INDICATES LENS COLOR
  R = RED, A = AMBER
  G = GREEN, W = WHITE
- ABC – LETTERS INDICATE FUNCTION ACCORDING TO ISA SCHEDULE: 123 DIGITS IDENTIFY ASSOCIATED EQUIPMENT (SEE LOOP IDENTIFICATION SCHEDULE)
- SELECTOR SWITCH (MAINTAINED CONTACTS)
  XXX = H/O/A : HAND–OFF–AUTO
  L/L/S : LEAD–LAG–STANDBY
  F/O/R : FORWARD–OFF–REVERSE
- PROGRAMMABLE LOGIC CONTROLLER (PLC) I/O POINT
- INTERLOCK–PLC LOGIC OR HARDWIRED AS SHOWN ON DRAWINGS:
- PROCESS PUMP
- MAGNETIC FLOW METER
- DENSITY METER
- LEVEL FLOAT SWITCH
- ULTRASONIC LEVEL TRANSMITTER
- RADAR LEVEL TRANSMITTER
- SUBMERSIBLE LEVEL TRANSDUCER
- PRESSURE GAUGE WITH INLINE ANNULAR SEAL
- PRESSURE GAUGE AND SWITCH WITH INLINE ANNULAR SEAL
- PRESSURE GAUGE WITH DIAPHRAGM SEAL
- PRESSURE GAUGE AND SWITCH WITH DIAPHRAGM SEAL
- VFD/RVSS KEYPAD

SIGNAL LINE TYPES

- COMMUNICATION SIGNAL
- PLC I/O SIGNAL
- ELECTRICAL SIGNAL

SIGNAL INTERFACE

- ANALOG INPUT
- ANALOG OUTPUT
- DISCRETE INPUT
- DISCRETE OUTPUT

- NEEDLE VALVE
- BALL VALVE
- PRESSURE RELIEF VALVE
- CHECK VALVE
- SLIDE GATE
- SOLENOID VALVE
- MOTORIZED GATE VALVE
- MOTORIZED KNIFE GATE VALVE
- PNEUMATIC KNIFE GATE VALVE
- MOTORIZED PLUG VALVE
- MOTORIZED BALL VALVE
- MIXER
- CHANNEL GRINDER

ELEMENTARY WIRING SYMBOLS

- CRXX / CR — CONTROL RELAY
- XXX — NORMALLY OPEN CONTACT
- XXX — NORMALLY CLOSED CONTACT
- TRXX / TR — TIMING RELAY
- NORMALLY OPEN TIMED CLOSED CONTACT
- NORMALLY CLOSE CONTACT TIMED OPEN
- FUSE
- CIRCUIT BREAKER
- SELECTOR SWITCH XOO= REPRESENT THE NUMBER OF SWITCH POSITIONS
- PUSH BUTTON, NORMALLY OPEN
- PUSH BUTTON, NORMALLY CLOSED
- EMERGENCY STOP PUSH BUTTON, NORMALLY OPEN
- EMERGENCY STOP PUSH BUTTON, NORMALLY CLOSED
- PUSH–TO–TEST PILOT LIGHT R=RED, G=GREEN, A=AMBER, W=WHITE
- PLC OUTPUT VIA INTERPOSING RELAY
- MOTOR
- MOTOR OPERATED DAMPER
- TERMINAL BLOCK
- THERMOSTAT, CLOSE ON RISING/TEMPERATURE
- THERMOSTAT, OPEN ON RISING/TEMPERATURE
- LIMIT SWITCH, NORMALLY OPEN
- LIMIT SWITCH, NORMALLY CLOSED
- FLOAT SWITCH, NORMALLY OPEN
- FLOAT SWITCH, NORMALLY CLOSED
- PRESSURE SWITCH, NORMALLY CLOSED, PRESSURE OPEN
- PRESSURE SWITCH, NORMALLY OPEN, PRESSURE CLOSE
- FLOW SWITCH, NORMALLY OPEN
- FLOW SWITCH, NORMALLY CLOSED
- INTRINSICALLY SAFE RELAY
- INTRINSICALLY SAFE BARRIER
- MMS — MANUAL MOTOR STARTER WITH OVERLOAD AND SELECTOR SWITCH
- OVERLOAD
- GROUND
- SOV — SOLENOID VALVE
- ETM — ELAPSED TIME METER
- CONTROL POWER TRANSFORMER
- NEW CONTROL WIRING
- NEW FIELD CONTROL WIRING
- COMMUNICATION SIGNAL

PCS ARCHITECTURE SYMBOLS

- PROGRAMMABLE LOGIC COMPUTER (PLC) WITH I/O RACK AND COMMUNICATIONS MODULES
- REMOTE I/O RACK WITH COPPER ETHERNET PORT
- ROUTER
- SERVER
- VPN GATEWAY
- ACCESS POINT
- LAYER 2 NETWORK SWITCH (TYPE "X") X = SEE NETWORK HARDWARE SCHEDULE
- LAYER 3 NETWORK SWITCH (TYPE "X") X = SEE NETWORK HARDWARE SCHEDULE
- FIREWALL
- WORKSTATION
- LAPTOP
- FIBER OPTIC CABLE
- CAT6 ETHERNET CABLE
- HARDWIRED I/O SIGNALS
- EXISTING FIBER OPTIC CABLE
- EXISTING CAT6 ETHERNET CABLE

PLAN SYMBOLS

- FIELD MOUNTED DEVICE/INSTRUMENT TAG
- THERMOSTAT, HIGH TEMP.
- FREEZESTAT
- CONTROL ENCLOSURE
- HOME RUN CONDUIT/CABLE
- C–X — CONDUIT TAG. SEE TAG IDENTIFICATION SCHEDULE

GENERAL CIRCUIT/CONDUIT TAG IDENTIFICATION

TAG	CONDUIT SIZE	CONDUCTORS	NOTES
C–X (Y)	3/4" (X=2 THRU 18) 1" (X=19 THRU 30) 2" (X=31 THRU 100)	X–#14, 1–#12G	(Y) DENOTES ADDITIONAL SPARES
P–X (Y)	3/4" (X=2 THRU 14) 1" (X=15 THRU 24) 2" (X=25 THRU 80)	X–#12, 1–#12G	(Y) DENOTES ADDITIONAL SPARES
TSP–X (Y)	3/4" (X=1,2) 1" (X=3,4) 2" (X=5 THRU 16)	X–#18 TWISTED SHIELDED PAIR	(Y) DENOTES ADDITIONAL SPARES
TST–X (Y)	3/4" (X=1,2) 1" (X=3,4) 2" (X=5 THRU 16)	X–#18 TWISTED SHIELDED TRIAD	(Y) DENOTES ADDITIONAL SPARES
ETH–X(Y)	1" (X=1 THRU 4)	X–# OF CAT6 CABLES	(Y) DENOTES ADDITIONAL SPARES
FO–X	1" (X=2–18) 2" (X=18–48)	X–# OF MULTIMODE FIBER OPTIC STRANDS	COORDINATE CONDUIT AND INSTALLATION REQUIREMENTS WITH F.O. CABLE MANUFACTURE CABLE SIZES AND BEND RADIUS REQUIREMENTS
M–X	CONDUIT SIZE AS REQUIRED	X–MANUFACTURER SUPPLIED CABLE	CABLE AS PROVIDED OR RECOMMENDED BY EQUIPMENT MANUFACTURER. COORDINATE CONDUIT AND INSTALLATION REQUIREMENTS WITH MANUFACTURER.
AC–X (Y)	1" (X=1,2)	X–ANTENNA CABLE	(Y) DENOTES ADDITIONAL SPARES
		TOTAL CONDUCTORS REQUIRED = X + Y	

REVISIONS

CLIENT INFORMATION

SUSSEX COUNTY, DE
ENGINEERING
DEPARTMENT

INLAND BAYS RWF
PHASE #2 EXPANSION:
CONTRACT S19–10

KEY PLAN

GRAPHIC SCALES

SIGNATURE

PADDACK, WILLIAM G.
LICENSE
No. 10620
7/11/19
DELAWARE
PROFESSIONAL ENGINEER

WRA
Whitman, Requardt & Associates, LLP
801 South Caroline Street, Baltimore, Maryland 21231

LEGENDS, ABBREVIATIONS AND GENERAL NOTES (2 OF 2)

DRAWING NO.

I00.02

SCALE: AS SHOWN		
DATE: JULY 2019	SHEET 176 OF 229	
DES: SKB	DRAWN: SKB	CHECK: PWG

N:\14256-026\CADD\1425602800-02.dwg

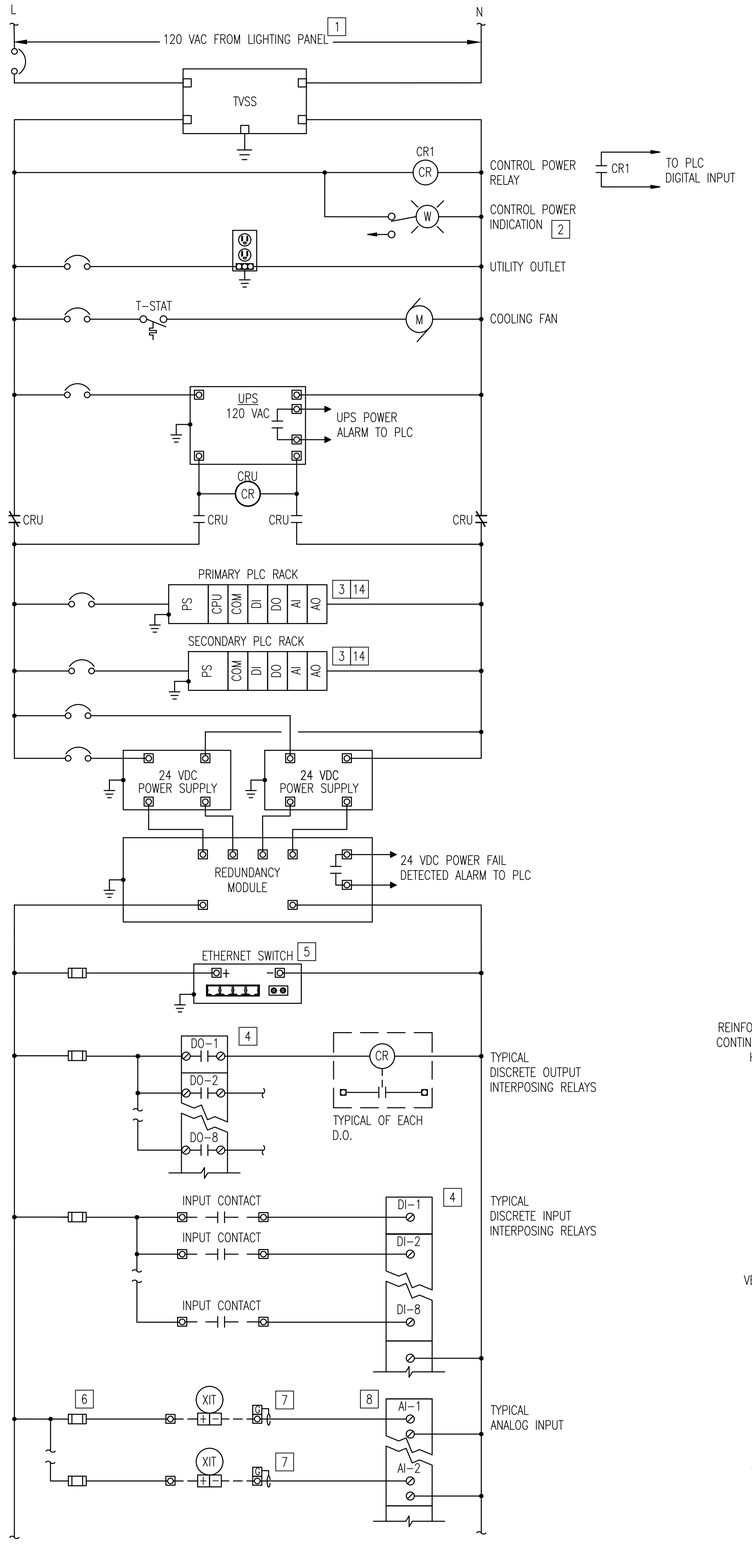

1 I00.04 PCS PANEL CONTROL DIAGRAM

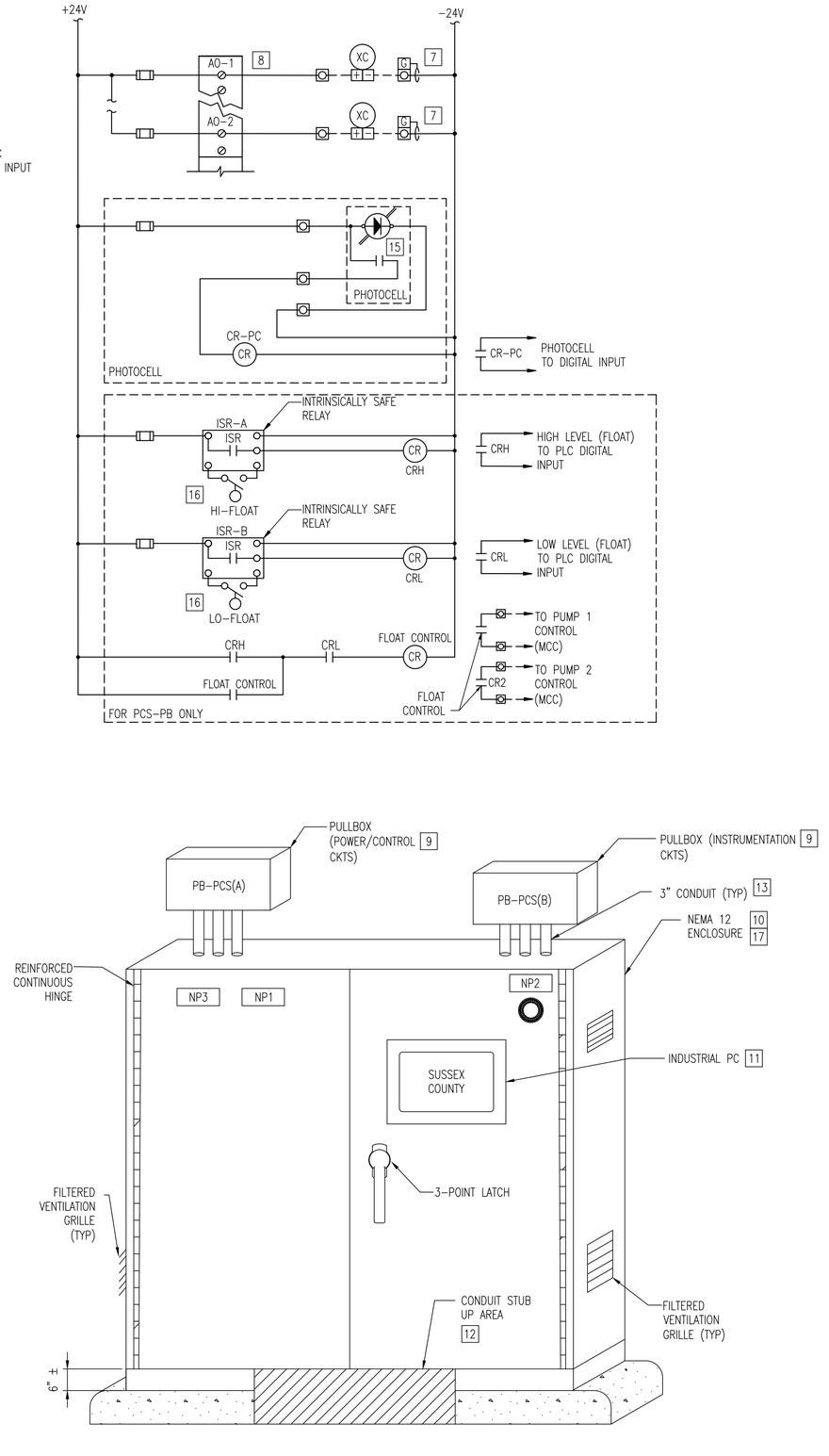

2 I00.04 PCS PANEL ELEVATION

GENERAL NOTES:

1. SEE I&C SYMBOLS, LEGENDS AND ABBREVIATIONS SHEET FOR DETAILS.
2. PANEL ELEVATION DIMENSIONS ARE APPROXIMATE, SIZE PANELS AS REQUIRED.
3. CONTRACTOR SHALL PROVIDE SURGE PROTECTION TERMINAL BLOCK FOR INSTRUMENTS LOCATED OUTSIDE BUILDINGS.
4. REFER TO ELECTRICAL & MECHANICAL DRAWINGS FOR ADDITIONAL EQUIPMENT LOCATIONS AND INFORMATION.

X SPECIFIC NOTES:

1. SEE ELECTRICAL DRAWINGS FOR LIGHTING PANEL LOCATION AND TERMINATION POINTS.
2. EQUIPMENT MOUNTED ON THE FACE OF THE CONTROL PANEL. ALL OTHER ITEMS MOUNTED INTERIOR TO CONTROL PANEL.
3. NOT ALL I/O WIRING AND CONNECTIONS TO I/O CARDS ARE SHOWN. PROVIDE WIRING FOR I/O TO PLC I/O AS REQUIRED FOR ACTIVE AND SPARE I/O PER THE I/O LIST IN THE SPECIFICATIONS AND THE CONTRACT DRAWINGS, AS APPLICABLE. PROVIDE PLC RACKS AS SHOWN ON THE PCS SCHEDULE FOR THE REQUIRED I/O.
4. PROVIDE FUSED POWER TO DISCRETE IO POINTS IN GROUPS OF 8 FOR BOTH ACTIVE AND SPARE.
5. NOT ALL ETHERNET AND FIBER OPTIC PORTS SHOWN. PROVIDE PORTS FOR ALL REQUIRED CONNECTIONS PLUS 20% SPARE. REFER TO NETWORK ARCHITECTURE FOR ADDITIONAL NETWORK SWITCH DETAILS.
6. PROVIDE INDIVIDUAL 0.1A FUSED ANALOG INPUT CIRCUITS FOR EACH ANALOG SIGNAL.
7. ANALOG SIGNAL WIRING SHALL BE TWISTED SHIELDED PAIRS WITH SHIELD GROUNDED AT ONE END. GROUND IN PCS WHERE POSSIBLE.
8. LOOP DIAGRAMS SHOWN SIMPLIFIED FOR CLARITY. USE TWISTED SHIELDED CONDUCTORS WITH DRAIN WIRES GROUNDED IN ACCORDANCE WITH MANUFACTURERS RECOMMENDATIONS FOR ALL ANALOG POINTS.
9. PULL BOXES: PROVIDE OVERHEAD PULL BOXES TO FACILITATE CIRCUIT AND CONDUIT CONNECTIONS TO THE PCS CABINETS. PULL BOXERS SHALL BE WALL OR CEILING MOUNTED ABOVE EACH PCS CABINET AND STAGGERED TO PERMIT CONDUIT PENETRATIONS FROM MULTIPLE DIRECTIONS. PROVIDE 3" CONDUITS BETWEEN EACH PULL BOX AND THE PCS CABINET AS SHOWN.
10. PCS CABINETS: COMPONENTS AND WIRING ARE TYPICAL FOR EACH PCS CABINET. REFER TO SCHEDULE, NOTES AND SPECIFICATIONS FOR ADDITIONAL INFORMATION.
11. INDUSTRIAL PC: MOUNT INDUSTRIAL PC ±60" FROM FINISHED FLOOR.
12. PCS CABINET CONDUIT STUB UP AREA: PROVIDE CUTOUT IN BOTTOM OF ENCLOSURE TO ACCOMMODATE BOTTOM FED CONDUITS.
13. PROVIDE QUANTITY OF CONDUITS AS REQUIRED FOR THE CABLES SHOWN ON THE PLAN DRAWINGS PLUS ADDITIONAL 20% SPARE CAPACITY.
14. PLC RACK(S): THE PROCESS CONTROL SYSTEM SHOWN IN THE CONTRACT DRAWINGS IS BASED ON SCHNEIDER ELECTRIC'S MODICON M340 PLATFORM. REFER TO SPECIFICATIONS FOR PLC, COMMUNICATIONS AND INDIVIDUAL MODULE REQUIREMENTS. REFER TO THE I/O DATA TABLES IN THE SPECIFICATIONS FOR NUMBER OF MODULES REQUIRED.
15. WALL MOUNTED PHOTOCELL: MOUNT OUTSIDE OF BUILDINGS AS INDICATED ON PLAN DRAWINGS.
16. INTRINSICALLY SAFE WIRING CIRCUITS SHALL ENTER PCS CABINET AT SAME LOCATION, SHALL BE PHYSICALLY SEPARATED FROM ALL OTHER PANEL WIRING BY A MINIMUM OF 2 INCHES, AND SHALL BE INSTALLED IN ACCORDANCE WITH APPLICABLE NEC AND UL-698A REQUIREMENTS.
17. REFER TO PLAN DRAWINGS FOR MINIMUM DIMENSIONAL REQUIREMENTS.

PCS PANEL SCHEDULE

CABINET ID	LOCATION
PCS-PBB2	PUMP AND BLOWER BUILDING 2
PCS-IPS	FILTERED IRRIGATION PUMP STATION

PCS PANEL NAMEPLATE LEGEND

NAMEPLATE #	DESCRIPTION
NP-1	PCS CABINET ID
NP-2	CONTROL POWER ON
NP-3	CAUTION - PANEL IS FED FROM MULTIPLE POWER SOURCES

REVISIONS		

CLIENT INFORMATION

SUSSEX COUNTY, DE ENGINEERING DEPARTMENT

INLAND BAYS RWF PHASE #2 EXPANSION: CONTRACT S19-10

KEY PLAN

GRAPHIC SCALES

SIGNATURE

PATRICK WILLIAM GUIDA LICENSE NO. 10620 DELAWARE PROFESSIONAL ENGINEER 7/11/19

Whitman, Requardt & Associates, LLP
801 South Caroline Street, Baltimore, Maryland 21231

TYPICAL PCS PANEL CONTROL DIAGRAM AND PANEL ELEVATION

DRAWING NO. I00.03

SCALE: AS SHOWN

DATE: JULY 2019 | SHEET 177 OF 229

DES: SKB | DRAWN: SKB | CHECK: PWG

N:\14256-028\CADD\1425602800-03.dwg

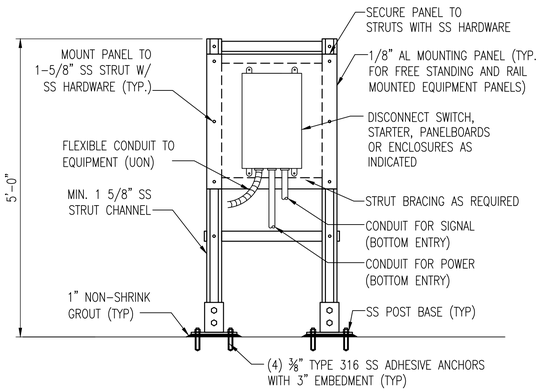

ELEVATION

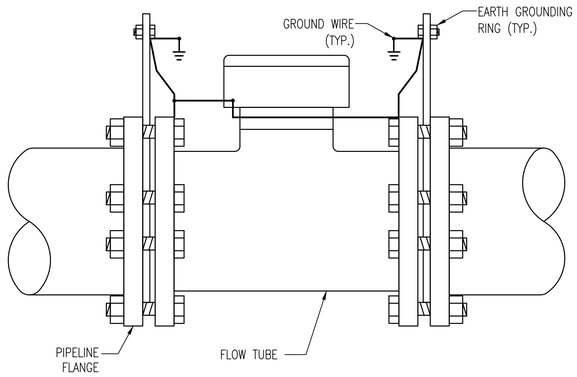

2 / 100.04 FLOWMETER GROUNDING RING DETAIL [1]

GENERAL NOTES

1. SEE I&C SYMBOLS, LEGENDS AND ABBREVIATIONS SHEET FOR DETAILS.

[X] SPECIFIC NOTES

1. COORDINATE GROUND WIRE CONDUCTOR SIZE WITH ELECTRICAL GROUNDING PLAN AND DETAILS.
2. PROVIDE LEVEL FLOAT SWITCH QUANTITIES AS SHOWN ON THE CONTRACT DRAWINGS.

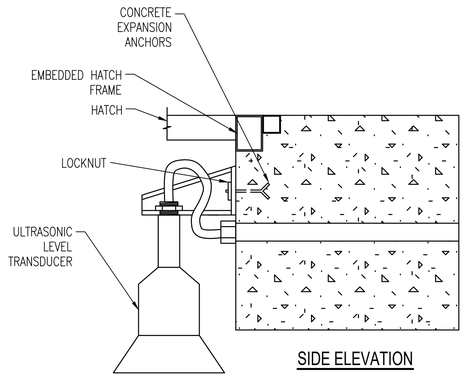

SIDE ELEVATION

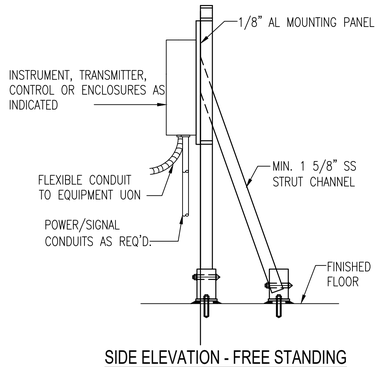

SIDE ELEVATION - FREE STANDING

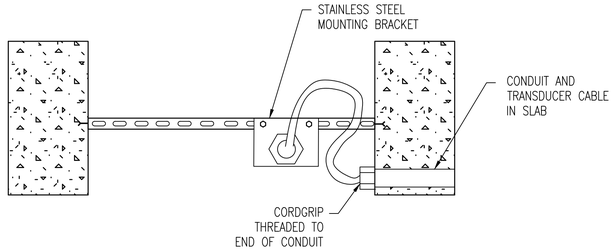

TOP VIEW

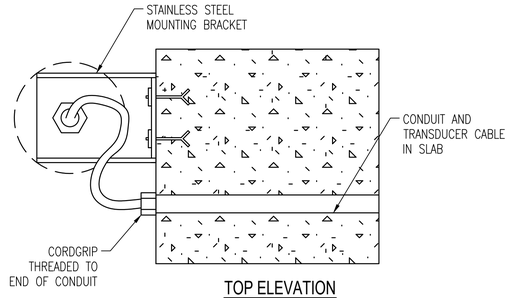

TOP ELEVATION

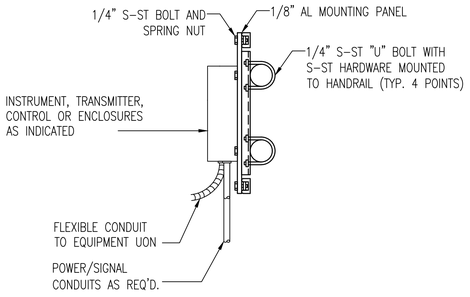

SIDE ELEVATION - RAIL MOUNTED

1 / 100.04 MOUNTING DETAIL INSTRUMENTATION DEVICES OR ENCLOSURES

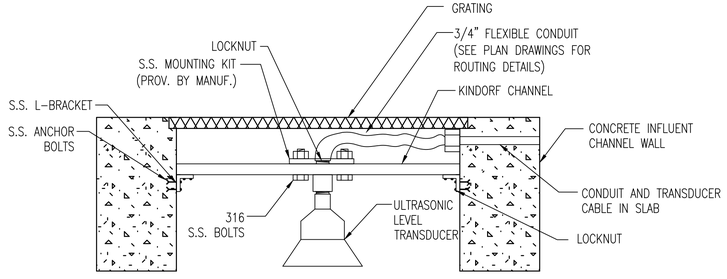

SIDE VIEW

3 / 100.04 ULTRASONIC LEVEL SENSOR CHANNEL MOUNTING DETAIL

4 / 100.04 ULTRASONIC LEVEL SENSOR WALL MOUNTING DETAIL

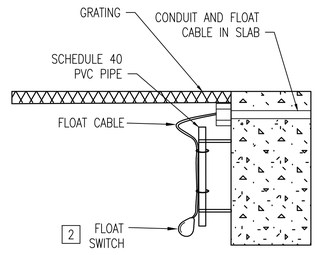

5 / 100.04 FLOAT SWITCH MOUNTING DETAIL

REVISIONS		

CLIENT INFORMATION

SUSSEX COUNTY, DE ENGINEERING DEPARTMENT

INLAND BAYS RWF PHASE #2 EXPANSION: CONTRACT S19-10

KEY PLAN

GRAPHIC SCALES

SIGNATURE



Whitman, Requardt & Associates, LLP
801 South Caroline Street, Baltimore, Maryland 21231

INSTRUMENTATION DETAILS

DRAWING NO.

I00.04

SCALE: AS SHOWN		
DATE: JULY 2019	SHEET 178 OF 229	
DES: JJN	DRAWN: JJN	CHECK: PWG

N:\14256-026\CADD\14256026I00-04.dwg

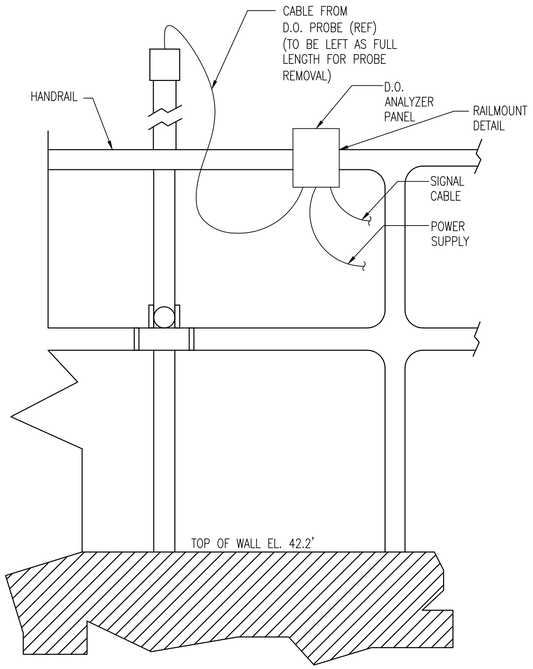

1 / 100.05 D.O. ANALYZER PANEL MOUNTING DETAIL 1
SCALE: NONE

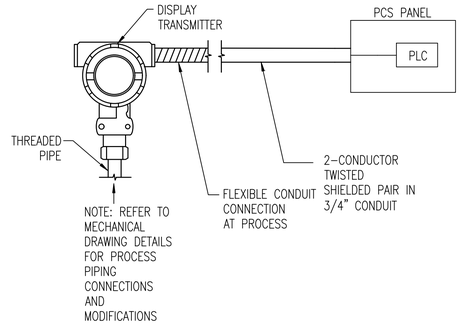

3 / 100.05 PRESSURE TRANSMITTER MOUNTING DETAIL

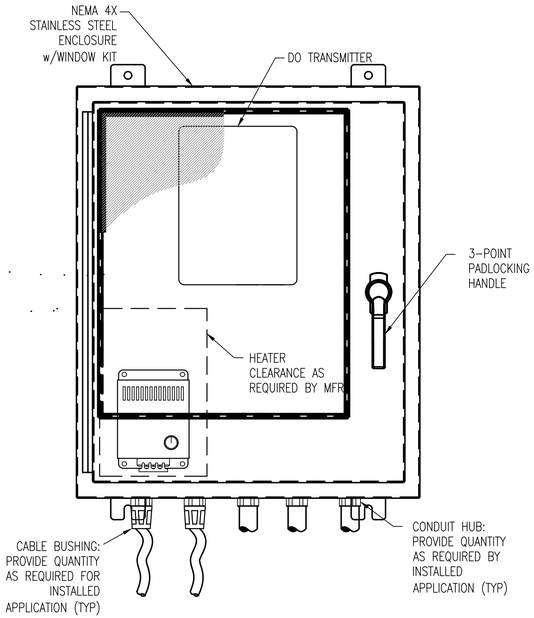

2 / 100.05 TYPICAL D.O. ANALYZER PANEL ELEVATION
SCALE: NONE

GENERAL NOTES

1. SEE I&C SYMBOLS, LEGENDS AND ABBREVIATIONS SHEET FOR DETAILS.

X SPECIFIC NOTES

1. REFER TO MECH. DRAWINGS FOR ADDITIONAL INSTALLATION DETAILS.

REVISIONS

CLIENT INFORMATION

SUSSEX COUNTY, DE
ENGINEERING
DEPARTMENT

INLAND BAYS RWF
PHASE #2 EXPANSION:
CONTRACT S19-10

KEY PLAN

GRAPHIC SCALES

SIGNATURE

PADRAIC WILLIAM
LICENSE
No. 16620
7/11/2019
DELAWARE
PROFESSIONAL ENGINEER

Whitman, Requardt & Associates, LLP
801 South Caroline Street, Baltimore, Maryland 21231

INSTRUMENTATION
DETAILS (CONT.)

DRAWING NO.
I00.05

SCALE: AS SHOWN
DATE: JULY 2019 | SHEET 179 OF 229
DES: JJN | DRAWN: JJN | CHECK: PWG

N:\14256-026\CADD\14256026I00-05.dwg

GENERAL SHEET NOTES

1. SEE I&C SYMBOLS, LEGENDS AND ABBREVIATIONS SHEET FOR DETAILS.
2. SEE ELECTRICAL DRAWINGS FOR ADDITIONAL INSTALLATION AND EQUIPMENT REQUIREMENTS.
3. NOT IN CONTRACT (NIC) SITE WORK INDICATED FOR REFERENCE. NIC WORK CONSTRUCTION WAS IN PROGRESS DURING DEVELOPMENT CONTRACT DRAWINGS OF THIS PROJECT.
4. EX. CONDUIT CONTAINING FIBER OPTIC CABLE TO BE REMOVED IS SHOWN IN BOLD.
5. CONDUIT SHOWN BASED ON RECORD DRAWINGS. CONTRACTOR SHALL BE RESPONSIBLE FOR FIELD VERIFYING EX. LOCATIONS AND CONDITIONS.

X SPECIFIC SHEET NOTES

1. EX. DUCTBANK CONTAINS (1) 4" CONDUIT WITH (3) INTERDUCTS. DEMO EX. MULTIMODE FIBER OPTIC CABLE.
2. EX. DUCTBANK CONTAINS (1) 4" CONDUIT WITH (3) INTERDUCTS. DEMO EX. MULTIMODE FIBER OPTIC CABLE BETWEEN HAND HOLES.
3. EX. 1" DIRECT BURIED CONDUIT. DEMO EX. MULTIMODE FIBER OPTIC CABLE.
4. EX. 2" DIRECT BURIED CONDUIT. DEMO EX. MULTIMODE FIBER OPTIC CABLE.
5. EX. DUCTBANK CONTAINS (2) 4" CONDUITS. DEMO EX. MULTIMODE FIBER OPTIC CABLE.

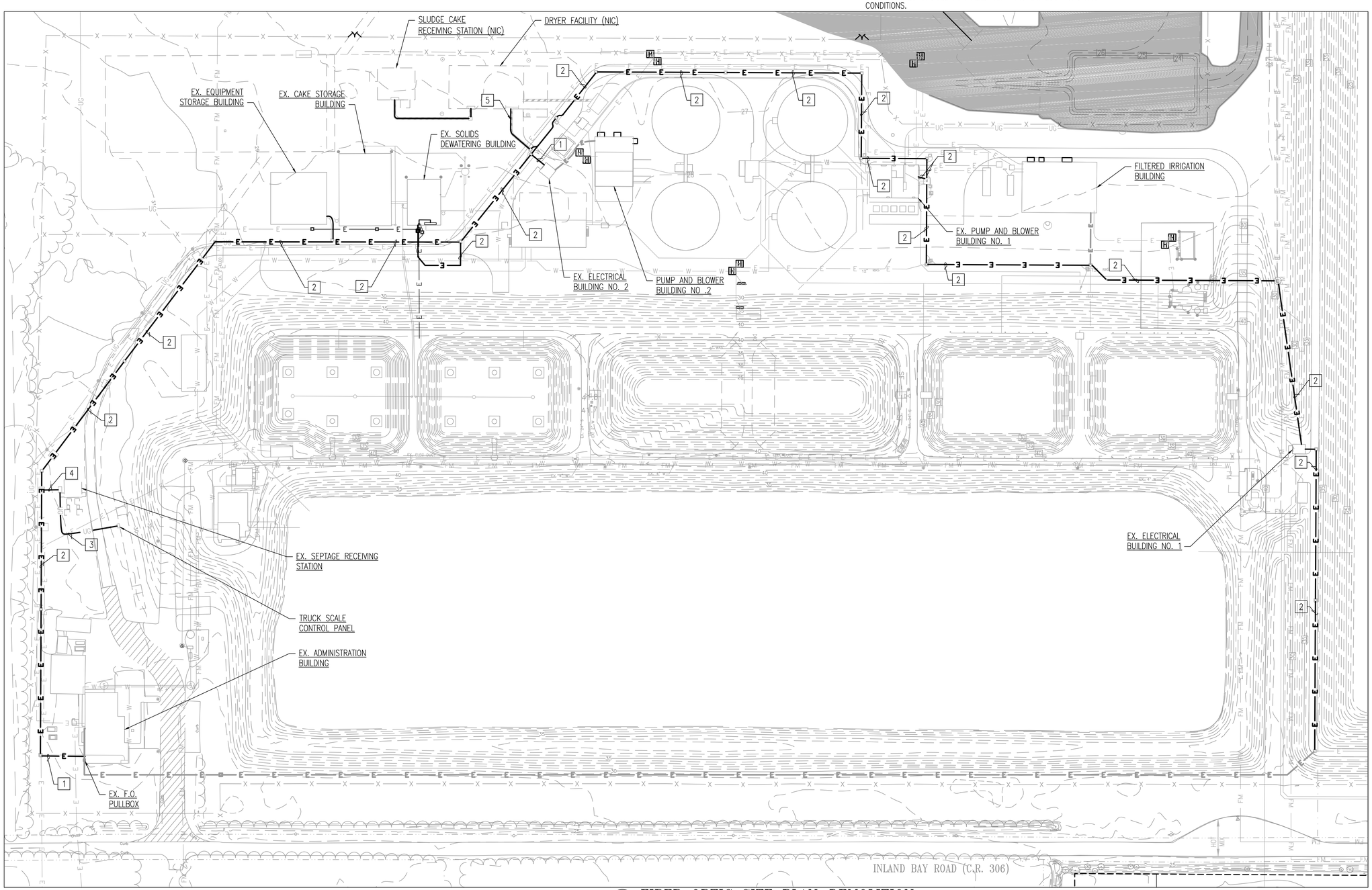

1 / I00.06 FIBER OPTIC SITE PLAN-DEMOLITION
SCALE: 1" = 60'

N:\14256-026\CADD\14256026I00-06.dwg

REVISIONS

CLIENT INFORMATION

SUSSEX COUNTY, DE
ENGINEERING
DEPARTMENT

INLAND BAYS RWF
PHASE #2 EXPANSION:
CONTRACT S19-10

KEY PLAN

GRAPHIC SCALES

0 30' 60' 120'
SCALE: 1" = 60'

SIGNATURE

PADRAIC WILLIAM GRAY LICENSE No. 16620 DELAWARE PROFESSIONAL ENGINEER

Whitman, Requardt & Associates, LLP
801 South Caroline Street, Baltimore, Maryland 21231

FIBER OPTIC NETWORK
SITE PLAN-DEMOLITION

DRAWING NO.
I00.06

SCALE: AS SHOWN		
DATE: JULY 2019	SHEET 180 OF 229	
DES: GAH	DRAWN: JJN	CHECK: PWG

GENERAL SHEET NOTES

1. SEE I&C SYMBOLS, LEGENDS AND ABBREVIATIONS SHEET FOR DETAILS.
2. SEE ELECTRICAL DRAWINGS FOR ADDITIONAL DUCTBANK AND CONDUIT DETAILS.
3. SEE SHEET I00.08 AND I00.09 FOR ADDITIONAL REQUIREMENTS:
   A) PATCH CABLE QUANTITY
   B) FIBER OPTIC CABLE STRAND QUANTITY
   C) FIBER OPTIC ROUTING
4. CONDUIT SHOWN BASED ON RECORD DRAWINGS. CONTRACTOR SHALL BE RESPONSIBLE FOR FIELD VERIFYING EX. LOCATIONS AND CONDITIONS.
5. DUCTBANKS SHOWN BOLD ARE TO IDENTIFY NEW FIBER OPTIC PATH. SEE E-DRAWINGS FOR NEW DUCTBANK REQUIREMENTS.
6. UNLESS OTHERWISE NOTED, ALL FIBER OPTIC CONDUIT IS 4" WITH 3 INTERDUCTS. REFER TO INSTRUMENTATION DETAILS.

X SPECIFIC SHEET NOTES

1. NEW 24 STRAND FIBER OPTIC CABLE SHALL CONTAIN 3 METER SERVICE LOOP. BUNDLE, COIL, AND LABEL CABLE INSIDE OF HAND HOLE.
2. 1" DIRECT BURIED FIBER OPTIC CONDUIT.
3. 2" DIRECT BURIED FIBER OPTIC CONDUIT.
4. DIRECT BURIED CONDUIT. CONTRACTOR TO FIELD VERIFY EX. CONDUIT SIZES.
5. SEE SHEET I00.10 FOR ADDITIONAL INSTALLATION DETAILS.

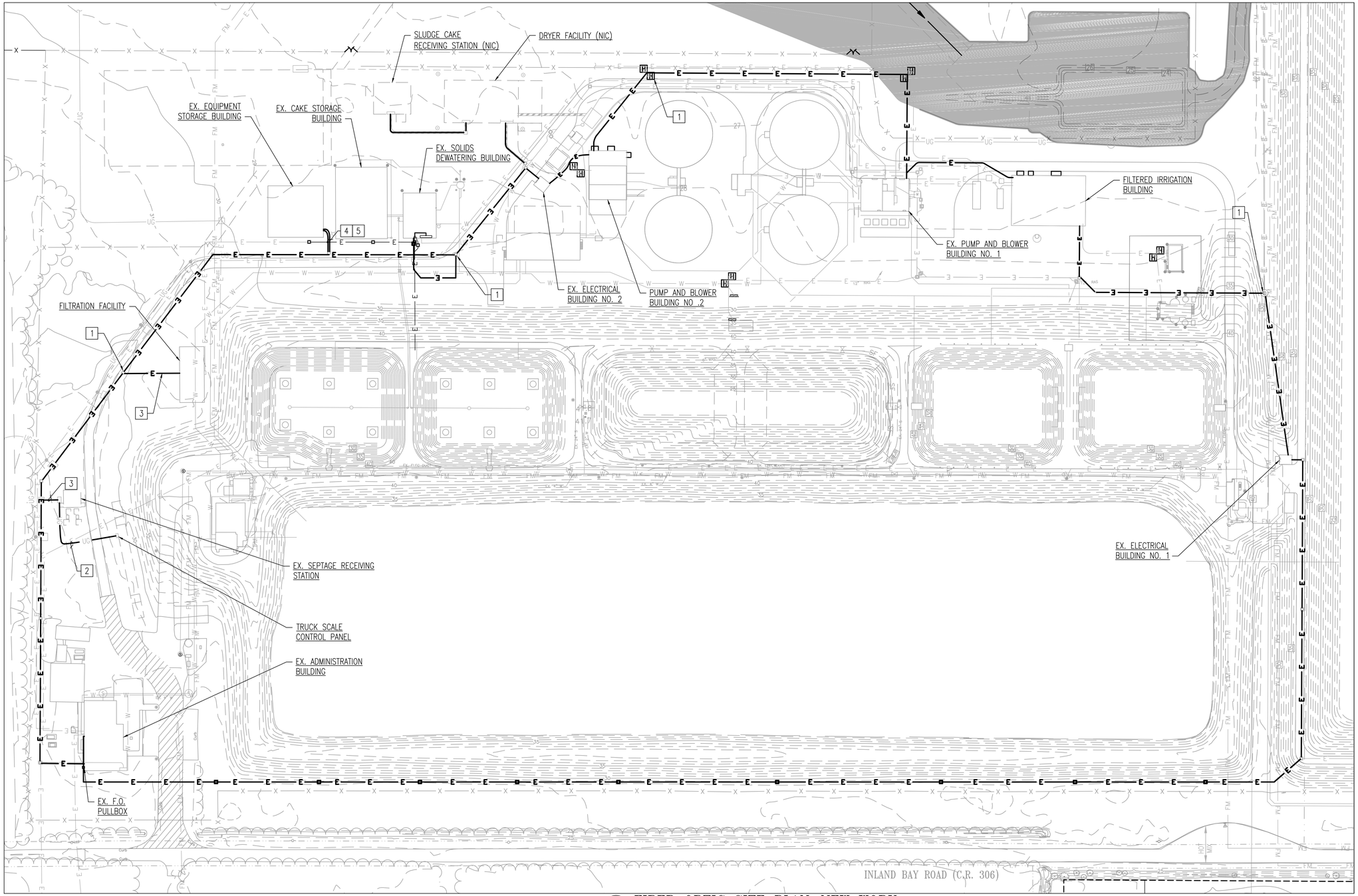

1 / I00.07 FIBER OPTIC SITE PLAN-NEW WORK
SCALE: 1" = 60'

N:\14256-026\CADD\14256026I00-07.dwg

REVISIONS		

CLIENT INFORMATION

SUSSEX COUNTY, DE
ENGINEERING
DEPARTMENT

INLAND BAYS RWF
PHASE #2 EXPANSION:
CONTRACT S19-10

KEY PLAN

GRAPHIC SCALES

0 30' 60' 120'
SCALE: 1" = 60'

SIGNATURE

PADRAIC WILLIAM GRAY LICENSE No. 16620 DELAWARE PROFESSIONAL ENGINEER

WRA
Whitman, Requardt & Associates, LLP
801 South Caroline Street, Baltimore, Maryland 21231

FIBER OPTIC NETWORK
SITE PLAN-NEW WORK

DRAWING NO.
I00.07

SCALE: AS SHOWN		
DATE: JULY 2019	SHEET 181 OF 229	
DES: GAH	DRAWN: JJN	CHECK: PWG

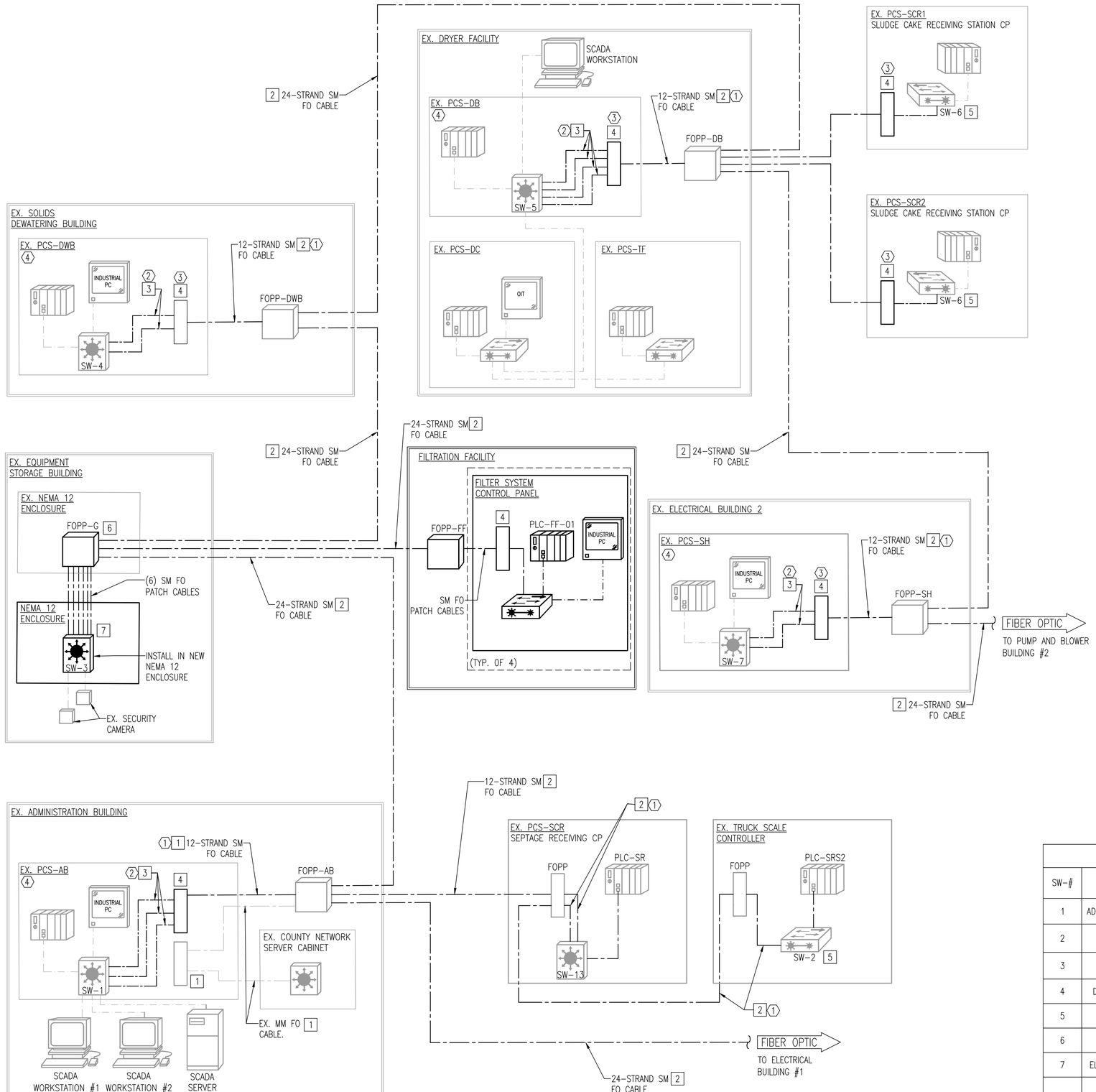

GENERAL NOTES

1. SEE I&C SYMBOLS, LEGENDS AND ABBREVIATIONS SHEET FOR DETAILS.
2. SEE ELECTRICAL DRAWINGS FOR ADDITIONAL INSTALLATION AND EQUIPMENT REQUIREMENTS.
3. EXISTING EQUIPMENT AND NETWORK COMPONENTS ARE SHOWN IN HALF-TONE.
4. NOT ALL ETHERNET SWITCH PORTS SHOWN FOR CLARITY. PROVIDE PORTS TO CONNECT ALL DEVICES SHOWN.
5. COORDINATE ALL NEW AND EXISTING LAN AND WAN IP ADDRESS SCHEMES WITH THE OWNER.
6. SEE ELECTRICAL SITE PLAN DRAWINGS AND DUCT BANK DETAILS FOR FIBER QUANTITIES, ROUTING, TERMINATIONS, AND SPLICING REQUIREMENTS.
7. NOT ALL FIBER OPTIC PAIRS SHOWN FOR CLARITY. PROVIDE FIBER STRAND QUANTITIES AS SHOWN. TERMINATE FIBER STRANDS AT PATCH PANELS TO PROVIDE THE NETWORK CONNECTIONS AS SHOWN.
8. ETHERNET SWITCHES SHALL BE CONFIGURED IN ACCORDANCE WITH THE REQUIREMENTS OF THE OWNER.
9. ALL FIBER OPTIC CABLES, FIBER OPTIC PATCH PANELS, AND TERMINATIONS SHALL BE THE RESPONSIBILITY OF THE SYSTEM INTEGRATOR.
10. ALL SINGLEMODE FIBER OPTIC TRUNK CABLES CONNECTING BUILDING/FACILITIES SHALL BE 24 STRAND FIBER CABLES. TERMINATE 12 STRANDS AT EACH BUILDING FACILITY FIBER OPTIC PATH PANEL. CABLES SHALL BE ROUTED THROUGH DUCTBANKS AS SHOWN ON THE FIBER OPTIC SITE PLAN.

DEMOLITION NOTES (X)

1. DEMOLISH EXISTING MULTIMODE FIBER OPTIC CABLE.
2. DEMOLISH EXISTING MULTIMODE FIBER OPTIC PATCH CABLES.
3. DEMOLISH EXISTING PANEL MOUNT PATCH PANEL.
4. DEMOLISH EXISTING MOXA ETHERNET SWITCH AND ALL ASSOCIATED CABLE AND TERMINATION. DISCONNECT POWER CONNECTIONS BACK TO THE SOURCE.

SPECIFIC NOTES [X]

1. TWO (2) EXISTING MULTIMODE FIBER OPTIC CABLES. DEMO ONE (1) MULTIMODE CABLE AND INSTALL A NEW 12 STRAND SINGLE MODE FIBER OPTIC CABLE. PRESERVE ONE (1) MULTIMODE CABLE TO BE USED FOR CONNECTION TO THE COUNTY'S EXISTING COMMUNICATION TOWER. PATCH EXISTING MULTIMODE FIBER AT THE EXISTING PCS PATCH PANEL FOR CONNECTION TO THE SERVER CABINET.
2. PROVIDE, INSTALL AND TERMINATE NEW SINGLEMODE FO CABLE. REPLACE ALL EXISTING MULTIMODE TERMINATIONS.
3. REPLACE EXISING MULTIMODE FIBER OPTIC PATCH CABLES IN KIND WITH NEW SINGLEMODE FIBER OPTIC PATCH CABLES AND CONNECTORS. COORDINATE CONNECTOR TYPES WITH ETHERNET SWITCH AND PATCH PANEL.
4. INSTALL NEW BELDEN DIN RAIL MOUNT MODULAR PATCH PANEL OR APPROVED EQUAL. COORDINATE CONNECTOR TYPES WITH PATCH CABLES.
5. EXISTING COPPER TO FIBER OPTIC MEDIA CONVERTER. CONFIGURE CONVERTER TO ACCEPT SINGLEMODE FIBER OPTIC LINKS. PROVIDE AND INSTALL PATCH CABLES AND CONNECTORS COMPATIBLE WITH THE MEDIA CONVERTER TERMINATIONS.
6. INSTALL NEW WALL MOUNT FIBER OPTIC PATCH PANEL IN EX. NEMA 12 NETWORK SWITCH ENCLOSURE. SEE FIBER OPTIC INSTALLATION DETAILS.
7. PROVIDE NEW NEMA 12 NETWORK SWITCH ENCLOSURE MOUNTED ADJACENT TO THE EXISTING NETWORK SWITCH ENCLOSURE IN THE EQUIPMENT STORAGE BUILDING.

EXISTING NETWORK SWITCH SCHEDULE

SW-#	LOCATION	MAKE / MODEL	FO PORTS / IN USE	RJ45 PORTS / IN USE	COMMENTS
1	ADMINISTRATION BUILDING	CISCO / IE3000-8TC	4 / 3	8 / 6	IE3000-4SM EXPANSION MODULE
2	TRUCK SCALE CONTROLLER	COPPER TO FO MEDIA CONVERTER	1 / 1	1 / 1	
3	GARAGE	CISCO / 29630-CX	2 / 2	10 / 2	REPLACE WITH NEW CISCO / IE3000-8TC
4	DEWATERING BUILDING	CISCO / IE3000-8TC	2 / 2	8 / 3	
5	DRYER BUILDING	CISCO / IE3000-8TC	2 / 1	8 / 4	
6	SLUDGE RECEIVING STATION 1 & 2	COPPER TO FO MEDIA CONVERTER	1 / 1	1 / 1	
7	ELECTRICAL BUILDING 2	CISCO / IE3000-8TC	6 / 4	8 / 3	IE3000-4SM EXPANSION MODULE
13	SEPTAGE RECEIVING STATION	CISCO / IE3000-8TC	2 / 2	8 / 1	

REVISIONS

CLIENT INFORMATION

SUSSEX COUNTY, DE
ENGINEERING DEPARTMENT

INLAND BAYS RWF
PHASE #2 EXPANSION:
CONTRACT S19-10

KEY PLAN

GRAPHIC SCALES

SIGNATURE

PENNIG WILLIAM G. JR. LICENSE NO. 10320 7/11/19 DELAWARE PROFESSIONAL ENGINEER

Whitman, Requardt & Associates, LLP
801 South Caroline Street, Baltimore, Maryland 21231

NETWORK ARCHITECTURE DIAGRAM

DRAWING NO.
I00.08

SCALE: AS SHOWN		
DATE: JULY 2019	SHEET 182 OF 229	
DES: JJN	DRAWN: JJN	CHECK: PWG

N:\14256-026\CADD\14256026I00-08.dwg

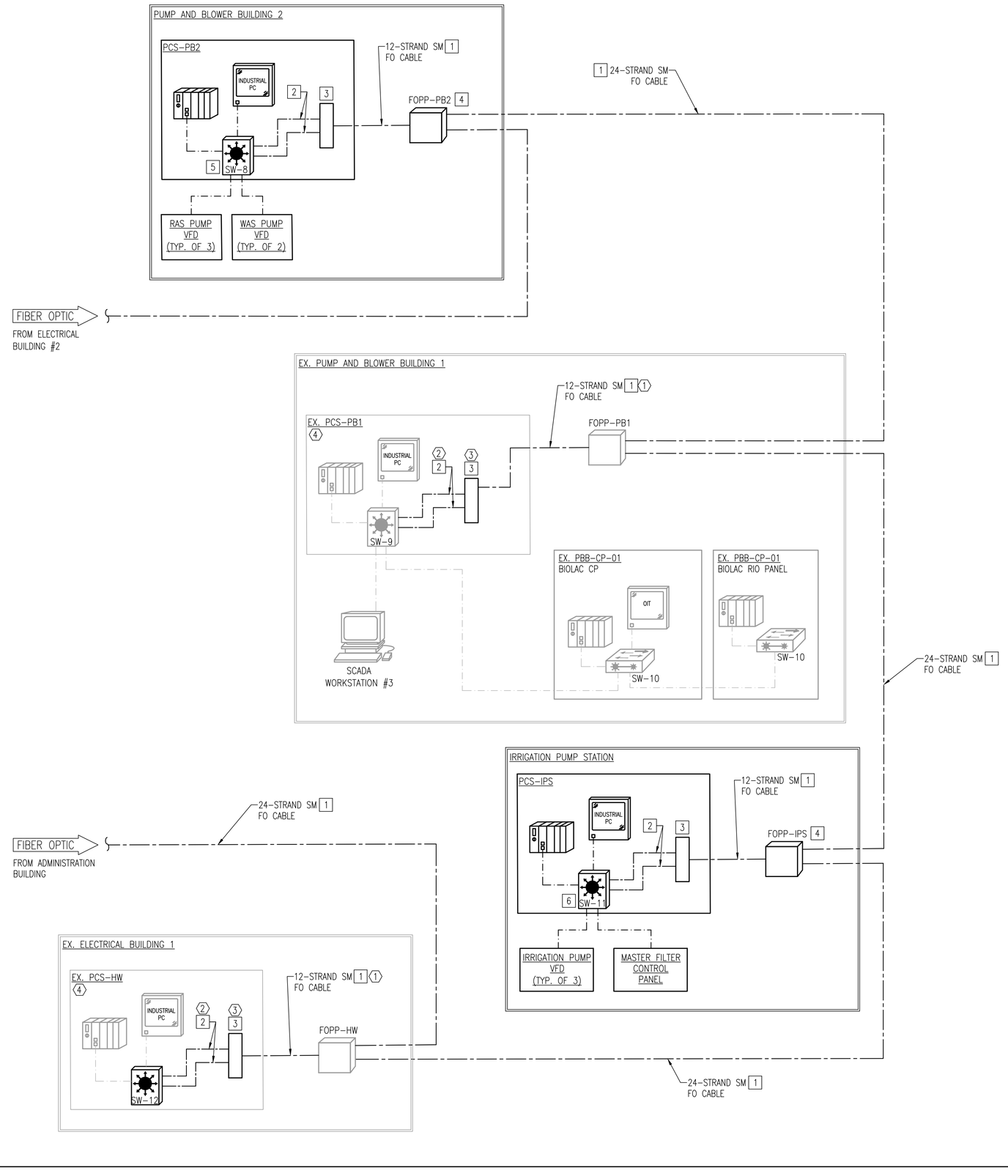

GENERAL NOTES

1. SEE I&C SYMBOLS, LEGENDS AND ABBREVIATIONS SHEET FOR DETAILS.
2. SEE ELECTRICAL DRAWINGS FOR ADDITIONAL INSTALLATION AND EQUIPMENT REQUIREMENTS.
3. EXISTING EQUIPMENT AND NETWORK COMPONENTS ARE SHOWN IN HALF-TONE.
4. NOT ALL ETHERNET SWITCH PORTS SHOWN FOR CLARITY. PROVIDE PORTS TO CONNECT ALL DEVICES SHOWN.
5. COORDINATE ALL NEW AND EXISTING LAN AND WAN IP ADDRESS SCHEMES WITH THE OWNER.
6. SEE ELECTRICAL SITE PLAN DRAWINGS AND DUCT BANK DETAILS FOR FIBER QUANTITIES, ROUTING, TERMINATIONS, AND SPLICING REQUIREMENTS.
7. CONTRACTOR SHALL INSPECT AND FIELD VERIFY EXISTING FIBER OPTIC NETWORK CONDITIONS AND PROVIDE AND INSTALL NEW TO MATCH EXISTING.
8. ETHERNET SWITCHES SHALL BE CONFIGURED IN ACCORDANCE WITH THE REQUIREMENTS OF THE OWNER.
9. ALL FIBER OPTIC CABLES, FIBER OPTIC PATCH PANELS, AND TERMINATIONS SHALL BE THE RESPONSIBILITY OF THE SYSTEM INTEGRATOR.
10. ALL SINGLEMODE FIBER OPTIC TRUNK CABLES CONNECTING BUILDING/FACILITIES SHALL BE 24 STRAND FIBER CABLES. TERMINATE 12 STRANDS AT EACH BUILDING FACILITY FIBER OPTIC PATCH PANEL. CABLES SHALL BE ROUTED THROUGH DUCTBANKS AS SHOWN ON THE FIBER OPTIC SITE PLAN.

DEMOLITION NOTES ⟨X⟩

1. DEMOLISH EXISTING MULTIMODE FIBER OPTIC CABLE.
2. DEMOLISH EXISTING MULTIMODE FIBER OPTIC PATCH CABLES.
3. DEMOLISH EXISTING PANEL MOUNT PATCH PANEL.
4. DEMOLISH EXISTING MOXA ETHERNET SWITCH AND ALL ASSOCIATED CABLE AND TERMINATION. DISCONNECT POWER CONNECTIONS BACK TO THE SOURCE.

SPECIFIC NOTES [X]

1. PROVIDE, INSTALL AND TERMINATE NEW SINGLEMODE FO CABLE. REPLACE ALL EXISTING MULTIMODE TERMINATIONS.
2. REPLACE EXISING MULTIMODE FIBER OPTIC PATCH CABLES IN KIND WITH NEW SINGLEMODE FIBER OPTIC PATCH CABLES AND CONNECTORS. COORDINATE CONNECTOR TYPES WITH ETHERNET SWITCH AND PATH PANEL.
3. INSTALL NEW BELDEN DIN RAIL MOUNT MODULAR PATCH PANEL OR APPROVED EQUAL. COORDINATE CONNECTOR TYPES WITH PATCH CABLES.
4. PROVIDE AND INSTALL NEW WALL MOUNT FIBER OPTIC PATCH PANEL IN A NEMA 12 ENCLOSURE. PATH PANEL AND ENCLOSURE TO BE SIZED TO ACCEPT A MINIMUM OF 24 FIBER TERMINATIONS.
5. PROVIDE, INSTALL AND CONFIGURE NEW CISCO IE3000-8TC NETWORK SWITCH WITH A IEM-3000-8TM (8) COPPER PORT EXPANSION MODULE.
6. PROVIDE, INSTALL AND CONFIGURE NEW CISCO IE3000-8TC NETWORK SWITCH.

EXISTING NETWORK SWITCH SCHEDULE

SW-#	LOCATION	MAKE / MODEL	FO PORTS / IN USE	RJ45 PORTS / IN USE	COMMENTS
8	PUMP AND BLOWER BUILDING #2	CISCO / IE3000-8TC	2 / 2	16 / 7	NEW SWITCH TO BE INSTALLED
9	PUMP AND BLOWER BUILDING #1	CISCO / IE3000-8TC	2 / 2	8 / 4	
10	PUMP AND BLOWER BUILDING #1 BIOLAC CP	UNMANAGED ETHERNET SWITCH	0 / 0	8 / 3	
11	IRRIGATION PUMPING STATION	CISCO / IE3000-8TC	2 / 2	8 / 6	NEW SWITCH TO BE INSTALLED
12	ELECTRICAL BUILDING 1	CISCO / IE3000-8TC	2 / 2	8 / 6	

REVISIONS

CLIENT INFORMATION

SUSSEX COUNTY, DE
ENGINEERING
DEPARTMENT

INLAND BAYS RWF
PHASE #2 EXPANSION:
CONTRACT S19-10

KEY PLAN

GRAPHIC SCALES

SIGNATURE

PATRICK WILLIAM GRACE
LICENSE NO. 10620
7/11/20
DELAWARE PROFESSIONAL ENGINEER

Whitman, Requardt & Associates, LLP
801 South Caroline Street, Baltimore, Maryland 21231

NETWORK ARCHITECTURE DIAGRAM (CONT.)

DRAWING NO.
I00.09

SCALE: AS SHOWN		
DATE: JULY 2019	SHEET 183 OF 229	
DES: JJN	DRAWN: JJN	CHECK: PWG

N:\14256-028\CADD\14256028I00-09.dwg

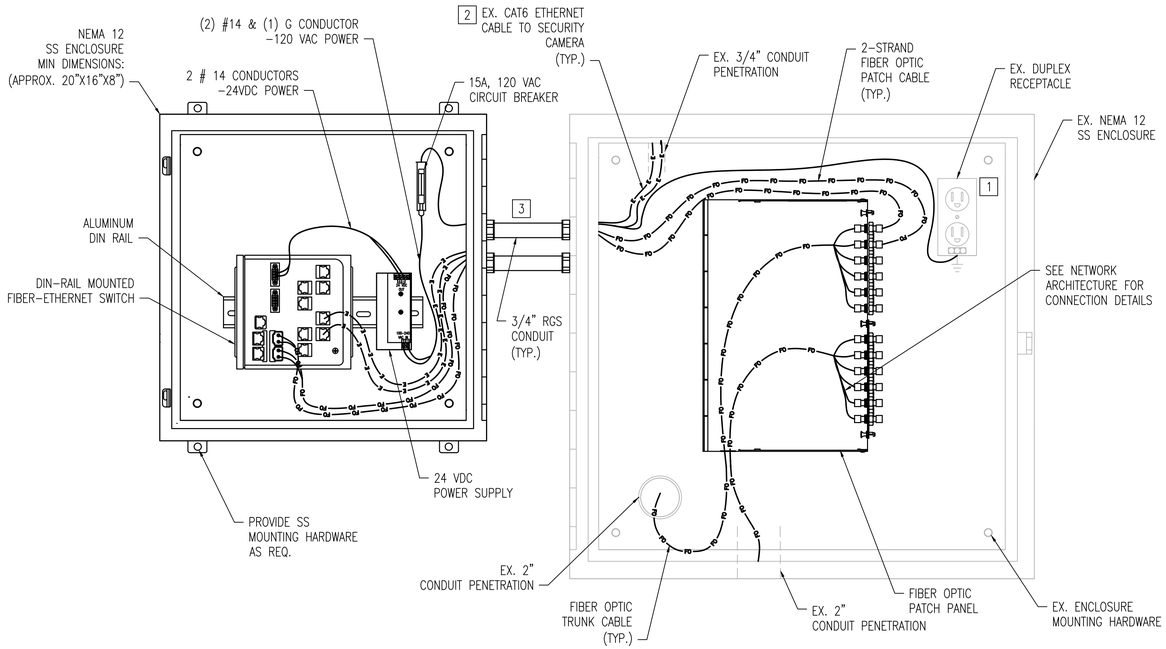

1 / I00.10 — FIBER OPTIC PATCH PANEL INSTALLATION DETAIL

(TYP. FOR FOPP-G)

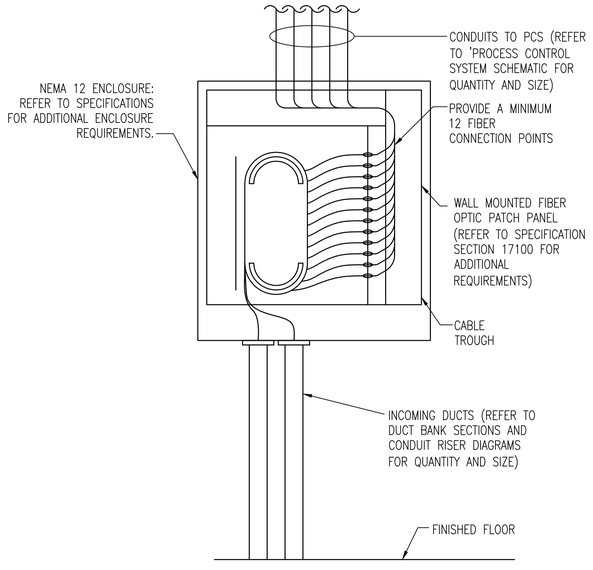

FIBER OPTIC PATCH PANEL NAMEPLATE SCHEDULE	
FIBER OPITC PATCH PANEL TAG	LOCATION
FOPP-HW	EX. ELECTRICAL BUILDING NO.1
FOPP-PB1	EX. PUMP & BLOWER BUILDING NO. 1
FOPP-SH	EX. ELECTRICAL BUILDING NO.2
FOPP-AB	EX. ADMINISTRATION BUILDING
FOPP-IPS	FILTERED IRRIGATION PUMPING STATION
FOPP-PB2	PUMP & BLOWER BUILDING NO. 2
FOPP-DB	EX. DRYER BUILDING
FOPP-DWB	EX. DEWATERING BUILDING
FOPP-G	EX. GARAGE

2 / I00.10 — FIBER OPTIC PATCH PANEL AND ENCLOSURE INSTALLATION DETAIL

NOT TO SCALE

NOTES:

1. PROVIDE TERMINATION IDENTIFICATIONS AND PANEL DIRECTORY.
2. PROVIDE FAN OUT KITS FOR MULTIPLE FIBER UNDERGROUND CABLES.

GENERAL NOTES

1. SEE I&C SYMBOLS, LEGENDS AND ABBREVIATIONS SHEET FOR DETAILS.
2. SEE NETWORK ARCHITECTURE FOR ADDITIONAL REQUIREMENTS.

X SPECIFIC NOTES

1. DEMO EX. DUPLEX RECEPTACLE. PROVIDE NEW 15A, 120 VAC CIRCUIT BREAKER.
2. PROVIDE NEW CAT6 ETHERNET CABLE FOR SECURITY CAMERAS AS REQUIRED.
3. FIBER OPTIC PATCH CABLES AND CAT6 ETHERNET SHALL BE ROUTED IN SEPARATE CONDUIT FROM 120V POWER.

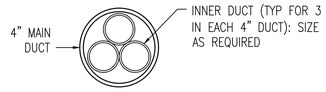

3 / I00.10 — TYPICAL FIBER OPTIC DUCT DETAIL

NOT TO SCALE

(TYP. FOR ALL FIBER OPTIC DUCTS)

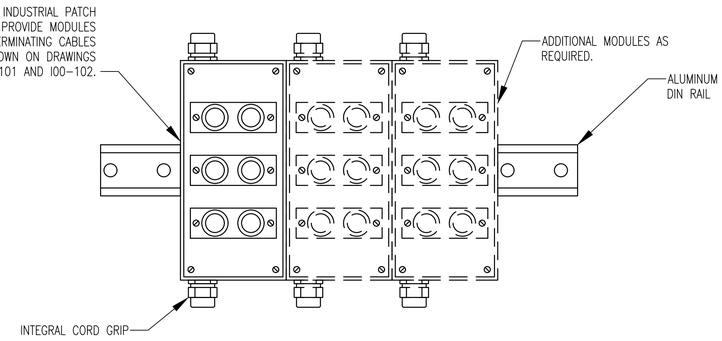

4 / I00.10 — FIBER CABLE PATCH PANEL

NOT TO SCALE

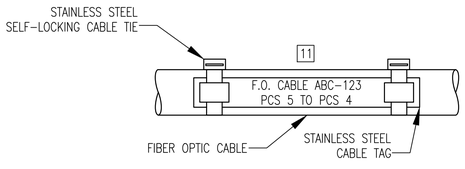

5 / I00.10 — FIBER CABLE MEDIA TAGS

NOT TO SCALE

REVISIONS		

CLIENT INFORMATION

SUSSEX COUNTY, DE ENGINEERING DEPARTMENT

INLAND BAYS RWF PHASE #2 EXPANSION: CONTRACT S19-10

KEY PLAN

GRAPHIC SCALES

SIGNATURE

PATRIC WILLIAM GAY LICENSE No. 10520 DELAWARE PROFESSIONAL ENGINEER 7/11/19

Whitman, Requardt & Associates, LLP
801 South Caroline Street, Baltimore, Maryland 21231

FIBER OPTIC DETAILS

DRAWING NO.

I00.10

SCALE: AS SHOWN		
DATE: JULY 2019	SHEET 184 OF 229	
DES: JJN	DRAWN: JJN	CHECK: PWG

N:\14256-028\CADD\1425602B100-10.dwg

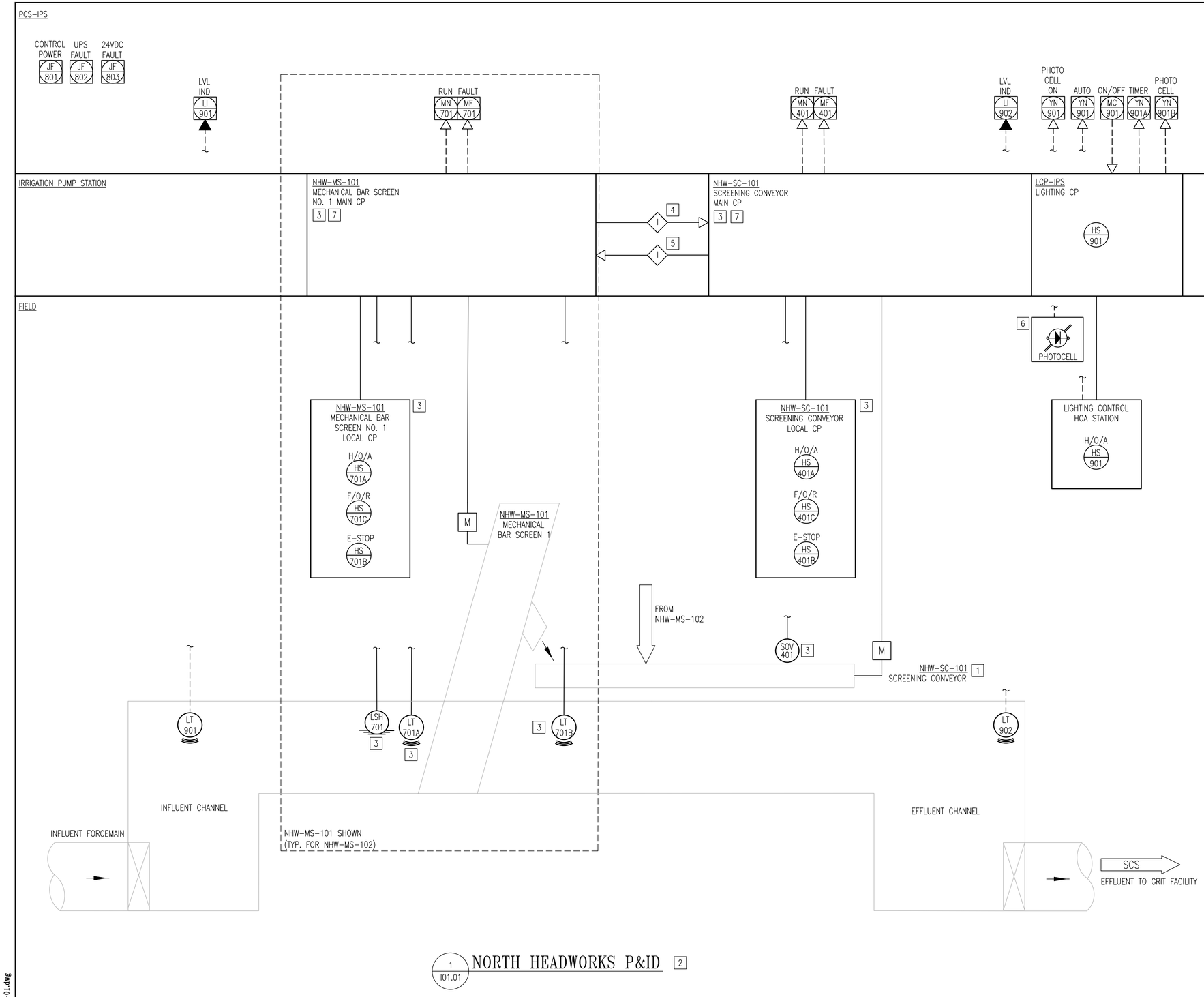

1 I01.01 NORTH HEADWORKS P&ID 2

GENERAL NOTES

1. SEE I&C SYMBOLS, LEGENDS AND ABBREVIATIONS SHEET FOR DETAILS.
2. P&ID SHOWN TO INDICATE CONTROL SYSTEM REQUIREMENTS AND DOES NOT REPRESENT A COMPLETE REFLECTION OF ALL PROCESS SYSTEM REQUIREMENTS. SEE MECHANICAL DRAWINGS FOR ADDITIONAL REQUIREMENTS.

X SPECIFIC NOTES

1. COMPACTING CONVEYOR CONNECTED TO BOTH NHW-MS-101 AND NHW-MS-102.
2. THE HEADWORKS AREA AND CHANNELS SHALL BE DESIGNATED CLASS I, GROUP D, DIVISION 2 HAZARDOUS LOCATION.
3. PROVIDED BY MANUFACTURER AND INSTALLED BY CONTRACTOR.
4. BAR SCREEN RUN STATUS TO COMPACTING CONVEYOR FOR START/STOP CONTROL.
5. TRANSPACTOR STATUS INTERLOCK TO BAR SCREEN CONTROL.
6. PHOTOCELL WALL MOUNTED OUTSIDE OF THE FILTERED IRRIGATION PUMP STATION AS INDICATED ON THE PLAN DRAWINGS.
7. CONTRACTOR TO COORDINATE TERMINATIONS OF FIELD DEVICES TO THE CONTROL PANEL WITH THE MANUFACTURER.

REVISIONS

CLIENT INFORMATION

SUSSEX COUNTY, DE
ENGINEERING DEPARTMENT

INLAND BAYS RWF
PHASE #2 EXPANSION:
CONTRACT S19-10

KEY PLAN

GRAPHIC SCALES

SIGNATURE

PADRAIC WILLIAM GRAY LICENSE No. 16620 DELAWARE PROFESSIONAL ENGINEER 7/11/2019

Whitman, Requardt & Associates, LLP
801 South Caroline Street, Baltimore, Maryland 21231

NORTH HEADWORKS
BUILDING P&ID

DRAWING NO.
I01.01

SCALE: AS SHOWN
DATE: JULY 2019 SHEET 185 OF 229
DES: JJN DRAWN: JJN CHECK: PWG

N:\14256-026\CADD\14256026I01-01.dwg

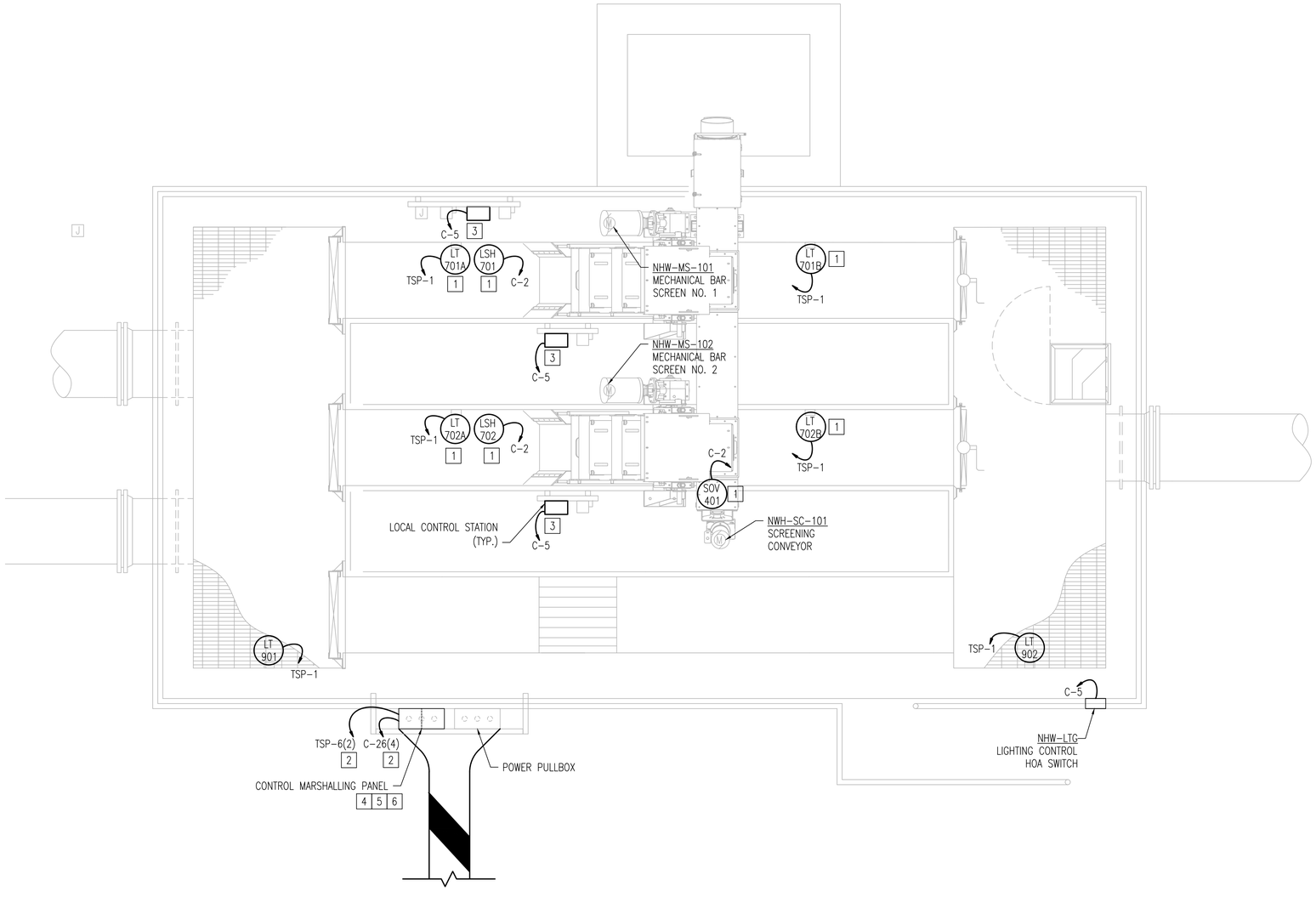

1 / I01.02 NORTH HEADWORKS PLAN
SCALE: 1/2" = 1'-0"

GENERAL NOTES

1. SEE I&C SYMBOLS, LEGENDS AND ABBREVIATIONS SHEET FOR DETAILS.
2. SEE ELECTRICAL DRAWINGS FOR ADDITIONAL INSTALLATION AND EQUIPMENT REQUIREMENTS.
3. UNLESS OTHERWISE INDICATED, ALL CONDUIT AND CONDUCTORS SHALL BE TO THE CONTROL MARSHALLING PANEL.

X SPECIFIC NOTES

1. INSTRUMENT PROVIDED BY MANUFACTURER. INSTALLATION AND CONTROL TERMINATIONS SHALL BE THE RESPONSIBILITY OF THE CONTRACTOR. REFER TO I-DRAWINGS FOR INSTALLATION DETAILS.
2. TO MARSHALLING PANEL IN IRRIGATION PUMPING STATION THROUGH CONCRETE ENCASED CONDUIT. SEE ELECTRICAL DRAWINGS AND SPECIFICATIONS FOR CONCRETE ENCASED CONDUIT DETAILS AND REQUIREMENTS.
3. CONTROL PANEL PROVIDED BY MANUFACTURER AND INSTALLED BY CONTRACTOR.
4. ANALOG AND DIGITAL CONTROL SIGNAL WIRING MUST BE ISOLATED AT A SAFE DISTANCE FROM EACH OTHER AND CROSS AT RIGHT ANGLES TO MINIMIZE INDUCTION WITHIN THE CONTROLS PULL BOX. PULL BOX MUST BE SIZED TO ACCOMMODATE THESE REQUIREMENTS.
5. ANALOG AND DIGITAL CONTROL SIGNAL WIRING MUST BE ROUTED IN SEPARATE DEDICATED CONDUITS. ANALOG SIGNAL CONDUIT SHALL BE GROUNDED TO ISOLATE AGAINST ELECTRICAL NOISE.
6. CONTROL MARSHALLING PANEL SHALL BE PROVIDED WITH TERMINAL BLOCKS FOR TERMINATION OF ALL CONDUCTORS SHOWN INCLUDING SPARES.

REVISIONS

CLIENT INFORMATION

SUSSEX COUNTY, DE
ENGINEERING DEPARTMENT

INLAND BAYS RWF
PHASE #2 EXPANSION:
CONTRACT S19-10

KEY PLAN

GRAPHIC SCALES

0 1' 2' 4'
SCALE: 1/2" = 1'-0"

SIGNATURE

PADRAIC WILLIAM RIZZI
LICENSE
No. 16620
7/11/2019
DELAWARE
PROFESSIONAL ENGINEER

WRA
Whitman, Requardt & Associates, LLP
801 South Caroline Street, Baltimore, Maryland 21231

NORTH HEADWORKS
BUILDING PLAN

DRAWING NO.
I01.02

SCALE: AS SHOWN		
DATE: JULY 2019	SHEET 186 OF 229	
DES: SKB	DRAWN: JJN	CHECK: PWG

PLOT DATE: 7/10/2019 12:51:14 PM PAGE SETUP: WRA-PDF (36X24) PLOT STYLE: WRA_2006.CTB PAPER SIZE:ARCH FULL BLEED D (36.00 X 24.00 INCHES)

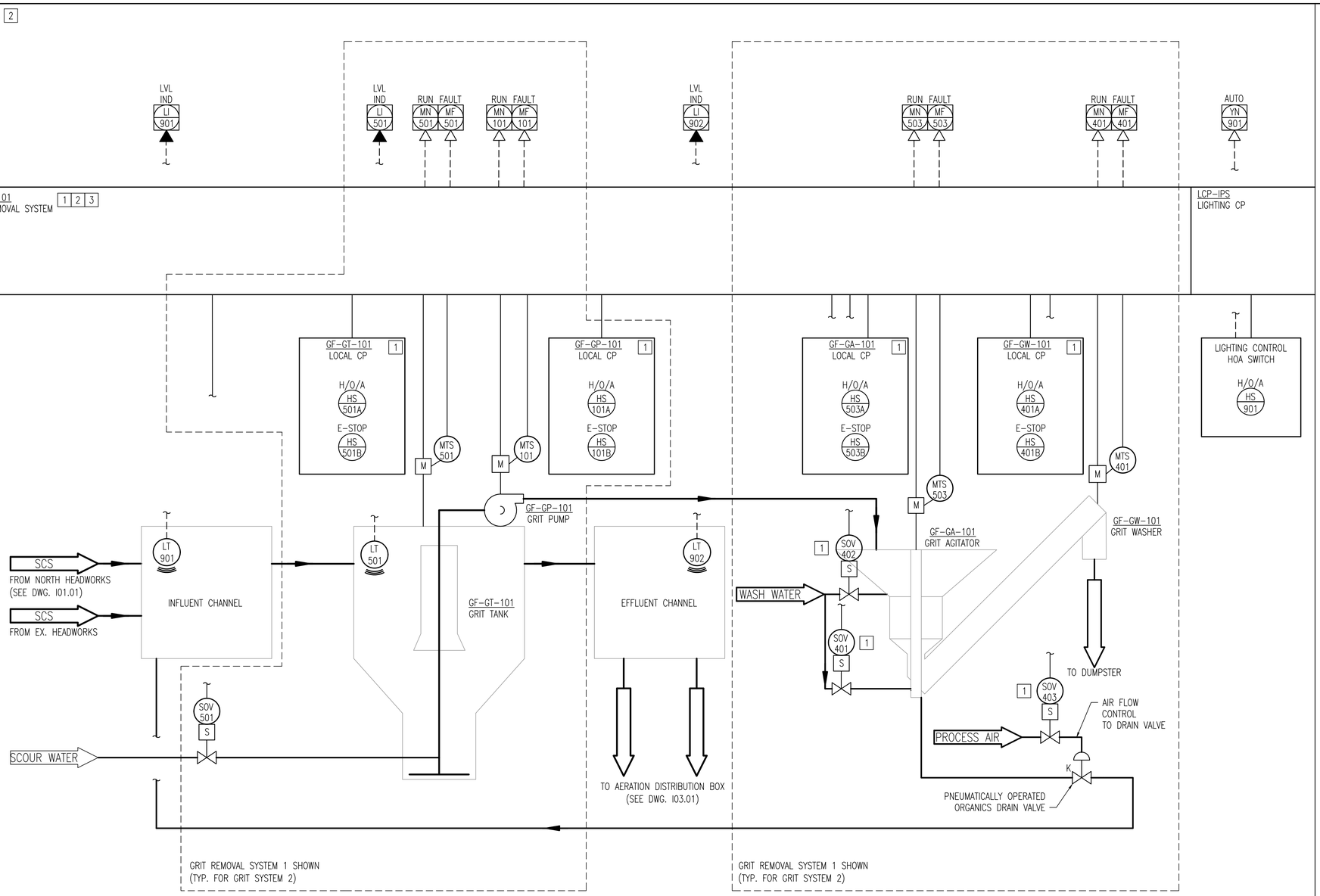

1 / I02.01 GRIT REMOVAL SYSTEM P&ID
SCALE: NONE

GENERAL NOTES

1. SEE I&C SYMBOLS, LEGENDS AND ABBREVIATIONS SHEET FOR DETAILS.
2. P&ID SHOWN TO INDICATE CONTROL SYSTEM REQUIREMENTS AND DOES NOT REPRESENT A COMPLETE REFLECTION OF ALL PROCESS SYSTEM REQUIREMENTS. SEE MECHANICAL DRAWINGS FOR ADDITIONAL REQUIREMENTS.

[X] SPECIFIC NOTES

1. CONTROL PANEL PROVIDED BY MANUFACTURER AND INSTALLED BY CONTRACTOR.
2. PCS-IPS AND GRIT REMOVAL CONTROL PANEL LOCATED IN IRRIGATION PUMPING STATION.
3. CONTRACTOR TO COORDINATE TERMINATIONS OF FIELD DEVICES TO THE CONTROL PANEL WITH THE MANUFACTURER.

REVISIONS		

CLIENT INFORMATION

SUSSEX COUNTY, DE
ENGINEERING DEPARTMENT

INLAND BAYS RWF
PHASE #2 EXPANSION:
CONTRACT S19-10

KEY PLAN

GRAPHIC SCALES

SIGNATURE



Whitman, Requardt & Associates, LLP
801 South Caroline Street, Baltimore, Maryland 21231

GRIT REMOVAL SYSTEM P&ID

DRAWING NO.

I02.01

SCALE: AS SHOWN		
DATE: JULY 2019	SHEET 187 OF 229	
DES: JJN	DRAWN: JJN	CHECK: PWG

N:\14256-026\CADD\14256026I02-01.dwg

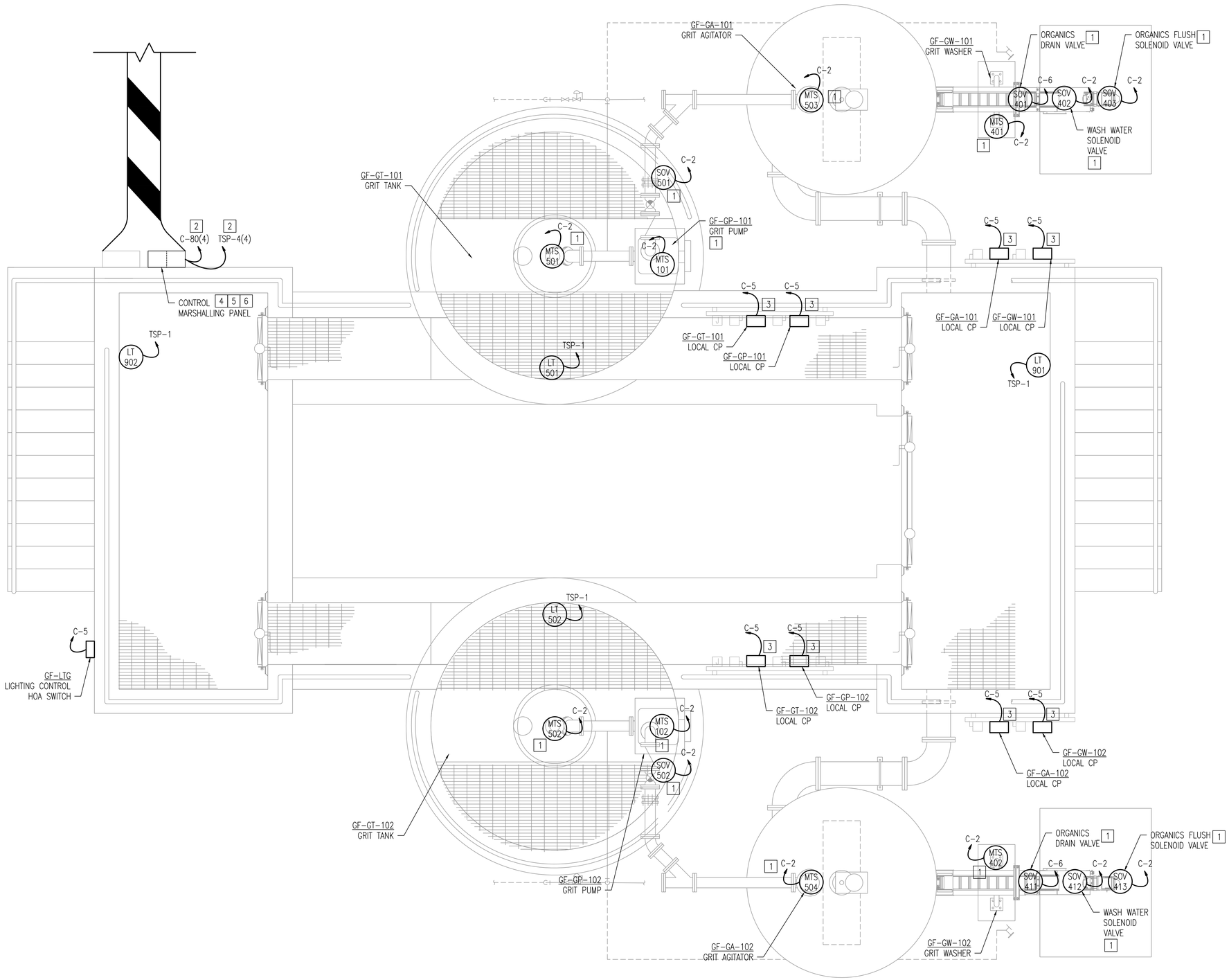

1 / I02.02 GRIT REMOVAL SYSTEM PLAN
SCALE: 1/2" = 1'-0"

GENERAL NOTES

1. SEE I&C SYMBOLS, LEGENDS AND ABBREVIATIONS SHEET FOR DETAILS.
2. SEE ELECTRICAL DRAWINGS FOR ADDITIONAL INSTALLATION AND EQUIPMENT REQUIREMENTS.
3. UNLESS OTHERWISE INDICATED, ALL CONDUIT AND CONDUCTORS SHALL BE TO THE CONTROL MARSHALLING PANEL.

[X] SPECIFIC NOTES

1. INSTRUMENT PROVIDED BY MANUFACTURER. INSTALLATION AND CONTROL TERMINATIONS SHALL BE THE RESPONSIBILITY OF THE CONTRACTOR.
2. TO MARSHALLING PANEL IN IRRIGATION PUMPING STATION THROUGH CONCRETE ENCASED CONDUIT. SEE ELECTRICAL DRAWINGS AND SPECIFICATIONS FOR CONCRETE ENCASED CONDUIT DETAILS AND REQUIREMENTS.
3. LOCAL CONTROL STATION PROVIDED BY MANUFACTURER AND INSTALLED BY CONTRACTOR.
4. ANALOG AND DIGITAL CONTROL SIGNAL WIRING MUST BE ISOLATED AT A SAFE DISTANCE FROM EACH OTHER AND CROSS AT RIGHT ANGLES TO MINIMIZE INDUCTION WITHIN THE CONTROLS PULL BOX. PULL BOX MUST BE SIZED TO ACCOMMODATE THESE REQUIREMENTS.
5. ANALOG AND DIGITAL CONTROL SIGNAL WIRING MUST BE ROUTED IN SEPARATE DEDICATED CONDUITS. ANALOG SIGNAL CONDUIT SHALL BE GROUNDED TO ISOLATE AGAINST ELECTRICAL NOISE.
6. CONTROL MARSHALLING PANEL SHALL BE PROVIDED WITH TERMINAL BLOCKS FOR THE TERMINATION OF ALL CONDUCTORS SHOWN INCLUDING SPARES.

REVISIONS		

CLIENT INFORMATION

SUSSEX COUNTY, DE
ENGINEERING
DEPARTMENT

INLAND BAYS RWF
PHASE #2 EXPANSION:
CONTRACT S19-10

KEY PLAN

GRAPHIC SCALES

0 1' 2' 4'
SCALE: 1/2" = 1'-0"

SIGNATURE

PEDRO WILLIAM GUERRERO
LICENSE
No. 10620
7/11/19
DELAWARE
PROFESSIONAL ENGINEER

Whitman, Requardt & Associates, LLP
801 South Caroline Street, Baltimore, Maryland 21231

GRIT REMOVAL
SYSTEM PLAN

DRAWING NO.

I02.02

SCALE: AS SHOWN		
DATE: JULY 2019		SHEET 188 OF 229
DES: JJN	DRAWN: JJN	CHECK: PWG

PLOT DATE: 7/10/2019 12:52:50 PM PAGE SETUP: WRA-PDF (36X24) PLOT STYLE: WRA_2006.CTB PAPER SIZE:ARCH FULL BLEED D (36.00 X 24.00 INCHES)
XX:\AM\PROJ\1028.001\DWG\WRA1028001I102-02.dwg

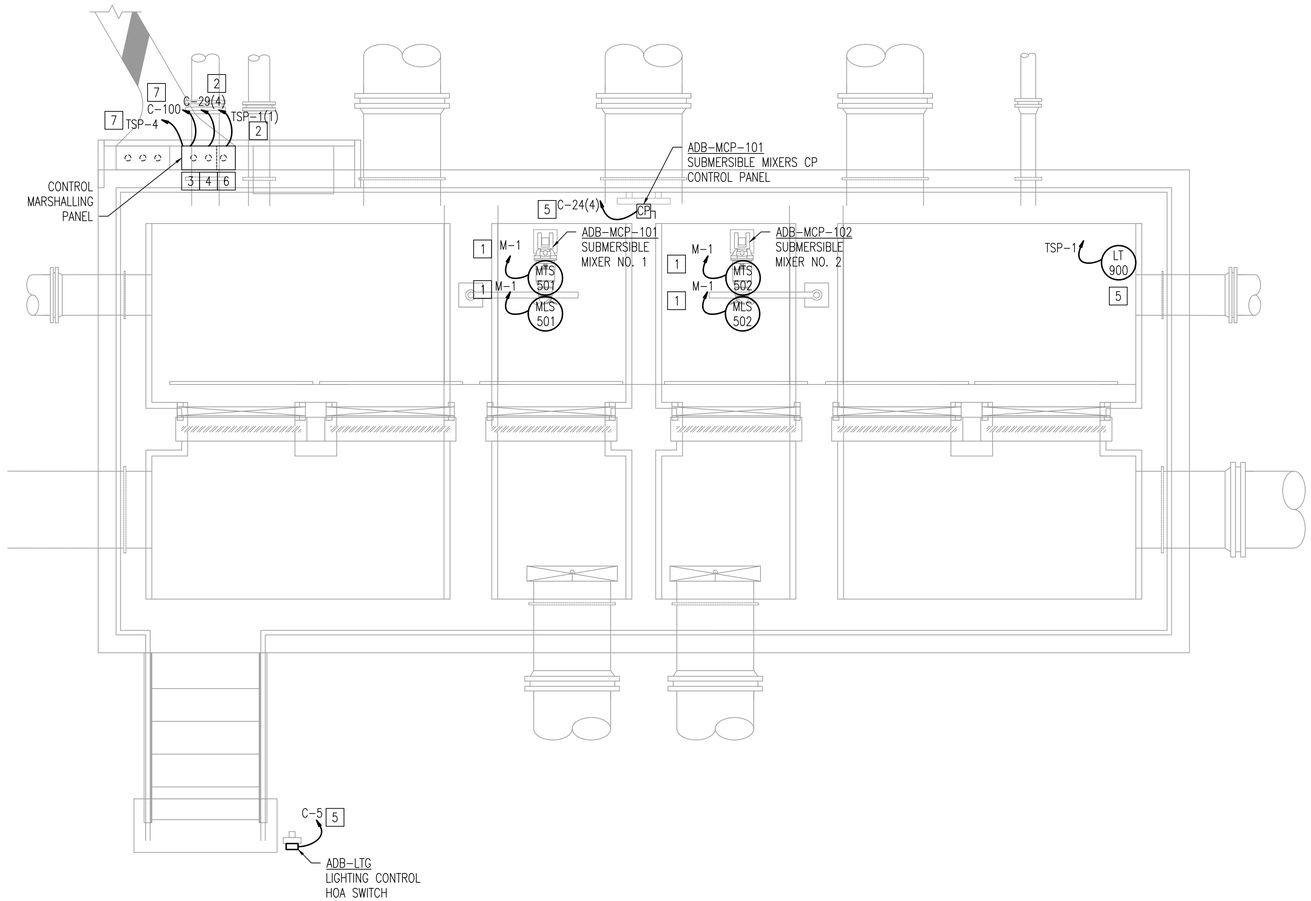

1 / I03.02 AERATION LAGOON DISTRIBUTION BOX PLAN
SCALE: 1/2"=1'-0"

GENERAL NOTES

1. SEE I&C SYMBOLS, LEGENDS AND ABBREVIATIONS SHEET FOR DETAILS.
2. SEE ELECTRICAL DRAWINGS FOR ADDITIONAL INSTALLATION AND EQUIPMENT REQUIREMENTS.

[X] SPECIFIC NOTES

1. MANUFACTURER PROVIDED CABLE TO MOTOR MONITORING RELAY IN SUBMERSIBLE MIXERS CONTROL PANEL.
2. TO CONTROLS PULLBOX IN EX. PUMP & BLOWER BUILDING NO. 1 THROUGH CONCRETE ENCASED CONDUIT. SEE ELECTRICAL DRAWINGS AND SPECIFICATIONS FOR CONCRETE ENCASED CONDUIT DETAILS AND REQUIREMENTS.
3. ANALOG AND DIGITAL CONTROL SIGNAL WIRING MUST BE ISOLATED AT A SAFE DISTANCE FROM EACH OTHER AND CROSS AT RIGHT ANGLES TO MINIMIZE INDUCTION WITHIN THE CONTROLS PULL BOX. PULL BOX MUST BE SIZED TO ACCOMMODATE THESE REQUIREMENTS.
4. ANALOG AND DIGITAL CONTROL SIGNAL WIRING MUST BE ROUTED IN SEPARATE DEDICATED CONDUITS. ANALOG SIGNAL CONDUIT SHALL BE GROUNDED TO ISOLATE AGAINST ELECTRICAL NOISE.
5. TERMINATE ALL CONDUIT AND CONDUCTORS AT THE CONTROL MARSHALLING PANEL.
6. CONTROL MARSHALLING PANEL SHALL BE PROVIDED WITH TERMINAL BLOCKS FOR TERMINATION OF ALL CONDUCTORS SHOWN INCLUDING SPARES.
7. TO BIOLAC RIO PANEL IN EX. PUMP & BLOWER BUILDING NO. 1.

REVISIONS		

CLIENT INFORMATION

SUSSEX COUNTY, DE
ENGINEERING
DEPARTMENT

INLAND BAYS RWF
PHASE #2 EXPANSION:
CONTRACT S19-10

KEY PLAN

GRAPHIC SCALES

0 1' 2' 4'
SCALE: 1/2" = 1'-0"

SIGNATURE

PEDRO WILLIAM GIL
LICENSE
No. 10620
7/10/19
DELAWARE
PROFESSIONAL ENGINEER

Whitman, Requardt & Associates, LLP
801 South Caroline Street, Baltimore, Maryland 21231

AERATION LAGOON
DISTRIBUTION BOX PLAN

DRAWING NO.

I03.02

SCALE: AS SHOWN		
DATE: JULY 2019		SHEET 190 OF 229
DES: GAH	DRAWN: JJN	CHECK: PWG

PLOT DATE: 7/10/2019 12:51:25 PM PAGE SETUP: WRA-PDF C36(24) PLOT STYLE: WRA_2006CTB PAPER SIZE:ARCH FULL BLEED D (36.00 X 24.00 INCHES)

GENERAL NOTES

1. SEE I&C SYMBOLS, LEGENDS AND ABBREVIATIONS SHEET FOR DETAILS.

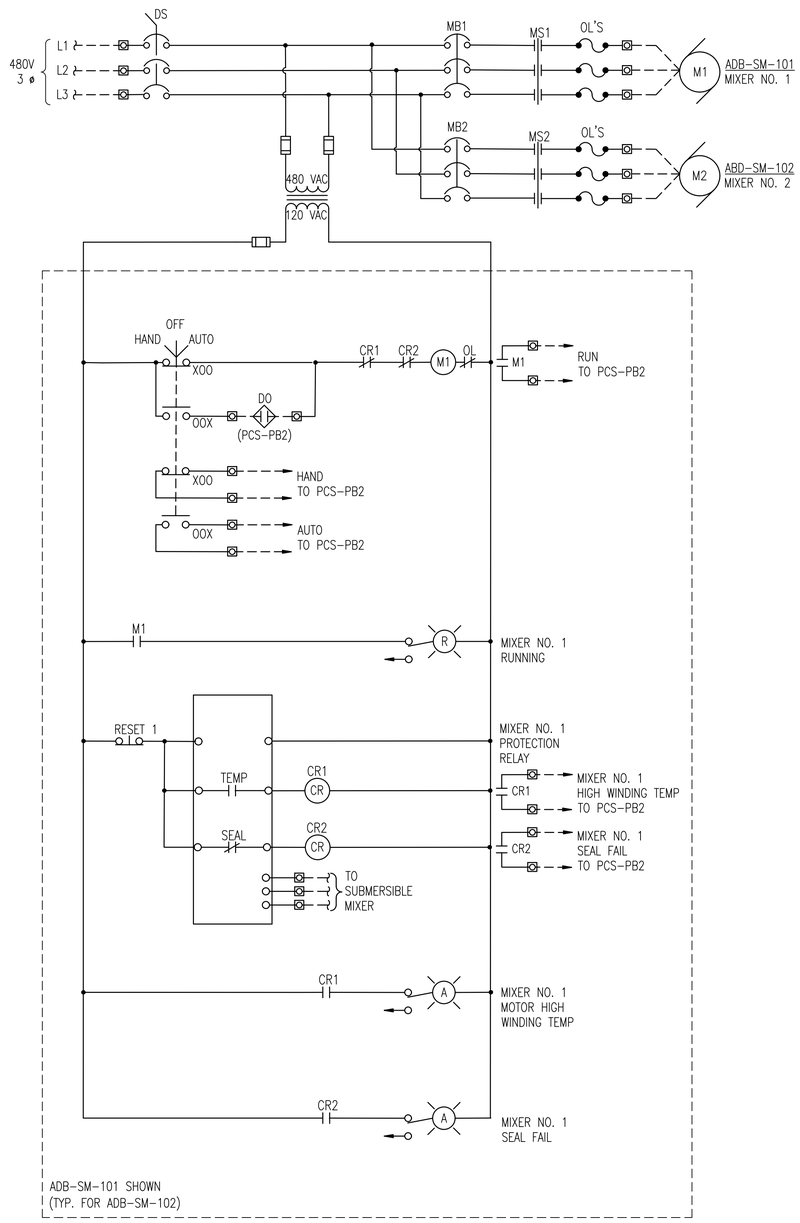

1 / I03.03 SUBMERSIBLE MIXERS ELEMENTARY CONTROL DIAGRAM

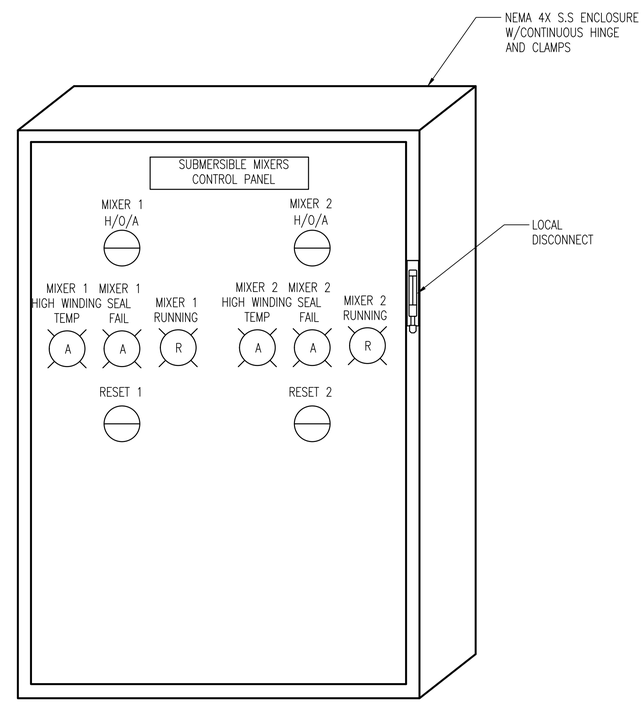

2 / I03.03 SUBMERSIBLE MIXERS CONTROL PANEL ELEVATION

REVISIONS

CLIENT INFORMATION

SUSSEX COUNTY, DE
ENGINEERING
DEPARTMENT

INLAND BAYS RWF
PHASE #2 EXPANSION:
CONTRACT S19-10

KEY PLAN

GRAPHIC SCALES

SIGNATURE



Whitman, Requardt & Associates, LLP
801 South Caroline Street, Baltimore, Maryland 21231

SUBMERSIBLE MIXER
CONTROL DIAGRAMS

DRAWING NO.

I03.03

SCALE: AS SHOWN		
DATE: JULY 2019	SHEET 191 OF 229	
DES: JJN	DRAWN: JJN	CHECK: PWG

N:\14256-026\CADD\14256026I03-03.dwg

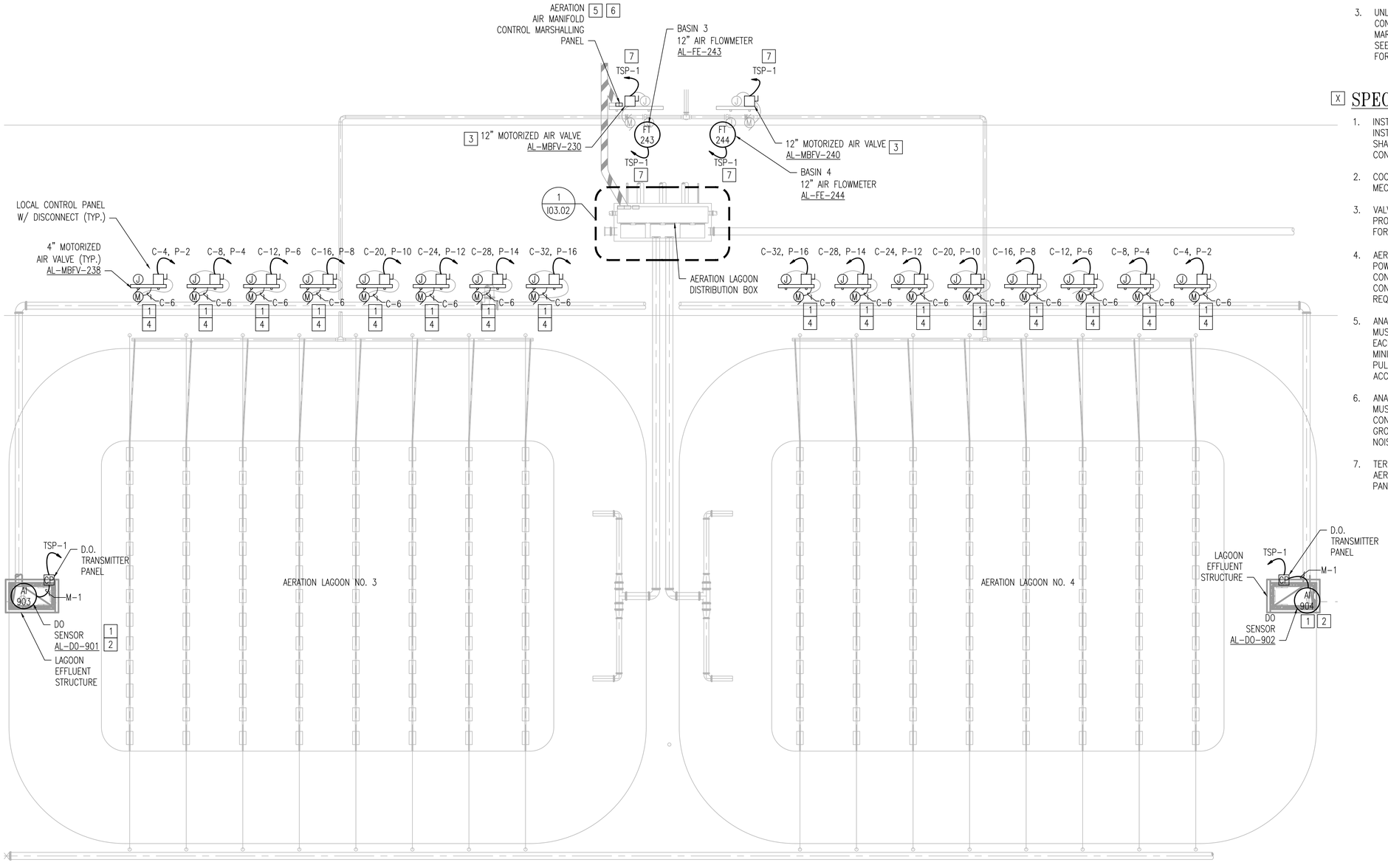

1 I04.02 AERATION LAGOON 3&4 PLAN
SCALE: 1/16" = 1'-0"

GENERAL NOTES

1. SEE I&C SYMBOLS, LEGENDS AND ABBREVIATIONS SHEET FOR DETAILS.
2. SEE ELECTRICAL DRAWINGS FOR ADDITIONAL INSTALLATION AND EQUIPMENT REQUIREMENTS.
3. UNLESS OTHERWISE INDICATED, ALL CONDUIT AND CONDUCTOR SHALL BE TERMINATED AT CONTROL MARSHALLING PANEL AT DISTRIBUTION BOX. SEE AERATION LAGOON DISTRIBUTION BOX PLAN FOR DETAILS.

X SPECIFIC NOTES

1. INSTRUMENT PROVIDED BY MANUFACTURER. INSTALLATION AND CONTROL TERMINATIONS SHALL BE THE RESPONSIBILITY OF THE CONTRACTOR.
2. COORDINATE INSTALLATION OF DO PROBE WITH MECHANICAL DRAWINGS.
3. VALVE ACTUATOR LOCAL CONTROL PANEL PROVIDED BY MANUFACTURER. SEE I-DRAWINGS FOR DETAILS.
4. AERATION LAGOON 4" VALVE CONTROL AND POWER WIRING IS DAISY CHAINED TOGETHER VIA CONDUIT AND JUNCTION BOXES. SIZE CONDUITS ACCORDINGLY FOR FILL REQUIREMENTS.
5. ANALOG AND DIGITAL CONTROL SIGNAL WIRING MUST BE ISOLATED AT A SAFE DISTANCE FROM EACH OTHER AND CROSS AT RIGHT ANGLES TO MINIMIZE INDUCTION WITHIN THE CONTROLS PULL BOX. PULL BOX MUST BE SIZED TO ACCOMMODATE THESE REQUIREMENTS.
6. ANALOG AND DIGITAL CONTROL SIGNAL WIRING MUST BE ROUTED IN SEPARATE DEDICATED CONDUITS. ANALOG SIGNAL CONDUIT SHALL BE GROUNDED TO ISOLATE AGAINST ELECTRICAL NOISE.
7. TERMINATE CONDUIT AND CONDUCTORS AT AERATION AIR MANIFOLD CONTROL MARSHALLING PANEL.

REVISIONS

CLIENT INFORMATION

SUSSEX COUNTY, DE
ENGINEERING
DEPARTMENT

INLAND BAYS RWF
PHASE #2 EXPANSION:
CONTRACT S19-10

KEY PLAN

GRAPHIC SCALES

0 8' 16' 32'
SCALE: 1/16" = 1'-0"

SIGNATURE

PADRAIC WILLIAM SRA LICENSE No. 16620 7/11/2019 DELAWARE PROFESSIONAL ENGINEER

WRA
Whitman, Requardt & Associates, LLP
801 South Caroline Street, Baltimore, Maryland 21231

AERATION LAGOON 3 AND 4 PLAN

DRAWING NO.
I04.02

SCALE: AS SHOWN		
DATE: JULY 2019	SHEET 193 OF 229	
DES: SKB	DRAWN: SKB	CHECK: PWG

N:\14256-026\CADD\14256026I04-02.dwg

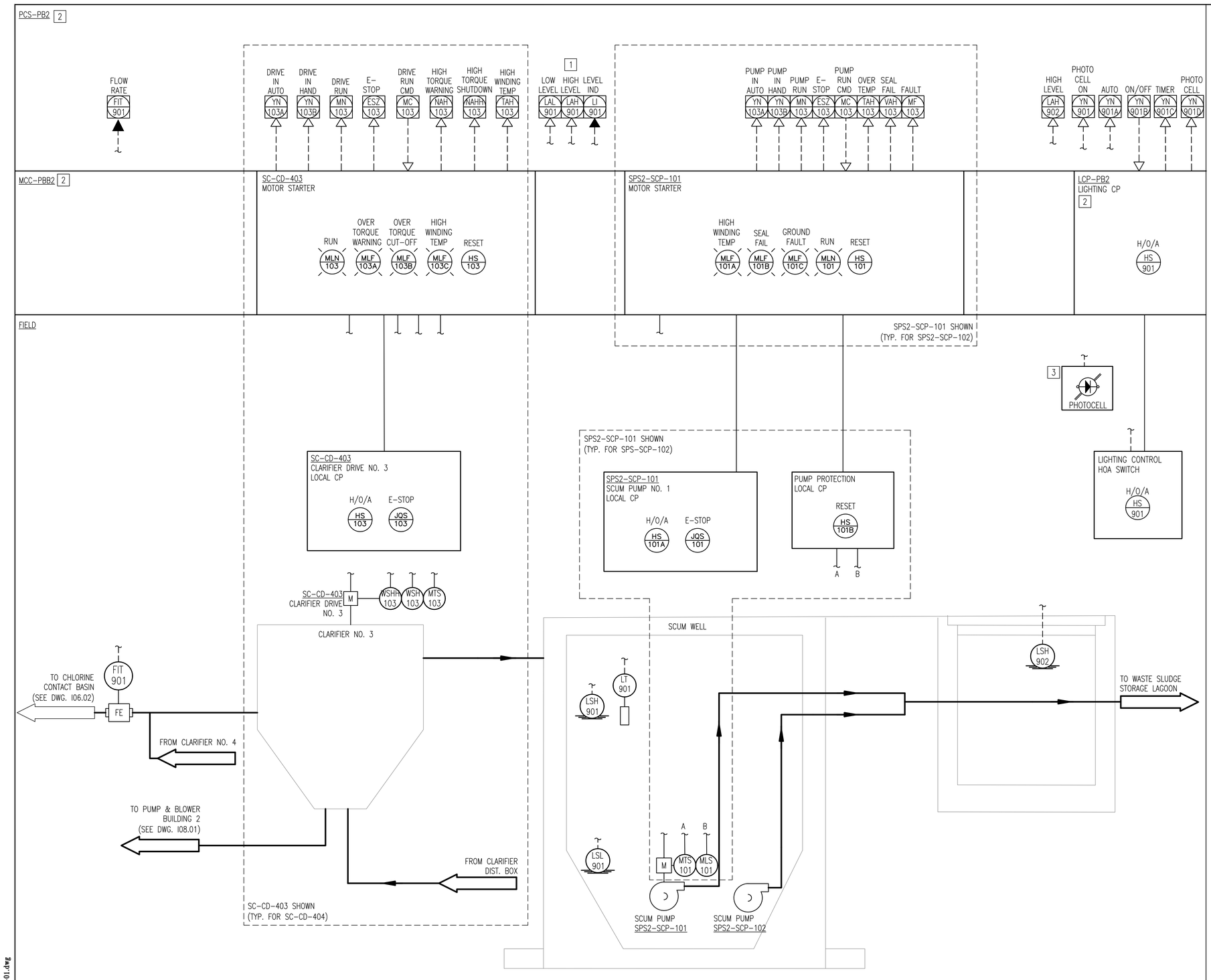

1 I06.01 CLARIFIER DRIVE & SCUM WELL P&ID
SCALE: NONE

GENERAL NOTES

1. SEE I&C SYMBOLS, LEGENDS AND ABBREVIATIONS SHEET FOR DETAILS.
2. P&ID SHOWN TO INDICATE CONTROL SYSTEM REQUIREMENTS AND DOES NOT REPRESENT A COMPLETE REFLECTION OF ALL PROCESS SYSTEM REQUIREMENTS. SEE MECHANICAL DRAWINGS FOR ADDITIONAL REQUIREMENTS.

X SPECIFIC NOTES

1. SCUM WELL FLOAT CONTROL TO BE HARDWIRED TO SCUM PUMP NO. 1 & 2 CONTROL CIRCUIT AS SHOWN ON I00.04.
2. LOCATED IN PUMP AND BLOWER BUILDING NO. 2.
3. PHOTOCELL WALL WOUNTED OUTSIDE OF THE PUMP AND BLOWER BUILDING 2 AS INDICATED ON THE PLAN DRAWINGS.

REVISIONS

CLIENT INFORMATION

SUSSEX COUNTY, DE
ENGINEERING DEPARTMENT

INLAND BAYS RWF
PHASE #2 EXPANSION:
CONTRACT S19-10

KEY PLAN

GRAPHIC SCALES

SIGNATURE

PADRAIC WILLIAM GRAY LICENSE No. 16620 DELAWARE PROFESSIONAL ENGINEER

Whitman, Requardt & Associates, LLP
801 South Caroline Street, Baltimore, Maryland 21231

CLARIFIERS & SCUM PUMPING STATION P&ID

DRAWING NO.
I06.01

SCALE: AS SHOWN
DATE: JULY 2019 SHEET 194 OF 229
DES: JJN DRAWN: JJN CHECK: PWG

N:\14256-026\CADD\14256026I06-01.dwg

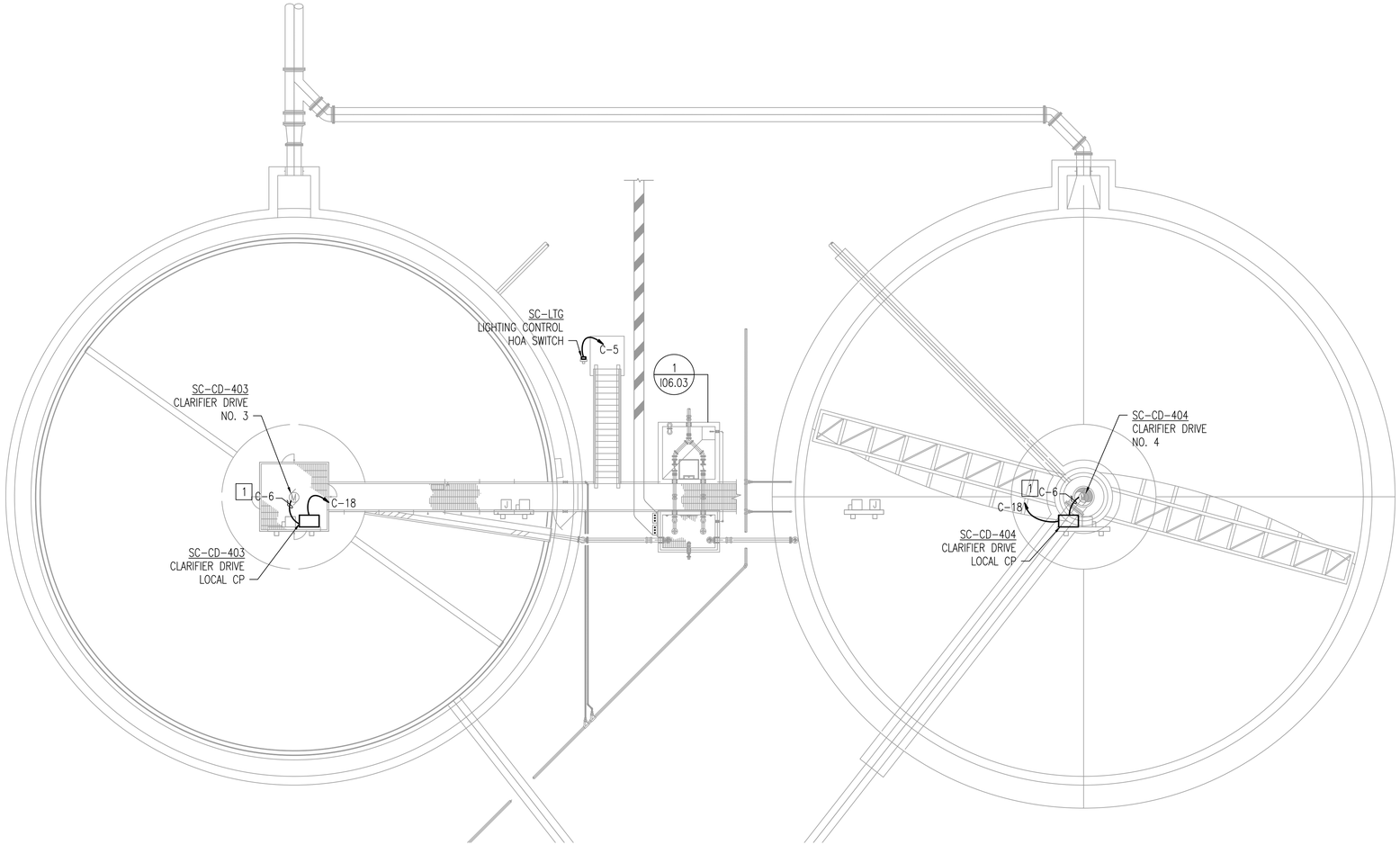

1 / I06.02 CLARIFIERS PLAN
SCALE: 1/8" = 1'

GENERAL NOTES

1. SEE I&C SYMBOLS, LEGENDS AND ABBREVIATIONS SHEET FOR DETAILS.
2. SEE ELECTRICAL DRAWINGS FOR ADDITIONAL INSTALLATION AND EQUIPMENT REQUIREMENTS.
3. UNLESS OTHERWISE INDICATED, ALL CONDUIT AND CONDUCTOR SHALL BE TERMINATED AT INSTRUMENTATION CONTROL MARSHALLING PANEL.

X SPECIFIC NOTES

1. INSTALL CONDUIT AND WIRE FOR MOTOR TEMPERATURE AND HIGH TORQUE SWITCHES TO THE LOCAL CONTROL PANEL.

REVISIONS

CLIENT INFORMATION

SUSSEX COUNTY, DE
ENGINEERING
DEPARTMENT

INLAND BAYS RWF
PHASE #2 EXPANSION:
CONTRACT S19-10

KEY PLAN

GRAPHIC SCALES

0 4' 8' 16'
SCALE: 1/8" = 1'-0"

SIGNATURE

PADRAC WILLIAM GAH
LICENSE
No. 16620
7/11/2019
DELAWARE
PROFESSIONAL ENGINEER

WRA
Whitman, Requardt & Associates, LLP
801 South Caroline Street, Baltimore, Maryland 21231

CLARIFIERS PLAN

DRAWING NO.

I06.02

SCALE: AS SHOWN		
DATE: JULY 2019	SHEET 195 OF 229	
DES: GAH	DRAWN: JJN	CHECK: PWG

PLOT DATE: 7/10/2019 12:51:41 PM PAGE SETUP: WRA-PDF (36X24) PLOT STYLE: WRA_2006.CTB PAPER SIZEARCH FULL BLEED D (36.00 X 24.00 INCHES)

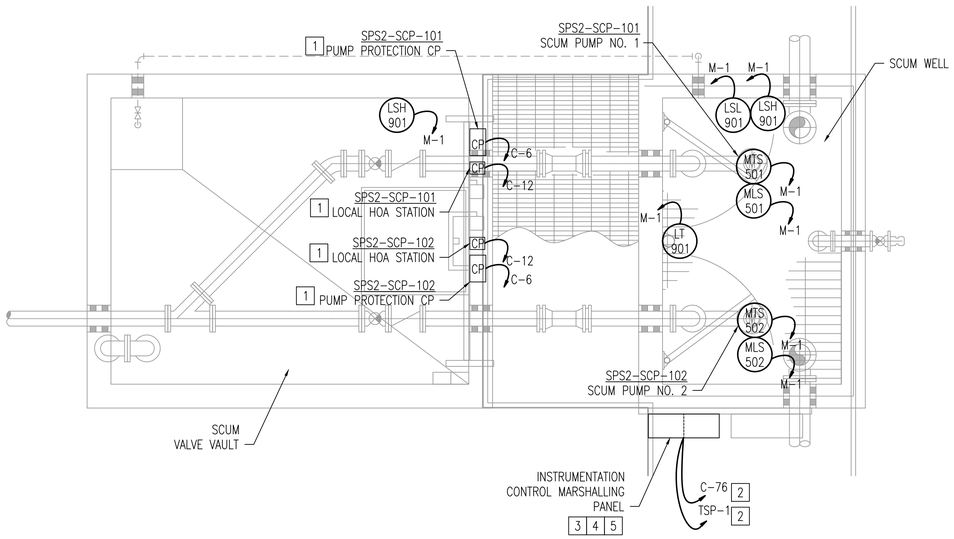

1 / I06.03 SCUM PUMPING STATION PLAN

SCALE: 1/2"=1'-0"

GENERAL NOTES

1. SEE I&C SYMBOLS, LEGENDS, AND ABBREVIATIONS SHEET FOR DETAILS.
2. SEE ELECTRICAL DRWAINGS FOR ADDITIONAL INSTALLATION AND EQUIPMENT REQUIREMENTS.
3. UNLESS OTHERWISE INDICATED, ALL CONDUIT AND CONDUCTOR SHALL BE TERMINATED AT INSTRUMENTATION CONTROL MARSHALLING PANEL. SEE E-DRAWINGS AND I-DRAWINGS FOR DETAILS.

[X] SPECIFIC NOTES

1. CONTROL PANELS SHALL BE MOUNTED TO THE HANDRAIL ON THE SECONDARY CLARIFIER ACCESS BRIDGE.
2. TO PANEL, PCS-PB2, IN PUMP AND BLOWER BUILDING 2 THROUGH CONCRETE ENCASED CONDUIT.
3. ANALOG AND DIGITAL CONTROL SIGNAL WIRING MUST BE ISOLATED AT A SAFE DISTANCE FROM EACH OTHER AND CROSS AT RIGHT ANGLES TO MINIMIZE INDUCTION WITHIN THE CONTROLS PULL BOX. PULL BOX MUST BE SIZED TO ACCOMMODATE THESE REQUIREMENTS.
4. ANALOG AND DIGITAL CONTROL SIGNAL WIRING MUST BE ROUTED IN SEPARATE DEDICATED CONDUITS. ANALOG SIGNAL CONDUIT SHALL BE GROUNDED TO ISOLATE AGAINST ELECTRICAL NOISE.
5. CONTROL MARSHALLING PANEL SHALL BE PROVIDED WITH TERMINAL BLOCK FOR TERMINATION OF ALL CONDUCTOR SHOWN INCLUDING SPARES.

REVISIONS

CLIENT INFORMATION

SUSSEX COUNTY, DE
ENGINEERING
DEPARTMENT

INLAND BAYS RWF
PHASE #2 EXPANSION:
CONTRACT S19-10

KEY PLAN

GRAPHIC SCALES

0 1' 2' 4'

SCALE: 1/2" = 1'-0"

SIGNATURE



Whitman, Requardt & Associates, LLP
801 South Caroline Street, Baltimore, Maryland 21231

SCUM PUMPING STATION PLAN

DRAWING NO.

I06.03

SCALE: AS SHOWN		
DATE: JULY 2019		SHEET 196 OF 229
DES: SKB	DRAWN: SKB	CHECK: PWG

PLOT DATE: 7/10/2019 12:51:43 PM PAGE SETUP: WRA-PDF C60X24> PLOT STYLE: WRA_2006.CTB PAPER SIZE:ANSI FULL BLEED D (36.00 X 24.00 INCHES)
N:\Projects\1050\0200\CADD\Arch\250200106-I06.03.dwg
PLOTTED BY: Kevin Bowers

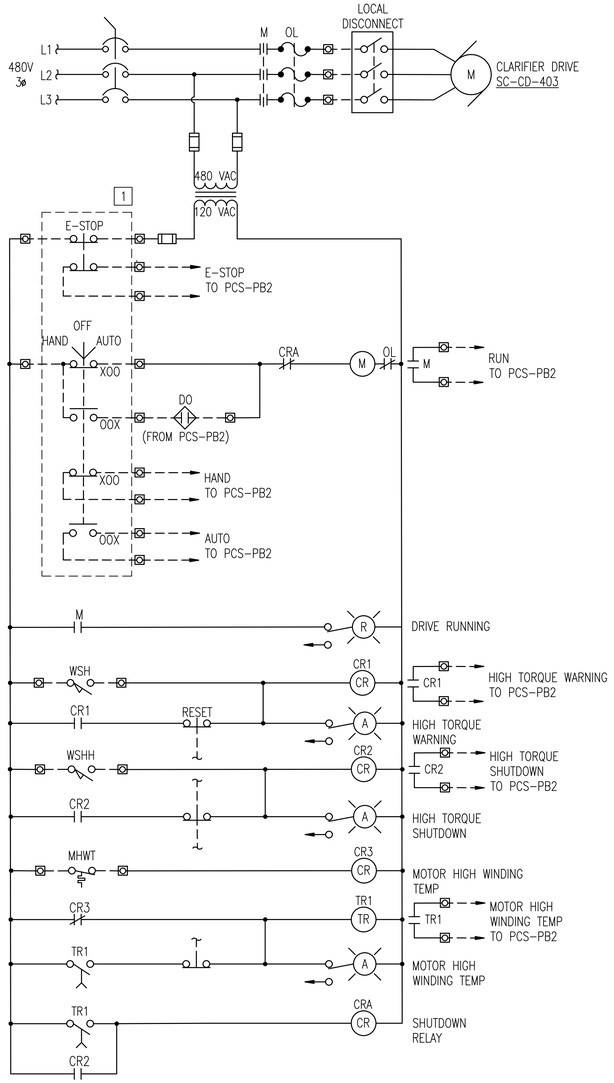

SECONDARY CLARIFIER
ELEMENTARY CONTROL DIAGRAM

1 / I06.04

(SC-CD-403 SHOWN, TYP. FOR SC-CD-404)

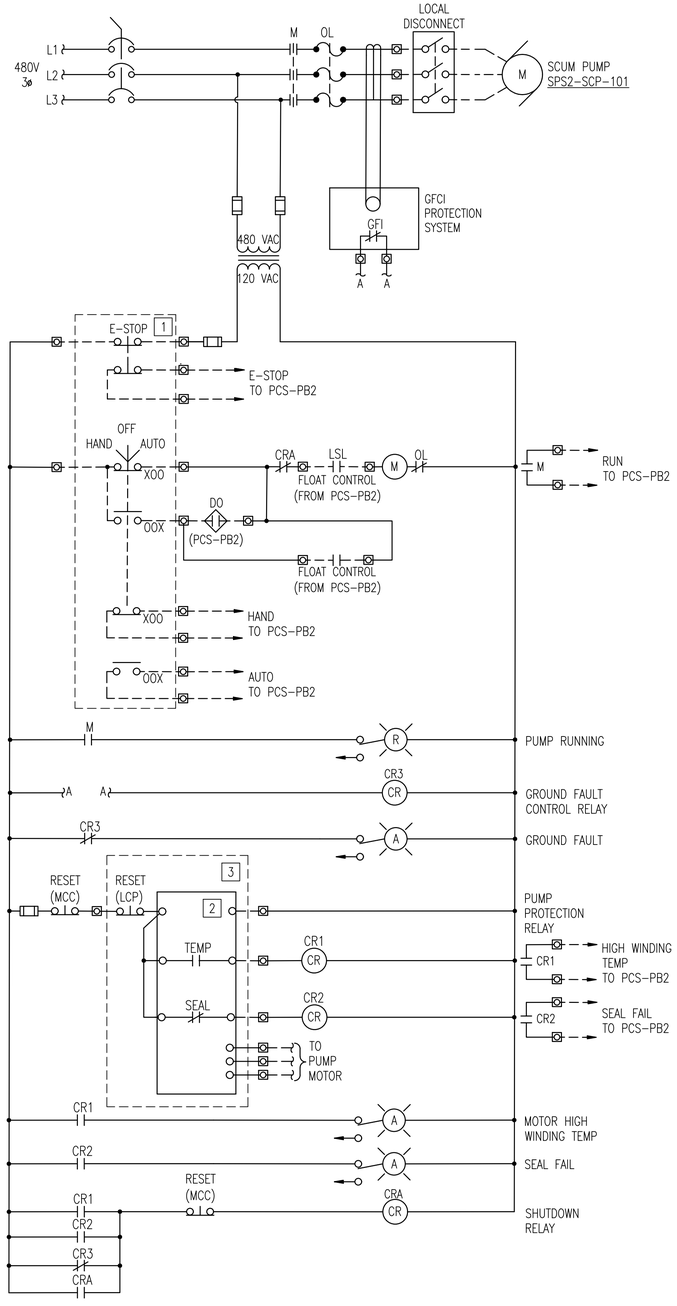

SCUM PUMP
ELEMENTARY CONTROL DIAGRAM

2 / I06.04

(SPS2-SCP-101 SHOWN, TYP. FOR SPS2-SCP-102)

GENERAL NOTES

1. SEE I&C SYMBOLS, LEGENDS AND ABBREVIATIONS SHEET FOR DETAILS.

[X] SPECIFIC NOTES

1. LOCAL CONTROL PANEL. SEE I-DRAWINGS FOR ADDITIONAL DETAILS.
2. PUMP PROTECTION RELAY PROVIDED BY PUMP MANUFACTURER. COORDINATE INSTALLATION AND CONTROL REQUIREMENTS WITH MANUFACTURER.
3. EQUIPMENT, DEVICES, AND WIRING LOCATED IN/ON THE PUMP PROTECTION PANEL. SEE I-DRAWINGS FOR ADDITIONAL DETAILS.

REVISIONS		

CLIENT INFORMATION

SUSSEX COUNTY, DE
ENGINEERING
DEPARTMENT

INLAND BAYS RWF
PHASE #2 EXPANSION:
CONTRACT S19-10

KEY PLAN

GRAPHIC SCALES

SIGNATURE



Whitman, Requardt & Associates, LLP
801 South Caroline Street, Baltimore, Maryland 21231

CLARIFIERS & SCUM PUMPING
STATION CONTROL DIAGRAMS

DRAWING NO.

I06.04

SCALE: AS SHOWN		
DATE: JULY 2019	SHEET 197 OF 229	
DES: JJN	DRAWN: JJN	CHECK: PWG

N:\14256-028\CADD\1425602B106-04.dwg

GENERAL NOTES

1. SEE I&C SYMBOLS, LEGENDS AND ABBREVIATIONS SHEET FOR DETAILS.

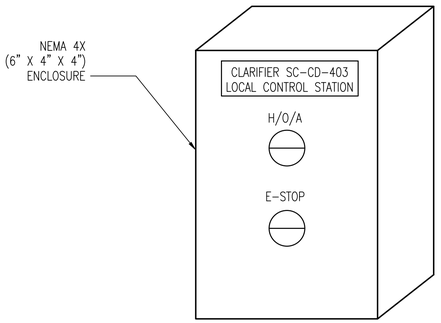

1 / I06.05 LOCAL CONTROL STATION ELEVATION
SCALE: NONE
(TYP. FOR SC-CD-403, SC-CD-404, SPS2-SCP-101, & SPS2-SCP-102)

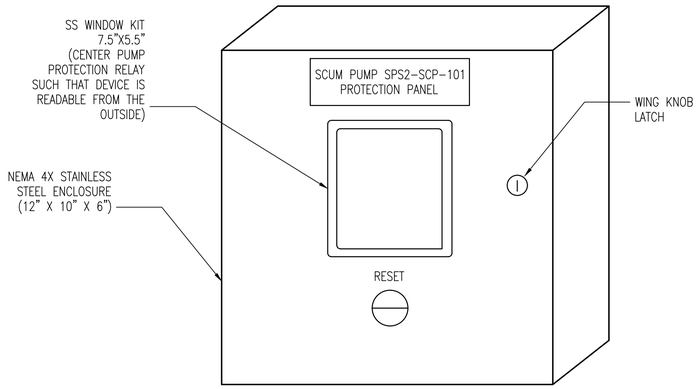

2 / I06.05 PUMP PROTECTION PANEL ELEVATION
SCALE: NONE
(SPS2-SCP-101 SHOWN, TYP. FOR SPS2-SCP-102)

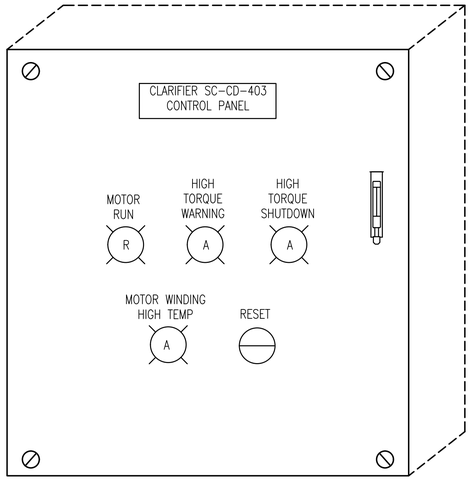

3 / I06.05 MCC-PB2 CLARIFIER CONTROL PANEL ELEVATION
SCALE: NONE
(SC-CD-403 SHOWN, TYP. FOR SC-CD-404)

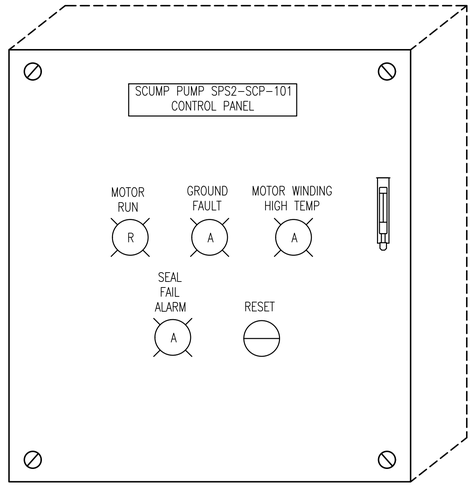

4 / I06.05 MCC-PB2 SCUM PUMP CONTROL PANEL ELEVATION
SCALE: NONE
(SPS2-SCP-101 SHOWN, TYP. FOR SPS2-SCP-102)

REVISIONS

CLIENT INFORMATION

SUSSEX COUNTY, DE
ENGINEERING
DEPARTMENT

INLAND BAYS RWF
PHASE #2 EXPANSION:
CONTRACT S19-10

KEY PLAN

GRAPHIC SCALES

SIGNATURE



Whitman, Requardt & Associates, LLP
801 South Caroline Street, Baltimore, Maryland 21231

CLARIFIERS & SCUM PUMPING
STATION PANEL ELEVATIONS

DRAWING NO.

I06.05

SCALE: AS SHOWN		
DATE: JULY 2019	SHEET 198 OF 229	
DES: JJN	DRAWN: JJN	CHECK: PWG

N:\14256-026\CADD\14256026I06-05.dwg

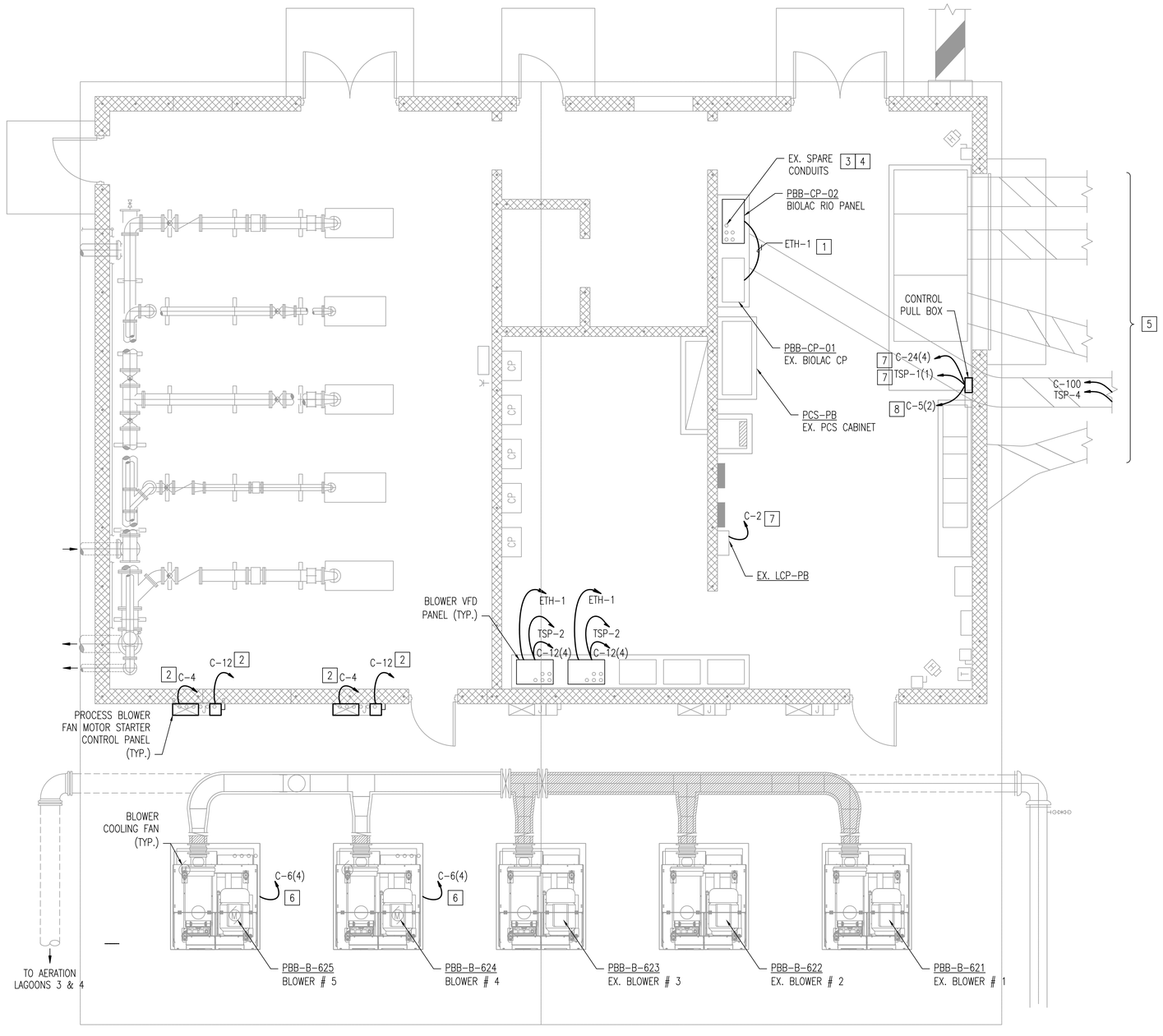

1 / I07.01 EXISTING PUMP AND BLOWER BUILDING NO. 1
SCALE: 1/4" = 1'-0"

GENERAL NOTES

1. SEE I&C SYMBOLS, LEGENDS AND ABBREVIATIONS SHEET FOR DETAILS.
2. SEE ELECTRICAL DRAWINGS FOR ADDITIONAL INSTALLATION AND EQUIPMENT REQUIREMENTS.
3. UNLESS OTHERWISE INDICATED, ALL CONDUIT AND CONDUCTOR SHALL BE TERMINATED AT BIOLAC RIO PANEL. COORDINATE TERMINATIONS WITH THE RIO PANEL SUPPLIER.

X SPECIFIC NOTES

1. REFER TO NETWORK ARCHITECTURE FOR ADDITIONAL REQUIREMENTS AND NETWORK DETAILS.
2. PULL WIRE THROUGH EXISTING SPARE CONDUITS TO BLOWER VFD PANEL.
3. ROUTE NEW CABLE AND CONDUCTORS TO THE NEW AERATION LAGOONS VIA THE EXISTING DUCTBANKS/HANDHOLES AND NEW DUCTBANKS/HANDHOLES. REFER TO ELECTRICAL DRAWING FOR ADDITIONAL DETAILS.
4. REFER TO I-PLAN DRAWING FOR CABLE AND CONDUCTOR REQUIREMENTS AND QUANTITIES.
5. REFER TO ELECTRICAL SITE PLAN FOR CONTINUATION.
6. PULL WIRE THROUGH EXISTING SPARE CONDUITS TO WALL MOUNTED JUNCTION BOX.
7. TERMINATE CONDUIT AND CONDUCTORS AT PCS-PB. WIRE TO EX. SPARE I/O POINTS.
8. TERMINATE CONDUIT AND CONDUCTORS AT EX. LCP-PB.

REVISIONS

CLIENT INFORMATION

SUSSEX COUNTY, DE
ENGINEERING DEPARTMENT

INLAND BAYS RWF
PHASE #2 EXPANSION:
CONTRACT S19-10

KEY PLAN

GRAPHIC SCALES

0 2' 4' 8'
SCALE: 1/4" = 1'-0"

SIGNATURE

PADRAIC WILLIAM GRAY LICENSE No. 18620 7/11/2019 DELAWARE PROFESSIONAL ENGINEER

Whitman, Requardt & Associates, LLP
801 South Caroline Street, Baltimore, Maryland 21231

PUMP AND BLOWER BUILDING NO. 1 - PLAN

DRAWING NO.

I07.01

SCALE: AS SHOWN	
DATE: JULY 2019	SHEET 199 OF 229
DES: GAH	DRAWN: GAH	CHECK: PWG

PLOT DATE: 7/10/2019 12:51:52 PM PAGE SETUP: WRA-PDF (36X24) PLOT STYLE: WRA_2006.CTB PAPER SIZE:ARCH FULL BLEED D (36.00 X 24.00 INCHES)

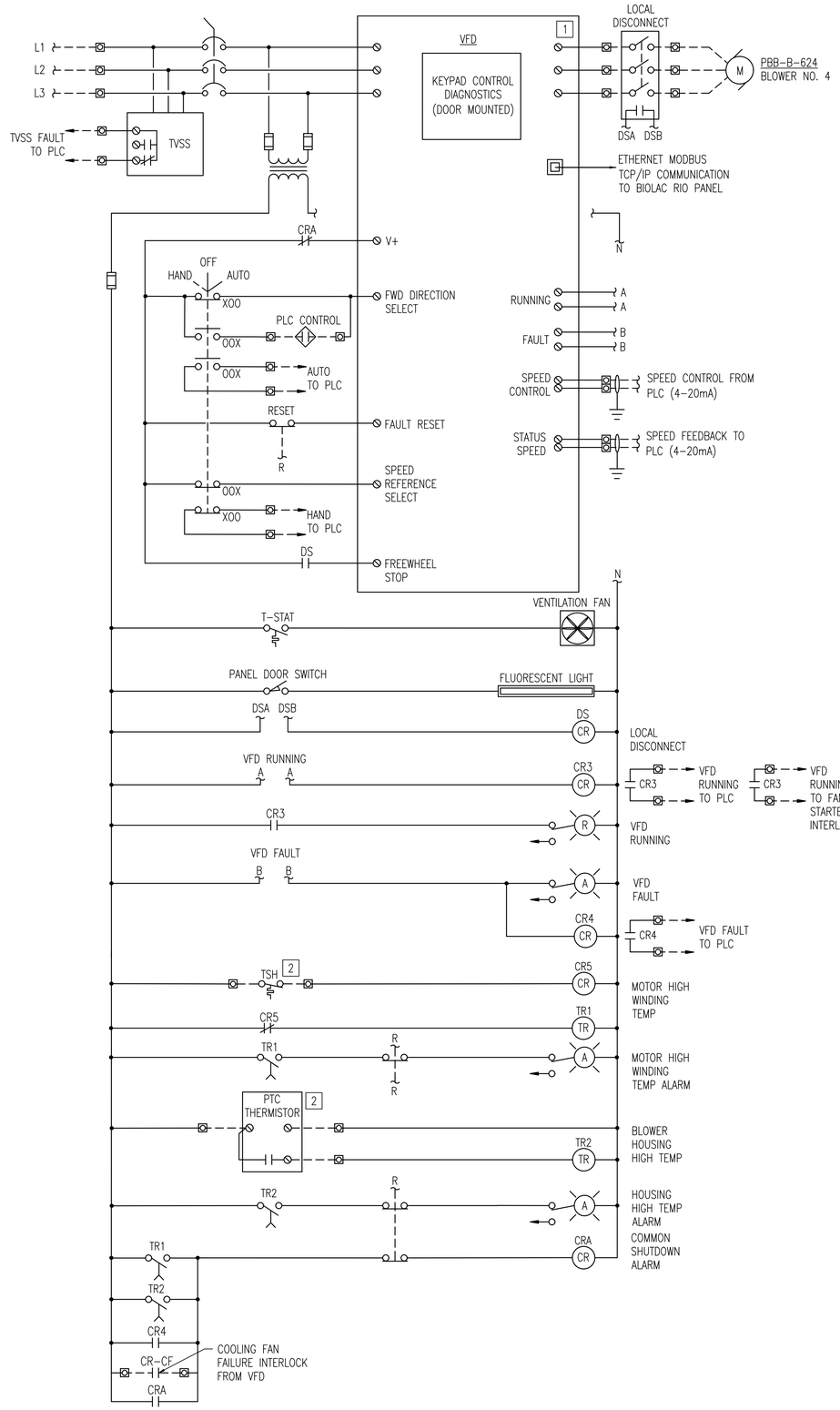

1 I07.02 PROCESS BLOWER VFD ELEMENTARY

(PBB-B-624 SHOWN, TYP. FOR PBB-B-625)

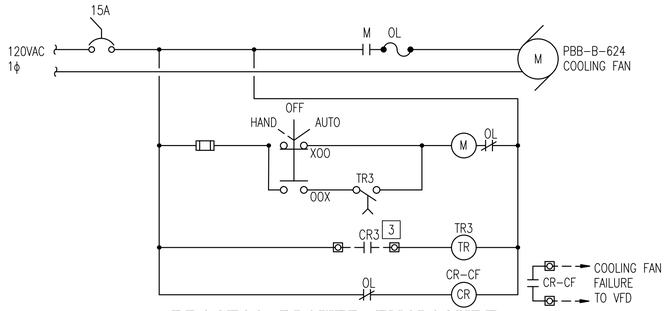

2 I07.02 PROCESS BLOWER ENCLOSURE FAN MOTOR STARTER ELEMENTARY

(PBB-B-624 SHOWN, TYP. FOR PBB-B-625)

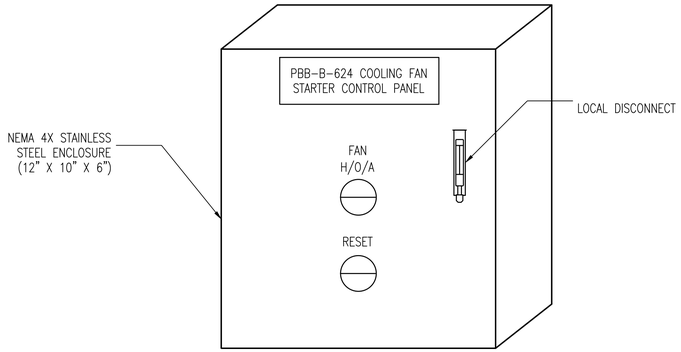

3 I07.02 PROCESS BLOWER COOLING FAN STARTER PANEL ELEVATION

(PBB-B-624 COOLING CP SHOWN, TYP. FOR PBB-B-625 COOLING CP)

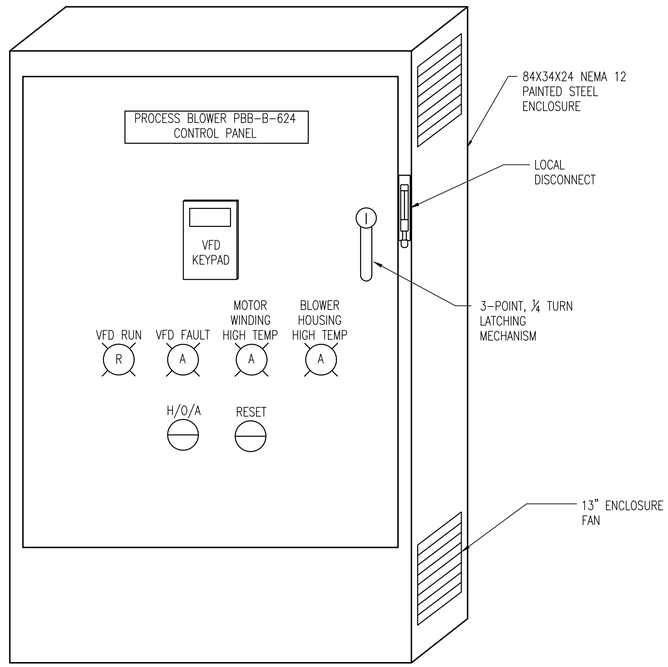

4 I07.02 PROCESS BLOWER VFD PANEL ELEVATION

(PBB-B-624 SHOWN, TYP. FOR PBB-B-625)

GENERAL NOTES

1. SEE I&C SYMBOLS, LEGENDS AND ABBREVIATIONS SHEET FOR DETAILS.

X SPECIFIC NOTES

1. IN LOCAL MODE, THE BLOWER SPEED WILL BE ADJUSTABLE VIA VFD KEYPAD ENTRY. IN AUTO MODE, THE BLOWER SPEED WILL BE CONTROLLED BY THE BIOLAC CONTROL PANEL PLC.
2. LOCATED IN THE FIELD AND PROVIDED BY BLOWER MANUFACTURER.
3. FROM BLOWER VFD PANEL.

REVISIONS

CLIENT INFORMATION

SUSSEX COUNTY, DE ENGINEERING DEPARTMENT

INLAND BAYS RWF PHASE #2 EXPANSION: CONTRACT S19-10

KEY PLAN

GRAPHIC SCALES

0 2' 4' 8'
SCALE: 1/4" = 1'-0"

0 1' 2' 3' 5'
SCALE: 3/8" = 1'-0"

SIGNATURE



Whitman, Requardt & Associates, LLP
801 South Caroline Street, Baltimore, Maryland 21231

PUMP & BLOWER BUILDING NO. 1 CONTROL DIAGRAMS

DRAWING NO.

I07.02

SCALE: AS SHOWN		
DATE: JULY 2019	SHEET 200 OF 229	
DES: JJN	DRAWN: JJN	CHECK: PWG

N:\14256-026\CADD\14256026I07-02.dwg

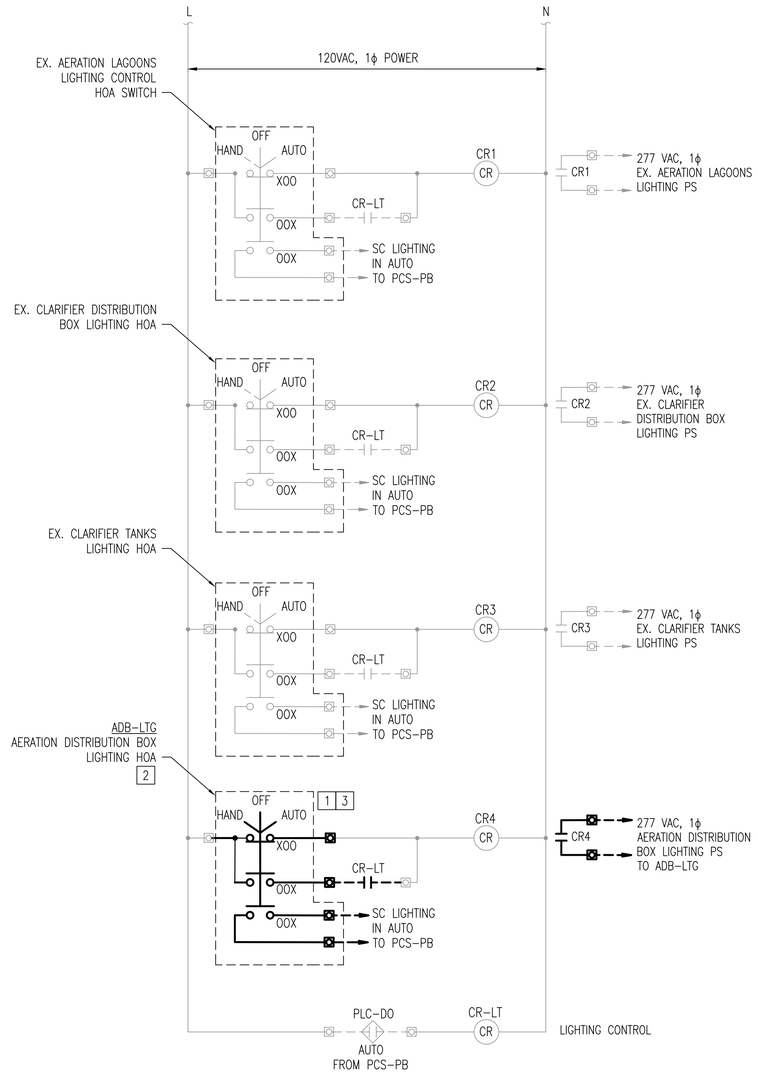

3 / I07.03 EX. LCP-PB CONTROL PANEL ELEMENTARY

SCALE: NONE

GENERAL NOTES

1. SEE I&C SYMBOLS, LEGENDS AND ABBREVIATIONS SHEET FOR DETAILS.
2. NEW WORK SHOWN IN BOLD.

[X] SPECIFIC NOTES

1. DEVICE/COMPONENT IS LOCATED ADJACENT TO PROCESS EQUIPMNET IN THE FIELD. REFER TO INSTRUMENTATION & ELECTRICAL PLAN DRAWINGS FOR LOCATION.
2. NEW AERATION DIST. BOX LIGHTING HOA WIRED TO THE EXISTING LCP-PB. WIRE HOA TO EXISTING SPARE LIGHTING CONTROL RELAY LOGIC. CONTRACTS SHALL FIELD VERIFY EXISTING CONDITIONS AND SPARE TERMINATION POINTS.
3. PROVIDE ADDITIONAL TERMINAL BLOCKS AS SHOWN.

REVISIONS		

CLIENT INFORMATION

SUSSEX COUNTY, DE ENGINEERING DEPARTMENT

INLAND BAYS RWF PHASE #2 EXPANSION: CONTRACT S19-10

KEY PLAN

GRAPHIC SCALES

SIGNATURE

PATRICK WILLIAM GRACH LICENSE NO. 19320 7/11/19 DELAWARE PROFESSIONAL ENGINEER

Whitman, Requardt & Associates, LLP
801 South Caroline Street, Baltimore, Maryland 21231

PUMP AND BLOWER BUILDING NO. 1
LIGHTING CONTROL DIAGRAM

DRAWING NO.

I07.03

SCALE: AS SHOWN		
DATE: JULY 2019	SHEET 201 OF 229	
DES: JJN	DRAWN: JJN	CHECK: PWG

PLOT DATED: 7/10/2019 12:31:58 PM PAGE SETUP: ----- PLOT STYLE: VRA_2006.CTB PAPER SIZE:ARCH FULL BLEED D (36.00 X 24.00 INCHES)

N:\14256-026\CADD\14256026D05-I03.dwg -ISS\CADD\14256026I07-03.DWG

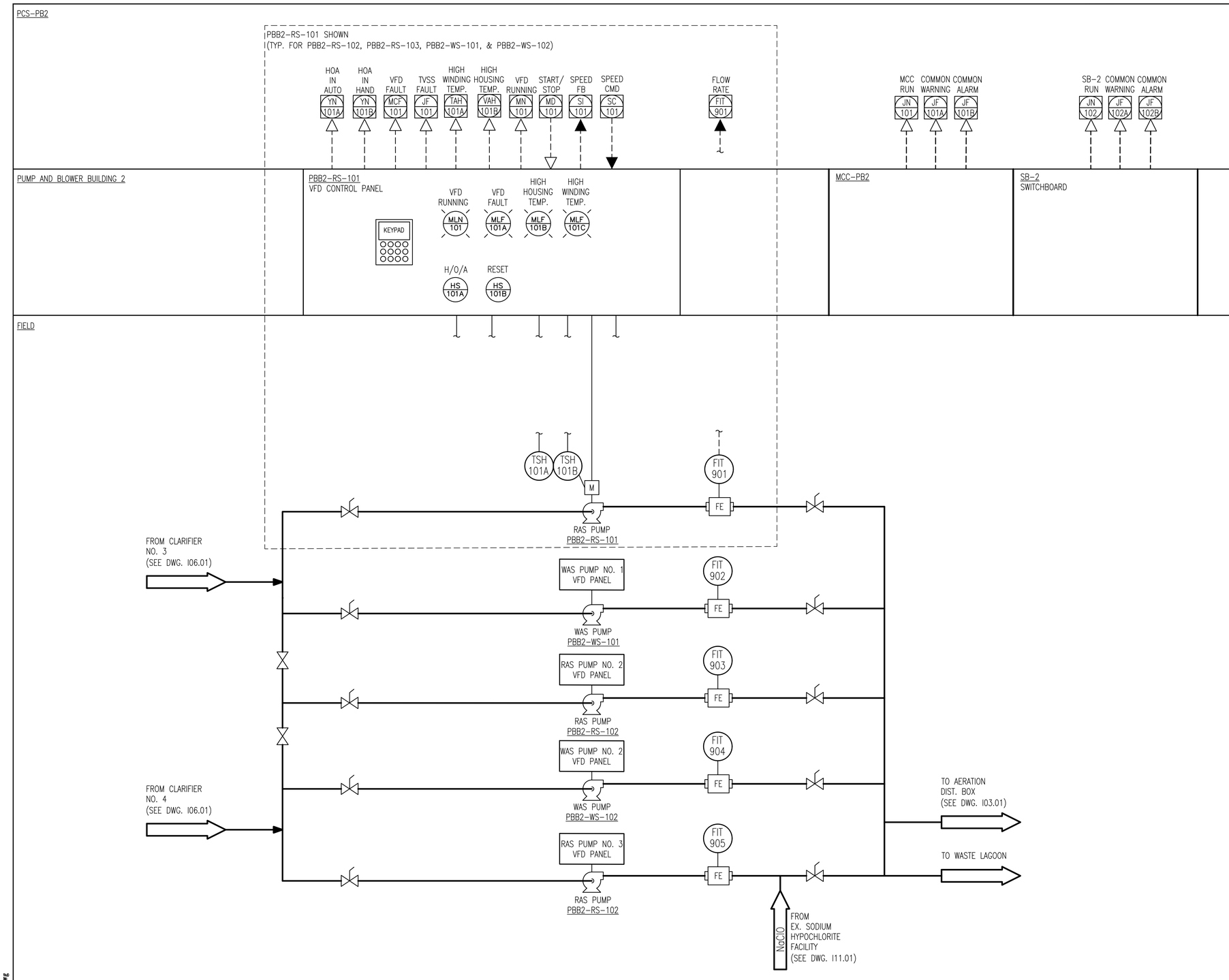

1 / I08.01 PUMP & BLOWER BUILDING NO. 2 P&ID
SCALE: NONE

GENERAL NOTES

1. SEE I&C SYMBOLS, LEGENDS AND ABBREVIATIONS SHEET FOR DETAILS.
2. P&ID SHOWN TO INDICATE CONTROL SYSTEM REQUIREMENTS AND DOES NOT REPRESENT A COMPLETE REFLECTION OF ALL PROCESS SYSTEM REQUIREMENTS. SEE MECHANICAL DRAWINGS FOR ADDITIONAL REQUIREMENTS.

REVISIONS		

CLIENT INFORMATION

SUSSEX COUNTY, DE
ENGINEERING
DEPARTMENT

INLAND BAYS RWF
PHASE #2 EXPANSION:
CONTRACT S19-10

KEY PLAN

GRAPHIC SCALES

SIGNATURE

PEDRAIC WILLIAM GALLAGHER LICENSE NO. 16620 7/11/19 DELAWARE PROFESSIONAL ENGINEER

Whitman, Requardt & Associates, LLP
801 South Caroline Street, Baltimore, Maryland 21231

PUMP AND BLOWER BUILDING NO. 2 P&ID

DRAWING NO.

I08.01

SCALE: AS SHOWN		
DATE: JULY 2019	SHEET 202 OF 229	
DES: JJN	DRAWN: JJN	CHECK: PWG

PLOT DATE: 7/10/2019 12:52:00 PM PAGE SETUP: ---- PLOT STYLE: VRA_2006.CTB PAPER SIZE:ARCH FULL BLEED D (36.00 X 24.00 INCHES)
N:\Active\1298.04\CAD\Contract\Drawings\Process\I08.01.dwg
PLTAREA: Layout1 LOGIN: jjn

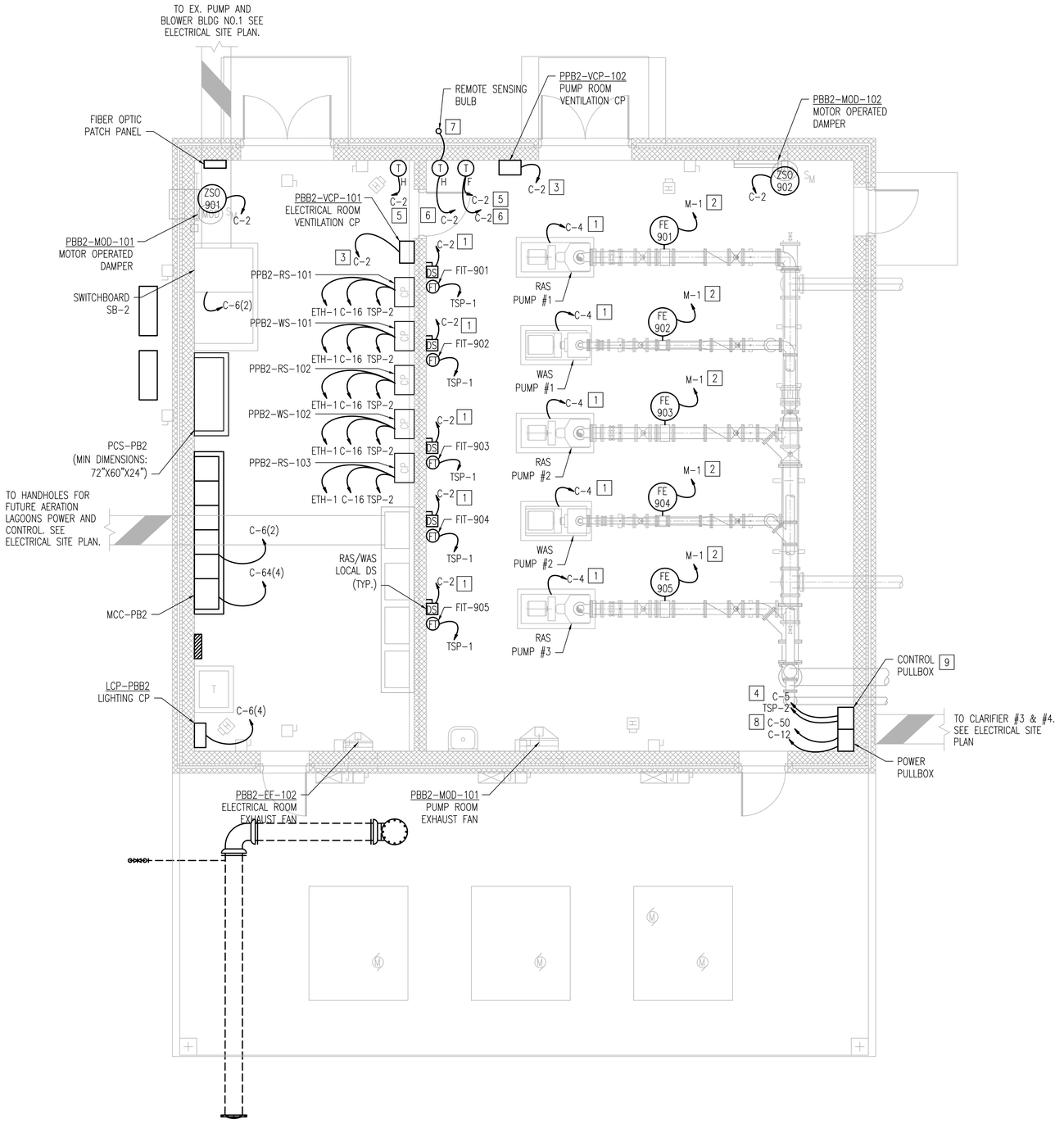

1 / I08.02 PUMP AND BLOWER BUILDING NO. 2 PLAN

GENERAL NOTES

1. SEE I&C SYMBOLS, LEGENDS AND ABBREVIATIONS SHEET FOR DETAILS.
2. SEE ELECTRICAL DRAWINGS FOR ADDITIONAL INSTALLATION AND EQUIPMENT REQUIREMENTS.
3. UNLESS OTHERWISE INDICATED, ALL CONDUIT AND CONDUCTOR SHALL BE TERMINATED AT CONTROL PANEL, PCS-PB2.

X SPECIFIC NOTES

1. TERMINATE CONDUIT AND CONDUCTOR AT ASSOCIATED RAS/WAS PUMP VFD CONTROL PANEL.
2. TERMINATE CONDUIT AND CONDUCTOR AT ASSOCIATED FLOW TRANSMITTER.
3. CONDUIT AND CONDUCTORS TO MCCPB2.
4. CONDUIT AND CONDUCTORS TO LCP-PBB2.
5. CONDUIT AND CONDUCTORS TO PBB2-VCP-101.
6. CONDUIT AND CONDUCTORS TO PBB2-VCP-102.
7. INSTALL REMOTE SENSING BULB AS CLOSE AS POSSIBLE TO THE EXTERIOR NORTHWEST CORNER OF THE BUILDING. COORDINATE EXACT PLACEMENT WITH ALL AFFECTED DISCIPLINES.
8. CONDUIT & CONDUCTORS TO ASSOCIATED CLARIFIER/SCUM PUMP CONTROLS IN MCC-PB2.
9. CONDUCTORS ROUTED FROM THEIR ORIGIN TO THE DESTINATION SHOWN VIA THE PULLBOX WITHOUT SPLICE.
10. ANALOG AND DIGITAL CONTROL SIGNAL WIRING MUST BE ISOLATED AT A SAFE DISTANCE FROM EACH OTHER AND CROSS AT RIGHT ANGLES TO MINIMIZE INDUCTION WITHIN THE CONTROLS PULL BOX. PULL BOX MUST BE SIZED TO ACCOMMODATE THESE REQUIREMENTS.
11. ANALOG AND DIGITAL CONTROL SIGNAL WIRING SHALL BE ROUTED IN SEPARATE DEDICATED CONDUITS. ANALOG SIGNAL CONDUIT SHALL BE GROUNDED TO ISOLATE AGAINST ELECTRICAL NOISE.

REVISIONS

CLIENT INFORMATION

SUSSEX COUNTY, DE ENGINEERING DEPARTMENT

INLAND BAYS RWF PHASE #2 EXPANSION: CONTRACT S19-10

KEY PLAN

GRAPHIC SCALES

0 2' 4' 8'

SCALE: 1/4" = 1'-0"

SIGNATURE

PADRAIC WILLIAM GAH LICENSE No. 16620 7/11/2019 DELAWARE PROFESSIONAL ENGINEER

WRA

Whitman, Requardt & Associates, LLP
801 South Caroline Street, Baltimore, Maryland 21231

PUMP & BLOWER BUILDING NO. 2 PLAN

DRAWING NO.

I08.02

SCALE: AS SHOWN

DATE: JULY 2019 | SHEET 203 OF 229

DES: GAH | DRAWN: GAH | CHECK: PWG

PLOT DATE: 7/10/2019 12:52:03 PM PAGE SETUP: WRA-PDF (36X24) PLOT STYLE: WRA_2006.CTB PAPER SIZE:ARCH FULL BLEED D (36.00 X 24.00 INCHES)

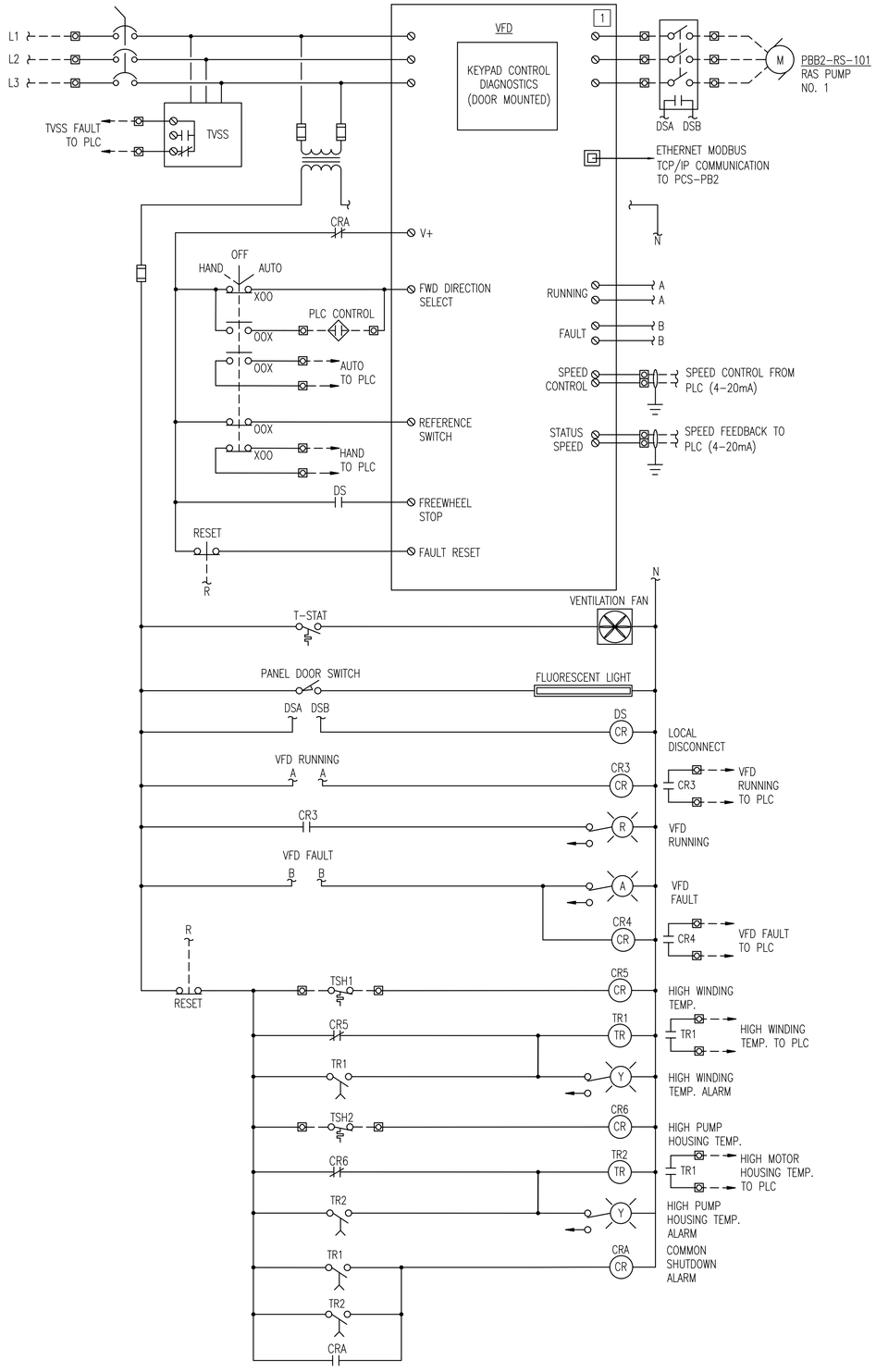

1 / I08.03 RAS PUMP VFD ELEMENTARY
(PBB2-RS-101 SHOWN, TYP. FOR PBB2-RS-102, PBB2-RS-103, PBB2-WS-101, & PBB2-WS-102)

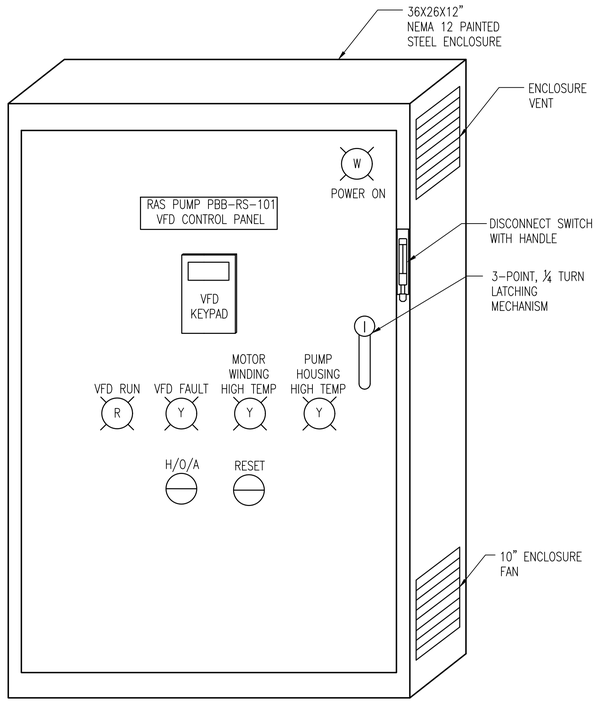

2 / I08.03 RAS PUMP VFD PANEL ELEVATION
SCALE: NONE
(PBB-RS-101 SHOWN, TYP. FOR PBB-RS-102, PBB-RS-103, PBB-WS-101, & PBB-WS-102)

GENERAL NOTES

1. SEE I&C SYMBOLS, LEGENDS AND ABBREVIATIONS SHEET FOR DETAILS.

X SPECIFIC NOTES

1 LOCAL CONTROL PANEL. SEE I-DRAWAINGS FOR ADDITIONAL DETAILS.

REVISIONS

CLIENT INFORMATION

SUSSEX COUNTY, DE
ENGINEERING DEPARTMENT

INLAND BAYS RWF
PHASE #2 EXPANSION:
CONTRACT S19-10

KEY PLAN

GRAPHIC SCALES

SIGNATURE

PADRAIC WILLIAM GRAY
LICENSE
No. 16620
7/11/2019
DELAWARE
PROFESSIONAL ENGINEER

Whitman, Requardt & Associates, LLP
801 South Caroline Street, Baltimore, Maryland 21231

RAS/WAS PUMP
CONTROL DIAGRAMS

DRAWING NO.

I08.03

SCALE: AS SHOWN		
DATE: JULY 2019	SHEET 204 OF 229	
DES: JJN	DRAWN: JJN	CHECK: PWG

N:\14256-026\CADD\14256026I08-03.dwg
PLOT DATE: 7/10/2019 12:52:06 PM PAGE SETUP: ---- PLOT STYLE: WRA_2006.CTB PAPER SIZE:ARCH FULL BLEED D (36.00 X 24.00 INCHES)

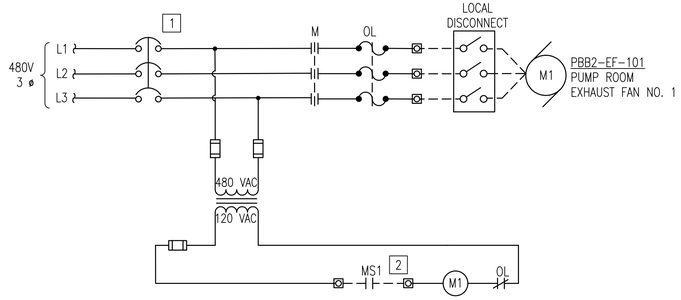

1 / I08.04 PBB2 PUMP ROOM MCC ELEMENTARY 2 3
SCALE: NONE
(PBB2-EF-101 SHOWN, TYP. FOR PBB2-EF-102)

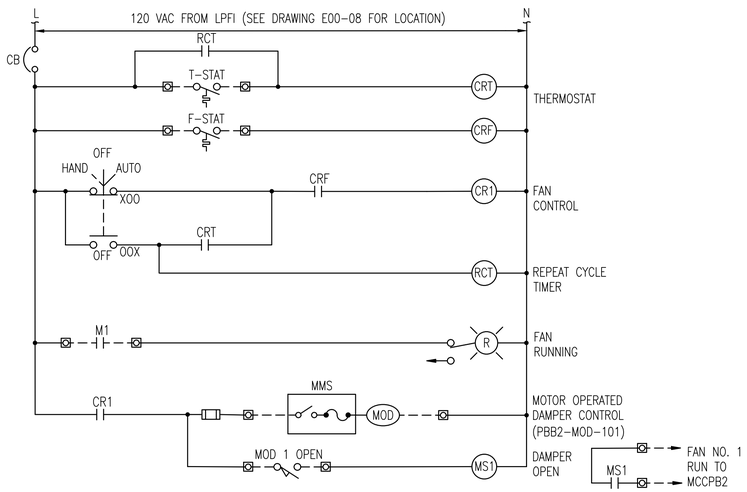

2 / I08.04 PBB2 PUMP ROOM VENTILATION PANEL ELEMENTARY 3
SCALE: NONE
(PBB2-EF-101 SHOWN, TYP. FOR PBB2-EF-102)

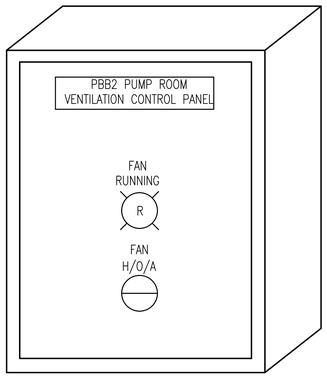

3 / I08.04 PBB2 PUMP ROOM VENTILATION CONTROL PANEL 3
SCALE: NONE
(PBB2-EF-101 SHOWN, TYP. FOR PBB2-EF-102)

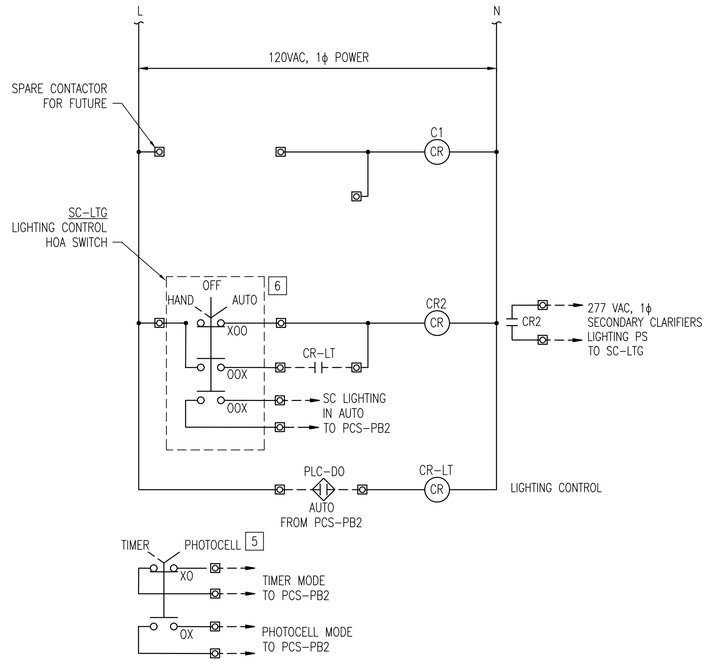

4 / I08.04 PUMP & BLOWER BUILDING NO. 2 LIGHTING CONTROL ELEMENTARY
SCALE: NONE

GENERAL NOTES

1. SEE I&C SYMBOLS, LEGENDS AND ABBREVIATIONS SHEET FOR DETAILS.

X SPECIFIC NOTES

1. DISCONNECT SWITCH WITH DOOR MOUNTED HANDLE. DISCONNECT SHALL RATING SHALL BE IN ACCORDANCE WITH THE CONNECTED LOAD AND THE NATIONAL ELECTRIC CODE.
2. RELAY CONTACT LOCATED IN PUMP ROOM VENTILATION CONTROL PANEL.
3. PROVIDE SEPARATE VENTILATION PANELS & CIRCUITS FOR PUMP ROOM & ELECTRICAL ROOM.
4. LIMIT SWITCH CLOSES WHEN MOD IS FULLY OPEN.
5. WALL MOUNTED PHOTOCELL: MOUNT OUTSIDE OF FILTERED IRRIGATION PUMP STATION AS INDICATED ON THE ELECTRICAL DRAWINGS.
6. DEVICE/COMPONENT IS LOCATED ADJACENT TO PROCESS EQUIPMNET IN THE FIELD. REFER TO INSTRUMENTATION & ELECTRICAL PLAN DRAWINGS FOR LOCATION.

REVISIONS

CLIENT INFORMATION

SUSSEX COUNTY, DE
ENGINEERING
DEPARTMENT

INLAND BAYS RWF
PHASE #2 EXPANSION:
CONTRACT S19-10

KEY PLAN

GRAPHIC SCALES

SIGNATURE



Whitman, Requardt & Associates, LLP
801 South Caroline Street, Baltimore, Maryland 21231

PUMP & BLOWER
BUILDING NO. 2
MISC. CONTROL DIAGRAMS

DRAWING NO.

I08.04

SCALE: AS SHOWN		
DATE: JULY 2019	SHEET 205 OF 229	
DES: JJN	DRAWN: JJN	CHECK: PWG

PLOT DATE: 7/10/2019 12:52:08 PM PAGE SETUP: ---- PLOT STYLE: WRA_2006.CTB PAPER SIZE:ARCH FULL BLEED D (36.00 X 24.00 INCHES)
N:\14256-026\CADD\14256026I08-04.dwg

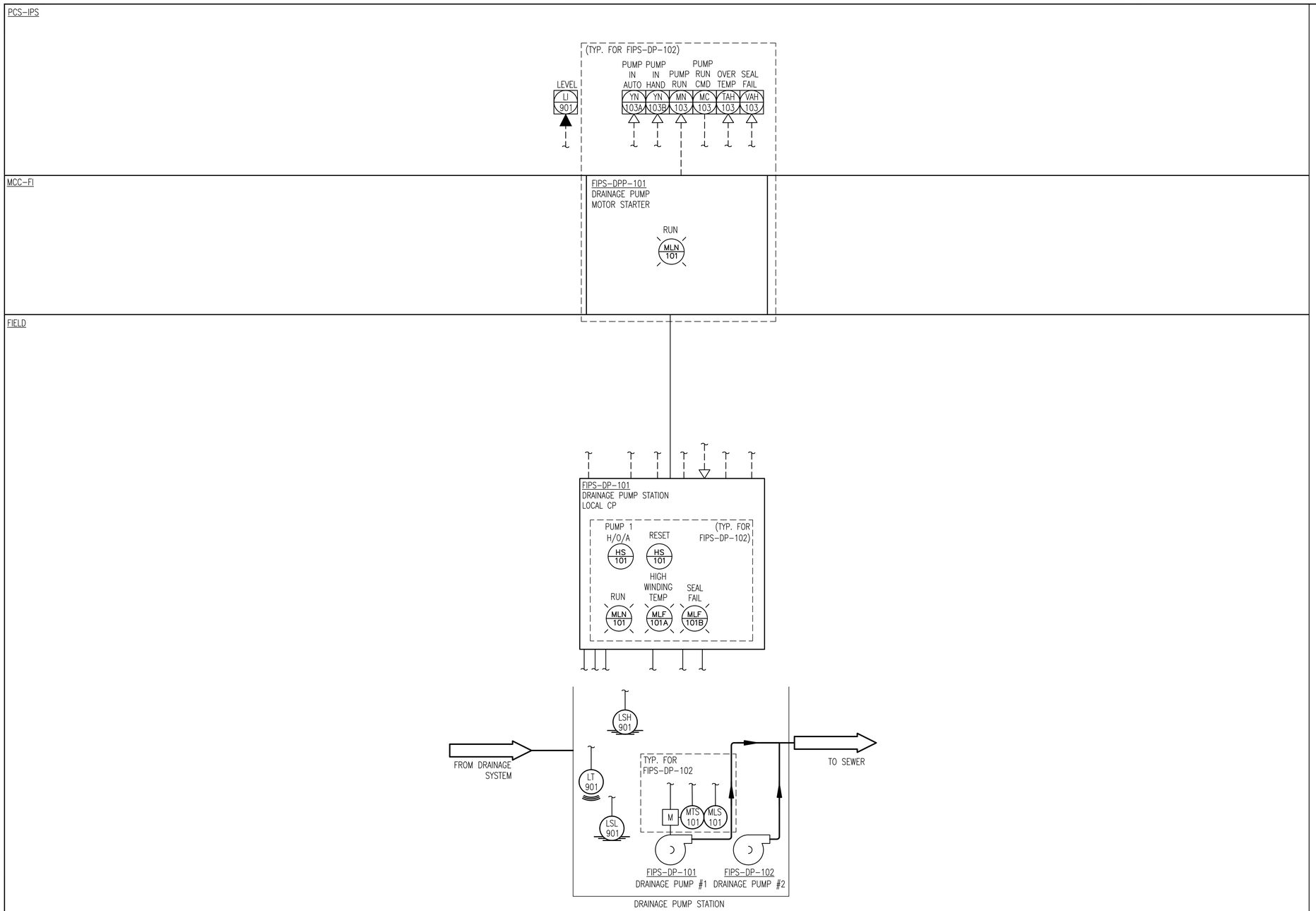

1 / I09.01 FILTERED IRRIGATION PUMPING STATION P&ID

GENERAL NOTES

1. SEE I&C SYMBOLS, LEGENDS AND ABBREVIATIONS SHEET FOR DETAILS.
2. P&ID SHOWN TO INDICATE CONTROL SYSTEM REQUIREMENTS AND DOES NOT REPRESENT A COMPLETE REFLECTION OF ALL PROCESS SYSTEM REQUIREMENTS. SEE MECHANICAL DRAWINGS FOR ADDITIONAL REQUIREMENTS.

X SPECIFIC NOTES

1. CONTROL PANEL PROVIDED BY MANUFACTURER AND INSTALLED BY CONTRACTOR.

REVISIONS

CLIENT INFORMATION

SUSSEX COUNTY, DE
ENGINEERING
DEPARTMENT

INLAND BAYS RWF
PHASE #2 EXPANSION:
CONTRACT S19-10

KEY PLAN

GRAPHIC SCALES

0 2' 4' 8'
SCALE: 1/4" = 1'-0"

SIGNATURE

PADRAIC WILLIAM GILL
LICENSE
No. 16620
7/11/2019
DELAWARE
PROFESSIONAL ENGINEER

Whitman, Requardt & Associates, LLP
801 South Caroline Street, Baltimore, Maryland 21231

FILTERED IRRIGATION PUMPING STATION P&ID

DRAWING NO.
I09.01

SCALE: AS SHOWN
DATE: JULY 2019 | SHEET 206 OF 229
DES: JJN | DRAWN: JJN | CHECK: PGH

PLOT DATE: 7/10/2019 12:52:10 PM PAGE SETUP: ---- PLOT STYLE: WRA_2006.CTB PAPER SIZEARCH FULL BLEED D (36.00 X 24.00 INCHES)

PCS-IPS

(FIPS-CMP-101 SHOWN, TYP. FOR FIPS-CMP-102)

(FIPS-IP-101 SHOWN, TYP. FOR FIPS-IP-102 & 103)

LEAK IND LAH 902
LEAK IND LAH 901
LVL IND LI 901
START/RUN MR 101
START/STOP SC 101B
FAULT MF 101
AUTO YN 101
SPEED CMD SC 101A
MCC RUN JN 101
COMMON WARNING JF 101
COMMON ALARM JF 101
GEN RUN JN 101
COMMON WARNING JF 101
COMMON ALARM JF 101
LVL IND LI 902
AUTO YN 101A
HAND YN 101B
VFD FAULT MCF 101
POWER FAIL JF 101
HIGH WINDING TEMP. TAH 101
VFD RUNNING MN 101
START/STOP MD 101
SPEED FB SI 101
SPEED CMD SC 101
FLOW RATE FI 901
PRESSURE PI 901

MCC-FI

FIELD

FIPS-GEN
FILTERED IRRIGATION PUMPING STATION EMERGENCY GENERATOR

FIPS-IP-101
IRRIGATION PUMP NO. 1 VFD CP
KEYPAD
VFD FAULT MLF 101 A
VFD RUNNING MLN 101 R
HIGH WINDING TEMP TAH 101 A
H/O/A HS 101A
RESET HS 101B

MTS 101
ESZ 101
IRRIGATION PUMP
FIPS-IP-101

FIT 901
PIT 901
FE
FIPS-FE-901
IRRIGATION LOOP EFFLUENT FLOW METER
TO IRRIGATION LOOP

IRRIGATION PUMP NO. 2 VFD PANEL
FIPS-IP-102
IRRIGATION PUMP NO. 3 VFD PANEL
FIPS-IP-103

FROM SODIUM HYPOCHLORITE FACILITY (SEE DWG. I11.01)

CHEMICAL PUMP SKID

FROM PRIMARY FILTERS (SEE DWG I09-01)

LT 902
FILTERED EFFLUENT LAGOON

CHEMICAL PUMP NO. 1 CONTROLLER
CHEMICAL PUMP NO. 2 CONTROLLER
FIPS-CMP-101 CHEMICAL METERING PUMP
FIPS-CMP-102 CHEMICAL METERING PUMP

LSH 901
LT 901
CHEMICAL DOSING TANK

LSH 902
MODULAR SPILL CONTAINMENT DECK

1 / I09.02 FILTERED IRRIGATION PUMPING STATION P&ID (CONT.)

GENERAL NOTES

1. SEE I&C SYMBOLS, LEGENDS AND ABBREVIATIONS SHEET FOR DETAILS.
2. P&ID SHOWN TO INDICATE CONTROL SYSTEM REQUIREMENTS AND DOES NOT REPRESENT A COMPLETE REFLECTION OF ALL PROCESS SYSTEM REQUIREMENTS. SEE MECHANICAL DRAWINGS FOR ADDITIONAL REQUIREMENTS.

[X] SPECIFIC NOTES

1. CONTROL PANEL PROVIDED BY MANUFACTURER AND INSTALLED BY CONTRACTOR.

REVISIONS		

CLIENT INFORMATION

SUSSEX COUNTY, DE ENGINEERING DEPARTMENT

INLAND BAYS RWF PHASE #2 EXPANSION: CONTRACT S19-10

KEY PLAN

GRAPHIC SCALES

0 2' 4' 8'
SCALE: 1/4" = 1'-0"

SIGNATURE

PATRICK WILLIAM GRACE LICENSE No. 10620 DELAWARE PROFESSIONAL ENGINEER 7/11/2019

WRA
Whitman, Requardt & Associates, LLP
801 South Caroline Street, Baltimore, Maryland 21231

FILTERED IRRIGATION PUMPING STATION P&ID (CONT.)

DRAWING NO.
I09.02

SCALE: AS SHOWN		
DATE: JULY 2019	SHEET 207 OF 229	
DES: JJN	DRAWN: JJN	CHECK: PWG

PLOT DATE: 7/10/2019 12:52:13 PM PAGE SETUP ----- PLOT STYLE: WRA_2004CTB PAPER SIZE:ARCH FULL BLEED D (36.00 X 24.00 INCHES)
N:\1875\active\1875.019\CAD\Construction\Sheets\I09.02 FILTERED IRRIGATION PUMPING STATION P&ID (CONT.).dwg

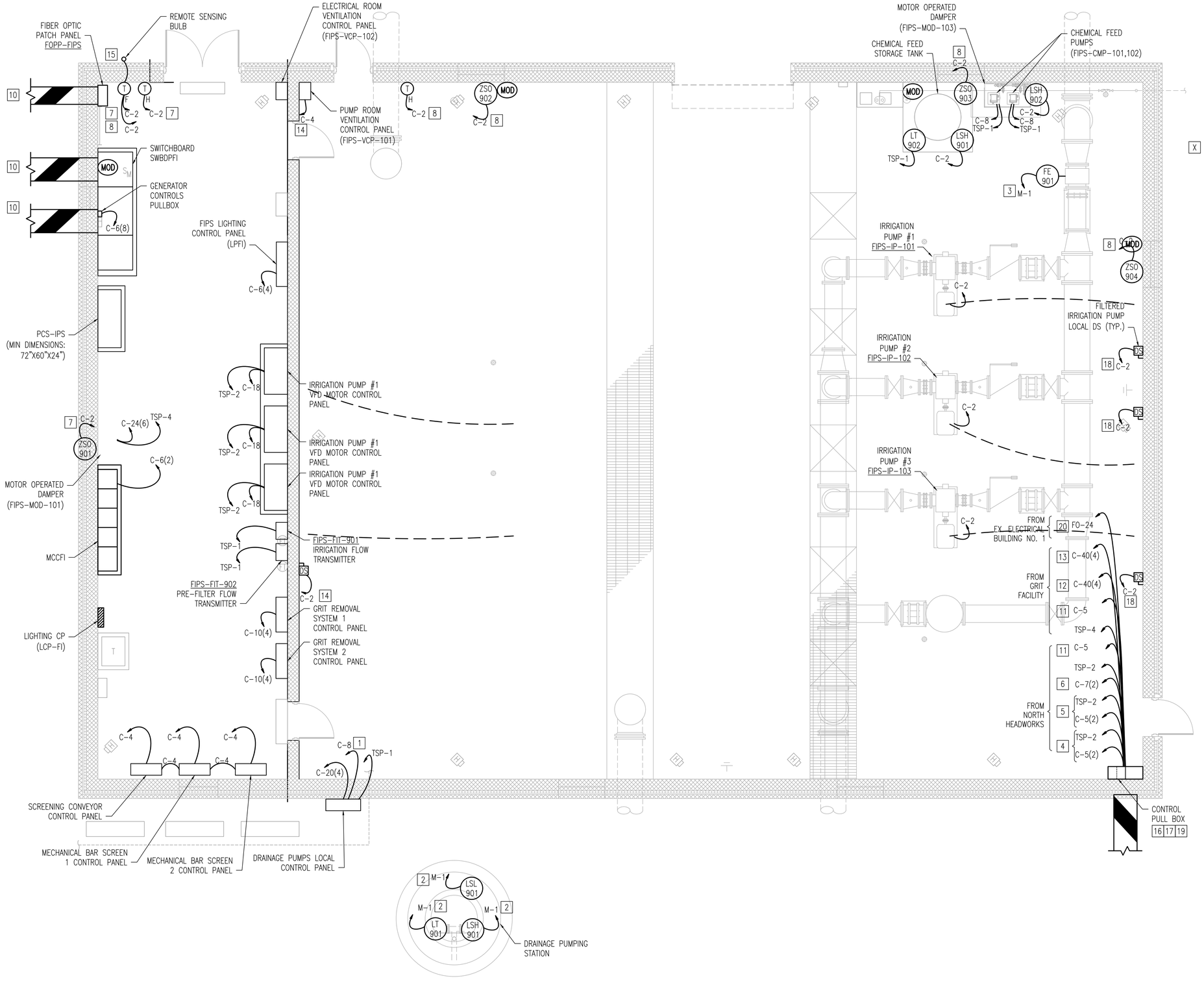

1 I09.03 FILTERED IRRIGATION PUMPING STATION PLAN
SCALE: 1/4" = 1'-0"

GENERAL NOTES

1. SEE I&C SYMBOLS, LEGENDS AND ABBREVIATIONS SHEET FOR DETAILS.
2. SEE ELECTRICAL DRAWINGS FOR ADDITIONAL INSTALLATION AND EQUIPMENT REQUIREMENTS.
3. UNLESS OTHERWISE INDICATED, ALL CONDUIT AND CONDUCTOR SHALL BE TERMINATED AT PCS-IPS.

X SPECIFIC NOTES

1. TERMINATE CABLE AND CONDUCTOR AT MCC.
2. TERMINATE CABLE AND CONDUCTOR AT DRAINAGE PUMPING STATION LOCAL CONTROL STATION.
3. TO FIPS-FIT-101 IN ELECTRICAL ROOM.
4. TERMINATE CABLE AND CONDUCTOR AT MECHANICAL BAR SCREEN 1 CONTROL PANEL.
5. TERMINATE CABLE AND CONDUCTOR AT MECHANICAL BAR SCREEN 2 CONTROL PANEL.
6. TERMINATE CABLE AND CONDUCTOR AT SCREENING CONVEYOR CONTROL PANEL.
7. TERMINATE CABLE AND CONDUCTOR AT ELECTRICAL ROOM VENTILATION CONTROL PANEL (FIPS-VCP-102).
8. TERMINATE CABLE AND CONDUCTOR AT PUMP ROOM VENTILATION CONTROL PANEL (FIPS-VCP-101).
9. THERMOSTATS SHALL BE MOUNTED ADJACENT TO THE VENTILATION CONTROL PANEL.
10. REFER TO THE ELECTRICAL SITE PLAN FOR CONTINUATION.
11. TERMINATE CABLE AND CONDUCTORS AT FILTERED IRRIGATION PUMPING STATION LIGHTING PANEL (LCP-FI)
12. TERMINATE CABLE AND CONDUCTOR AT GRIT REMOVAL SYSTEM 1 CONTROL PANEL.
13. TERMINATE CABLE AND CONDUCTOR AT GRIT REMOVAL SYSTEM 2 CONTROL PANEL.
14. TERMINATE CABLE AND CONDUCTOR AT MCCFI.
15. INSTALL REMOTE SENSING BULB AS CLOSE AS POSSIBLE TO THE EXTERIOR NORTHWEST CORNER OF THE BUILDING. COORDINATE EXACT PLACEMENT WITH AL AFFECTED DISCIPLINES.
16. ANALOG AND DIGITAL CONTROL SIGNAL WIRING MUST BE ISOLATED AT A SAFE DISTANCE FROM EACH OTHER AND CROSS AT RIGHT ANGLES TO MINIMIZE INDUCTION WITHIN THE CONTROLS PULL BOX. PULL BOX MUST BE SIZED TO ACCOMMODATE THESE REQUIREMENTS.
17. ANALOG AND DIGITAL CONTROL SIGNAL WIRING SHALL BE ROUTED IN SEPARATE DEDICATED CONDUITS. ANALOG SIGNAL CONDUIT SHALL BE GROUNDED TO ISOLATE AGAINST ELECTRICAL NOISE.
18. TERMINATE CABLE AND CONDUCTOR AT ASSOCIATED FILTERED IRRIGATION PUMP VFD CONTROL PANEL.
19. CONDUCTORS ROUTED FROM THEIR ORIGIN TO THE DESTINATION SHOWN VIA THE PULLBOX WITHOUT SPLICE.
20. TERMINATE FIBER OPTIC CABLE AT FOPP-FIPS.

REVISIONS		

CLIENT INFORMATION

SUSSEX COUNTY, DE
ENGINEERING
DEPARTMENT

INLAND BAYS RWF
PHASE #2 EXPANSION:
CONTRACT S19-10

KEY PLAN

GRAPHIC SCALES

0 2' 4' 8'
SCALE: 1/4" = 1'-0"

SIGNATURE

PEDRAC WILLIAM GUICENSE
No. 10620
7/11/19
DELAWARE
PROFESSIONAL ENGINEER

Whitman, Requardt & Associates, LLP
801 South Caroline Street, Baltimore, Maryland 21231

FILTERED IRRIGATION PUMPING STATION PLAN

DRAWING NO.
I09.03

SCALE: AS SHOWN		
DATE: JULY 2019	SHEET 208 OF 229	
DES: JJN	DRAWN: JJN	CHECK: PWG

PLOT DATE: 7/10/2019 12:52:46 PM PAGE SETUP: WRA-PDF C36(24) PLOT STYLE: WRA_2006CTB PAPER SIZE:ARCH FULL BLEED D (36.00 X 24.00 INCHES)

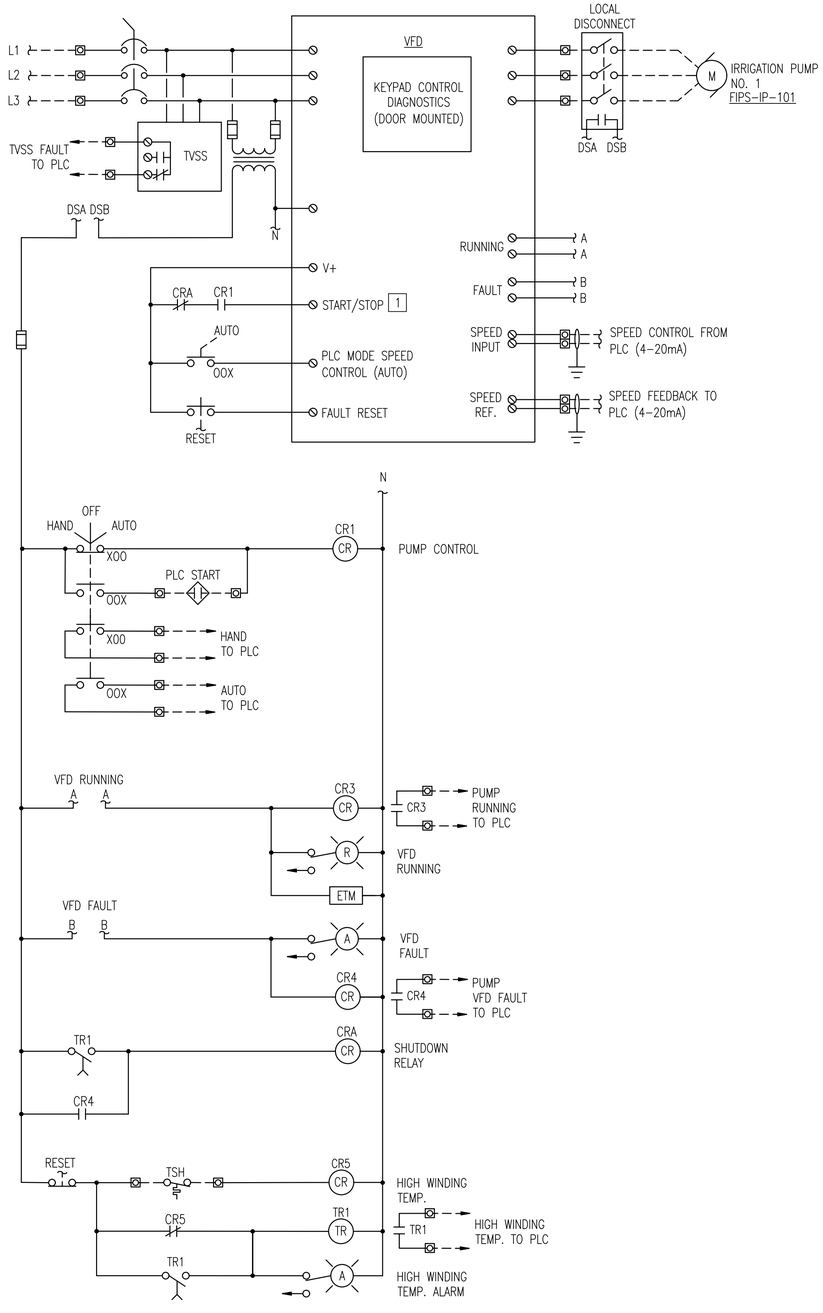

FILTERED IRRIGATION PUMP VFD ELEMENTARY

1 / I09.04 (FIPS-IP-101 SHOWN, TYP. FOR FIPS-IP-102 & FIPS-IP-103)

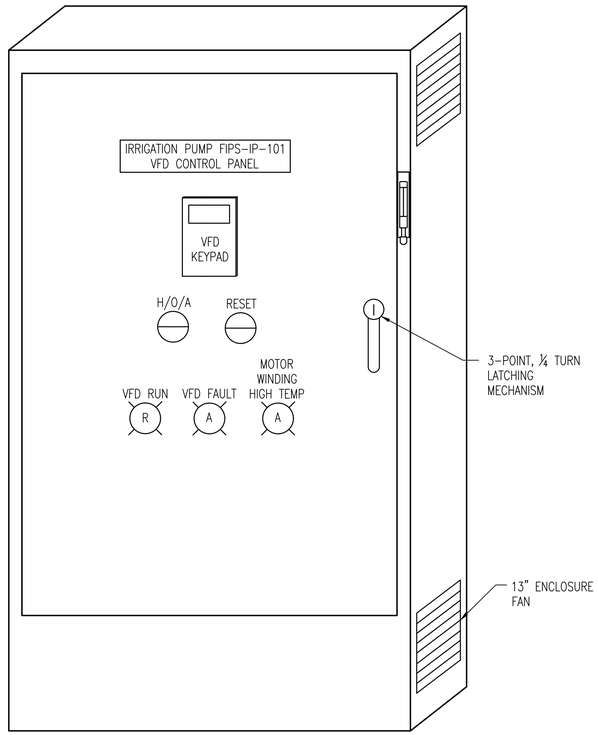

FILTERED IRRIGATION PUMP VFD PANEL ELEVATION

2 / I09.04 (FIPS-IP-101 SHOWN, TYP. FOR FIPS-IP-102 & FIPS-IP-103)

GENERAL NOTES

1. SEE I&C SYMBOLS, LEGENDS AND ABBREVIATIONS SHEET FOR DETAILS.

REVISIONS		

CLIENT INFORMATION

SUSSEX COUNTY, DE
ENGINEERING
DEPARTMENT

INLAND BAYS RWF
PHASE #2 EXPANSION:
CONTRACT S19-10

KEY PLAN

GRAPHIC SCALES

SIGNATURE

PATRICK WILLIAM GRACE LICENSE No. 19320 DELAWARE PROFESSIONAL ENGINEER
7/11/2019

Whitman, Requardt & Associates, LLP
801 South Caroline Street, Baltimore, Maryland 21231

FILTERED IRRIGATION PUMPS
CONTROL DIAGRAMS

DRAWING NO.

I09.04

SCALE: AS SHOWN		
DATE: JULY 2019	SHEET 209 OF 229	
DES: JJN	DRAWN: JJN	CHECK: PWG

PLOT DATE: 7/10/2019 12:52:18 PM PAGE SETUP ----- PLOT STYLE: VRA_2004CTB PAPER SIZE:ARCH FULL BLEED D (36.00 X 24.00 INCHES)
N:\14256-1223\CADD\Contract Documents\I09.04.dwg

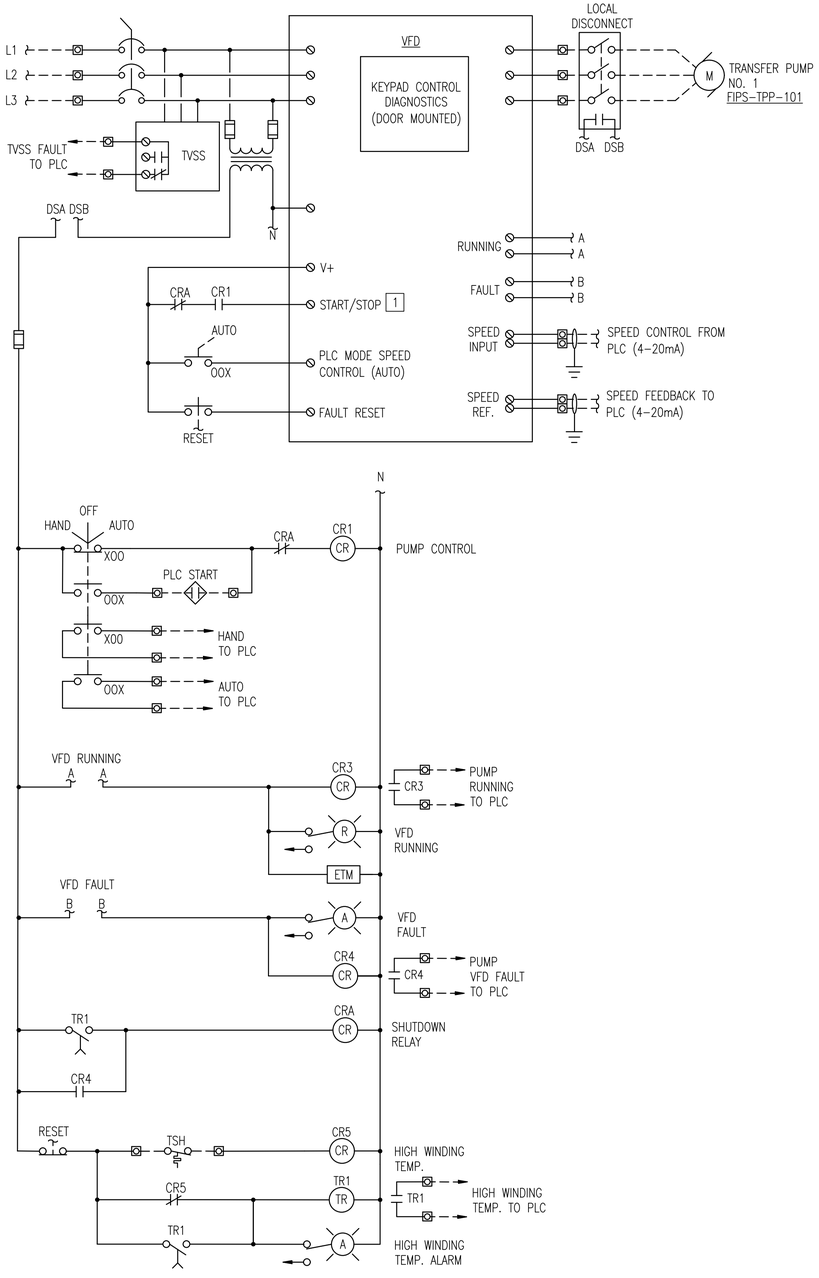

1 I09.05 TRANSFER PUMP VFD ELEMENTARY

(FIPS-TPP-101 SHOWN, TYP. FOR FIPS-TPP-102)

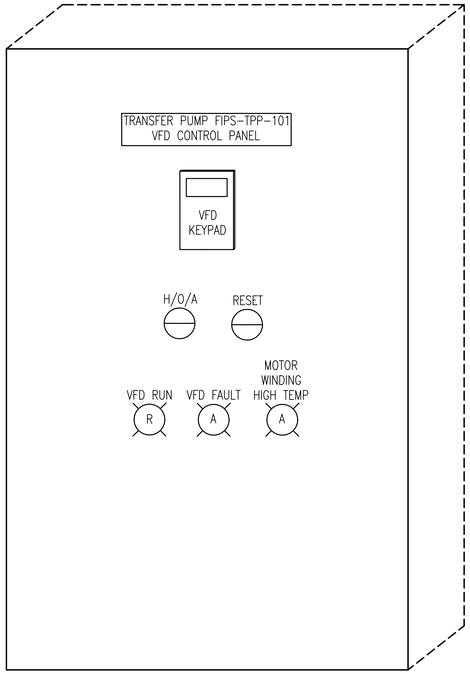

2 I09.05 TRANSFER PUMP MCC ELEVATION

(FIPS-TPP-101 SHOWN, TYP. FOR FIPS-TPP-102)

GENERAL NOTES

1. SEE I&C SYMBOLS, LEGENDS AND ABBREVIATIONS SHEET FOR DETAILS.

REVISIONS

CLIENT INFORMATION

SUSSEX COUNTY, DE
ENGINEERING
DEPARTMENT

INLAND BAYS RWF
PHASE #2 EXPANSION:
CONTRACT S19-10

KEY PLAN

GRAPHIC SCALES

SIGNATURE

PARRAG, WILLIAM G. LICENSE NO. 10620 DELAWARE PROFESSIONAL ENGINEER

Whitman, Requardt & Associates, LLP
801 South Caroline Street, Baltimore, Maryland 21231

TRANSFER PUMPS
ELECTRICAL CONTROL DIAGRAMS

DRAWING NO.

I09.05

SCALE: AS SHOWN		
DATE: JULY 2019	SHEET 210 OF 229	
DES: JJN	DRAWN: JJN	CHECK: PWG

PLOT DATE: 7/10/2019 10:52:20 PM PAGE SETUP: WRA-PDF (24X24) PLOT STYLE: WRA_2006.CTB PAPER SIZE:ARCH FULL BLEED D (36.00 X 24.00 INCHES)
N:\WRA\Projects\1003.C\DWG\Electrical\Sheets\I09.05.dwg

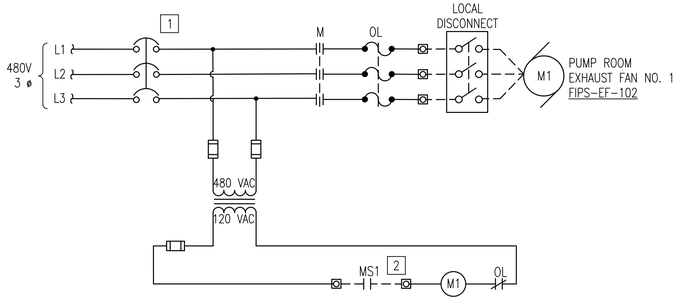

FILTERED IRRIGATION PUMP ROOM 3
FAN MOTOR CONTROL ELEMENTARY

1
I09.06
SCALE: NONE
(FIPS-EF-102 SHOWN, TYP. FOR FIPS-EF-103)

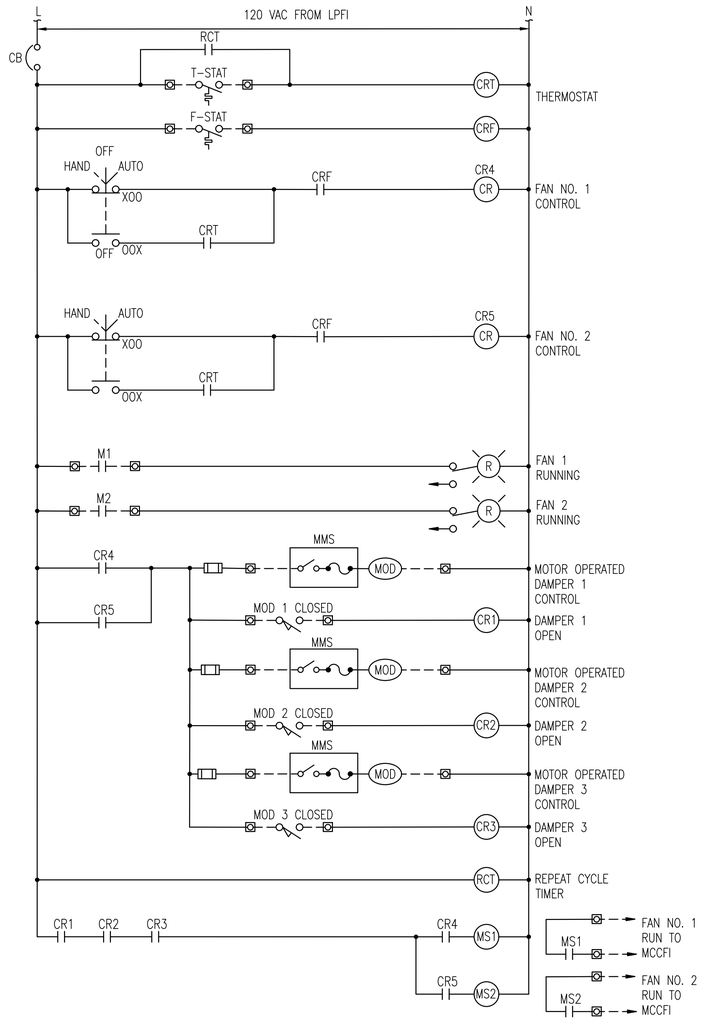

FILTERED IRRIGATION PUMP ROOM
VENTILATION PANEL ELEMENTARY

2
I09.06
SCALE: NONE

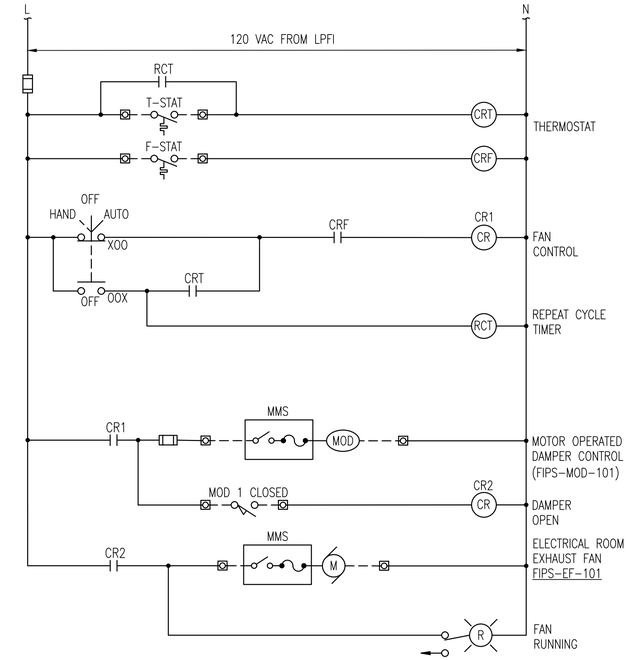

FILTERED IRRIGATION ELECTRICAL ROOM
VENTILATION PANEL ELEMENTARY

3
I09.06
SCALE: NONE

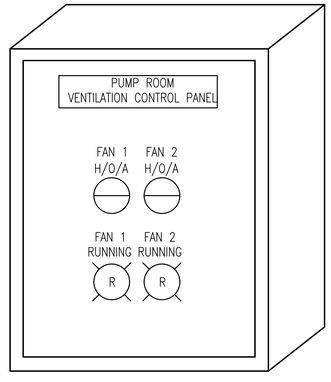

FILTERED IRRIGATION PUMP ROOM
VENTILATION PANEL ELEVATION

4
I09.06
SCALE: NONE

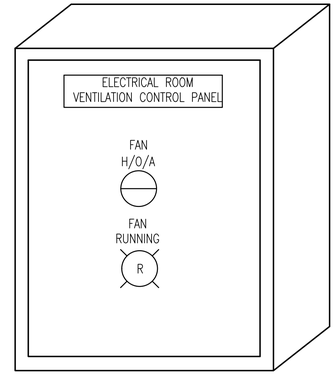

FILTERED IRRIGATION ELECTRICAL ROOM
VENTILATION PANEL ELEVATION

5
I09.06
SCALE: NONE

GENERAL NOTES

1. SEE I&C SYMBOLS, LEGENDS AND ABBREVIATIONS SHEET FOR DETAILS.

X SPECIFIC NOTES

1. DISCONNECT SWITCH WITH DOOR MOUNTED HANDLE. DISCONNECT SHALL RATING SHALL BE IN ACCORDANCE WITH THE CONNECTED LOAD AND THE NATIONAL ELECTRIC CODE.
2. CONTACT LOCATED IN FILTERED IRRIGATION PUMP ROOM VENTILATION PANEL.
3. MOTOR STARTER CIRCUIT LOCATED IN MCCFI.

REVISIONS

CLIENT INFORMATION

SUSSEX COUNTY, DE
ENGINEERING
DEPARTMENT

INLAND BAYS RWF
PHASE #2 EXPANSION:
CONTRACT S19-10

KEY PLAN

GRAPHIC SCALES

SIGNATURE



WRA
Whitman, Requardt & Associates, LLP
801 South Caroline Street, Baltimore, Maryland 21231

FILTERED IRRIGATION
PUMPING STATION
VENTILATION CONTROL DIAGRAMS

DRAWING NO.

I09.06

SCALE: AS SHOWN		
DATE: JULY 2019	SHEET 211 OF 229	
DES: JJN	DRAWN: JJN	CHECK: PWG

N:\14256-026\CADD\14256026I09-06.dwg
PLOT DATE: 7/10/2019 12:52:23 PM PAGE SETUP: ---- PLOT STYLE: WRA_2006.CTB PAPER SIZE:ARCH FULL BLEED D (36.00 X 24.00 INCHES)

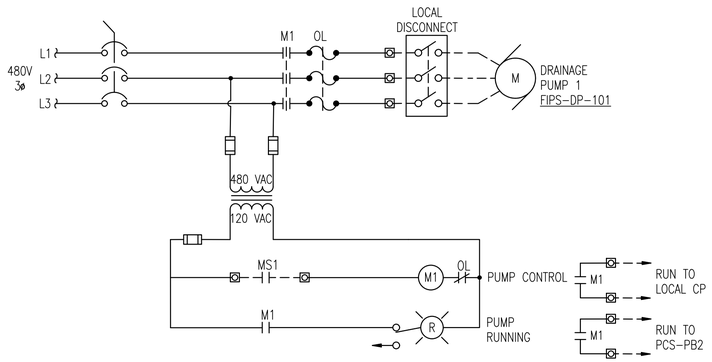

DRAINAGE PUMPS
MOTOR STARTER ELEMENTARY

1 / I09.07 SCALE: NONE
(FIPS-DP-101 SHOWN, TYP. FOR FIPS-DP-102)

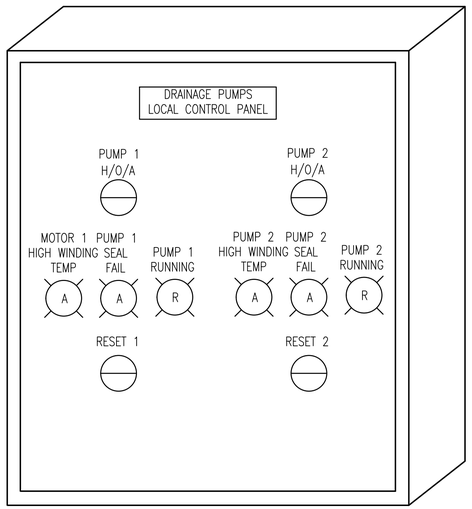

DRAINAGE PUMPS
LOCAL CONTROL PANEL ELEVATION

2 / I09.07 SCALE: NONE

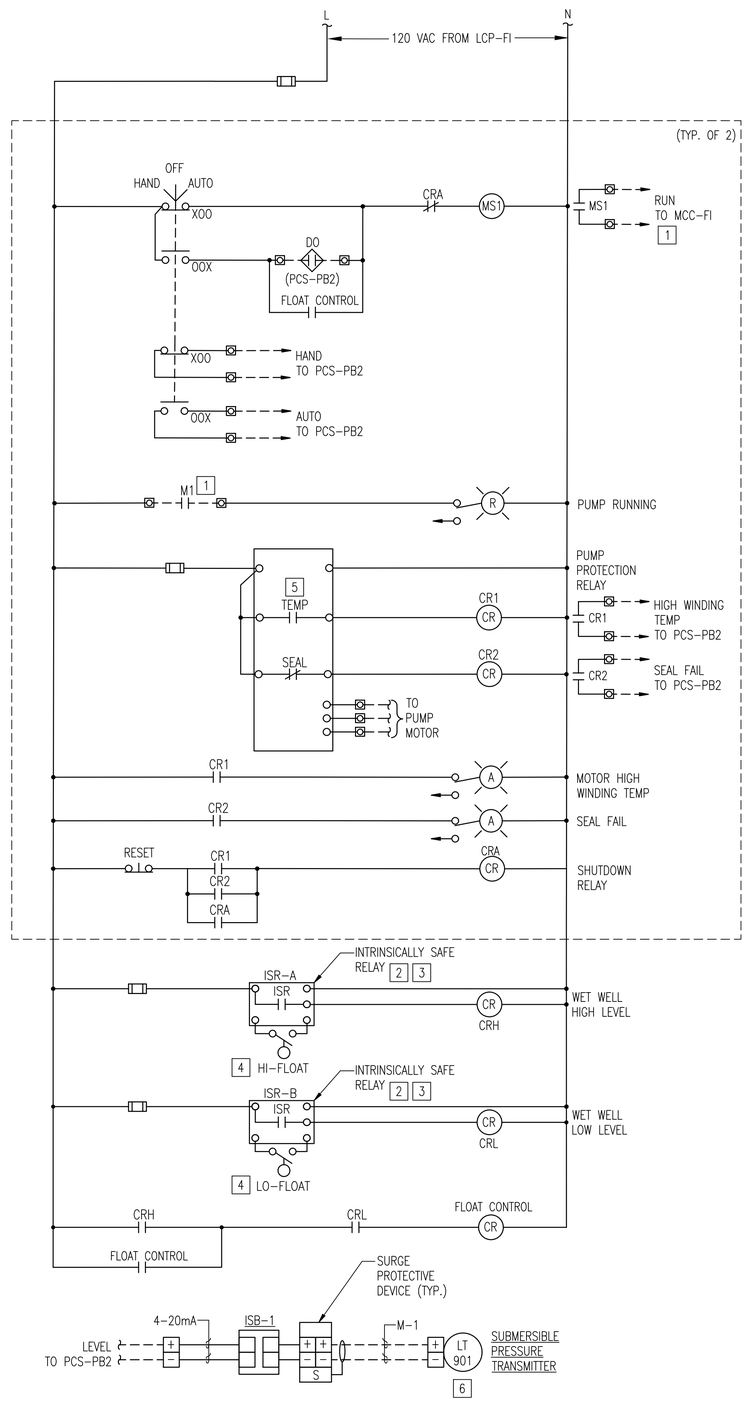

DRAINAGE PUMPS
ELEMENTARY CONTROL DIAGRAM

3 / I09.07 SCALE: NONE
(FIPS-DP-101 SHOWN, TYP. FOR FIPS-DP-102)

GENERAL NOTES

1. SEE I&C SYMBOLS, LEGENDS AND ABBREVIATIONS SHEET FOR DETAILS.

X SPECIFIC NOTES

1. MOTOR STARTER CIRCUIT LOCATED IN MCCFI.
2. ALL INTRINSICALLY SAFE BARRIERS AND RELAYS SHALL BE MOUNTED IN SAME LOCATION WITHIN PUMP STATION CONTROL PANEL, AND SHALL BE PHYSICALLY SEPARATED BY METAL FROM CONTROL PANEL COMPONENTS. PROVIDE PERMANENT NAMEPLATE IN ACCORDANCE WITH UL-698A AT LOCATION INDICATING:

   "INTRINSICALLY SAFE RELAYS AND CIRCUITRY"
3. INTRINSICALLY SAFE WIRING CIRCUITS SHALL ENTER CONTROL PANEL AT SAME LOCATION, SHALL BE PHYSICALLY SEPARATED FROM ALL OTHER PANEL WIRING BY A MINIMUM OF 2 INCHES, AND SHALL BE INSTALLED IN ACCORDANCE WITH APPLICABLE NEC AND UL-698A REQUIREMENTS.
4. LEVEL FLOATS SHALL BE WATERTIGHT, 316 STAINLESS STEEL, TEFLON COATED, DIRECT ACTING SWITCH TYPE WITH INTEGRAL CABLE (SIZED AS REQUIRED).
5. NORMAL CONDITION - TEMPERATURE CONTACT AND SEAL FAIL CONTACT ARE OPEN IN NORMAL CONDITIONS. TEMPERATURE CONTACT IS CLOSED UPON OVERTEMP. CONDITION & SEAL FAIL CONTACT IS CLOSED UPON SEAL FAIL CONDITION.
6. INTRINSICALLY SAFE BARRIERS FOR LEVEL TRANSDUCER CIRCUITS SHALL BE BY SAME MANUFACTURER AS TRANSDUCERS AND COMPATIBLE WITH THE TRANSDUCERS. ISBR SHALL PROVIDE UL LISTED INTRINSICALLY SAFE CIRCUIT AND BARRIER FOR WIRING FROM TRANSMITTER LOCATED IN CLASS I, DIVISION 1 GROUP D, HAZARDOUS LOCATION. ROVIDE GROUNDING OF ISBS IN ACCORDANCE WITH MANUFACTURER'S INSTRUCTIONS.

REVISIONS		

CLIENT INFORMATION

SUSSEX COUNTY, DE
ENGINEERING
DEPARTMENT

INLAND BAYS RWF
PHASE #2 EXPANSION:
CONTRACT S19-10

KEY PLAN

GRAPHIC SCALES

SIGNATURE



Whitman, Requardt & Associates, LLP
801 South Caroline Street, Baltimore, Maryland 21231

DRAINAGE
PUMPING STATION
CONTROL DIAGRAMS

DRAWING NO.

I09.07

SCALE: AS SHOWN		
DATE: JULY 2019	SHEET 212 OF 229	
DES: JJN	DRAWN: JJN	CHECK: PWG

PLOT DATE: 7/10/2019 12:52:25 PM PAGE SETUP ---- PLOT STYLE: VRA_2004.CTB PAPER SIZE:ARCH FULL BLEED D (36.00 X 24.00 INCHES)

N:\14256-026\CADD\14256026A00-051.dwg-26x\CADD\1425602600-051.dwg

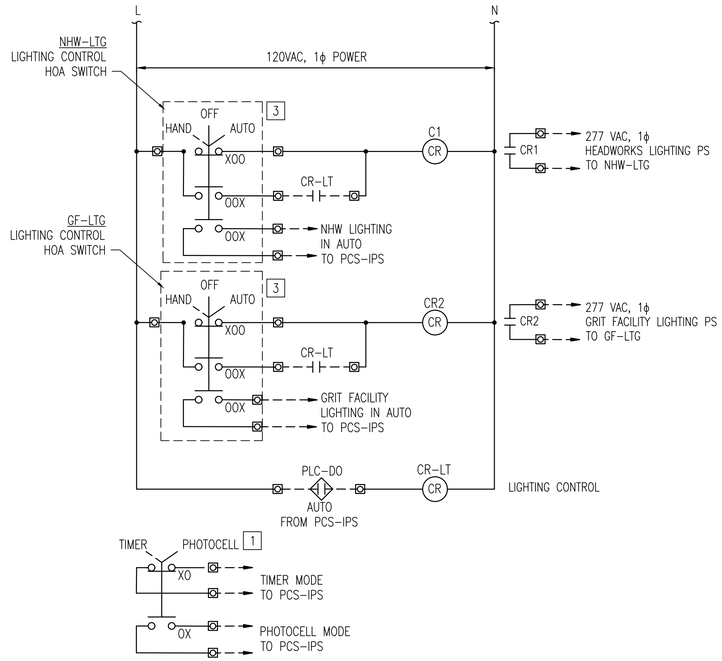

1
I09.08

FILTER IRRIGATION PUMP STATION LIGHTING CONTROL ELEMENTARY

SCALE: NONE

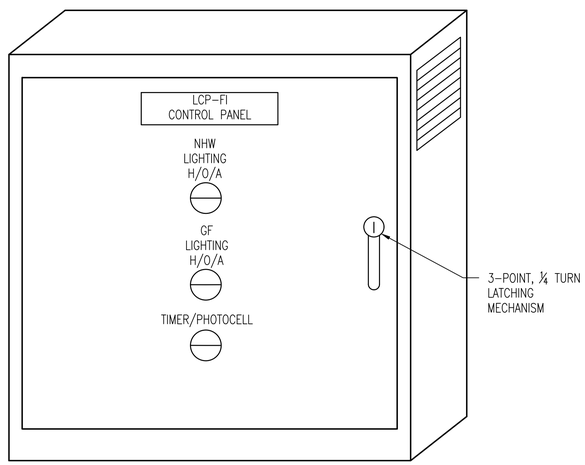

2
I09.08

FILTERED IRRIGATION PUMPING STATION LIGHTING PANEL ELEVATION

SCALE: NONE

GENERAL NOTES

1. SEE I&C SYMBOLS, LEGENDS AND ABBREVIATIONS SHEET FOR DETAILS.
2. SEE ELECTRICAL DRAWINGS FOR ADDITIONAL INSTALLATION AND EQUIPMENT REQUIREMENTS.

[X] SPECIFIC NOTES

1. WALL MOUNTED PHOTOCELL: MOUNT OUTSIDE OF FILTERED IRRIGATION PUMP STATION AS INDICATED ON THE ELECTRICAL DRAWINGS.
2. DEVICE/COMPONENT IS LOCATED ADJACENT TO PROCESS EQUIPMNET IN THE FIELD. REFER TO INSTRUMENTATION & ELECTRICAL PLAN DRAWINGS FOR LOCATION.

REVISIONS

CLIENT INFORMATION

SUSSEX COUNTY, DE
ENGINEERING
DEPARTMENT

INLAND BAYS RWF
PHASE #2 EXPANSION:
CONTRACT S19-10

KEY PLAN

GRAPHIC SCALES

0 1' 2' 3' 5'

SCALE: 3/8" = 1'-0"

SIGNATURE



Whitman, Requardt & Associates, LLP
801 South Caroline Street, Baltimore, Maryland 21231

FILTERED IRRIGATION BUILDING
LIGHTING CONTROL DIAGRAMS

DRAWING NO.

I09.08

SCALE: Drawing Scale		
DATE: JULY 2019	SHEET 213 OF 229	
DES: JJN	DRAWN: JJN	CHECK: PWG

N:\14256-028\CADD\14256028I09-08.dwg

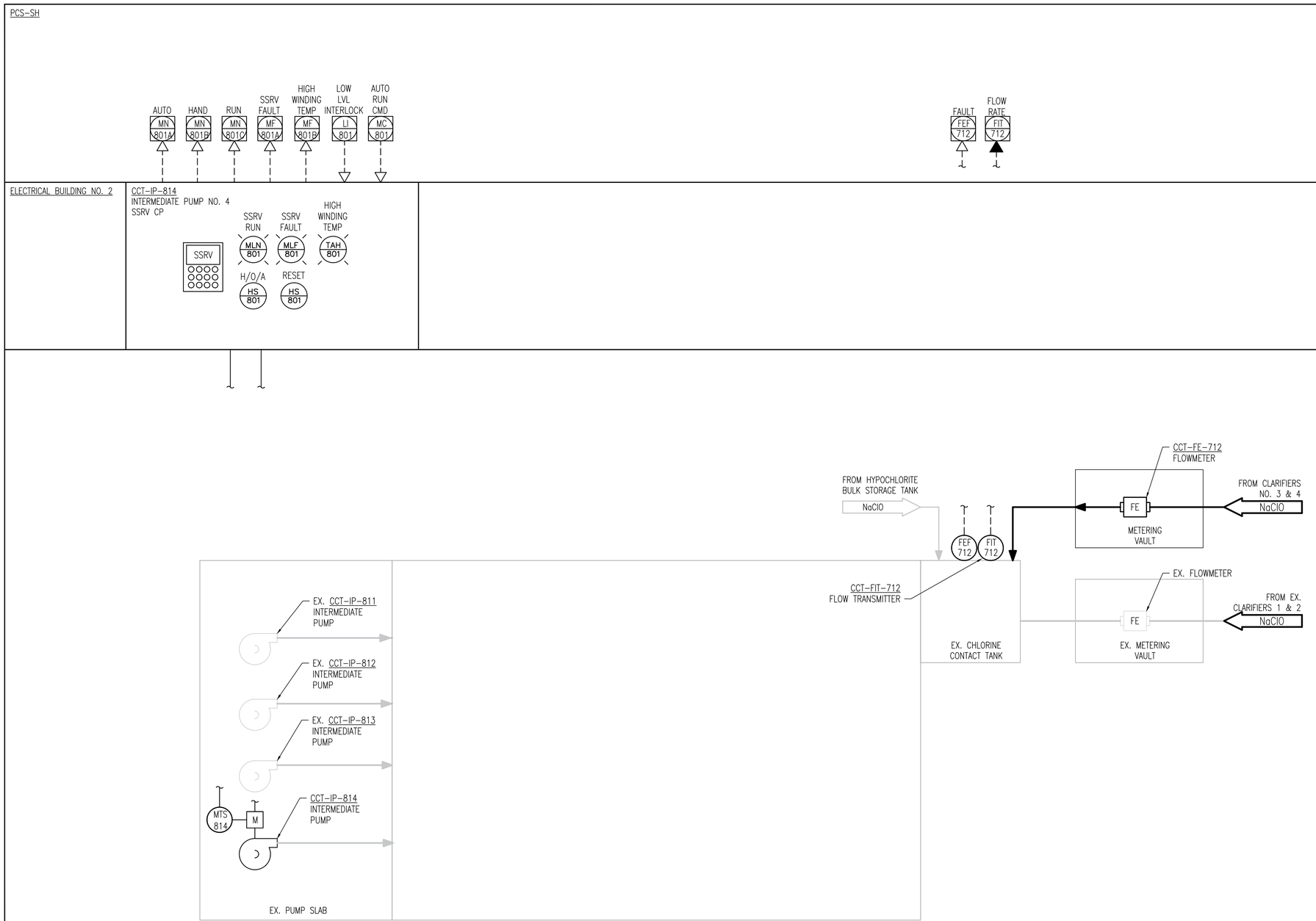

CHLORINE CONTACT TANK & METERING VAULT TANK P&ID

1 / I10.01 SCALE: NONE

GENERAL NOTES

1. SEE I&C SYMBOLS, LEGENDS AND ABBREVIATIONS SHEET FOR DETAILS.
2. P&ID SHOWN TO INDICATE CONTROL SYSTEM REQUIREMENTS AND DOES NOT REPRESENT A COMPLETE REFLECTION OF ALL PROCESS SYSTEM REQUIREMENTS. SEE MECHANICAL DRAWINGS FOR ADDITIONAL REQUIREMENTS.

REVISIONS

CLIENT INFORMATION

SUSSEX COUNTY, DE
ENGINEERING DEPARTMENT

INLAND BAYS RWF
PHASE #2 EXPANSION:
CONTRACT S19-10

KEY PLAN

GRAPHIC SCALES

SIGNATURE



Whitman, Requardt & Associates, LLP
801 South Caroline Street, Baltimore, Maryland 21231

CHLORINE CONTACT TANK
P&ID

DRAWING NO.
I10.01

SCALE: AS SHOWN
DATE: JULY 2019 | SHEET 214 OF 229
DES: JJN | DRAWN: JJN | CHECK: PWG

N:\14256-026\CADD\14256026I10-01.dwg

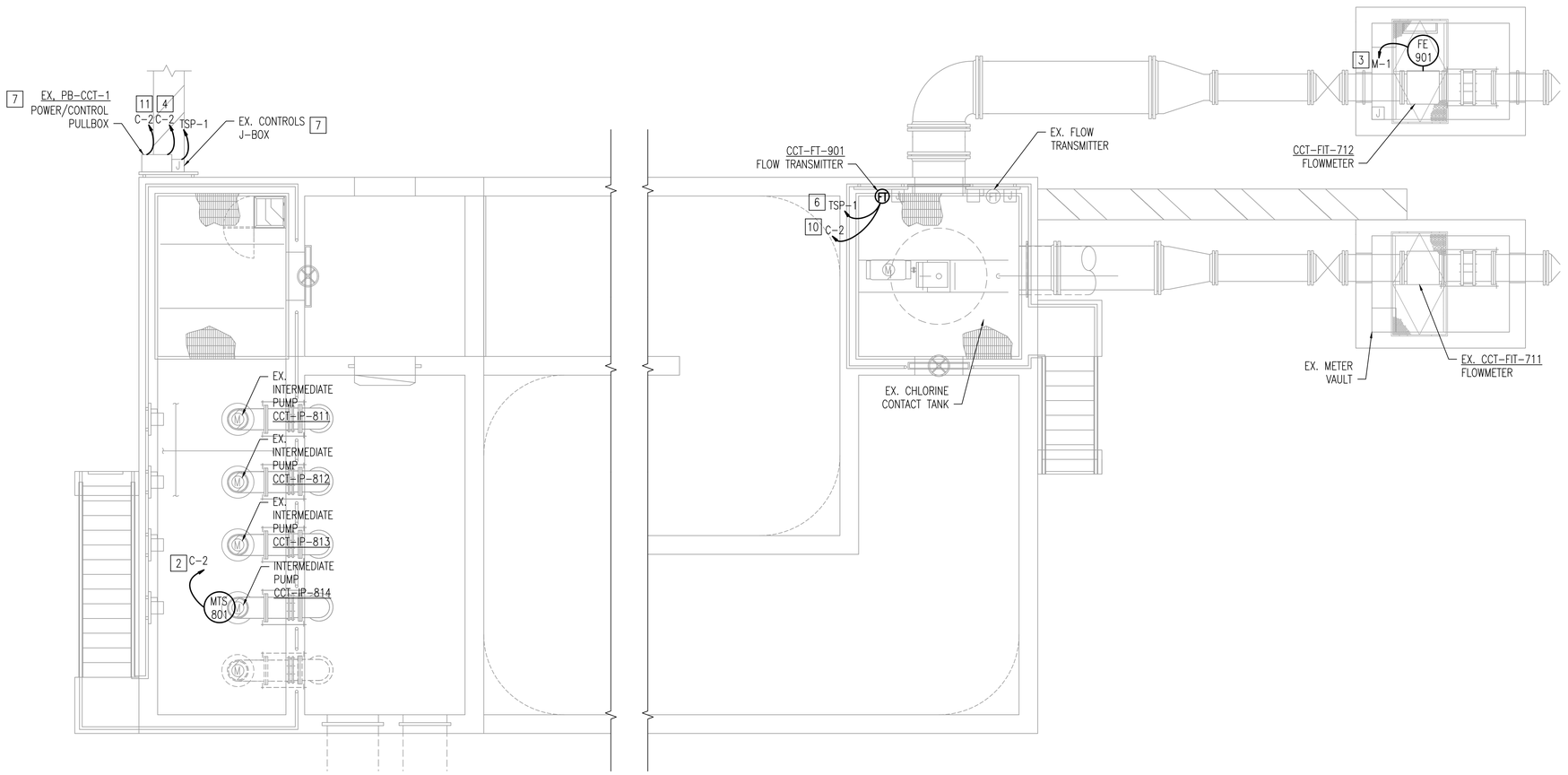

1 / I10.02 CHLORINE CONTACT TANK & METER VAULT PLAN
SCALE: 1/4" = 1'-0"

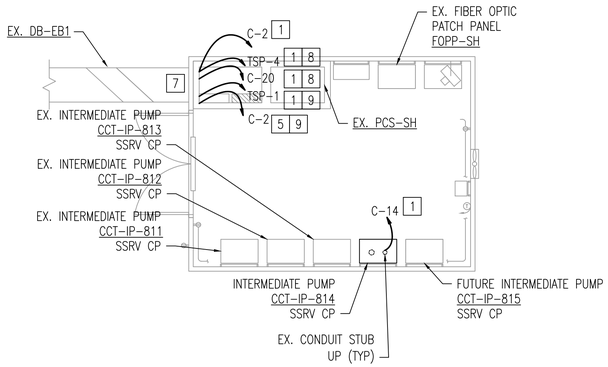

3 / I10.02 EX. ELECTRICAL BUILDING NO. 2 PLAN
SCALE: 1/4" = 1'-0"

GENERAL NOTES

1. SEE I&C SYMBOLS, LEGENDS AND ABBREVIATIONS SHEET FOR DETAILS.
2. SEE ELECTRICAL DRAWINGS FOR ADDITIONAL INSTALLATION AND EQUIPMENT REQUIREMENTS.

X SPECIFIC NOTES

1. TERMINATE CONDUIT AND CONDUCTORS AT EX. PROCESS CONTROL SYSTEM CABINET, PCS-SH.
2. ROUTE CONDUIT AND CONDUCTORS VIA EX. PB-CCT-1 TO CCT-IP-814 THROUGH EX. DUCTBANK.
3. TERMINATE CONDUIT AND CONDUCTOR AT ASSOCIATED FLOW TRANSMITTER.
4. TO CCT-IP-814 SSRV CP IN EX. ELECTRICAL BUILDING NO. 2 THROUGH CONCRETE ENCASED CONDUIT.
5. TERMINATE CONDUIT AND CONDUCTORS AT CCT-IP-814 SSRV CP. ROUTE CONDUIT VIA EXISTING UNDERGROUND CONDUIT AND STUB UP. EXTEND CONDUIT FROM THE FLOOR TO THE BASE OF THE CONTROL PANEL.
6. ROUTE CONDUIT AND CONDUCTORS BELOW GRATING ALONSIDE EX. CONDUITS TO EX. CONTROLS J-BOX.
7. ANALOG AND DIGITAL CONTROL SIGNAL WIRING SHALL BE ROUTED IN SEPARATE DEDICATED CONDUITS. ANALOG SIGNAL CONDUIT SHALL BE GROUNDED TO ISOLATE AGAINST ELECTRICAL NOISE.
8. PULL NEW CONDUCTORS FROM CHEMICAL FEED PUMPS SHF-SHP-904 & SHF-SHP-905 THROUGH EXISTING DUCTBANK DB-SH1 AND THROUGH EX. DUCTBANK DB-EB1 TO PSC-SH.
9. FROM CHLORINE CONTACT TANK & METERING VAULT TO PCS-SH.
10. ROUTE CONDUIT AND CONDUCTORS BELOW GRATING ALONGSIDE EX. CONDUITS TO EX. POWER/CONTROLS PULLBOX.
11. TO PCS-SH IN EX. ELECTRICAL BUILDING NO. 2 THROUGH CONCRETE ENCASED CONDUIT.

REVISIONS		

CLIENT INFORMATION

SUSSEX COUNTY, DE
ENGINEERING
DEPARTMENT

INLAND BAYS RWF
PHASE #2 EXPANSION:
CONTRACT S19-10

KEY PLAN

GRAPHIC SCALES

0 2' 4' 8'
SCALE: 1/4" = 1'-0"

SIGNATURE



Whitman, Requardt & Associates, LLP
801 South Caroline Street, Baltimore, Maryland 21231

CHLORINE CONTACT TANK
PLAN

DRAWING NO.

I10.02

SCALE: AS SHOWN		
DATE: JULY 2019		SHEET 215 OF 229
DES: JJN	DRAWN: JJN	CHECK: PWG

PLOT DATE: 7/10/2019 12:52:24 PM PAGE SETUP: WRA-PDF (36X24) PLOT STYLE: WRA_2006.CTB PAPER SIZE:ARCH FULL BLEED D (36.00 X 24.00 INCHES)
N:\Projects\1425\1425-0020\CAD\Arch\425002010-02.dwg
PLOTTED BY: Jeffrey J. Nelson

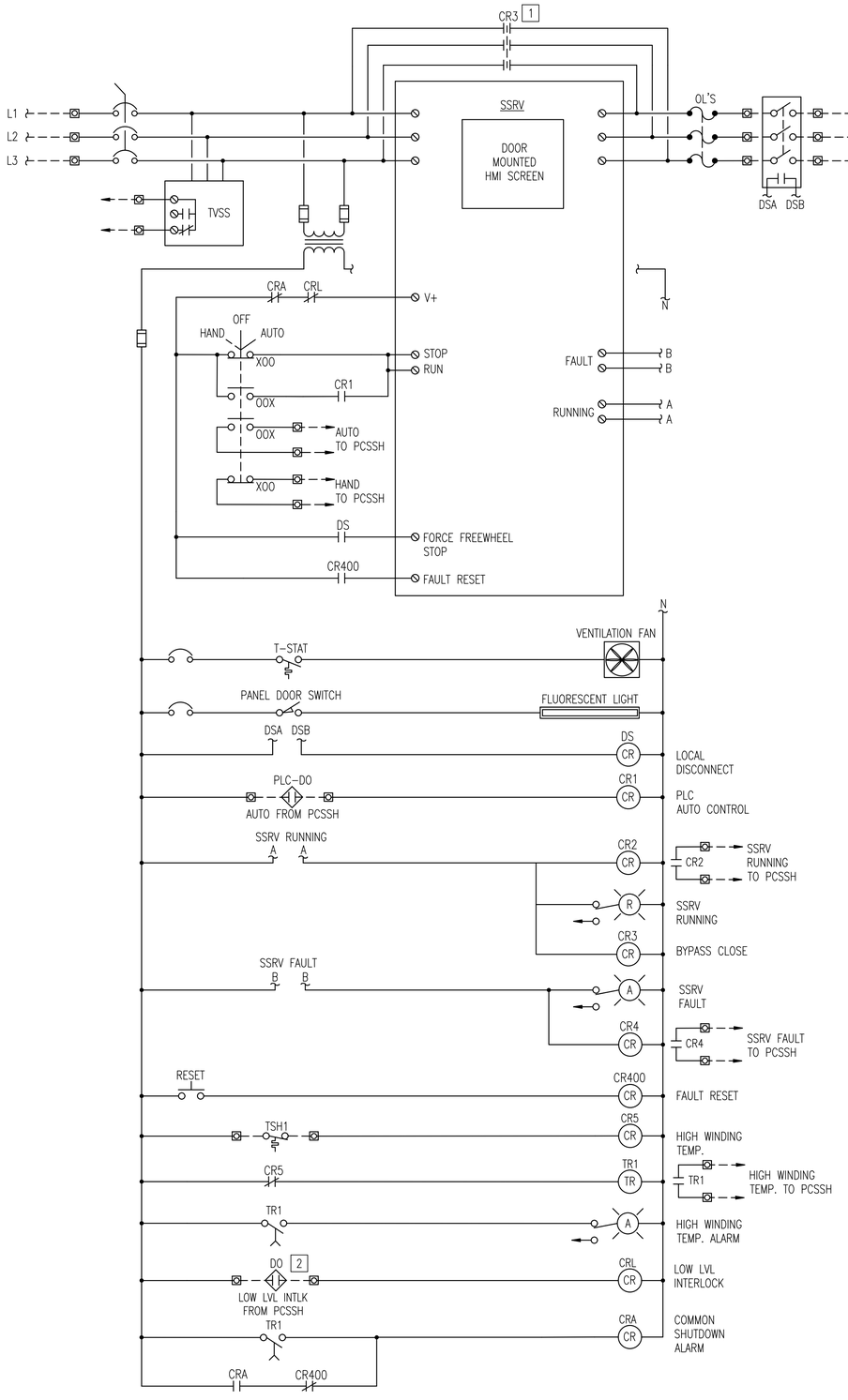

INTERMEDIATE PUMPS
1 I10.03 SSRV ELEMENTARY CONTROL DIAGRAM
SCALE: NONE

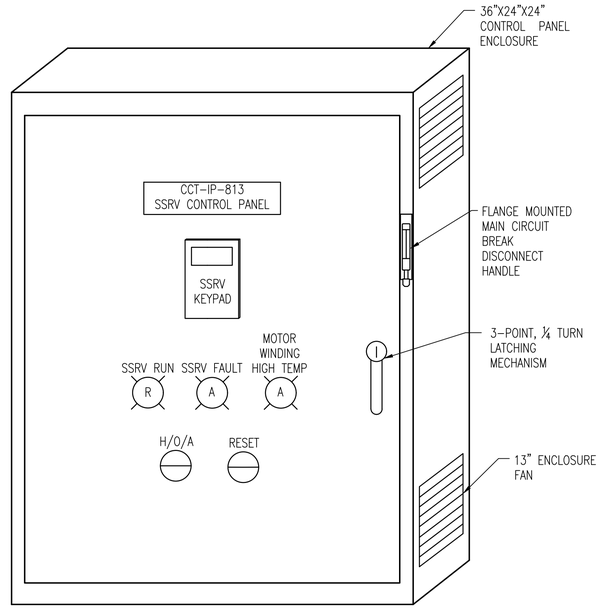

INTERMEDIATE PUMP
2 I10.03 SSRV PANEL ELEVATION
SCALE: NONE

GENERAL NOTES

1. SEE I&C SYMBOLS, LEGENDS AND ABBREVIATIONS SHEET FOR DETAILS.
2. SEE ELECTRICAL DRAWINGS FOR ADDITIONAL INSTALLATION AND EQUIPMENT REQUIREMENTS.
3. UNLESS OTHERWISE INDICATED, ALL CONDUIT AND CONDUCTOR SHALL BE TERMINATED AT CONTROL MARSHALLING PANEL.

X SPECIFIC NOTES

1. SHORTING CONTACTOR: CONTRACTOR SHALL PROVIDE SHORTING CONTACTOR IF THE SSRV DOES NOT HAVE AN INTERNAL BYPASS CONTACTOR. CONTROL WIRING SHALL BE DONE PER MFR'S STANDARDS.
2. EXISTING RELAY CONTACT LOCATED IN PCS-SH. ANY ADDITIONAL WIRING AND/OR CONTROLS REQUIREMENTS FOR INTEGRATION WITH EXISTING PCS-SH SHALL BE THE RESPONSIBILITY OF THE CONTRACTOR.

REVISIONS

CLIENT INFORMATION

SUSSEX COUNTY, DE ENGINEERING DEPARTMENT

INLAND BAYS RWF PHASE #2 EXPANSION: CONTRACT S19-10

KEY PLAN

GRAPHIC SCALES

0 1' 2' 3' 5'
SCALE: 3/8" = 1'-0"

SIGNATURE



WRA
Whitman, Requardt & Associates, LLP
801 South Caroline Street, Baltimore, Maryland 21231

CHLORINE CONTACT TANK CONTROL DIAGRAMS

DRAWING NO.
I10.03

SCALE: NONE		
DATE: JULY 2019	SHEET 216 OF 229	
DES: JJN	DRAWN: JJN	CHECK: PWG

N:\14256-026\CADD\14256026I10-03.dwg

GENERAL NOTES

1. SEE I&C SYMBOLS, LEGENDS AND ABBREVIATIONS SHEET FOR DETAILS.
2. SEE ELECTRICAL DRAWINGS FOR ADDITIONAL INSTALLATION AND EQUIPMENT REQUIREMENTS.
3. UNLESS OTHERWISE INDICATED, ALL CONDUIT AND CONDUCTOR SHALL BE TERMINATED AT PROCESS CONTROL SYSTEM PANEL, PCS-SH.
4. PROVIDE ADDITIONAL I/O MODULES AS REQUIRED FOR ANALOG AND DIGITAL SIGNALS IN PANEL PCS-SH.

X SPECIFIC NOTES

1. TERMINATE CONDUCTORS AT PCS-SH IN EX. ELECTRICAL BUILDING NO. 2. ROUTE CABLES THROUGH THE EXISTING INSTRUMENTATION AND CONTROL WIREWAY AND DUCTBANK TO ELECTRICAL BUILDING 2.

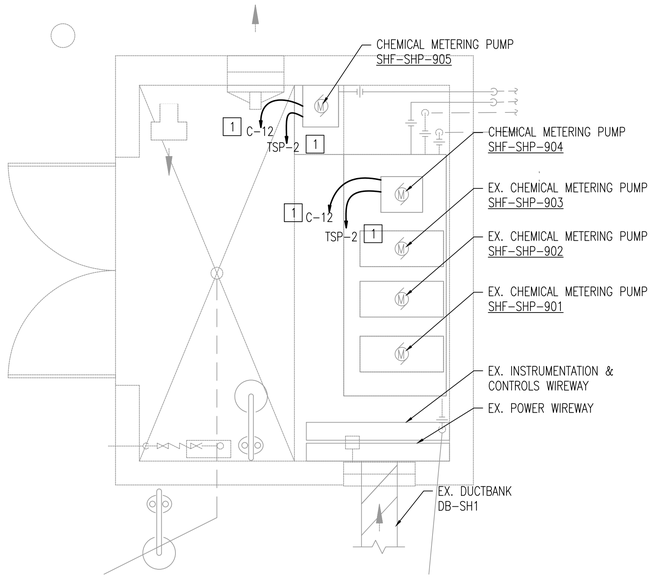

1 / I11.01 EXISTING CHEMICAL BUILDING PLAN
SCALE: 1/2" = 1'-0"

REVISIONS

CLIENT INFORMATION

SUSSEX COUNTY, DE
ENGINEERING
DEPARTMENT

INLAND BAYS RWF
PHASE #2 EXPANSION:
CONTRACT S19-10

KEY PLAN

GRAPHIC SCALES

0 1' 2' 4'
SCALE: 1/2" = 1'-0"

SIGNATURE

PADRAIC WILLIAM RAY
LICENSE
No. 16620
DELAWARE
PROFESSIONAL ENGINEER
7/11/2019

Whitman, Requardt & Associates, LLP
801 South Caroline Street, Baltimore, Maryland 21231

EXISTING
CHEMICAL BUILDING PLAN

DRAWING NO.

I11.01

SCALE: AS SHOWN		
DATE: JULY 2019	SHEET 217 OF 229	
DES: JJN	DRAWN: JJN	CHECK: PWG

PLOT DATE: 7/10/2019 12:52:39 PM PAGE SETUP: WRA-PDF (36X24) PLOT STYLE: WRA_2006.CTB PAPER SIZE:ARCH FULL BLEED D (36.00 X 24.00 INCHES)

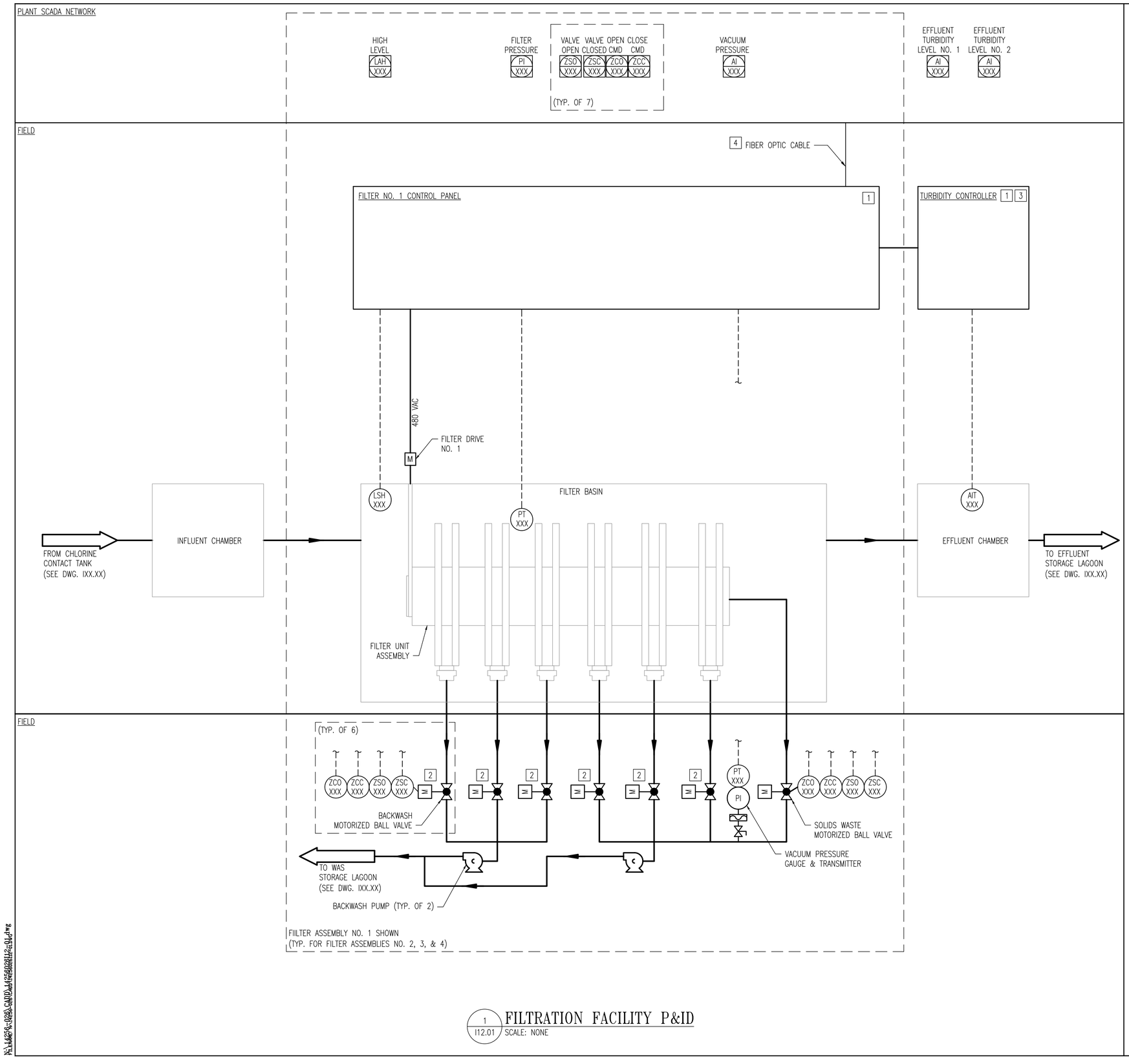

1 / I12.01 FILTRATION FACILITY P&ID
SCALE: NONE

GENERAL NOTES

1. SEE I&C SYMBOLS, LEGENDS AND ABBREVIATIONS SHEET FOR DETAILS.
2. P&ID SHOWN TO INDICATE CONTROL SYSTEM REQUIREMENTS AND DOES NOT REPRESENT A COMPLETE REFLECTION OF ALL PROCESS SYSTEM REQUIREMENTS. SEE MECHANICAL DRAWINGS FOR ADDITIONAL REQUIREMENTS.
3. REFER TO ELECTRICAL & MECHANICAL DRAWINGS FOR ADDITIONAL INSTALLATION, LOCATIONS, AND EQUIPMENT REQUIREMENTS.
4. NOT ALL REQUIRED I/O SHOWN FOR CLARITY. REFER TO CONTROL NARRATIVE IN CONTRACT SPECIFICATIONS FOR ADDITIONAL REQUIREMENTS.

X SPECIFIC NOTES

1. PANEL PROVIDED BY MANUFACTURER AND INSTALLED BY CONTRACTOR.
2. INSTRUMENT/DEVICE PROVIDED BY MANUFACTURER AND INSTALLED BY CONTRACTOR. WIRING, CONDUIT, AND WIRE TERMINATIONS SHALL BE THE RESPONSIBILITY OF THE CONTRACTOR.
3. TURBIDITY CONTROLLER IS POWERED FROM 2 OF THE 4 FILTER CONTROL PANELS. COORDINATE CONNECTIONS WITH MANUFACTURER. FILTER CONTROL PANEL PLC'S SHALL BE PROGRAMMED TO TRANSMIT TURBIDITY SIGNALS FROM THE FILTER CONTROL PANELS TO THE PLANT NETWORK.
4. FILTER MAIN CONTROL PANELS SHALL BE CONNECTED TO THE PLANT NETWORK VIA FIBER OPTIC CONNECTION. REFER TO NETWORK ARCHITECTURE FOR DETAILS.

REVISIONS

CLIENT INFORMATION

SUSSEX COUNTY, DE ENGINEERING DEPARTMENT

INLAND BAYS RWF PHASE #2 EXPANSION: CONTRACT S19-10

KEY PLAN

GRAPHIC SCALES

0 1' 2' 4'
SCALE: 1/2" = 1'-0"

SIGNATURE

PATRICK WILLIAM GRACE LICENSE NO. 10620 STATE OF DELAWARE PROFESSIONAL ENGINEER 7/11/2019

WRA
Whitman, Requardt & Associates, LLP
801 South Caroline Street, Baltimore, Maryland 21231

FILTRATION FACILITY P&ID

DRAWING NO.

I12.01

SCALE: AS SHOWN		
DATE: JULY 2019	SHEET 227 OF 229	
DES: JJN	DRAWN: JJN	CHECK: PWG

PLOT DATE: 7/10/2019 12:52:41 PM PAGE SETUP: VRA-PDF C36X24O PLOT STYLE: VRA_2006.CTB PAPER SIZE:ARCH FULL BLEED D (36.00 X 24.00 INCHES)
N:\1875\6-1229\CADD\14556\I12.01.dwg

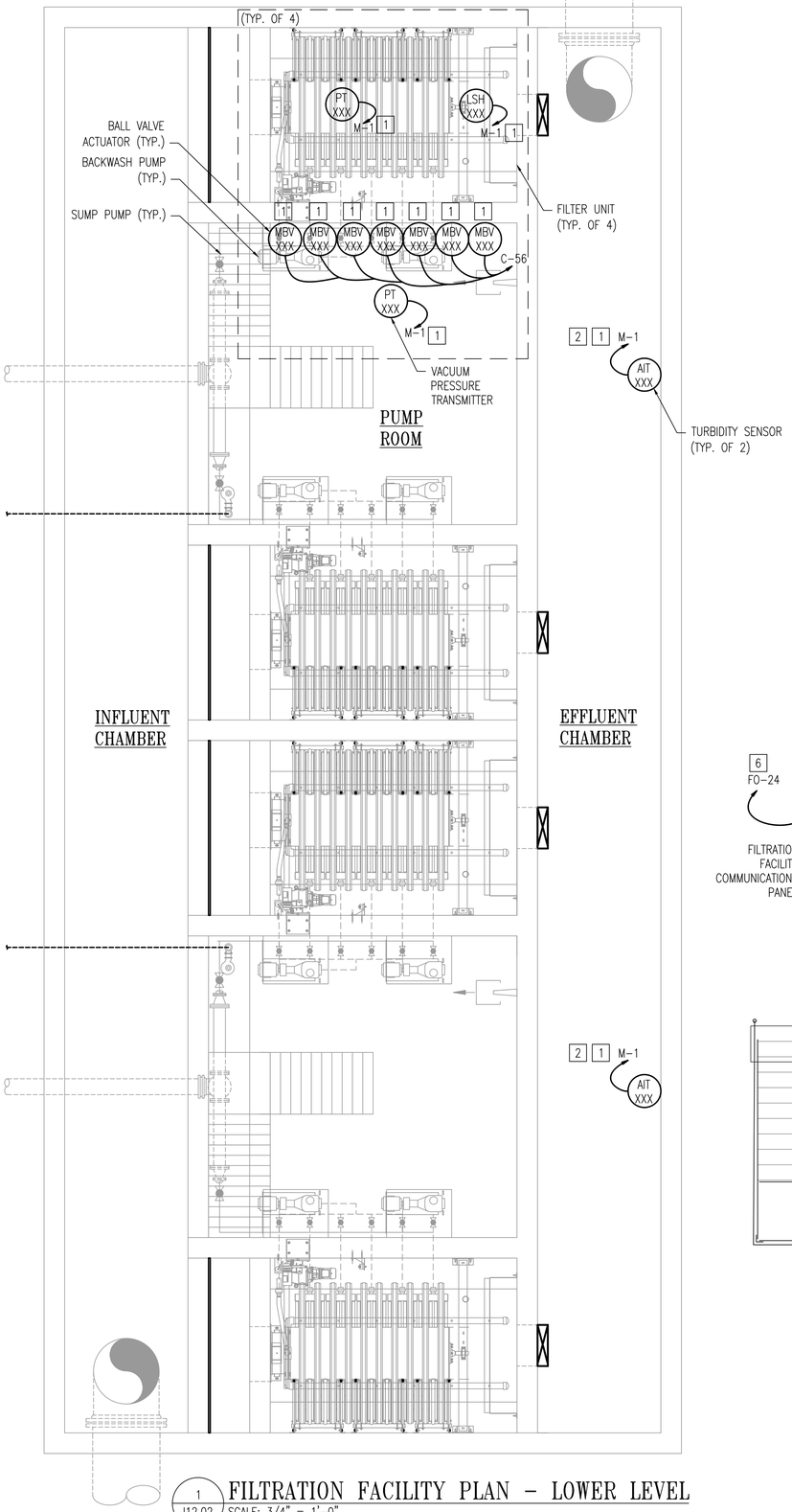

1 I12.02 FILTRATION FACILITY PLAN – LOWER LEVEL
SCALE: 3/4" = 1'-0"

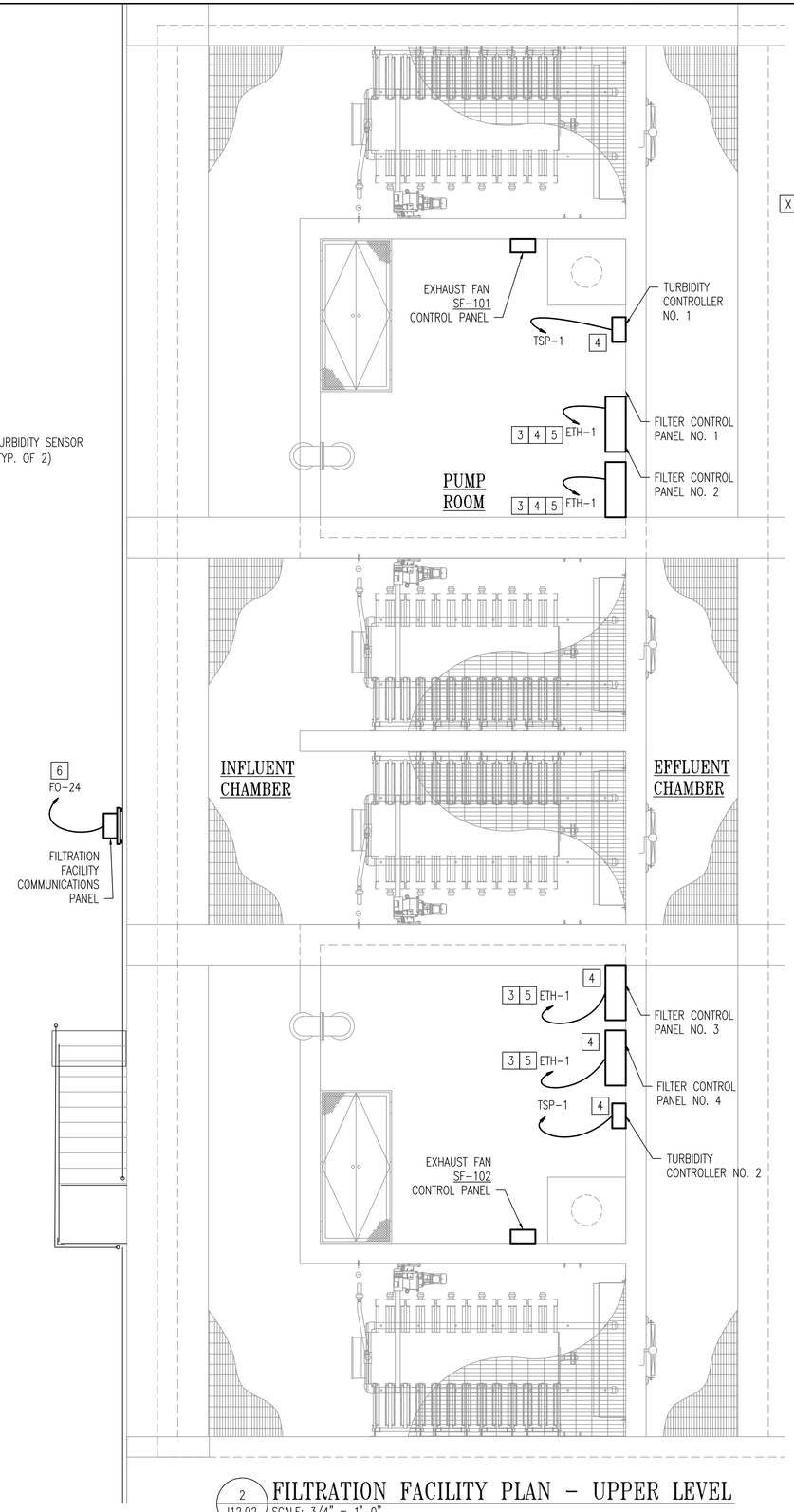

2 I12.02 FILTRATION FACILITY PLAN – UPPER LEVEL
SCALE: 3/4" = 1'-0"

GENERAL NOTES

1. SEE I&C SYMBOLS, LEGENDS AND ABBREVIATIONS SHEET FOR DETAILS.
2. SEE ELECTRICAL DRAWINGS FOR ADDITIONAL INSTALLATION AND EQUIPMENT REQUIREMENTS.
3. UNLESS OTHERWISE INDICATED, ALL CONDUIT AND CONDUCTOR SHALL BE TERMINATED AT THE RESPECTIVE FILTER CONTROL PANEL.

X SPECIFIC NOTES

1. INSTRUMENT/DEVICE PROVIDED BY MANUFACTURER AND INSTALLED BY CONTRACTOR. WIRING, CONDUIT, AND WIRE TERMINATIONS SHALL BE THE RESPONSIBILITY OF THE CONTRACTOR.
2. TERMINATE CONDUIT AND CONDUCTORS AT ASSOCIATED TURBIDITY TRANSMITTER.
3. CONTROL PANEL LOCATION SHOWN DIAGRAMATICALLY. COORDINATE PANEL LOCATION WITH FILTER SYSTEM MANUFACTURER.
4. PANEL PROVIDED BY MANUFACTURER AND INSTALLED BY CONTRACTOR.
5. TERMINATE AT FIBER OPTIC PATCH PANEL FOPP-FF.
6. TERMINATE AT FIBER OPTIC PATCH PANEL FOPP-G IN EX. EQUIPMENT STORAGE BUILDING. REFER TO NETWORK ARCHITECTURE AND FIBER OPTIC NETWORK PLAN FOR DETAILS.

REVISIONS

CLIENT INFORMATION

SUSSEX COUNTY, DE
ENGINEERING
DEPARTMENT

INLAND BAYS RWF
PHASE #2 EXPANSION:
CONTRACT S19-10

KEY PLAN

GRAPHIC SCALES

0 1' 2' 4'
SCALE: 1/2" = 1'-0"

SIGNATURE

PADRAIC WILLIAM RIA LICENSE No. 16620 DELAWARE PROFESSIONAL ENGINEER 7/11/2019

WRA
Whitman, Requardt & Associates, LLP
801 South Caroline Street, Baltimore, Maryland 21231

FILTRATION FACILITY PLAN

DRAWING NO.

I12.02

SCALE: AS SHOWN		
DATE: JULY 2019	SHEET 228 OF 229	
DES: JJN	DRAWN: JJN	CHECK: PWG

PLOT DATE: 7/10/2019 12:52:47 PM PAGE SETUP: WRA-PDF (36X24) PLOT STYLE: WRA_2006.CTB PAPER SIZE:ARCH FULL BLEED D (36.00 X 24.00 INCHES)

GENERAL NOTES

1. SEE I&C SYMBOLS, LEGENDS AND ABBREVIATIONS SHEET FOR DETAILS.

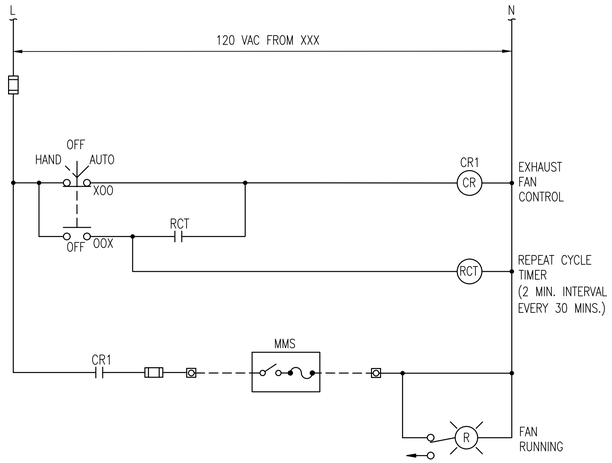

1 I12.03

FILTRATION FACILITY
EXHAUST FAN MOTOR STARTER ELEMENTARY
SCALE: NONE
(TYP. FOR EXHAUST FANS FF-EF-101 & FF-EF-102)

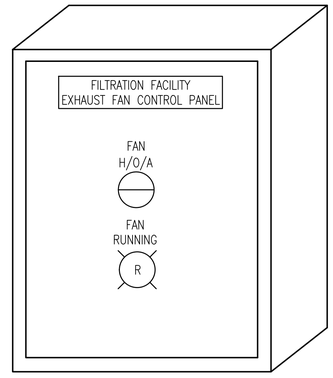

2 I12.03

FILTRATION FACILITY
EXHAUST FAN PANEL ELEVATION
SCALE: NONE
(TYP. FOR EXHAUST FANS FF-EF-101 & FF-EF-102)

REVISIONS

CLIENT INFORMATION

SUSSEX COUNTY, DE
ENGINEERING
DEPARTMENT

INLAND BAYS RWF
PHASE #2 EXPANSION:
CONTRACT S19-10

KEY PLAN

GRAPHIC SCALES

SIGNATURE

PADRAIC WILLIAM GRAY
LICENSE
No. 16620
7/11/2019
DELAWARE
PROFESSIONAL ENGINEER

Whitman, Requardt & Associates, LLP
801 South Caroline Street, Baltimore, Maryland 21231

FILTRATION FACILITY
EXHAUST FAN CONTROL DIAGRAMS

DRAWING NO.

I12.03

SCALE: AS SHOWN		
DATE: JULY 2019	SHEET 229 OF 229	
DES: JJN	DRAWN: JJN	CHECK: PWG

PLOT DATE: 7/10/2019 12:52:49 PM PAGE SETUP: ---- PLOT STYLE: WRA_2006.CTB PAPER SIZE:ARCH FULL BLEED D (36.00 X 24.00 INCHES)
N:\14256-026\CADD\142560026\I12-03.dwg