[Natural Minor]

Application Receipt Document

Submitted Date: 08/31/2026
Submitted Time: 01:13:19 AM

Profile

Company Name	Dearly Departed Crematory Services
Company Mailing Address	401 Cornell Drive
Company Mailing Address 2	J12
Company Mailing City	Wilmington
Company Mailing State	Delaware
Company Mailing Country	New Castle
Company Mailing Zip Code	19801
Registered Agent	A Registered Agent Inc
Devision of Corporation Number	9768720
Name of Owner or Facility Manager	[redacted]
Title of Owner or Facility Manager	[redacted]
Phone	8663765924
Fax	
Email	[redacted]
HAS THIS COMPANY BEEN ISSUED A PERMIT BY DNREC IN THE PREVIOUS 5 YEARS?	

Facility

Facility Name	Dearly Departed Crematory Services
Facility Mailing Address	
Facility Mailing Address 2	
Facility Mailing City	
Facility Mailing State	
Facility Mailing County	
Facility Mailing Zip Code	
Facility Physical Address	401 Cornell Drive, J12
Facility Physical Address 2	
Facility Physical City	Wilmington
Facility Physical State	Delaware
Facility Physical County	New Castle
Facility Physical Zip Code	19801
Facility Billing Contact Name	[redacted]
Facility Billing Contact Title	COO
Facility Billing Address	237 Murphy Drive
Facility Billing City	Middletown
Facility Billing State	Delaware
Facility Billing Zipcode	19709
Facility Billing Contact Phone	3022751809
Facility Billing Contact Fax	
Facility Billing Contact Email	[redacted]
Latitude	39.71519080066084
Longitude	-75.55476534411302

Facility NAICS Code

Code
812220

Facility SIC Code

Code
7261

Zoning

Upload proof of local zoning	20260409_06032026 (1).pdf , Addendum_Application_Notes_and_Clarifications (1).pdf
Is the facility located in the coastal zone?	no
Is a coastal zone permit required for construction or operation of the source being applied for?	
upload a copy of the coastal zone determination	
Has a coastal zone permit been issued?	
upload a copy of the coastal zone permit	

Permit

Permit Contact First Name	[redacted]
Permit Contact Last Name	[redacted]
Permit Contact Title	COO
Permit Contact Phone	3022751809
Permit Contact Fax	
Permit Contact Email	[redacted]

Community Outreach Information

Name	Title	Organization	Contact Phone	Contact Email
[redacted]	(retired) Founder & Executive Director	Southbridge Community Development Corporation (SCDC)	[redacted]	[redacted]
[redacted]	CEO and Founder	Community Advocate	[redacted]	[redacted]
[redacted]	Founder, President and CEO	DEBC	[redacted]	[redacted]
[redacted]	CEO and Founder	ESM	[redacted]	[redacted]

Proposed Construction and Operating Schedule Information

When will the proposed construction/installation/modification occur.

Start Date	12/01/2026	End Date	12/28/2026
Proposed Operating Schedule			
Max hours per day	12		
Max days per week	6		
Max weeks per year	52		
Is there any additional information regarding the operating schedule that should be considered relative to this application?	No		
Describe the Additional Information			

Flow Chain

Please upload a cover letter to accompany this application that describes in detail, the overall project goal(s) and any special circumstances to be considered.	Coverletter.docx
Please Upload a Process Flow Diagram	Technical Documents (1).pdf
Are you adding equipment or an isolated control device?	Equipment
Select Application Form	AQM 3.11
Enter the name of the equipment as you refer to it within your facility	Retort, processor and cooler
Define the venting method for this equipment	Vents directly into the Atmosphere
Is this equipment associated with any other permits ?	no
Please enter the applicable permit number(s) associated with this equipment.	

PROOF OF LOCAL ZONING

Marcus A. Henry
County Executive

David M. Culver
General Manager

New Castle County Department of Land Use

June 3, 2026

In reply, refer to:
2026-0409
301-701 Cornell Drive

[redacted]
237 Murphy Drive
MIddletown, DE 19709

Dear Applicant:

The New Castle County Department of Land Use is in receipt of your request for a verification of zoning and use for tax parcel numbers 10-005.20-003, which is located at 301-701 Cornell Drive in Wilmington, Delaware.

A review of the Official Zoning Map of New Castle County indicates the subject parcel is zoned **I (Industrial) which permits a variety of light industrial uses, such as crematories (**NAICS 812220) pursuant to Table 40.03.110 and Section 40.33.270.D of the New Castle County Code. No relevant variances, zoning or building violations were found for the subject property in a search of the tax parcel information system.

Please note that this property is located within a floodplain and contains wetlands, which could potentially limit development and new construction

A Record Resubdivision Plan for Lot #2 Cornell Park (Instrument Number 202204260044497) was recorded in the Office of the Recorder of the Deeds for New Castle County on April 26, 2022. The approval and recordation of this plan indicate compliance with the subdivision and zoning code regulations in effect at that time. A digital copy (PDF) of the record plan can be provided at the applicant's request. Any new construction or changes in use to that shown on the record plans will require compliance with current UDC regulations.

Please be advised that this letter only verifies whether the type of use that exists or is proposed on the site – to the extent you described it in your zoning verification application – is permitted, not permitted, or permitted under limited circumstances in the zoning district. <u>This letter is not a permit and does not offer any guarantee that any other required plans, applications, certifications, or variances for your project will be approved.</u>

If your project involves an expansion of the existing use, a change in use, alterations to the building or site, demolition, or new construction, one or more permits may be needed before you can initiate the use. The following is a summary of Department of Land Use permits, certificates, and plans that may be required for your project.

Any new use or change of use in an <u>existing building</u> may require:

1. **Limited Use Permit**. If the existing or proposed use is identified as a "limited use" on the first page of this letter you will need to apply for a Limited Use Permit. This application must be accompanied by a site plan, or other supporting documentation, demonstrating that the special standards for that use are met. Refer to Articles 3 and 31 of the Unified Development code for additional information.
2. **Certificate of Use**. To either institute a new use, or expand an existing use, in an existing building you must obtain a Certificate of Use. The Department will determine whether the building meets the building code and parking requirements for such use. Refer to Chapter 6 of the New Castle County Code (Building Code) for additional information.

Any new construction, or alteration or expansion of existing buildings and features on the site may require:

1. **Major or Minor Land Development Plan**. If your project will subdivide land or add more than 1,000 square feet of gross floor area, you must submit a major or minor land development plan. The plan will be reviewed for compliance with the land development criteria outlined in the Unified Development Code. During review of the plan, the Department may hold public hearings and may identify other applications, plans, studies, or permits that need to be submitted before development can commence. Refer to Article 31 of the Unified Development Code for general requirements.
2. **Parking Plan.** If your project requires installation, expansion, or reconfiguration of a parking lot, you will need to submit a parking plan. Refer to Articles 3 and 31 of the Unified Development Code for general requirements.
3. **Building Permit / Demolition Permit / Sign Permit**. If your project will involve altering or enlarging a building (including mechanical systems), demolishing all or part of a building, or installing new signs, you must obtain permits for those activities. During the review of these applications, the Department may identify other applications, plans, studies, or permits that need to be submitted before development can commence. Before the new or improved building can be inhabited, a **Certificate of Occupancy** must be secured from the Department. Refer to Chapter 6, Article 3 of the New Castle County Code (Building Code) for additional information.

This summary of Department of Land Use permit applications is intended only for general informational purposes and is not intended to be inclusive of the comprehensive requirements contained in the New Castle County Code. Please be advised that some of the review processes described above may also require recommendations or decisions from County boards (Planning Board, Historic Review Board, Board of Adjustment, and Resource Protection Area Technical Advisory Committee) or outside agencies. New Castle County must abide by regulations imposed on it by a variety of State and Federal agencies. Accordingly, any of the County permits described above may be subject to additional review processes that address environmental concerns; resource protection; public health, safety, and welfare; and a variety of other issues. In some cases, landowners may need to address the requirements of those agencies independently.

Landowners contemplating a change of use, future development, or alterations to buildings and land are encouraged to engage the services of an engineer, land surveyor, and/or attorney for advice on any physical constraints that may limit development of the property, and guidance on what permits may be needed to commence a new use or development.

General questions regarding the plan review process; building, demolition, and sign permits; and Certificates of Use/Occupancy, can be answered by the Department at 395-5400. Copies of documents such as certificates of occupancy or code violations may be obtained, where

applicable and available, by submitting an Information Request Form (FOIA). The form is available online at www.newcastlede.gov . Thank you for your attention to this matter.

Sincerely,



Gregory Friedman
Planner I

Addendum — Application Notes and Clarifications

Attachment to Delaware ePermitting — Air Quality Natural Minor Sources Application

Facility:	Triple CCC Enterprises LLC, DBA Dearly Departed Crematory Services
Facility Location:	401 Cornell Drive, Unit J12, Wilmington, DE 19801
Equipment ID:	01
Manufacturer / Model:	Matthews Environmental Solutions — Power-Pak I (IE43-PPI)
Date:	8/28/2026

This addendum documents ten items encountered while completing this application through Delaware's ePermitting portal. Five relate to limitations of locked, fixed-option, or malfunctioning fields in the online system; one clarifies the status of on-site remains storage equipment; one clarifies the relationship between the facility's access schedule and the equipment's permitted operating schedule; one requests written confirmation regarding pre-permit delivery and storage of the crematory unit; one discloses the issuance date of the enclosed Certificate of Good Standing; and one discloses the basis for the distance-to-property-line figure provided on Form AQM-3.11. None of these items affect the emissions basis, equipment specifications, or operating schedule presented elsewhere in this application.

1. Flow Chain Section Naming

The "Flow Chain" section of this application was labeled at the time of entry as:

"AQM-3.11 Retort, processor and cooler"

This label does not accurately describe the equipment covered by this application, and the applicant is unable to edit it directly, as this section of the online application is now locked. The applicant requests this label be understood/corrected to read:

"AQM-3.11 – Crematory Retort (Equipment ID 01)"

This application covers a single regulated emission unit: the Matthews Power-Pak I crematory retort (Equipment ID 01), consisting of a primary and secondary combustion chamber venting through Stack/Emission Point 01. The cooler and processor referenced in the original label are downstream remains-handling equipment that do not combust fuel or vent to the atmosphere, and are not regulated emission units under this permit application.

2. "Maximum Amount Cremated Per Day" — Unit of Measure

This field is labeled "Maximum Amount Cremated Per Day," but the portal's unit-of-measure dropdown for this field offers only "Pounds/Hr" and "Tons/Hr" — there is no per-day option available. The value entered for this field, 1,800, represents pounds per day (150 lb/hr rated capacity × 12 hours/day operating schedule), consistent with the field's own label, and should not be read as 1,800 pounds per hour.

3. On-Site Storage Equipment — Vendor Under Consideration

The on-site storage capacity entered in this application (1,012 cubic feet) is based on a quote for a 16-body walk-in cooler system (Heatcraft/Climate Control, Quote ID R4187029). This reflects one option currently under consideration. The applicant may alternatively install two 4-body upright coolers, or a single 4-body upright cooler, from a different vendor (American Mortuary Coolers), depending on final vendor selection and cost. Final on-site storage equipment will be confirmed prior to installation. This equipment does not affect the emissions calculations or air permit basis presented in this application.

4. Company Name Field — Legal Entity Name

The "Company Name" field in this application displays:

"Dearly Departed Crematory Services"

This is the registered trade name (DBA) only. The applicant is unable to edit this field to include the full legal entity name, as this section of the online application is locked. The full legal name of the applicant entity is:

"Triple CCC Enterprises LLC, DBA Dearly Departed Crematory Services"

This full legal name is reflected consistently in the applicant's cover letter and other supporting documentation submitted with this application.

5. Facility Access Schedule vs. Equipment Operating Schedule

This facility operates as a third-party crematory service to licensed funeral homes and is not a walk-in facility open to the public; there is limited to no direct contact with members of the public. The facility intends to remain accessible 24 hours per day, 7 days per week, to receive remains and coordinate with funeral home partners around arrival timing and scheduling needs. This reflects the facility's access hours only and does not represent continuous operation of the crematory retort.

The Matthews Power-Pak I (IE43-PPI) operates on a discrete, per-body cycle: the unit is started, preheats, the body is loaded, cremation occurs, the unit enters a cooldown period, and the unit stops operating once cooldown is complete, at which point remains are removed and the unit is prepared for the next cycle. Only one body may be processed at a time.

The crematory retort will operate no more than 12 hours in any single day and process no more than 6 cremations in any single day. Total weekly retort operation will not exceed 72 hours (12 hours/day × 6 days/week), consistent with the 12 hours/day, 6 days/week, 52 weeks/year operating schedule reported on Form AQM-1, and the corresponding 1,800 lbs/day maximum throughput reported on Form AQM-3.11. Actual daily cremation volume will vary based on demand and may be distributed across any combination of days within the week, provided the weekly and daily limits above are not exceeded. These figures remain a conservative basis for Potential to Emit calculations pursuant to this application and are not exceeded by the facility's access schedule described above.

6. Request for Written Confirmation — Pre-Permit Equipment Delivery and Storage

Given that a construction permit for a natural minor source typically requires 90 days from receipt of a complete application, followed by additional manufacturer lead time to fabricate and deliver the crematory retort once ordered, the applicant respectfully requests written confirmation from the Department regarding the following proposed course of action, in order to mitigate the financial impact of sequential (rather than concurrent) procurement and permitting timelines on a new small business.

This timeline concern is not speculative. Under the applicant's executed lease proposal for the facility (dated June 12, 2026), Landlord has the right to terminate the lease if the required New Castle County and DNREC Air Quality Permit approvals are not secured within 100 days of the lease execution date. In addition, Base Rent under the lease begins accruing at 50% upon Tenant taking possession of the premises (Phase I Rent Commencement), and automatically escalates to 100% of Base Rent upon the earlier of 60 days following Phase I or the first day following Tenant's receipt of written notification that the DNREC permit is finalized. As a result, the applicant is incurring real, escalating rent obligations during the permitting period regardless of whether the crematory equipment has been delivered, installed, or is capable of generating revenue, making the sequencing of equipment procurement relative to permit issuance a material financial concern rather than a matter of convenience.

The applicant proposes to accept delivery of the Matthews Power-Pak I (IE43-PPI) unit to the facility while this application is pending Department review and approval, under the following conditions:

- The unit will remain in its original shrink-wrapped/crated condition as delivered by the manufacturer.
- The unit will not be connected to any natural gas supply line.
- The unit will not be connected to electrical service.
- The unit will not be connected to any stack or vent.
- The unit will not be erected, mounted, or otherwise physically installed.
- The unit will not be operated, tested, or debugged in any manner.
- No air contaminants will be capable of being emitted from the unit under these conditions.

The applicant has been advised by Matthews Environmental Solutions that the manufacturer is prepared to proceed with fabrication and shipment of the unit upon the applicant's receipt of written confirmation or a waiver from the Department permitting the delivery and storage arrangement described above. This request is made in reliance on that understanding, and the applicant is prepared to provide written confirmation from Matthews upon the Department's request.

The applicant notes that the natural gas utility service upgrade to the building (main and service line extension, independent of any connection to the crematory equipment) is being coordinated with the local gas utility as ordinary site

infrastructure work, separate from and not contingent upon the equipment-specific conditions above. The applicant understands, and this request does not seek to alter, that the final connection of gas service to the crematory retort itself will not occur until after Department approval, consistent with the conditions listed above.

Delaware's air permitting guidance (7 DE Admin. Code 1101, Section 2.0) defines "construction" as the fabrication, erection, or installation of a source, and 7 DE Admin. Code 1102, Section 2.1, prohibits initiating construction, installation, alteration, or operation of equipment prior to Department approval. The Department has also indicated, in published permitting guidance, that limited site work such as land clearing and grading may occur while a construction application is under review, and that it views the federal "begin actual construction" standard — physical on-site work of a permanent nature, such as building foundations — as complementary to its own construction definition. The applicant respectfully submits that delivery and enclosed on-site storage of an inert, non-connected, non-operating unit, without any erection, installation, foundation work, or utility connection, is consistent with the spirit of this guidance, but recognizes this determination rests with the Department.

Accordingly, the applicant requests written confirmation (or a formal waiver, if required) that the proposed delivery-and-storage arrangement described above does not constitute "construction," "installation," or "initiation of operation" under 7 DE Admin. Code 1101 and 1102, and does not require Department approval prior to occurring. Given the lease timeline described above, the applicant would greatly appreciate an expedited response to this specific item, and welcomes a call or a Draft Application Review Meeting with the assigned engineer to discuss this request and to confirm it will not jeopardize the pending application or the facility's Natural Minor Source status.

7. Certificate of Good Standing — Issuance Date

The Certificate of Good Standing (Certificate of Status) for Triple CCC Enterprises LLC enclosed with the Environmental Permit Application Background Statement (7 Del. C. Chapter 79) accompanying this application is dated June 17, 2025. The applicant has initiated a request to the Delaware Division of Corporations for a currently dated Certificate of Good Standing and will forward the updated certificate to the Department upon receipt. The applicant is not aware of any change in the entity's standing with the State of Delaware since the enclosed certificate was issued.

8. Facility Mailing Address Field — Displays as "Undefined"

The "Facility Mailing Address" field in this application displays as:

"undefined, undefined, undefined, undefined, undefined"

The applicant is unable to edit or correct this field, as this section of the online application is locked. The correct facility mailing address is:

401 Cornell Drive, Unit J12, Wilmington, DE 19801

This is the same address reflected as the Facility Physical Location elsewhere in this application and in the applicant's cover letter and other supporting documentation.

9. "How Does the Process Equipment Vent" — No Direct Option Available

This question offers two options: "Vents from Equipment defined in this Flow-Chain/Application (select the item)" or "Other." Neither option is a direct match for a crematory retort venting directly to the atmosphere through its own stack without a control device. The applicant selected "Other" and specified:

"Directly to the atmosphere"

This is consistent with the response provided elsewhere in this application (equipment vents directly to the atmosphere through Stack/Emission Point 01, without a control device).

10. Distance to Nearest Property Line — Basis for Estimate

The facility is located within Building #401 (401 Cornell Drive, Unit J12), situated on Lot #2, Cornell Park, New Castle Hundred, New Castle County, Delaware (Tax Parcel # 10-005.20-003), per the Record Resubdivision Plan (Application Number 2019-0265-S, Sheet 2 of 2, prepared by Howard L. Robertson, Inc., Registered Professional Engineers and Land Surveyors).

The value of 100 feet entered for "Distance to Nearest Property Line" on Form AQM-3.11 is a conservative estimate derived by the applicant from review of the recorded plan referenced above, rather than a field measurement performed by a licensed surveyor. Based on the metes-and-bounds boundary segments depicted on the recorded plan in the vicinity of Building #401, the applicant believes the actual distance is not less than this figure, and is likely greater. The applicant has

used a conservative (lower-bound) estimate deliberately, so as not to overstate the distance between the emission point and the property boundary.

A copy of the relevant recorded plan sheet is enclosed for the Department's reference. The applicant is glad to obtain a precise, surveyed distance from the property owner or a licensed surveyor if the Department requires a certified figure to complete its review.

Please contact the undersigned with any questions regarding the items noted above.

[redacted]
Chief Operating Officer
Triple CCC Enterprises LLC, DBA Dearly Departed Crematory Services

PROCESS FLOW DIAGRAM

Matthews ENVIRONMENTAL SOLUTIONS

Cremator Process Flow Diagram

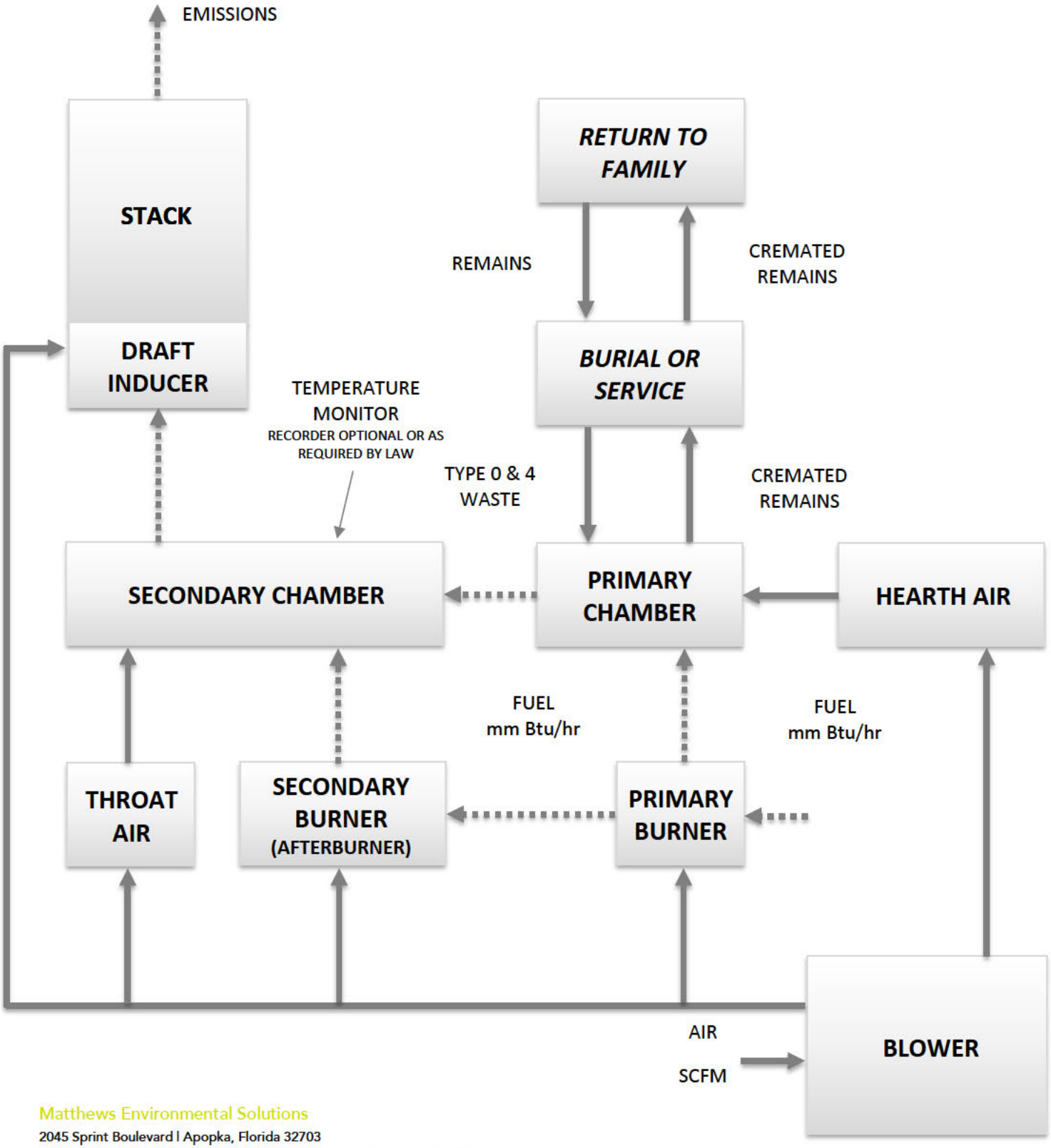

Matthews Environmental Solutions
2045 Sprint Boulevard | Apopka, Florida 32703
O: 407-886-5533 | F: 407-886-5990 | www.matthewsenvironmentalsolutions.com

Matthews INTERNATIONAL
Matthews Environmental Solutions is a (MATW) Matthews International company

Rev 07.27.18

SPECIFICATIONS- Model Power-Pak I

1. Equipment Type	Model Power-Pak I
A. Model No.	IE43-PPI
B. Underwriters Laboratories Listing and File No.	87E8; MH14647
2. Dimensions	
A. Footprint	12’ – 6 ½ ” x 5’ – 3” (3.82 m x 1.60 m)
B. Maximum Length	14’ – 8” (4.47 m)
C. Maximum Width	6’ -5” (1.96 m)
D. Maximum Height	8’ - 4” (2.54 m)
E. Chamber Loading Opening	25 ¾ ” H x 39 ½ ” W (654 mm x 1003 mm)
3. Weight	23,400 lbs. (10,614 kg)
4. Utility/Air Requirements	
A. Gross Gas Input, Natural or LP Gas	2,700,000 BTU/hr. (2,848,651 kJ/h) 3,000,000 BTU/hr. (3,165,168 kJ/h) if operating temperature is greater than 1,600° F (871° C)
Running Gas Pressure, Natural Gas	11 inches (279.4 mm) water column or greater
Running Gas Pressure, LP Gas	11 inches (279.4 mm) water column or greater
B. Electrical Supply	230 volt, 3Ø or 1Ø, 50/60 hz (other available)
C. Air Supply	2,500 cfm (70.8 standard m^3/min)
5. Incineration Capacity	150 lbs./hr. (68 kg/h)
6. Typical Loading Capacity of Waste Types	750 lbs. (340.2 kg)
7. Construction and Safety Standards	Incineration Institute of America, Underwriters Laboratories, Canadian Standards Association
8. Steel Structure Construction	
A. Frame	2” (51 mm) square tubing
B. Front/Rear Plates	3/8” (9.5 mm) plate
C. Floor Plates	3/16” (5 mm) plate
D. Outer Side Casing	12 gauge (3 mm) plate
E. Inner Side Casing	12 gauge (3 mm) plate
9. Stack Construction	
A. Inner Wall	3” (76 mm) castable
B. Outer Wall	12 gauge (3 mm) stainless steel sheet with welded seams. (unlined stack available)
10. Draft Nozzle Construction	Schedule 40 type 316 s.s. pipe, welded connections
11. Main Chamber Door Construction	
A. Steel Shell	3/16” (5 mm) steel, welded with reinforcement
B. Outer Refractory	1” (25 mm) insulating block
C. Inner Refractory	4½” (110 mm) insulating firebrick

THIS DOCUMENT CONTAINS CONFIDENTIAL AND PROPRIETARY INFORMATION OF MATTHEWS ENVIRONMENTAL SOLUTIONS & MAY NOT BE DISCLOSED TO THIRD PARTIES WITHOUT THE WRITTEN CONSENT OF MATTHEWS. UNLESS OTHERWISE SPECIFIED IN WRITING, MATTHEWS ENVIRONMENTAL SOLUTIONS IS THE OWNER OF THIS DOCUMENT AND THE INFORMATION CONTAINED HEREIN

SPECIFICATIONS- Model Power-Pak I

12. Primary Chamber Wall Construction
    - A. Outer Casing Wall ..... 12 gauge (3 mm) sheet
    - B. Inner Frame/Air Compartment ..... 2” (51 mm) air compartment
    - C. Inner Casing Wall ..... 12 gauge (3 mm) sheet
    - D. Outer Refractory Wall ..... 5” (127 mm) insulating block
    - E. Inner Refractory Wall ..... 4½” (114 mm) firebrick

13. Secondary Chamber Wall Construction
    - A. Outer Casing Wall ..... 12 gauge (3 mm) sheet
    - B. Inner Frame/Air Compartment ..... 2” (51 mm) air compartment
    - C. Inner Casing Wall ..... 12 gauge (3 mm) sheet
    - D. Outer Refractory Wall ..... 6” (152 mm) insulating block
    - E. Inner Refractory Wall ..... 4½” (114 mm) firebrick

14. Refractory Temperature Ratings
    - A. Standard Firebrick ..... 3,100° F. (1704° C)
    - B. Insulating Firebrick ..... 2,600° F. (1427° C)
    - C. Castable Refractory (Hearth) ..... 2,550° F. (1399° C)
    - D. Castable Refractory ..... 2,550° F. (1399° C)
    - E. Insulating Block ..... 1,900° F. (1038° C)
    - F. Bonding Mortar ..... 3,200° F. (1760° C)

15. Chamber Volumes (not including external flues, stacks or chimneys)
    - A. Primary Chamber ..... 64 cubic feet (1.8 m^3)
    - B. Secondary Chamber ..... 74 cubic feet (2.1 m^3)

16. Emission Control Features
    - A. Secondary Chamber with Afterburner ..... Included
    - B. Opacity Monitor and Controller with Visual and Audible Alarms ..... Included
    - C. Auxiliary Air Control System ..... Included
    - D. Microprocessor Temperature Control System .... Included

17. Operating Temperatures
    - A. Primary Chamber ..... 32° F. - 1,800° F. (0° C - 982° C)
    - B. Secondary Chamber ..... 1,400° F. - 1,800° F. (760° C - 982° C) as required

18. Secondary Chamber Retention Time ..... > 1 second

19. Ash Removal ..... Door functions as a heat shield. Sweep out beneath front door into hopper that fills collection pan.

THIS DOCUMENT CONTAINS CONFIDENTIAL AND PROPRIETARY INFORMATION OF MATTHEWS ENVIRONMENTAL SOLUTIONS & MAY NOT BE DISCLOSED TO THIRD PARTIES WITHOUT THE WRITTEN CONSENT OF MATTHEWS. UNLESS OTHERWISE SPECIFIED IN WRITING, MATTHEWS ENVIRONMENTAL SOLUTIONS IS THE OWNER OF THIS DOCUMENT AND THE INFORMATION CONTAINED HEREIN

SPECIFICATIONS- Model Power-Pak I

20. Safety Interlocks
    - A. High Gas Pressure ..... Optional
    - B. Low Gas Pressure ..... Optional
    - C. Blower Air Pressure ..... Included
    - D. Door Position ..... Included
    - E. Opacity ..... Included
    - F. Motor Starter Function ..... Included
    - G. Chamber Temperature ..... Included
    - H. Motor Overload ..... Included
    - I. Flame Quality ..... Included
    - J. Burner Safe Start ..... Included
    - K. Cremation Burner/Door Interlock ..... Available upon Env. Agency requirements

21. Burner Description ..... The nozzle mix burners used on this cremation equipment are industrial quality and designed for incinerator use.

22. Ultraviolet Flame Detection ..... Ultraviolet flame detection has proven to be the most reliable means of flame safety. The system is completely sealed in a quartz capsule to eliminate problems, caused by moisture and dust created in the cremation process, which effect flame rod detectors.

23. Operating Panel Indicators
    - A. Safe Run ..... Included
    - B. Door Closed ..... Included
    - C. Pollution Alarm ..... Included
    - D. Afterburner On (Secondary Burner) ..... Included
    - E. Afterburner (Secondary Burner) Reset ..... Included
    - F. Cremation Burner Reset ..... Included
    - G. High Fire Cremation Burner ..... Included
    - H. Low Fire Cremation Burner ..... Included
    - I. Hearth Air ..... Included
    - J. Throat Air Off ..... Included

24. Automatic Timer Functions
    - A. Master Cycle ..... Included
    - B. Hearth Air ..... Included
    - C. Throat Air ..... Included
    - D. Pollution Monitoring ..... Included
    - E. Cremation Burner Hi - Low ..... Included
    - F. Cool Down ..... Included

25. Exterior Finish
    - A. Primer ..... 2 coats rust inhibiting
    - B. Finish ..... 2 coats textured finish

THIS DOCUMENT CONTAINS CONFIDENTIAL AND PROPRIETARY INFORMATION OF MATTHEWS ENVIRONMENTAL SOLUTIONS & MAY NOT BE DISCLOSED TO THIRD PARTIES WITHOUT THE WRITTEN CONSENT OF MATTHEWS. UNLESS OTHERWISE SPECIFIED IN WRITING, MATTHEWS ENVIRONMENTAL SOLUTIONS IS THE OWNER OF THIS DOCUMENT AND THE INFORMATION CONTAINED HEREIN

SPECIFICATIONS- Model Power-Pak I

26.	Start-Up and Training.....	Startup of cremation equipment and training of operators to properly operate and maintain the equipment is performed on-site under actual operating conditions. Included is a comprehensive owner's manual, with details on the equipment, its components and proper operation.
27.	Environmental Submittals	Complete technical portion of state environmental permits. Engineering calculations, technical data, existing stack test results and equipment blueprints provided.

THIS DOCUMENT CONTAINS CONFIDENTIAL AND PROPRIETARY INFORMATION OF MATTHEWS ENVIRONMENTAL SOLUTIONS & MAY NOT BE DISCLOSED TO THIRD PARTIES WITHOUT THE WRITTEN CONSENT OF MATTHEWS. UNLESS OTHERWISE SPECIFIED IN WRITING, MATTHEWS ENVIRONMENTAL SOLUTIONS IS THE OWNER OF THIS DOCUMENT AND THE INFORMATION CONTAINED HEREIN

NOTES:

1) CONTROL CABINET CAN BE MOUNTED ON THE LEFT OR RIGHT SIDE, OR REMOTELY
2) MAIN ELECTRICAL CONNECTION LOCATED IN CONTROL CABINET
3) CHAMBER WIDTH IS 39" [0.99m]
4) STACK CAN BE LOCATED ON THE BACK LEFT OR BACK RIGHT OF UNIT

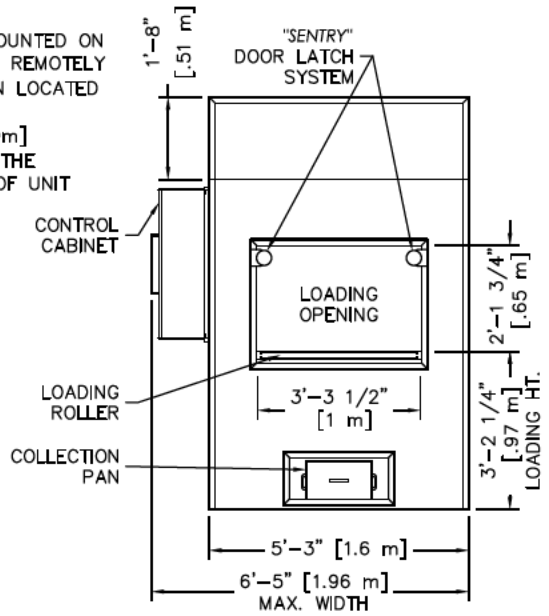

FRONT ELEVATION

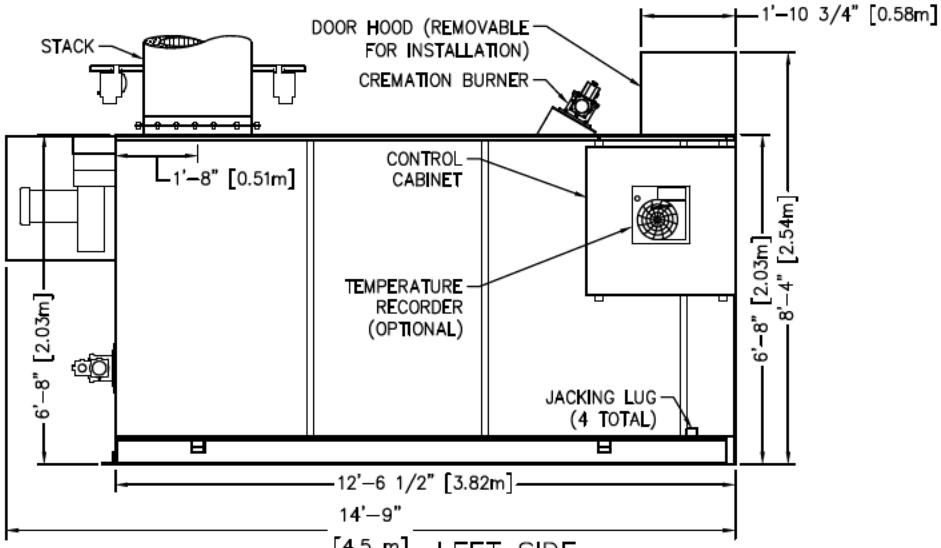

LEFT SIDE ELEVATION

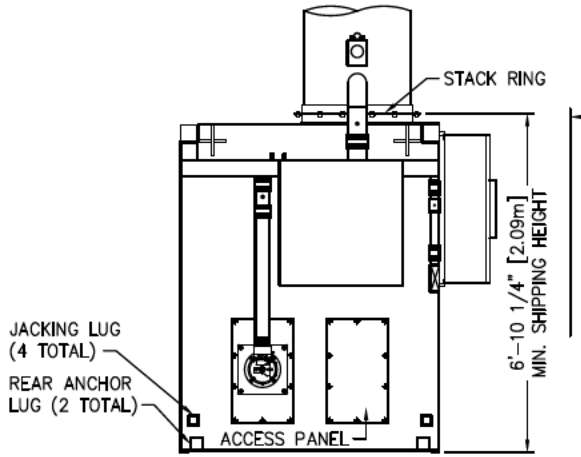

REAR ELEVATION

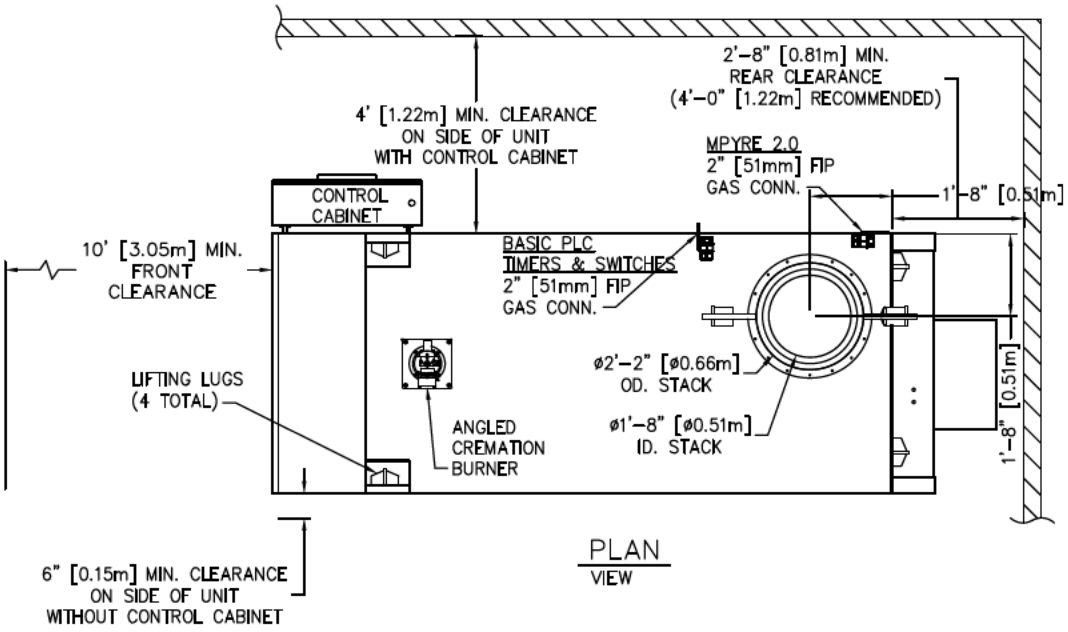

PLAN VIEW

Matthews
ENVIRONMENTAL SOLUTIONS
2045 Sprint Boulevard
Apopka, Florida 32703
USA

POWER-PAK I

PLAN & ELEVATIONS INCL: CLEARANCES, REQUIREMENTS & RECOMMENDATIONS

DRAWN BY: JG	DATE: 03.20.2014	REVISION:			
APPROVED BY:	DATE:	5	10.21.2015	WHISPER SHIELD ADDED	
SCALE: 1/4" = 1'-0"	SHEET: OF:	6	03.15.2017	WHISPER SHIELD LENGTH +1"	
DWG FILE:		7	07.21.2017	REMOVE MAIN ELEC FROM TOP OF UNIT	
DWG NUMBER: $(GETVAR,??)		8	09.19.2017	CHANGED MIN. FRONT CLEAR. TO 10'	

Q:\ENG\MCD NEW SYSTEM\OPERATIONS\PPI\SHOP\PPI_09-003-004.DWG

THIS DRAWING CONTAINS CONFIDENTIAL AND PROPRIETARY INFORMATION OF MATTHEWS ENVIRONMENTAL SOLUTIONS. UNLESS OTHERWISE SPECIFIED IN WRITING, MATTHEWS ENVIRONMENTAL SOLUTIONS IS THE OWNER OF THIS DRAWING AND THE INFORMATION CONTAINED HEREIN. THIS DRAWING AND THE CONTAINED INFORMATION IS CONFIDENTIAL, PROPRIETARY, AND MAY NOT BE REPRODUCED OR DISCLOSED TO THIRD PARTIES WITHOUT THE EXPRESS WRITTEN CONSENT OF MATTHEWS ENVIRONMENTAL SOLUTIONS. IT IS ISSUED FOR ILLUSTRATIVE PURPOSES ONLY AND IS NOT TO BE USED FOR ANY PURPOSE, INCLUDING, BUT NOT LIMITED TO, AS A CONSTRUCTION DRAWING OR FOR A REQUEST FOR BID TO A THIRD PARTY. THIS DRAWING IS PROVIDED WITHOUT ANY WARRANTY EXPRESSED OR IMPLIED. ANY USE OF THIS DRAWING WILL BE AT THE RISK AND SOLE RESPONSIBILITY OF THE USER.

CREMATOR CLEARANCES

	RECOMMENDED		MINIMUM	
TOP: (2)	2 FEET	[610 mm]	6 INCHES	[152 mm]
CABINET SIDE:	4 FEET	[1.22 m]	4 FEET	[1.22 m]
OTHER SIDE:	2 FEET	[610 mm]	6 INCHES	[152 mm]
FRONT:	10+ FEET	[3.05+ m]	10 FEET	[3.05 m]
REAR:	4 FEET	[1.22 m]	32 INCHES	[812 mm]
STACK:	9 INCHES	[229 mm]	6 INCHES	[152 mm]

1. FOR CLEARANCES OTHER THAN THOSE SHOWN, OR FOR SPECIAL REQUIREMENTS, CONSULT YOUR MES REP.

(2.) FROM HIGHEST POINT ON UNIT.

3. CONTROL CABINET MOUNTS ON UNIT'S LEFT OR RIGHT SIDES, OR REMOTELY. (SEE PLAN VIEW, SHEET 1).

4. REAR OF UNIT REFERS TO THE "BACK PLATE", RATHER THAN THE BACK OF THE "WHISPER SHIELD". (SEE PLAN VIEW, SHEET 1).

CREMATOR REQUIREMENTS

FUEL: A PRESSURE REGULATOR ADJUSTABLE TO 11" [279 mm] W.C. FOR NATURAL GAS, OR 11" [279 mm] W.C. FOR LP GAS.

CAPACITY: RANGES FROM 2.0 TO 3.0 MILLION BTU/HR [2.1 TO 3.1 MILLION KILOJOULES/HR] DEPENDING UPON AMOUNT OF BURNERS.

ELECTRICAL: 230 VOLT, 3ø, (40A BREAKER) AND 115v (10A BREAKER), OR 230 VOLT, 1ø, (70A BREAKER) AND 115v (10A BREAKER) 50/60 HERTZ

AIR: LOUVER NEAR THE REAR OF THE UNIT CAPABLE OF PASSING 2,500 CU FT/MIN [70.8 CU M/MIN] OF FREE AIR (36" X 36") [914 mm X 914 mm].

STACK INSTALLATION INSTRUCTIONS

1. APPLY A 1/2" THICK MORTAR JOINT TO EXPOSED REFRACTORY SURFACE IN STACK RING. LOWER THE BASE STACK SECTION (B) ONTO STACK RING (A) AND FASTEN WITH HARDWARE PROVIDED (NO MORE THAN (2) STACK SECTIONS SHALL BE LIFTED TOGETHER). REPEAT PROCESS FOR REMAINING STACK SECTIONS. IF SECTIONS OF VARYING LENGTHS ARE SUPPLIED, ASSEMBLE AS TO AVOID FLANGES & LIFTING EYES INTERFERING WITH RAIN COLLAR LOCATION.

2. INSTALL STORM COLLAR ON STACK, 3" [72 mm] ABOVE NON-COMBUSTIBLE LINER (FLASHING), ALLOWING FOR PROPER VENTILATION (SEE DETAIL).

3. APPLY A 1/4" [6 mm] BEAD OF HIGH-TEMPERATURE SILICON SEALANT (PROVIDED BY MES) TO THE JOINT BETWEEN THE STORM COLLAR (C) AND THE STACK (B).

4. STORM COLLAR IS FURNISHED BY MES. THE NON-COMBUSTIBLE LINER (FLASHING) TO BE PROVIDED BY THE OTHERS.

5. IF FIFTY PERCENT OF THE STACK LENGTH IS ABOVE THE ROOF, GUY WIRES MAY BE REQUIRED. CONSULT WITH YOUR MES REP.

6. RAIN CAP NOT REQUIRED.

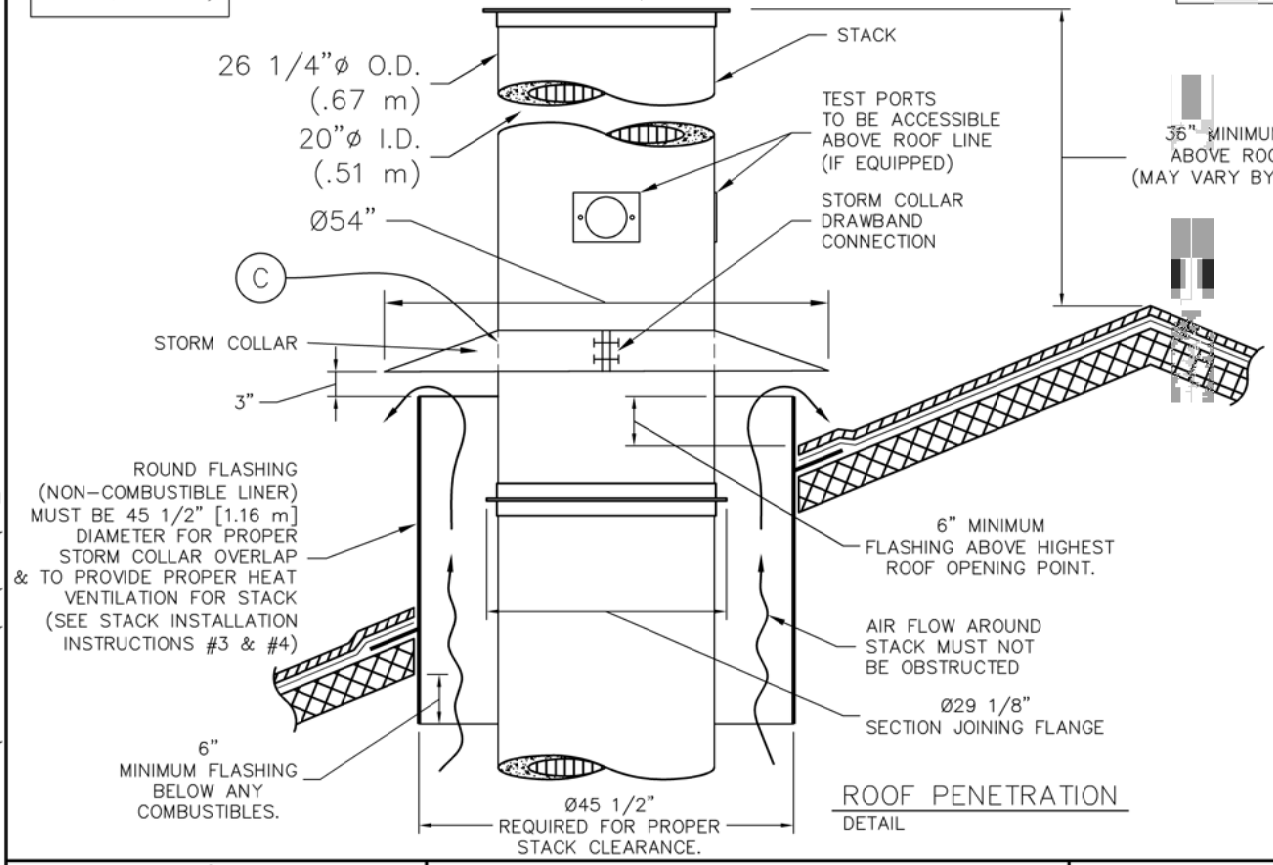

ROOF PENETRATION
DETAIL

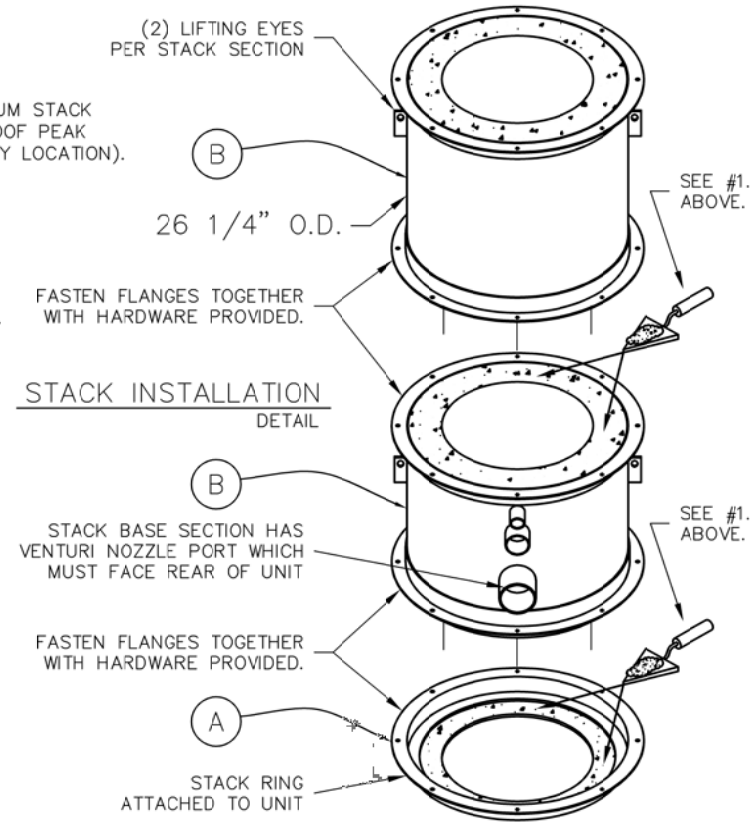

STACK INSTALLATION
DETAIL

Matthews
ENVIRONMENTAL SOLUTIONS
2045 Sprint Boulevard
Apopka, Florida 32703
USA

POWER-PAK I

STACK DETAILS, CLEARANCES & INSTALLATION INSTRUCTIONS.
REFRACTORY STACK DETAIL

DRAWN BY:	JG	DATE:	03.14.2014	REVISION:		
APPROVED BY:	–	DATE:	–	3	12.09.2014	GENERAL MODIFICATIONS 2
SCALE:	1/2" = 1'-0"	SHEET:	OF:	4	12.23.2014	GENERAL MODIFICATIONS 3
DWG FILE:				5	09.20.2017	CHANGED MIN. FRONT CLEAR. TO 10'
DWG NUMBER:		$(GETVAR,??)				

O:\ENG\MCD NEW SYSTEM\OPERATIONS\PPI\SHOP\PPI_09-006.DWG

THIS DRAWING CONTAINS CONFIDENTIAL AND PROPRIETARY INFORMATION OF MATTHEWS ENVIRONMENTAL SOLUTIONS. UNLESS OTHERWISE SPECIFIED IN WRITING, MATTHEWS ENVIRONMENTAL SOLUTIONS IS THE OWNER OF THIS DRAWING AND THE INFORMATION CONTAINED HEREIN. THIS DRAWING AND THE CONTAINED INFORMATION IS CONFIDENTIAL, PROPRIETARY, AND MAY NOT BE REPRODUCED OR DISCLOSED TO THIRD PARTIES WITHOUT THE EXPRESS WRITTEN CONSENT OF MATTHEWS ENVIRONMENTAL SOLUTIONS. IT IS ISSUED FOR ILLUSTRATIVE PURPOSES ONLY AND IS NOT TO BE USED FOR ANY PURPOSE, INCLUDING, BUT NOT LIMITED TO, AS A CONSTRUCTION DRAWING OR FOR A REQUEST FOR BID TO A THIRD PARTY. THIS DRAWING IS PROVIDED WITHOUT ANY WARRANTY EXPRESSED OR IMPLIED. ANY USE OF THIS DRAWING WILL BE AT THE RISK AND SOLE RESPONSIBILITY OF THE USER.

Calculation Of Emissions

Estimated Emission Calculation

Matthews Environmental Solutions
Crematory Incinerator Model IE43-PPI

Total Incenerator Burn Capacity 150 lb/hr of remains (type 4) and associated containers (type 0)
Flue gas flow rate = 1100 dscfm 12 Hours/Day X 6 Days/Week X 52 Weeks/Year
(100 % Excess Air) = 3744 Hours/Year

Total Emission Rate = Incinerator Burn Rate X Emission Factor

Sulfer Dioxide (SO_2)

$$\frac{150 \text{ lb/hr} \times 2.17 \text{ lb/ton} \times 1 \text{ ton}}{2000 \text{ lbs}} = 0.163 \text{ lb/hr} = 0.304668 \text{ TPY}$$

$$\frac{0.16275 \text{ lb/hr} \times 4.54E+05 \text{ mg/lb} \times 1 \text{ ppmv}}{1100 \text{ dscfm} \times 60 \text{ min/hr} \times 0.0283 \text{ m}^3/\text{f}^3 \times 2.61 \text{ mg/m}^3} = 15.16 \text{ ppmv}$$

Nitrogen Oxide (NOx - as Nitrogen Dioxide)

$$\frac{150 \text{ lb/hr} \times 3.56 \text{ lb/ton} \times 1 \text{ ton}}{2000 \text{ lbs}} = 0.267 \text{ lb/hr} = 0.499824 \text{ TPY}$$

$$\frac{0.267 \text{ lb/hr} \times 4.54E+05 \text{ mg/lb} \times 1 \text{ ppmv}}{1100 \text{ dscfm} \times 60 \text{ min/hr} \times 0.028 \text{ m}^3/\text{f}^3 \times 1.88 \text{ mg/m}^3} = 34.89 \text{ ppmv}$$

Hydrocarbons (TOC/VOC - methane)

$$\frac{150 \text{ lb/hr} \times 2.99E-01 \text{ lb/ton} \times 1 \text{ ton}}{2000 \text{ lbs}} = 0.022425 \text{ lb/hr} = 0.04198 \text{ TPY}$$

$$\frac{0.022425 \text{ lb/hr} \times 4.54E+05 \text{ mg/lb} \times 1 \text{ ppmv}}{1100 \text{ dscfm} \times 60 \text{ min/hr} \times 0.0283 \text{ m}^3/\text{f}^3 \times 0.65 \text{ mg/m}^3} = 8.39 \text{ ppmv}$$

Particulates (PM & PM_{10})

$$\frac{150 \text{ lb/hr} \times 4.67 \text{ lb/ton} \times 1 \text{ ton}}{2000 \text{ lbs}} = 0.35025 \text{ lb/hr} = 0.655668 \text{ TPY}$$

$$\frac{0.35025 \text{ lb/hr} \times 7.00E+03 \text{ gr/lb}}{1100 \text{ dscfm} \times 60 \text{ min/hr}} = 0.04 \text{ gr/dscf}$$

Carbon Monoxide (CO)

$$\frac{150 \text{ lb/hr} \times 2.95 \text{ lb/ton} \times 1 \text{ ton}}{2000 \text{ lbs}} = 0.22125 \text{ lb/hr} = 0.41418 \text{ TPY}$$

$$\frac{0.22125 \text{ lb/hr} \times 4.54E+05 \text{ mg/lb} \times 1 \text{ ppmv}}{1100 \text{ dscfm} \times 60 \text{ min/hr} \times 0.028 \text{ m}^3/\text{f}^3 \times 1.14 \text{ mg/m}^3} = 47.68 \text{ ppmv}$$

Notes:
1. Incinerator Emissions based on EPA emissions from Table 2.3-1 and 2.3-2 of AP-42 (5th Edition)
2. All conversion factors from AP-42 Appendix A.

CREMATOR MASS BALANCE

Matthews Environmental Solutions

PPI

THESE CALCULATIONS HAVE BEEN PREPARED TO EVALUATE THE COMBUSTION PROCESS IN THIS UNIT.

THE INCINERATOR INSTITUTE OF AMERICA HAS PUBLISHED THE FOLLOWING SPECIFICATIONS COVERING AVERAGE WASTES.

WASTE TYPE	TYPE 0	TYPE 4
BTU PER POUND	8500	1000
POUND ASH PER POUND WASTE	0.05	0.05
POUND MOISTURE PER POUND WASTE	0.1	0.85
POUND COMBUSTIBLES PER POUND WASTE	0.85	0.1
HOURLY CONSUMPTION OF WASTE (LBS)	10	140

1. MASS OF PRODUCTS OF COMBUSTION FROM CONTAINER

A. COMBUSTION AIR

$$\frac{8500\ \text{BTU/LB}}{100\ \text{BTU/CF OF AIR*}} \times 0.075\ \text{LB/CF OF AIR} = 6.38\ \text{LB/LB BURNED}$$

B. COMBUSTIBLES AND WATER VAPOR FROM CHART ABOVE = 0.95 LB/LB BURNED

C. TOTAL FLUE PRODUCT MASS PER LB BURNED = 7.33 LB/LB BURNED

2. MASS OF PRODUCTS OF COMBUSTION FROM BODY

A. COMBUSTION AIR

$$\frac{1000\ \text{BTU/LB}}{100\ \text{BTU/CF OF AIR*}} \times 0.075\ \text{LB/CF OF AIR} = 0.75\ \text{LB/LB BURNED}$$

B. COMBUSTIBLES AND WATER VAPOR FROM CHART ABOVE = 0.95 LB/LB BURNED

C. TOTAL FLUE PRODUCT MASS PER LB BURNED = 1.70 LB/LB BURNED

SPECIFICATIONS	
PRIMARY BURNER FUEL CONSUMPTION (MMBTU/HR)	1
SECONDARY BURNER FUEL CONSUMPTION (MMBTU/HR)	1.2
ADDITIONAL SECONDARY AIR SUPPLIED (CFM)	200
SEC. CHAMBER OPERATING TEMPERATURE (°F)	**1600**
SECONDARY CHAMBER VOLUME (CU. FT)	74
SEC. CHAMB. CROSS-SECTIONAL AREA (SQ. FT)	2.44
FLAME PORT AREA (SQ. FT)	2.95
MIXING BAFFLES AREA (SQ. FT)	1.36

*AIR AT STANDARD CONDITIONS

3. TOTAL FLUE PRODUCTS

A. MAXIMUM PRIMARY BURNER GAS USAGE

1000000 BTU/HR x 4.5E-05 LBS/BTU = 45 LBS/HR

B. COMBUSTION AIR FOR PRIMARY BURNER

$$\frac{1000000\ \text{BTU/HR}}{100\ \text{BTU/CF AIR}} \times \frac{1}{\text{Burner}} \times 0.075\ \text{LB/CF AIR} = 750\ \text{LBS/HR}$$

C. MAXIMUM SECONDARY BURNER GAS USAGE

1200000 BTU/HR x 4.5E-05 LBS/BTU = 54 LBS/HOUR

D. COMBUSTION AIR FOR SECONDARY BURNER

$$\frac{1200000 \text{ BTU/HR}}{100 \text{ BTU/CF AIR}} \times \frac{1}{\text{Burner}} \times 0.075 \text{ LB/CF AIR} = 900 \text{ LBS/HOUR}$$

E. PRODUCTS FROM TYPE 0 WASTE (CONTAINER)

7.33 LBS/LB BURNED x 10 LB/HR BURN RATE = 73 LBS/HOUR

F. PRODUCTS FROM TYPE 4 WASTE (TISSUE)

1.70 LBS/LB WASTE x 140 LB/HR BURN RATE = 238 LBS/HOUR

G. ADDITIONAL SECONDARY CHAMBER COMBUSTION AIR (THROAT AIR)

12000 CF/HR* x 0.075 LB/CF AIR = 900 LBS/HOUR

H. TOTAL FLUE PRODUCTS = 2960 LBS/HOUR

2. VELOCITY AND TIME CALCULATIONS

A. SCFM CALCULATION (PRODUCTS ASSUMED TO HAVE DENSITY CLOSE TO AIR)

$$2960 \text{ LBS/HR} \times \frac{13.35 \text{ STD. CU. FT/LB}}{60 \text{ MIN/HR}} = 659 \text{ SCFM}$$

B. TOTAL PRODUCTS ACFM @ 1600 °F

$$\frac{2060 \text{ °RANKINE}}{530 \text{ °RANKINE}} \times 658.7 \text{ CFM} = 2560 \text{ ACFM}$$

C. RETENTION TIME

$$\frac{74 \text{ CU. FT}}{2560 \text{ ACFM}} \times \frac{60 \text{ SECONDS}}{1 \text{ MINUTE}} = \mathbf{1.73 \text{ SECONDS}}$$

Source Test Report

Harmony Grove Cemetery
30 Grove Street,
Salem, Massachusetts

Source Tested: New Crematorium Retort
Test Date: August 30, 2023
Report Submittal Date: October 2, 2023

Project No. AST-2023-3149

Prepared By
Alliance Technical Group, LLC
Boston Office
1020 Turnpike Street, Suite 8
Canton, MA 02021

Regulatory Information

Permit No.	ePlace Authorization #: AQ02C-0000004 Approval No.: NE-21-020
Regulatory Citation	310 CMR 7.00
Regulatory Agency	Massachusetts Department of Environmental Protection (MassDEP) Northeast Regional Office

Source Information

Source Name	*Source ID*	*Target Parameters*
Crematory Retort	EU #2	NOx, CO, PM/CPM, VE

Contact Information

Test Location
Harmony Grove Cemetery
30 Grove Street
Salem, MA 01970
[redacted]
978-744-0554

Contact
[redacted]
Cemetery Administrator

Test Company
Alliance Technical Group, LLC
Boston Office
1020 Turnpike Street, Suite 8
Canton, MA 02021

Project Manager
[redacted]
(781) 799-0710

Field Team Leader
[redacted]
(781) 770-8835

QA/QC Manager
[redacted]
(812) 452-4785

Report Coordinator
[redacted]
(256) 260-3981

Analytical Laboratory
Alliance Technical Group, LLC
214 Central Circle SW
Decatur, AL 35603
[redacted]
(256) 351-0121 ext. 124

Alliance Technical Group, LLC (Alliance) has completed the source testing as described in this report. Results apply only to the source(s) tested and operating condition(s) for the specific test date(s) and time(s) identified within this report. All results are intended to be considered in their entirety, and Alliance is not responsible for use of less than the complete test report without written consent. This report shall not be reproduced in full or in part without written approval from the customer.

To the best of my knowledge and abilities, all information, facts, and test data are correct. Data presented in this report has been checked for completeness and is accurate, error-free, and legible. Onsite testing was conducted in accordance with approved internal Standard Operating Procedures. Any deviations or problems are detailed in the relevant sections in the test report.

This report is only considered valid once an authorized representative of Alliance has signed in the space provided below; any other version is considered draft. This document was prepared in portable document format (.pdf) and contains pages as identified in the bottom footer of this document.

[redacted]

Project Manager
Alliance Technical Group, LLC

10/11/23
Date

[redacted]

Field Team Leader
Alliance Technical Group, LLC

10/11/23
Date

1.0 Introduction

Alliance Technical Group, LLC (Alliance) was retained by Harmony Grove Cemetery (Harmony Grove) to conduct compliance testing at the Salem, Massachusetts (MA) facility. Portions of the facility are subject to provisions from 310 CMR 7.00. The facility operates under Massachusetts Department of Environmental Protection (MassDEP) Permit Approval No.: NE-21-020. Testing was conducted to determine the emission rates of nitrogen oxides (NOx), carbon monoxide (CO), and particulate matter (PM/CPM), and make visible emission (opacity) observations at the exhaust of one of three retorts.

1.1 Facility and Source Description

Harmony Grove installed three (3) new retorts on the grounds of its cemetery at 30 Grove Street, Salem, Massachusetts. The three (3) new retorts are Power-Pak I IE43-PPI natural gas fired retorts manufactured by Matthews Cremation Division, as replacements for the three Power Pack II model crematory retorts, manufactured by Industrial Equipment and Engineering Company, that were installed in 1991. The three (3) new crematory retorts are identical units, designated in this Approval as Emission Unit 1 (EU1), EU2, and EU3, and are proposed to operate concurrently. The new crematory retorts were installed sequentially to replace the three existing retorts within a one (1) year period.

All three (3) retorts were installed, commissioned, and deemed fully operational as of May 1, 2023. Each retort consists of a primary incineration chamber, a secondary (i.e., afterburner) chamber with integrated burners and air controls, and a refractory lined stack. The proposed retorts are designed for the cremation of human remains only. The proposed retorts have a rated maximum cremation rate of 150 pounds per hour (lb/hr) of Type 4 human remains. Prior to cremation, human remains are placed in a cremation casket (i.e., Type 0 waste) to facilitate more complete incineration.

Each retort will automatically control the incineration process by adjusting combustion air and fuel in the primary chamber. The primary chamber combustion byproduct is a highly combustible gas mixture that flows into the secondary chamber where more air (i.e., excess air) is admitted ensuring further oxidation of all material. The secondary chamber is sized to provide at least 1-second of flue product residence time at 1,600°F to ensure complete mixing and combustion.

Each of the primary chambers of the three retorts is equipped with an Eclipse ThermJet Model TJ0150 burner utilizing natural gas as its only fuel and with a heat input rating of 1,000,000 British thermal units (“Btu”) per hour. Each secondary combustion chamber is equipped with an Eclipse ThermJet Model TJ0150 burner using natural gas as its only fuel with a heat input rating of 1,200,000 Btu per hour.

In addition, Harmony replaced the three (3) existing retort exhaust stacks with a new stack for each emission unit. The stacks discharge three feet above the peak of the crematory building. Appendix A contains a photograph of the retort exhaust stacks. Test ports will be accessed using a man-lift.

Table 1-1: Emission Unit and Control Device Information

Emission Units	Description	Rated Capacity
Crematory Retorts EU1, EU2, EU3	Crematory Retort: Matthews Cremation Division Power-Pak I, IE43-PPI Primary Combustion Chamber Burner: Eclipse ThermJet Model TJ0150 Secondary Combustion Chamber Burner: Eclipse ThermJet Model TJ0150	Cremation Capacity 150 lb/hr/unit (incineration rate) 750 lb/unit (charge capacity) Primary Combustion Chamber Burner: 1.0 MMBtu/hr/unit Secondary Combustion Chamber Burner: 1.2 MMBtu/hr/unit

1.2 Project Team

Personnel involved in this project are identified in the following table.

Table 1-2: Project Team

Facility Personnel	[redacted]
Regulatory Personnel	MassDEP NERO
Alliance Personnel	[redacted]

1.3 Test Protocol & Notification

Testing was conducted in accordance with the test protocol submitted to MassDEP on July 31, 2023.

1.4 Test Program Notes

Testing was completed without any deviations.

2.0 Summary of Results

Alliance conducted compliance testing at the Harmony Grove facility in Salem, MA on August 31, 2023. Testing consisted of determining the emission rates of NOx, CO, and PM/CPM, and make opacity observations at the exhaust of one of three retorts.

Table 2-1 provides a summary of the emission testing results with comparisons to the applicable MassDEP permit limits. This table also provides a summary of the process operating and control system data collected during testing. Any difference between the summary results listed in the following table and the detailed results contained in appendices is due to rounding for presentation.

Table 2-1: Summary of Results

Run Number	Run 1	Run 2	Run 3	Average
Date	**08/31/23**	**08/31/23**	**08/31/23**	--
Stack Data				
Volumetric Flow Rate, acfm	2,258	2,332	2,440	2,343
Volumetric Flow Rate, dscfm	644.4	669.2	692.4	668.7
Stack Temperature, °F	1,111	1,146	1,169	1,142
Pressure, Inches Hg	29.88	29.94	29.94	29.92
Water Content, %	14.95	12.72	12.45	13.37
Oxygen Concentration, % dry	8.32	12.69	10.01	10.34
Particulate Matter Data				
Filterable PM Concentration, grain/dscf @ 7% O_2	0.0331	0.0350	0.0231	0.0304
Filterable PM Emission Rate, lb/hr	0.17	0.12	0.11	0.13
Condensable PM Concentration, grain/dscf @ 7% O_2	0.0021	0.0055	0.0016	0.0031
Condensable PM Emission Rate, lb/hr	0.01	0.02	0.01	0.01
Total PM Concentration, grain/dscf @ 7% O_2	0.035	0.041	0.025	0.033
Permit Limit, grain/dscf @ 7% O_2	--	--	--	**0.060**
Total PM Emission Rate, lb/hr	0.176	0.137	0.115	0.143
Permit Limit, lb/hr	--	--	--	**0.313**
Carbon Monoxide Data				
Concentration, ppmvd	10.06	3.47	5.19	6.24
Concentration, ppmvd @ 7 % O_2	11.12	5.87	6.63	7.87
Permit Limit, ppmvd @ 7 % O_2	--	--	--	**50**
Emission Rate, lb/hr	0.03	0.01	0.02	0.02
Permit Limit, lb/hr	--	--	--	**0.133**
Nitrogen Oxides Data				
Concentration, ppmvd	104.61	73.16	124.00	100.59
Concentration, ppmvd @ 7 % O_2	115.59	123.92	158.25	132.59
Permit Limit, ppmvd @ 7 % O_2	--	--	--	**100**
Emission Rate, lb/hr	0.48	0.35	0.62	0.48
Permit Limit, lb/hr	--	--	--	**0.436**
Visible Emissions Data				
Highest 6-minute Average, %	1.0	0.2	0.0	--
Permit Limit, %	--	--	--	**5**

3.0 Testing Methodology

The emission testing program was conducted in accordance with the test methods listed in Table 3-1. Method descriptions are provided below while quality assurance/quality control data is provided in Appendix D.

Table 3-1: Source Testing Methodology

Parameter	U.S. EPA Reference Test Methods	Notes/Remarks
Volumetric Flow Rate	1 & 2	Full Velocity Traverses
Oxygen/Carbon Dioxide	3A	Instrumental Analysis
Moisture Content	4	Gravimetric Analysis
Total Particulate Matter	5/202	Isokinetic Sampling
Nitrogen Oxides	7E	Instrumental Analysis
Carbon Monoxide	10	Instrumental Analysis
Visible Emission Evaluation	9	Certified Observer

3.1 U.S. EPA Reference Test Methods 1 & 2 – Volumetric Flow Rate

The sampling location and number of traverse (sampling) points were selected in accordance with U.S. EPA Reference Test Method 1. To determine the minimum number of traverse points, the upstream and downstream distances were equated into equivalent diameters and compared to Figure 1-1 (for isokinetic sampling) and/or Figure 1-2 (measuring velocity alone) in U.S. EPA Reference Test Method 1.

Full velocity traverses were conducted in accordance with U.S. EPA Reference Test Method 2 to determine the average stack gas velocity pressure, static pressure, and temperature. The velocity and static pressure measurement system consisted of a pitot tube and inclined manometer. The stack gas temperature was measured with a K-type thermocouple and pyrometer.

Stack gas velocity pressure and temperature readings were recorded during each test run. The data collected was utilized to calculate the volumetric flow rate in accordance with U.S. EPA Reference Test Method 2.

3.2 U.S. EPA Reference Test Method 3A – Oxygen and Carbon Dioxide

The oxygen (O_2) and carbon dioxide (CO_2) testing were conducted in accordance with U.S. EPA Reference Test Method 3A. Data was collected online and reported in one-minute averages. The sampling system consisted of a stainless-steel probe, heated Teflon sample line(s), gas conditioning system and the identified gas analyzer. The gas conditioning system was a non-contact condenser used to remove moisture from the stack gas. The quality control measures are described in Section 3.8.

3.3 U.S. EPA Reference Test Method 4 – Gas Moisture Content

The stack gas moisture content (BWS) was determined in accordance with U.S. EPA Reference Test Method 4. The gas conditioning train consisted of a series of chilled impingers. Prior to testing, each impinger was filled with a known quantity of water or silica gel. Each impinger was analyzed gravimetrically before and after each test run on the same balance to determine the amount of moisture condensed.

3.4 U.S. EPA Reference Test Methods 5 and 202 – Total Particulate Matter

The total particulate matter (filterable and condensable PM) testing was conducted in accordance with U.S. EPA Reference Test Methods 5 and 202. The complete sampling system consisted of a glass nozzle, glass-lined probe, pre-weighed quartz filter, coil condenser, un-weighed Teflon filter, gas conditioning train, pump, and calibrated dry gas meter. The gas conditioning train consisted of a coiled condenser and four (4) chilled impingers. The first, and second impingers were initially empty, the third contained 100 mL of de-ionized water and the last impinger contained 200-300 grams of silica gel. The un-weighed 90 mm Teflon filter was placed between the second and third impingers. The probe liner heating system was maintained at a temperature of 248 ±25°F, and the impinger temperature was maintained at 68°F or less throughout testing. The temperature of the Teflon filter was maintained greater than 65°F but less than or equal to 85°F.

Following the completion of each test run, the sampling train was leak checked at a vacuum pressure greater than or equal to the highest vacuum pressure observed during the run. The nitrogen purge was omitted due to minimal condensate collected in the dry impingers. After the leak check the impinger contents were measured for moisture gain.

The pre-weighed quartz filter was carefully removed and placed in container 1. The probe, nozzle and front half of the filter holder were rinsed three (3) times with acetone to remove any adhering particulate matter and these rinses were recovered in container 2. All containers were sealed, labeled and liquid levels marked for transport to the identified laboratory for filterable particulate matter analysis.

The contents of impingers 1 and 2 were recovered in container CPM Cont. #1. The back half of the filterable PM filter holder, the coil condenser, impingers 1 and 2 and all connecting glassware were rinsed with DIUF water and then rinsed with acetone, followed by hexane. The water rinses were added to container CPM Cont. #1 while the solvent rinses were recovered in container CPM Cont. #2. The Teflon filter was removed from the filter holder and placed in container CPM Cont. #3. The front half of the condensable PM filter holder was rinsed with DIUF water and then with acetone, followed by hexane. The water rinse was added to container CPM Cont. #1 while the solvent rinses were added to container CPM Cont. #2. All containers were sealed, labeled and liquid levels marked for transport to the identified laboratory for condensable particulate matter analysis.

3.5 U.S. EPA Reference Test Method 7E – Nitrogen Oxides

The nitrogen oxides (NOx) testing was conducted in accordance with U.S. EPA Reference Test Method 7E. Data was collected online and reported in one-minute averages. The sampling system consisted of a stainless-steel probe, heated Teflon sample line(s), gas conditioning system and the identified gas analyzer. The gas conditioning system was a non-contact condenser used to remove moisture from the stack gas. The quality control measures are described in Section 3.8.

3.6 U.S. EPA Reference Test Method 9 – Visible Emissions Evaluations

The stack gas opacity was determined in accordance with U.S. EPA Reference Test 9. Visible emission evaluations were conducted by a certified visible emissions evaluator. Opacity readings were recorded in 15-second intervals during each of three (3) 60-minute evaluations.

3.7 U.S. EPA Reference Test Method 10 – Carbon Monoxide

The carbon monoxide (CO) testing was conducted in accordance with U.S. EPA Reference Test Method 10. Data was collected online and reported in one-minute averages. The sampling system consisted of a stainless-steel probe,

heated Teflon sample line(s), gas conditioning system, and the identified gas analyzer. The gas conditioning system was a non-contact condenser used to remove moisture from the gas. The quality control measures are described in Section 3.8.

3.8 Quality Assurance/Quality Control – U.S. EPA Reference Test Methods 3A, 7E, and 10

EPA Protocol 1 Calibration Gases

Cylinder calibration gases used met EPA Protocol 1 (+/- 2%) standards. Copies of all calibration gas certificates can be found in the Quality Assurance/Quality Control Appendix.

Direct Calibration & Calibration Error Test

Low Level gas was introduced directly to the analyzer. After adjusting the analyzer to the Low-Level gas concentration and once the analyzer reading was stable, the analyzer value was recorded. This process was repeated for the High-Level gas. For the Calibration Error Test, Low, Mid, and High Level calibration gases were sequentially introduced directly to the analyzer. All values were within 2.0 percent of the Calibration Span or 0.5 ppmv/% absolute difference.

System Bias and Response Time

Mid Level gas (whichever was closer to the stack gas concentration) was introduced at the probe and the time required for the analyzer reading to reach 95 percent or 0.5 ppmv/% (whichever was less restrictive) of the gas concentration was recorded. The analyzer reading was observed until it reached a stable value, and this value was recorded. Next, Low Level gas was introduced at the probe and the time required for the analyzer reading to decrease to a value within 5.0 percent or 0.5 ppmv/% (whichever was less restrictive) was recorded. If the Low-Level gas was zero gas, the response was 0.5 ppmv/% or 5.0 percent of the upscale gas concentration (whichever was less restrictive). The analyzer reading was observed until it reached a stable value and this value was recorded. The measurement system response time and initial system bias were determined from these data. The System Bias was within 5.0 percent of the Calibration Span or 0.5 ppmv/% absolute difference.

Post Test System Bias Checks

Mid Level gas (whichever was closer to the stack gas concentration) was introduced at the probe. After the analyzer response was stable, the value was recorded. Next, Low Level gas was introduced at the probe, and the analyzer value recorded once it reached a stable response. The System Bias was within 5.0 percent of the Calibration Span or 0.5 ppmv/% absolute difference or the data was invalidated, and the Calibration Error Test and System Bias were repeated.

Post Test Drift Checks

Drift between pre- and post-run System Bias was within 3 percent of the Calibration Span or 0.5 ppmv/% absolute difference. If the drift exceeded 3 percent or 0.5 ppmv/%, the Calibration Error Test and System Bias were repeated.

Stratification Check

To determine the number of sampling points, a gas stratification check was conducted prior to initiating testing. The pollutant concentrations were measured at three points (16.7, 50.0 and 83.3 percent of the measurement line). Each traverse point was sampled for a minimum of twice the system response time.

If the pollutant concentration at each traverse point did not differ more than 5 percent or 0.5 ppmv/0.3% (whichever was less restrictive) of the average pollutant concentration, then single point sampling was conducted during the test

runs. If the pollutant concentration did not meet these specifications but differed less than 10 percent or 1.0 ppmv/0.5% from the average concentration, then three (3) point sampling was conducted (stacks less than 7.8 feet in diameter - 16.7, 50.0 and 83.3 percent of the measurement line; stacks greater than 7.8 feet in diameter – 0.4, 1.0, and 2.0 meters from the stack wall). If the pollutant concentration differed by more than 10 percent or 1.0 ppmv/0.5% from the average concentration, then sampling was conducted at a minimum of twelve (12) traverse points. Copies of stratification check data can be found in the Quality Assurance/Quality Control Appendix.

NO_x Converter Check

An NO_2 – NO converter check was performed on the analyzer at the completion of testing. An approximately 51 ppm nitrogen dioxide cylinder gas was introduced directly to the NOx analyzer and the instrument response was recorded in an electronic data sheet. The instrument response was within +/- 10 percent of the cylinder concentration.

Data Collection

A Data Acquisition System with battery backup was used to record the instrument response in one (1) minute averages. The data was continuously stored as a *.CSV file in Excel format on the hard drive of a computer. At the completion of testing, the data was also saved to the Alliance server. All data was reviewed by the Field Team Leader before leaving the facility. Once arriving at Alliance's office, all written and electronic data was relinquished to the report coordinator and then a final review was performed by the Project Manager.

Location:	Harmony Grove Cemetery - Salem, MA
Source:	EU#2
Project No.:	AST-2023-3149
Run No. /Method	Run 1 / Method 3A

O_2 - Outlet Concentration (C_{O_2}), % dry

$$C_{O_2} = (C_{obs} - C_0) \times \left(\frac{C_{MA}}{(C_M - C_0)} \right)$$

where,

C_{obs}	8.28	= average analyzer value during test, % dry
C_o	0.15	= average of pretest & posttest zero responses, % dry
C_{MA}	9.98	= actual concentration of calibration gas, % dry
C_M	9.90	= average of pretest & posttest calibration responses, % dry
C_{O_2}	8.32	= O_2 Concentration, % dry

Location:	Harmony Grove Cemetery - Salem, MA
Source:	EU#2
Project No.:	AST-2023-3149
Run No. /Method	Run 1 / Method 3A

CO_2 - Outlet Concentration (C_{CO_2}), % dry

$$C_{CO_2} = (C_{obs} - C_0) \times \left(\frac{C_{MA}}{(C_M - C_0)} \right)$$

where,

C_{obs}	8.64	= average analyzer value during test, % dry
C_o	0.25	= average of pretest & posttest zero responses, % dry
C_{MA}	9.98	= actual concentration of calibration gas, % dry
C_M	9.95	= average of pretest & posttest calibration responses, % dry
C_{CO_2}	8.63	= CO_2 Concentration, % dry

Location:	Harmony Grove Cemetery - Salem, MA
Source:	EU#2
Project No.:	AST-2023-3149
Run No. /Method	Run 1 / Method 10

CO - Outlet Concentration (C_{CO}), ppmvd

$$C_{CO} = (C_{obs} - C_0) \times \left(\frac{C_{MA}}{(C_M - C_0)} \right)$$

where,

C_{obs}	10.26	= average analyzer value during test, ppmvd
C_o	0.35	= average of pretest & posttest zero responses, ppmvd
C_{MA}	95.51	= actual concentration of calibration gas, ppmvd
C_M	94.40	= average of pretest & posttest calibration responses, ppmvd
C_{CO}	10.06	= CO Concentration, ppmvd

CO - Outlet Concentration (C_{COc7}), ppmvd @ 7% O_2

$$C_{COc7} = C_{CO} \times \left(\frac{20.9 - 7}{20.9 - O_2} \right)$$

where,

C_{CO}	10.06	= CO - Outlet Concentration, ppmvd
C_{O_2}	8.32	= oxygen concentration, %
C_{COc7}	11.12	= ppmvd @7% O_2

CO - Outlet Emission Rate (ER_{CO}), lb/hr

$$ER_{CO} = \frac{C_{CO} \times MW \times Qs \times 60 \frac{min}{hr} \times 28.32 \frac{L}{ft^3}}{24.04 \frac{L}{g-mole} \times 1.0E06 \times 453.592 \frac{g}{lb}}$$

where,

C_{CO}	10.06	= CO - Outlet Concentration, ppmvd
MW	28.01	= CO molecular weight, g/g-mole
Qs	644	= stack gas volumetric flow rate at standard conditions, dscfm
ER_{CO}	0.03	= lb/hr

Location:	Harmony Grove Cemetery - Salem, MA
Source:	EU#2
Project No.:	AST-2023-3149
Run No. /Method	Run 1 / Method 7E

NOx - Outlet Concentration (C_{NOx}), ppmvd

$$C_{NOx} = (C_{obs} - C_0) \times \left(\frac{C_{MA}}{(C_M - C_0)}\right)$$

where,

C_{obs}	103.47	= average analyzer value during test, ppmvd
C_o	0.25	= average of pretest & posttest zero responses, ppmvd
C_{MA}	96.43	= actual concentration of calibration gas, ppmvd
C_M	95.40	= average of pretest & posttest calibration responses, ppmvd
C_{NOx}	104.61	= NOx Concentration, ppmvd

NOx - Outlet Concentration (C_{NOxc7}), ppmvd @ 7% O_2

$$C_{NOxc7} = C_{NOx} \times \left(\frac{20.9 - 7}{20.9 - O_2}\right)$$

where,

C_{NOx}	104.61	= NOx - Outlet Concentration, ppmvd
C_{O_2}	8.32	= oxygen concentration, %
C_{NOxc7}	115.59	= ppmvd @7% O_2

NOx - Outlet Emission Rate (ER_{NOx}), lb/hr

$$ER_{NOx} = \frac{C_{NOx} \times MW \times Qs \times 60 \frac{min}{hr} \times 28.32 \frac{L}{ft^3}}{24.04 \frac{L}{g-mole} \times 1.0E06 \times 453.592 \frac{g}{lb}}$$

where,

C_{NOx}	104.61	= NOx - Outlet Concentration, ppmvd
MW	46.0055	= NOx molecular weight, g/g-mole
Qs	644	= stack gas volumetric flow rate at standard conditions, dscfm
ER_{NOx}	0.48	= lb/hr

Location: Harmony Grove Cemetery - Salem, MA
Source: EU #2
Project No.: AST-2023-3149
Run No.: 1
Parameter: PM/CPM

Meter Pressure (Pm), in. Hg

$$Pm = Pb + \frac{\Delta H}{136}$$

where,

Pb	29.88	= barometric pressure, in. Hg
ΔH	0.643	= pressure differential of orifice, in H_2O
Pm	29.93	= in. Hg

Absolute Stack Gas Pressure (Ps), in. Hg

$$Ps = Pb + \frac{Pg}{13\,6}$$

where,

Pb	29.88	= barometric pressure, in. Hg
Pg	0.02	= static pressure, in. H_2O
Ps	29.88	= in. Hg

Standard Meter Volume (Vmstd), dscf

$$Vmstd = \frac{17.636 \times Y \times Vm \times Pm}{Tm}$$

where,

Y	0.9954	= meter correction factor
Vm	30.126	= meter volume, cf
Pm	29.93	= absolute meter pressure, in. Hg
Tm	527.2	= absolute meter temperature, ^oR
Vmstd	30.023	= dscf

Standard Wet Volume (Vwstd), scf

$$Vwstd = 0.04716 \times Vlc$$

where,

Vlc	111.9	= volume of H_2O collected, ml
Vwstd	5.277	= scf

Moisture Fraction (BWS), dimensionless (measured)

$$BWS = \frac{Vwstd}{(Vwstd + Vmstd)}$$

where,

Vwstd	5.277	= standard wet volume, scf
Vmstd	30.023	= standard meter volume, dscf
BWS	0.149	= dimensionless

Molecular Weight (DRY) (Md), lb/lb-mole

$$Md = (0.44 \times \%\,CO_2) + (0.32 \times \%\,O2) + (0.28\,(100 - \%\,CO_2 - \%\,O2))$$

where,

CO_2	8.6	= carbon dioxide concentration, %
O_2	8.3	= oxygen concentration, %
Md	29.71	= lb/lb mol

Molecular Weight (WET) (Ms), lb/lb-mole

$$Ms = Md\ (1 - BWS) + 18.015\ (BWS)$$

where,

Md	29.71	= molecular weight (DRY), lb/lb mol
BWS	0.149	= moisture fraction, dimensionless
Ms	27.96	= lb/lb mol

Location: Harmony Grove Cemetery - Salem, MA
Source: EU #2
Project No.: AST-2023-3149
Run No.: 1
Parameter: PM/CPM

Average Velocity (Vs), ft/sec

$$Vs = 85.49 \times Cp \times (\Delta P^{1/2})\,avg \times \sqrt{\frac{Ts}{Ps \times Ms}}$$

where,

Cp	0.840	= pitot tube coefficient
$\Delta P^{1/2}$	0.197	= velocity head of stack gas, $(in.\ H_2O)^{1/2}$
Ts	1570.3	= absolute stack temperature, °R
Ps	29.88	= absolute stack gas pressure, in. Hg
Ms	27.96	= molecular weight of stack gas, lb/lb mol
Vs	19.4	= ft/sec

Average Stack Gas Flow at Stack Conditions (Qa), acfm

$$Qa = 60 \times Vs \times As$$

where,

Vs	19.4	= stack gas velocity, ft/sec
As	1.94	= cross-sectional area of stack, ft^2
Qa	2,258	= acfm

Average Stack Gas Flow at Standard Conditions (Qs), dscfm

$$Qs = 17.636 \times Qa \times (1 - BWS) \times \frac{Ps}{Ts}$$

where,

Qa	2,258	= average stack gas flow at stack conditions, acfm
BWS	0.149	= moisture fraction, dimensionless
Ps	29.88	= absolute stack gas pressure, in. Hg
Ts	1570.3	= absolute stack temperature, °R
Qs	644	= dscfm

Dry Gas Meter Calibration Check (Yqa), dimensionless

$$Yqa = \frac{Y - \left(\frac{\Theta}{Vm}\sqrt{\frac{0.0319 \times Tm \times 29}{\Delta H@ \times \left(Pb + \frac{\Delta\,Havg.}{13.6}\right) \times Md}}\sqrt{\Delta H}\,avg.\right)}{Y} \times 100$$

where,

Y	0.9954	= meter correction factor, dimensionless
Θ	60	= run time, min.
Vm	30.126	= total meter volume, dcf
Tm	527.2	= absolute meter temperature, °R
ΔH@	1.559	= orifice meter calibration coefficient, in. H_2O
Pb	29.88	= barometric pressure, in. Hg
ΔH avg	0.643	= average pressure differential of orifice, in H_2O
Md	29.71	= molecular weight (DRY), lb/lb mol
$(\Delta H)^{1/2}$	0.801	= average squareroot pressure differential of orifice, $(in.\ H2O)^{1/2}$
Yqa	5.0	= percent

Location: Harmony Grove Cemetery - Salem, MA
Source: EU #2
Project No.: AST-2023-3149
Run No.: 1
Parameter: PM/CPM

Volume of Nozzle (Vn), ft^3

$$\mathrm{Vn} = \frac{Ts}{\mathrm{Ps}}\left(0.002669 \times Vlc + \frac{\mathrm{Vm} \times Pm \times Y}{Tm}\right)$$

where,

Ts	1570.3	= absolute stack temperature, °R
Ps	29.88	= absolute stack gas pressure, in. Hg
Vlc	111.9	= volume of H_2O collected, ml
Vm	30.126	= meter volume, cf
Pm	29.93	= absolute meter pressure, in. Hg
Y	0.995	= meter correction factor, unitless
Tm	527.2	= absolute meter temperature, °R
Vn	105.156	= volume of nozzle, ft^3

Isokinetic Sampling Rate (I), %

$$\mathrm{I} = \left(\frac{\mathrm{Vn}}{\theta \times 60 \times \mathrm{An} \times Vs}\right) \times 100$$

where,

Vn	105.156	= nozzle volume, ft3
θ	60.0	= run time, minutes
An	0.00140	= area of nozzle, ft^2
Vs	19.4	= average velocity, ft/sec
I	108.0	= %

Filterable PM Concentration (C_s), grain/dscf

$$\mathrm{C}_s = \frac{\mathrm{M_n} \times 0.0154}{\mathrm{Vmstd}}$$

where,

Mn	58.2	= filterable PM mass, mg
Vmstd	30.023	= standard meter volume, dscf
C_s	0.0299	= grain/dscf

Filterable PM Concentration (corrected) (C_{SC-7}), grain/dscf @ 7% O_2

$$C_{sc-7} = \frac{M_n \times 0.0154}{Vmstd} \times \frac{20.9 - 7}{20.9 - O_2}$$

where,

Mn	58.2	= filterable PM mass, mg
Vmstd	30.023	= standard meter volume, dscf
O_2	8.3	= oxygen concentration, %
C_{SC-7}	0.0331	= grain/dscf @ 7% O_2

Location: Harmony Grove Cemetery - Salem, MA
Source: EU #2
Project No.: AST-2023-3149
Run No.: 1
Parameter: PM/CPM

Filterable PM Emission Rate (PMR), lb/hr

$$PMR = \frac{C_s \times Qs \times 60}{7.0E+03}$$

where,

C_s	0.0299	= filterable PM concentration, grain/dscf
Qs	644	= average stack gas flow at standard conditions, dscfm
PMR	0.17	= lb/hr

Condensable PM Concentration (C_{CPM}), grain/dscf

$$C_{CPM} = \frac{M_{CPM} \times 0.0154}{Vmstd}$$

where,

M_{CPM}	3.7	= condensable PM mass, mg
Vmstd	30.023	= standard meter volume, dscf
C_{CPM}	0.0019	= grain/dscf

Condensable PM Concentration (corrected) (C_{CPMc-7}), grain/dscf @ 7% O_2

$$C_{CPMc-7} = \frac{M_{CPM} \times 0.0154}{Vmstd} \times \frac{20.9\% - 7}{20.9\% - O_2}$$

where,

M_{CPM}	3.7	= condensable PM mass, mg
Vmstd	30.023	= standard meter volume, dscf
O_2	8.3	= oxygen concentration, %
C_{CPMc-7}	0.0021	= grain/dscf @ 7% O2

Condensable PM Emission Rate (ER_{CPM}), lb/hr

$$ER_{CPM} = \frac{C_{CPM} \times Qs \times 60\frac{min}{hr}}{7.0E+03}$$

where,

C_{CPM}	0.0019	= condensable PM concentration, grain/dscf
Qs	644	= average stack gas flow at standard conditions, dscfm
ER_{CPM}	0.01	= lb/hr

Total PM Concentration (C_{TPM}), grain/dscf

$$C_{TPM} = C_S + C_{CPM}$$

where,

C_s	0.030	= filterable PM concentration, grain/dscf
C_{CPM}	0.002	= condensable PM concentration, grain/dscf
C_{TPM}	0.032	= grain/dscf

Total PM Emission Rate (ER_{TPM}), lb/hr

$$ER_{TPM} = PMR + ER_{CPM}$$

where,

PMR	0.17	= filterable PM emission rate, lb/hr
ER_{CPM}	0.01	= condensable PM emission rate, lb/hr
ER_{TPM}	0.18	= lb/hr

Alliance TECHNICAL GROUP

Location Harmony Grove Cemetery - Salem, MA
Source EU#2
Project No. AST-2023-3149

Run Number		Run 1	Run 2	Run 3	Average
Date		8/31/23	8/31/23	8/31/23	--
Start Time		8:12	11:13	2:44	--
Stop Time		9:12	12:14	3:44	--
Input Data - Outlet					
Moisture Fraction, dimensionless	BWS	0.1495	0.1272	0.1245	0.1337
Volumetric Flow Rate (M1-4), dscfm	Qs	644.4	669.2	692.4	668.7
Calculated Data - Outlet					
O_2 Concentration, % dry	C_{O_2}	8.32	12.69	10.01	10.34
CO_2 Concentration, % dry	C_{CO_2}	8.63	5.22	7.74	7.19
CO Concentration, ppmvd	C_{CO}	10.06	3.47	5.19	6.24
CO Concentration, ppmvd @ 7 % O_2	C_{COc7}	11.12	5.87	6.63	7.87
CO Emission Rate, lb/hr	ER_{CO}	0.03	0.01	0.02	0.02
NOx Concentration, ppmvd	C_{NOx}	104.61	73.16	124.00	100.59
NOx Concentration, ppmvd @ 7 % O_2	C_{NOxc7}	115.59	123.92	158.25	132.59
NOx Emission Rate, lb/hr	ER_{NOx}	0.48	0.35	0.62	0.48

Visible Emissions Evaluations

Project No.	AST-2023-3149	
Facility Name	Harmony Grove Cemetery	
Facility Location	Salem, MA	
Date	8/31/23	
Observation No.	1	
Source of Emissions	EU#	
Stack Height	22 ft	
Distance from Source	145 ft	
Direction from Source	NNW	
	Start	*End*
Time	8:12	9:12
Wind Direction (From)	NW	NW
Wind Speed	13 mph	12 mph
Ambient Temperature	62 °F	64 °F
Sky Conditions	Clear	Clear
Color of Background	Tree.	Tree.
Plume Color	N/A	N/A
Steam Plume? (y/n)	N	N
Attached to Stack? (y/n)	N/A	N/A

Draw the symbols in the diagram below.

Legend:

Sun: ✸ Wind: ⟹ North Direction: ⟹

plume and stack

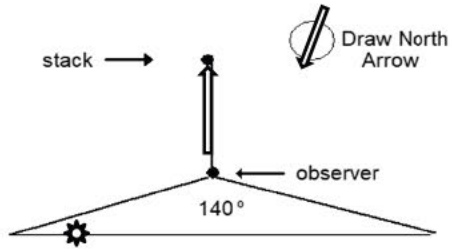

The highest six (6) minute rolling average was	1.0
Rolling Average > 20%	0
Rolling Average > 40%	0

Observations

min	0	15	30	45	min	0	15	30	45
0	0	0	0	0	30	0	0	0	0
1	0	0	0	0	31	0	0	0	0
2	0	0	0	0	32	0	0	0	0
3	0	0	0	0	33	0	0	0	0
4	0	0	0	0	34	0	0	0	0
5	0	0	0	0	35	0	0	0	0
6	0	0	0	0	36	0	0	0	0
7	0	0	0	0	37	0	0	0	0
8	0	0	0	0	38	0	0	0	0
9	0	0	0	0	39	0	0	0	0
10	0	0	0	0	40	0	0	5	5
11	0	0	0	0	41	5	5	5	0
12	0	0	0	0	42	0	0	0	0
13	0	0	0	0	43	0	0	0	0
14	0	0	0	0	44	0	0	0	0
15	0	0	0	0	45	0	0	0	0
16	0	0	0	0	46	0	0	0	0
17	0	0	0	0	47	0	0	0	0
18	0	0	0	0	48	0	0	0	0
19	0	0	0	0	49	0	0	0	0
20	0	0	0	0	50	0	0	0	0
21	0	0	0	0	51	0	0	0	0
22	0	0	0	0	52	0	0	0	0
23	0	0	0	0	53	0	0	0	0
24	0	0	0	0	54	0	0	0	0
25	0	0	0	0	55	0	0	0	0
26	0	0	0	0	56	0	0	0	0
27	0	0	0	0	57	0	0	0	0
28	0	0	0	0	58	0	0	0	0
29	0	0	0	0	59	0	0	0	0

Additional Comments

Limits: ≤ 5%,

Observer's Name Jim Rullo

Observer's Signature

Certification Agency Morrison

Certification Dates 4/11/23 *Lecture* 4/11/23 *Field*

Visible Emissions Evaluations

Project No.	AST-2023-3149	
Facility Name	Harmony Grove Cemetery	
Facility Location	Salem, MA	
Date	8/31/23	
Observation No.	2	
Source of Emissions	EU#	
Stack Height	23 ft	
Distance from Source	145 ft	
Direction from Source	NNW	
	Start	*End*
Time	11:12	12:12
Wind Direction (From)	N	N
Wind Speed	11 mph	10 mph
Ambient Temperature	68 °F	70 °F
Sky Conditions	Clear	Clear
Color of Background	Trees	Trees
Plume Color	N/A	N/A
Steam Plume? (y/n)	N	N
Attached to Stack? (y/n)	N/A	N/A

Draw the symbols in the diagram below.

Legend:

Sun: ✸ Wind: ⟹ North Direction: ⟹

plume and stack

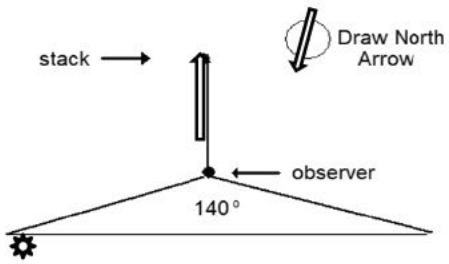

The highest six (6) minute rolling average was	0.2
Rolling Average > 20%	0
Rolling Average > 40%	0

Observations

min	0	15	30	45	min	0	15	30	45
0	0	0	0	0	30	0	0	0	0
1	0	0	0	0	31	0	0	0	0
2	0	0	0	0	32	0	0	0	5
3	0	0	0	0	33	0	0	0	0
4	0	0	0	0	34	0	0	0	0
5	0	0	0	0	35	0	0	0	0
6	0	0	0	0	36	0	0	0	0
7	0	0	0	0	37	0	0	0	0
8	0	0	0	0	38	0	0	0	0
9	0	0	0	0	39	0	0	0	0
10	0	0	0	0	40	0	0	0	0
11	0	0	0	0	41	0	0	0	0
12	0	0	0	0	42	0	0	0	0
13	0	0	0	0	43	0	0	0	0
14	0	0	0	0	44	0	0	0	0
15	0	0	0	0	45	0	0	0	0
16	0	0	0	0	46	0	0	0	0
17	0	0	0	0	47	0	0	0	0
18	0	0	0	0	48	0	0	0	0
19	0	0	0	0	49	0	0	0	0
20	0	0	0	0	50	0	0	0	0
21	0	0	0	0	51	0	0	0	0
22	0	0	0	0	52	0	0	0	0
23	0	0	0	0	53	0	0	0	0
24	0	0	0	0	54	0	0	0	0
25	0	0	0	0	55	0	0	0	0
26	0	0	0	0	56	0	0	0	0
27	0	0	0	0	57	0	0	0	0
28	0	0	0	0	58	0	0	0	0
29	0	0	0	0	59	0	0	0	0

Additional Comments

Limits: ≤ 5%,

Observer's Name Jim Rullo

Observer's Signature

Certification Agency Morrison

Certification Dates 4/11/23 *Lecture* 4/11/23 *Field*

Visible Emissions Evaluations

Project No.	AST-2023-3149	
Facility Name	Harmony Grove Cemetery	
Facility Location	Salem, MA	
Date	8/31/23	
Observation No.	3	
Source of Emissions	EU#	
Stack Height	23 ft	
Distance from Source	110 ft	
Direction from Source	NNE	
	Start	*End*
Time	14:44	15:44
Wind Direction (From)	N	NE
Wind Speed	10 mph	9 mph
Ambient Temperature	72 °F	70 °F
Sky Conditions	Clear	Clear
Color of Background	Tree	Tree
Plume Color	N/A	N/A
Steam Plume? (y/n)	n	n
Attached to Stack? (y/n)	N/A	N/A

Draw the symbols in the diagram below.
Legend:
Sun: Wind: North Direction:
plume and stack

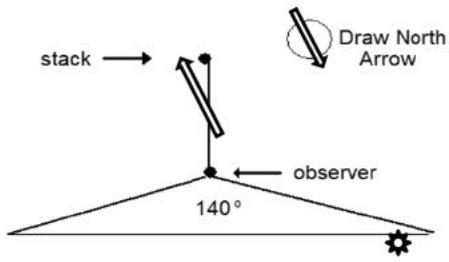

The highest six (6) minute rolling average was 0.0
Rolling Average > 20% 0
Rolling Average > 40% 0

Observations

min	0	15	30	45	min	0	15	30	45
0	0	0	0	0	30	0	0	0	0
1	0	0	0	0	31	0	0	0	0
2	0	0	0	0	32	0	0	0	0
3	0	0	0	0	33	0	0	0	0
4	0	0	0	0	34	0	0	0	0
5	0	0	0	0	35	0	0	0	0
6	0	0	0	0	36	0	0	0	0
7	0	0	0	0	37	0	0	0	0
8	0	0	0	0	38	0	0	0	0
9	0	0	0	0	39	0	0	0	0
10	0	0	0	0	40	0	0	0	0
11	0	0	0	0	41	0	0	0	0
12	0	0	0	0	42	0	0	0	0
13	0	0	0	0	43	0	0	0	0
14	0	0	0	0	44	0	0	0	0
15	0	0	0	0	45	0	0	0	0
16	0	0	0	0	46	0	0	0	0
17	0	0	0	0	47	0	0	0	0
18	0	0	0	0	48	0	0	0	0
19	0	0	0	0	49	0	0	0	0
20	0	0	0	0	50	0	0	0	0
21	0	0	0	0	51	0	0	0	0
22	0	0	0	0	52	0	0	0	0
23	0	0	0	0	53	0	0	0	0
24	0	0	0	0	54	0	0	0	0
25	0	0	0	0	55	0	0	0	0
26	0	0	0	0	56	0	0	0	0
27	0	0	0	0	57	0	0	0	0
28	0	0	0	0	58	0	0	0	0
29	0	0	0	0	59	0	0	0	0

Additional Comments

Limits: ≤ 5%,

Observer's Name Jim Rullo
Observer's Signature
Certification Agency Morrison
Certification Dates 4/11/23 *Lecture* 4/11/23 *Field*

[Natural Minor]
[AQM 3.11]

Application Receipt Document

General Information

Equipment ID number	01
Manufacturer	Matthews
Model	IE43-PPI
Serial Number	TBD
Source of Material to be Cremated	Human Remains
Capacity	150 Pounds/Hr
Maximum Amount Cremated Per Day	1800 Pounds/Hr
Please attach the Manufacturer's Specification Sheet and Manufacturer Emissions Testing Data (if available)	Matthews_PowerPakI_ENG (2).pdf

Combustion Chamber Information

Primary Combustion Chamber Length	8 Feet
Primary Combustion Chamber Cross-Sectional Area	7.4 Square Feet
Primary Combustion Chamber Effective Grate Area	26 Square Feet
Primary Combustion Chamber Effective Volume	64 Cubic Feet
Primary Combustion Chamber Capacity	150 Pounds/Hr
Primary Combustion Chamber Percent Excess Air (%)	100
Percent of Excess Air Applied as Overfire Air (%)	100
Percent of Excess Air Applied as Underfire Air (%)	0
Is the Primary Chamber Equipped With a Temperature Monitoring Device?	No
Temperature Monitoring Device Type	
Other (Specify)	
Primary Combustion Chamber Design Operating Range	From 0 °Fahrenheit to 2100 °Fahrenheit
Does the Crematory Have a Secondary Chamber?	Yes
Secondary Combustion Chamber Length	20 Feet
Secondary Combustion Chamber Cross-Sectional Area	2.5 Square Feet
Secondary Combustion Chamber Effective Volume	74 Cubic Feet
Secondary Combustion Chamber Retention Time	1.0 Seconds
Is the Secondary Chamber Equipped With a Temperature Monitoring Device?	Yes
Temperature Monitoring Device Type	Thermocouple
Other (Specify)	
Secondary Combustion Chamber Design Operating Range	From 1200 °Fahrenheit to 1800 °Fahrenheit
Total Heat Release	10100 BTU/hr/ft^3

Burner Information

Primary Combustion Chamber Burner Manufacturer	Matthews Environmental Solutions
Primary Combustion Chamber Burner Model	TJ150
Primary Combustion Chamber Burner Serial Number	TBD
Number of Burners in Primary Combustion Chamber	1
Design Heat Input to Primary Combustion Chamber Burner(s) (Million BTU/Hr)	1.0
Total Primary Combustion Chamber Combined Heat Input (Million BTU/Hr)	1.0
Maximum Primary Combustion Chamber Heat Input Capacity of Each Burner (Million BTU/Hr)	1.5
Type of Combustion Controls	Automatic
Describe Combustion Controls	Modulating.
Secondary Combustion Chamber Burner Manufacturer	Eclipse
Secondary Combustion Chamber Burner Model	TJ150
Secondary Combustion Chamber Burner Serial Number	TBD
Number of Burners in Secondary Combustion Chamber	1
Design Heat Input to Secondary Combustion Chamber Burner(s) (Million BTU/Hr)	1.2
Total Secondary Combustion Chamber Combined Heat Input (Million BTU/Hr)	1.2
Maximum Secondary Combustion Chamber Heat Input Capacity of Each Burner (Million BTU/Hr)	1.5
Type of Combustion Controls	Automatic
Describe Combustion Controls	Modulating.
Total Crematory Combined Heat Input (Million BTU/Hr)	3.0

Fuel Usage Information

Primary Fuel	Natural Gas
Other (specify)	
Maximum Annual Primary Fuel Consumption	11.2 MMCF
Heat Content of Primary Fuel	0.0010 BTU/CF
Maximum Firing Rate	0.003 MMCF/Hr
Percent Sulfur of Primary Fuel (%)	0
Is a Secondary Fuel used?	No
Secondary Fuel	
Other (specify)	
Maximum Annual Secondary Fuel Consumption	
Heat Content of Secondary Fuel	
Maximum Firing Rate	
Percent Sulfur of Secondary Fuel (%)	

Visible Emissions Monitoring Information

Proposed Technique Used to Monitor Visible Emissions	Opacity Monitor (COM)
Other (Describe)	
Describe the Continuous Opacity Monitoring System	Opacity monitor which sends unit into safe mode if smoke is detected.
Manufacturer	EMS
Model	Guardian
Serial Number	N/A
Please describe the proposed frequency, duration, and/or scenarios of Opacity Monitoring.	
Please upload any additional information regarding this equipment to support your application. Note: If you upload an Excel spreadsheet, you MUST include a PDF formatted version of that file.	Air Supply Ventilation Guide linesR3S1-0000330 Layout1 (1).pdf , Roof Penetration Detail For 26 and 29 Stack-Layout1.pdf , Technical Documents (2) (4).pdf , A-1 Floor Plan Code Data Elevations REV 3 Sprinkler Rm Relo 1.9.23 (3).pdf

On-Site Storage Information

Is There On-Site Storage Capacity for Human Remains?*	Yes
Storage Capacity	1025 Cubic Feet
Is There On-Site Storage Capacity for Animal Remains?	No
Storage Capacity	
Please upload the Manufacturer's Specification Sheets for the On-Site Storage Equipment	Amerikooler Configurator.pdf

Voluntary Emissions Limitation Request Information

Are You Requesting Any Voluntary Emission Limitations to Avoid Major Source Status, Minor New Source Review, MACT, NSPS, etc.?	No
Describe Any Proposed Emission Limitations	

Voluntary Operating Limitation Request Information

Are You Requesting Any Voluntary Operating Limitations to Avoid Major Source Status, Minor New Source Review, MACT, NSPS, etc.?	No
Describe Any Proposed Operating Limitations	

Additional Information

Is There Any Additional Information Pertinent to this Application?*	No
Describe	
Please upload any additional information regarding this equipment to support your application. Note: If you upload an Excel spreadsheet, you MUST include a PDF formatted version of that file.	

MANUFACTURER'S SPECIFICATION SHEET AND MANUFACTURER EMISSIONS TESTING DATA

PowerPak

The Basic Essential



Smoke-Buster™ 138 Emission Control Ideal for New or Low-Volume Crematories Designed for 4 cremations per day Automatic operation, most fuel-efficient in its class

**Shown above with optional M-pyre® control panel

Just Right for Your Business

The PowerPak I Cremation System is designed to meet the needs of low-volume cremation businesses that perform four or less cremations each day. Whether you're just starting out, or you're adding cremation as a new service for the families you serve, you want reliable equipment from a manufacturer you can trust. That's why we've taken our decades of field-proven innovation and experience and engineered them into every detail of the PowerPak I.

The PowerPak I is just right for your business. It's fully automated, and can be modified to work with our advanced M-pyre 2.0 remote operating and monitoring system. And because it's the fastest and most fuel-efficient cremator in its class, you'll save time and money that you can use to build your business for the future.

Ready To Go

Automatic Operation

Operator Safety

The Future Of Cremation:
Matthews Gives You More

Quiet Operation

Angled Burners



Added Insulation

The Power of Partnership

PowerPak I Specifications

Get the Most from Your Matthews Cremator



[E]

[B]

[C]

System Accessories

[A]

[D]

[A] ECP-200 Electric Cremated Remains Processor

- Reduces cremated remains to fit standard-sized urns
- Average processing time ≤ 30 seconds
- Quiet and dust-proof

[B] VPS-1 Processing Station

- Recovers dust when transferring cremated remains for operator safety
- Ventless design eliminates wall or ceiling openings
- Built-in overhead lighting adds convenience and safety
- Steel frame construction, finished with heavy-gauge stainless steel

[C] Auto-Loader

- Increases production and enhances operator safety
- Extends the cremation chamber floor life
- Offers a professional presentation during family viewing

- Most advanced cremation technology through our M-pyre®2.0 system with intuitive logic control (ILC).
- Allows internet connection to enjoy the ability to remote preheat, monitor the cremator activity, view performance reports, track maintenance and communicate directly to your Matthews team.

29519 ENG 202104

[D] Hydraulic Lift Table - LT1BS

- Includes battery and scale

[E] Three-Body Cooler

- Safe storage until final disposition
- Thermostatically controlled system maintains constant temperature
- Removable shelves accommodate a mortuary cart or caskets

[ ] M-pyre® 2.0

ADDITIONAL INFORMATION REGARDING THIS EQUIPMENT TO SUPPORT YOUR APPLICATION

GENERAL NOTES
IF LOCAL CODES ARE MORE STRINGENT THAN THESE RECOMMENDATIONS THE LOCAL CODES MUST BE FOLLOWED.

IT IS NOT PRACTICAL TO PROVIDE AIR CONDITIONING IN THE CREMATORY ROOM. IT IS MORE EFFICIENT TO CREATE A SMALL, AIR CONDITIONED OPERATOR'S OFFICE WITHIN THE CREMATORY.

STANDARD METHOD OF AIR SUPPLY

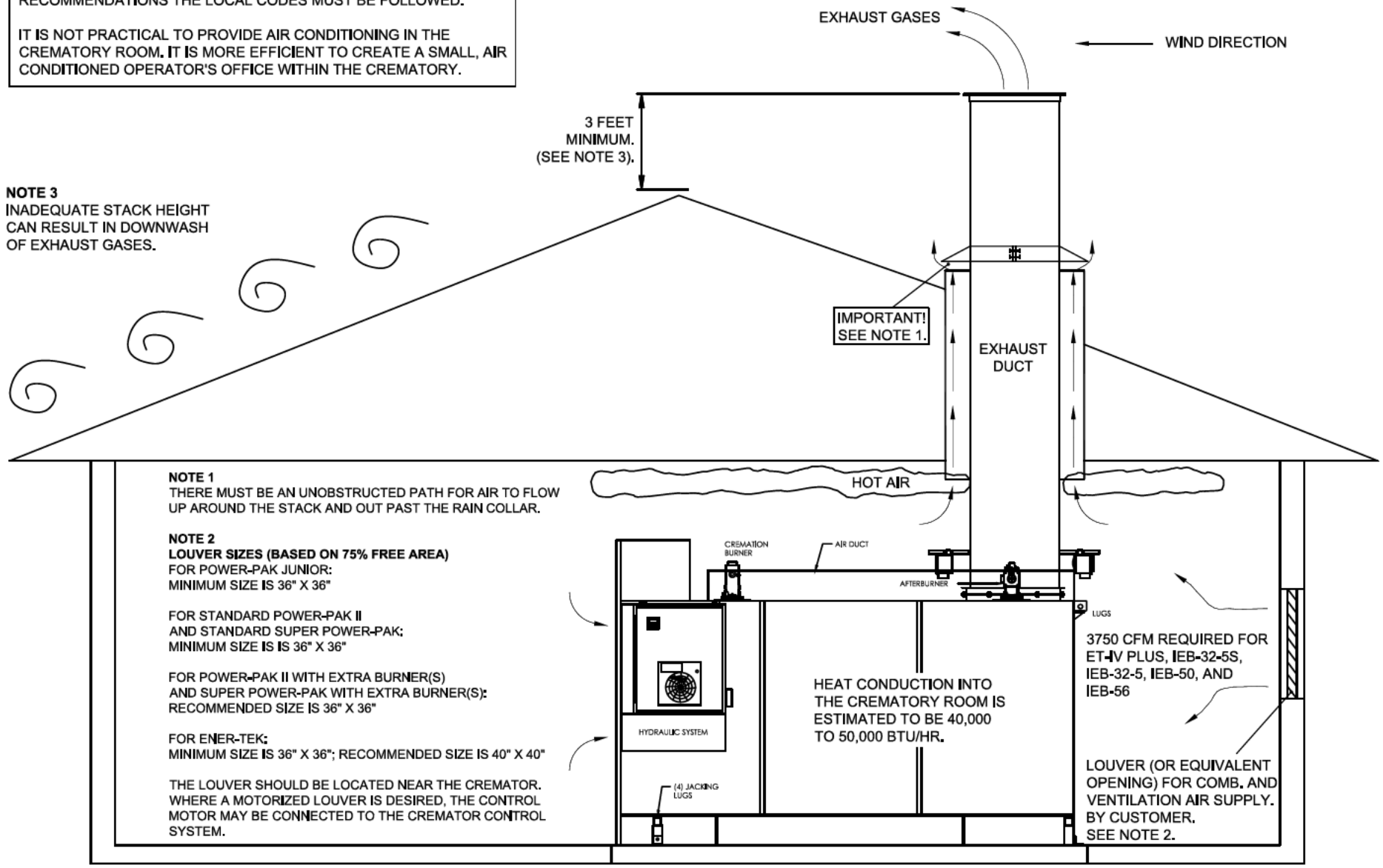

Matthews
ENVIRONMENTAL SOLUTIONS
2045 Sprint Boulevard
Apopka, Florida 32703
USA

AIR SUPPLY GUIDELINES

FOR MES CREMATION EQUIPMENT

DRAWN BY:	JG	DATE:	09.06.2010	REVISION:	
APPROVED BY:	–	DATE:	–	3	06.11.2021 CFM FOR MULTI–BLOWER UNITS
SCALE:	1/4" = 1'–0"	SHEET:	OF:		
DWG FILE:					
DWG NUMBER:			Layout1		

THIS DRAWING CONTAINS CONFIDENTIAL AND PROPRIETARY INFORMATION OF MATTHEWS ENVIRONMENTAL SOLUTIONS. UNLESS OTHERWISE SPECIFIED IN WRITING, MATTHEWS ENVIRONMENTAL SOLUTIONS IS THE OWNER OF THIS DRAWING AND THE INFORMATION CONTAINED HEREIN. THIS DRAWING AND THE CONTAINED INFORMATION IS CONFIDENTIAL, PROPRIETARY, AND MAY NOT BE REPRODUCED OR DISCLOSED TO THIRD PARTIES WITHOUT THE EXPRESS WRITTEN CONSENT OF MATTHEWS ENVIRONMENTAL SOLUTIONS. IT IS ISSUED FOR ILLUSTRATIVE PURPOSES ONLY AND IS NOT TO BE USED FOR ANY PURPOSE, INCLUDING, BUT NOT LIMITED TO, AS A CONSTRUCTION DRAWING OR FOR A REQUEST FOR BID TO A THIRD PARTY. THIS DRAWING IS PROVIDED WITHOUT ANY WARRANTY EXPRESSED OR IMPLIED. ANY USE OF THIS DRAWING WILL BE AT THE RISK AND SOLE RESPONSIBILITY OF THE USER.

CREMATOR CLEARANCES

	RECOMMENDED	MINIMUM
TOP:	2 FEET [610 mm]	6 INCHES [152 mm]
CABINET SIDE:	4 FEET [1.22 m]	4 FEET [1.22 m]
OTHER SIDE:	2 FEET [610 mm]	6 INCHES [152
REAR:	4 FEET [1.22 m]	32 INCHES [812
(REAR REFERS TO THE BACK PLATE OF THE MACHINE. NOT THE WHISPER SHIELD)		
STACK:	6 INCHES [152 mm]	6 INCHES [152

STACK INSTALLATION INSTRUCTIONS

1. APPLY A 1/2" THICK MORTAR JOINT TO EXPOSED REFRACTORY SURFACE IN STACK RING. LOWER THE BASE STACK SECTION (B) ONTO STACK RING (A) AND FASTEN WITH HARDWARE PROVIDED (NO MORE THAN (2) STACK SECTIONS SHALL BE LIFTED TOGETHER). REPEAT PROCESS FOR REMAINING STACK SECTIONS. IF SECTIONS OF VARYING LENGTHS ARE SUPPLIED, ASSEMBLE AS TO AVOID FLANGES & LIFTING EYES INTERFERING WITH RAIN COLLAR LOCATION.
2. INSTALL STORM COLLAR ON STACK, 3" [76 mm] ABOVE NON-COMBUSTIBLE LINER (FLASHING), ALLOWING FOR PROPER VENTILATION (SEE DETAIL).
3. APPLY A 1/4" [6 mm] BEAD OF HIGH-TEMPERATURE SILICON SEALANT (PROVIDED BY MES) TO THE JOINT BETWEEN THE STORM COLLAR (C) AND THE STACK (B).
4. STORM COLLAR IS FURNISHED BY MES. THE NON-COMBUSTIBLE LINER (FLASHING) TO BE PROVIDED BY THE OTHERS.
5. IF FIFTY PERCENT OF THE STACK LENGTH IS ABOVE THE ROOF, GUY WIRES MAY BE REQUIRED. CONSULT WITH YOUR MES REP.
6. RAIN CAP NOT REQUIRED.

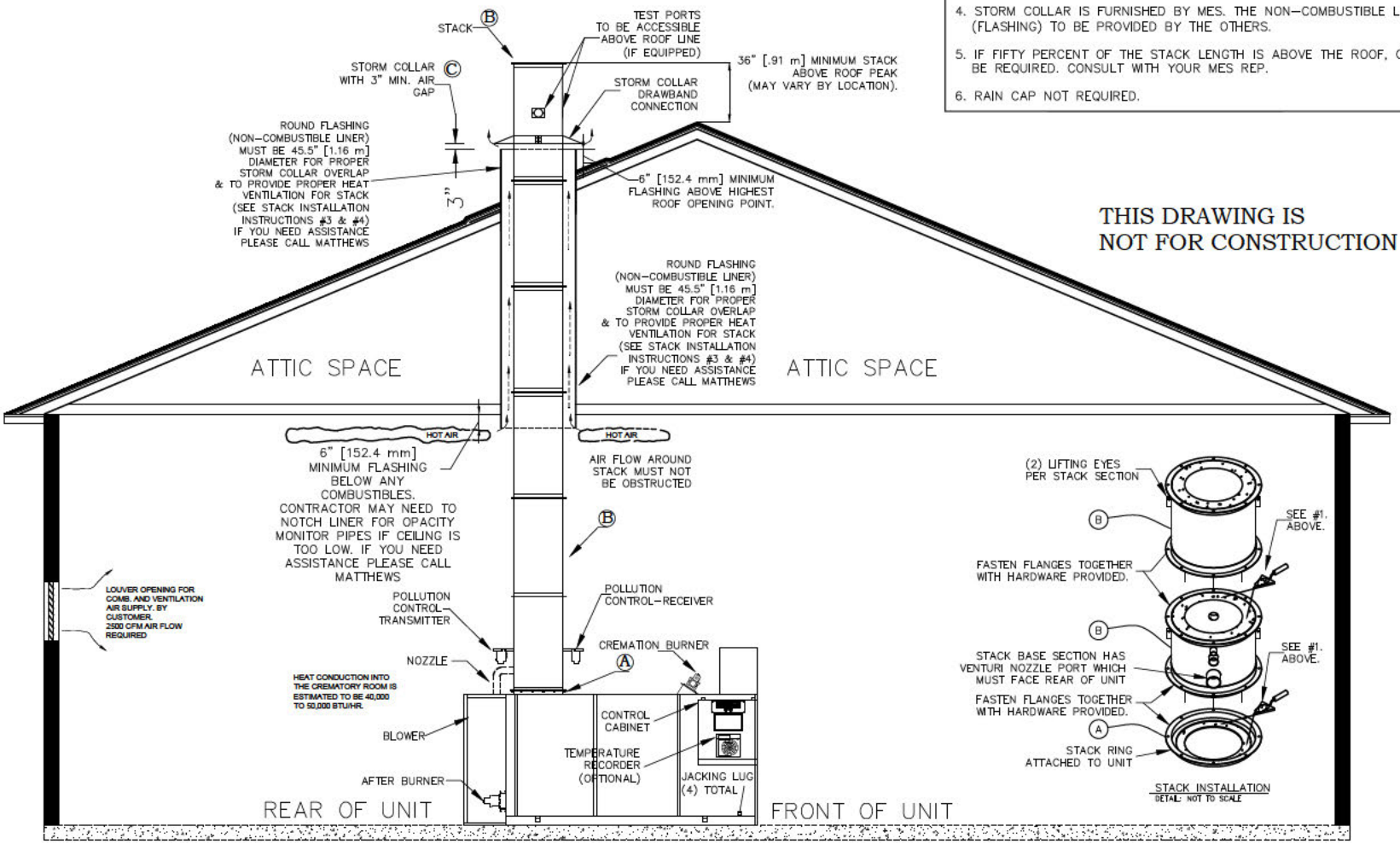

THIS DRAWING IS
NOT FOR CONSTRUCTION

Matthews
ENVIRONMENTAL SOLUTIONS
2045 Sprint Boulevard
Apopka, Florida 32703
USA

ROOF PENETRATION DETAIL

26" AND 29" REFRACTORY LINED STACK
INSTALLATION INSTRUCTIONS AND DETAIL

DRAWN BY:	SC	DATE:	10-23-17	REVISION:
APPROVED BY:	-	DATE:	-	
SCALE:	1/8" = 1'-0"	SHEET:	OF:	
DWG FILE:				
DWG NUMBER:			Layout1	

THIS DRAWING CONTAINS CONFIDENTIAL AND PROPRIETARY INFORMATION OF MATTHEWS ENVIRONMENTAL SOLUTIONS. UNLESS OTHERWISE SPECIFIED IN WRITING, MATTHEWS ENVIRONMENTAL SOLUTIONS IS THE OWNER OF THIS DRAWING AND THE INFORMATION CONTAINED HEREIN. THIS DRAWING AND THE CONTAINED INFORMATION IS CONFIDENTIAL, PROPRIETARY, AND MAY NOT BE REPRODUCED OR DISCLOSED TO THIRD PARTIES WITHOUT THE EXPRESS WRITTEN CONSENT OF MATTHEWS ENVIRONMENTAL SOLUTIONS. IT IS ISSUED FOR ILLUSTRATIVE PURPOSES ONLY AND IS NOT TO BE USED FOR ANY PURPOSE, INCLUDING, BUT NOT LIMITED TO, AS A CONSTRUCTION DRAWING OR FOR A REQUEST FOR BID TO A THIRD PARTY. THIS DRAWING IS PROVIDED WITHOUT ANY WARRANTY EXPRESSED OR IMPLIED. ANY USE OF THIS DRAWING WILL BE AT THE RISK AND SOLE RESPONSIBILITY OF THE USER.

Matthews ENVIRONMENTAL SOLUTIONS

Cremator Process Flow Diagram

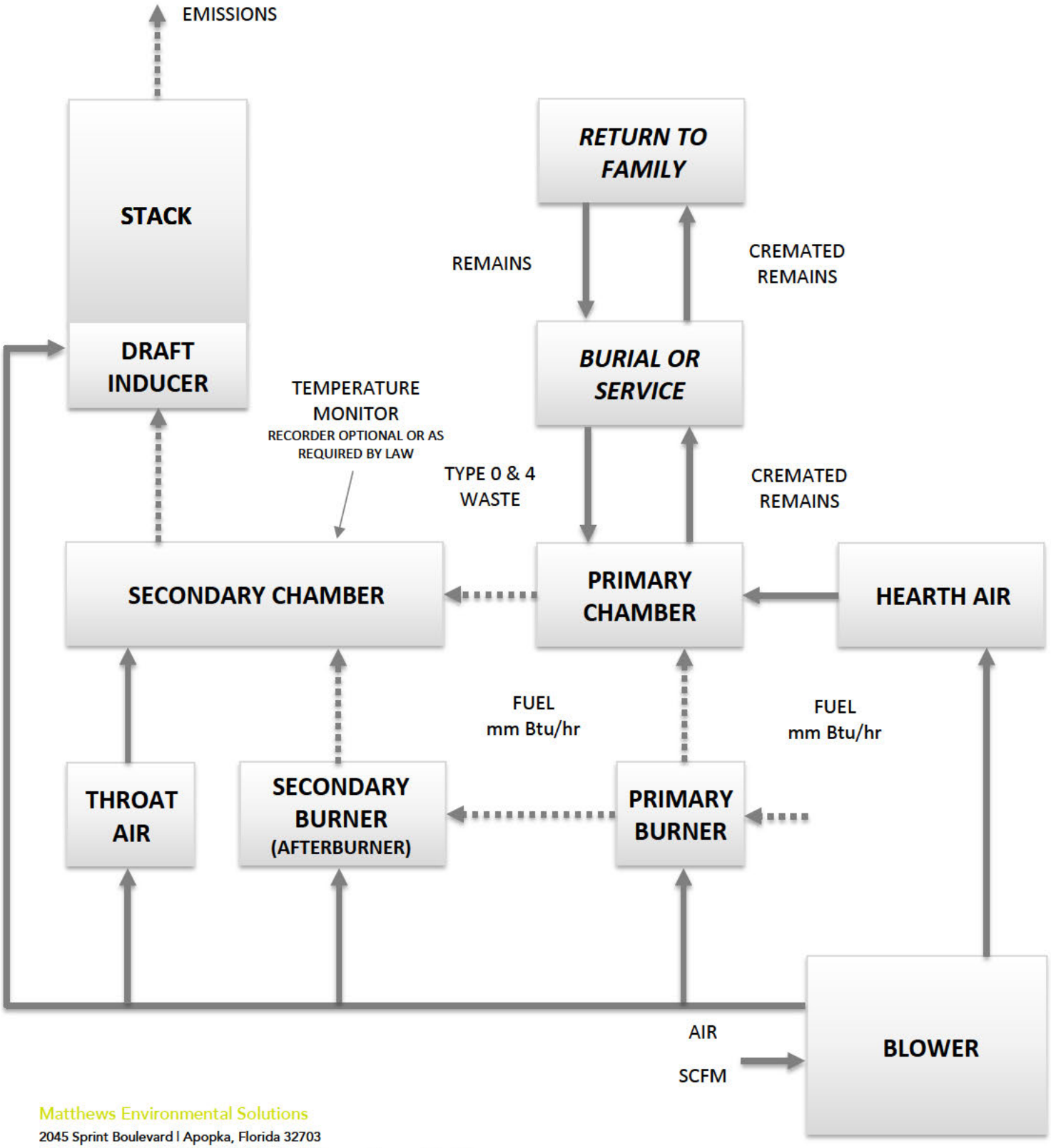

Matthews Environmental Solutions
2045 Sprint Boulevard | Apopka, Florida 32703
O: 407-886-5533 | F: 407-886-5990 | www.matthewsenvironmentalsolutions.com

Matthews INTERNATIONAL
Matthews Environmental Solutions is a (MATW) Matthews International company

Rev 07.27.18

SPECIFICATIONS- Model Power-Pak I

1. Equipment Type	Model Power-Pak I
A. Model No.	IE43-PPI
B. Underwriters Laboratories Listing and File No.	87E8; MH14647
2. Dimensions	
A. Footprint	12’ – 6 ½ ” x 5’ – 3” (3.82 m x 1.60 m)
B. Maximum Length	14’ – 8” (4.47 m)
C. Maximum Width	6’ -5” (1.96 m)
D. Maximum Height	8’ - 4” (2.54 m)
E. Chamber Loading Opening	25 ¾ ” H x 39 ½ ” W (654 mm x 1003 mm)
3. Weight	23,400 lbs. (10,614 kg)
4. Utility/Air Requirements	
A. Gross Gas Input, Natural or LP Gas	2,700,000 BTU/hr. (2,848,651 kJ/h) 3,000,000 BTU/hr. (3,165,168 kJ/h) if operating temperature is greater than 1,600° F (871° C)
Running Gas Pressure, Natural Gas	11 inches (279.4 mm) water column or greater
Running Gas Pressure, LP Gas	11 inches (279.4 mm) water column or greater
B. Electrical Supply	230 volt, 3Ø or 1Ø, 50/60 hz (other available)
C. Air Supply	2,500 cfm (70.8 standard m^3/min)
5. Incineration Capacity	150 lbs./hr. (68 kg/h)
6. Typical Loading Capacity of Waste Types	750 lbs. (340.2 kg)
7. Construction and Safety Standards	Incineration Institute of America, Underwriters Laboratories, Canadian Standards Association
8. Steel Structure Construction	
A. Frame	2” (51 mm) square tubing
B. Front/Rear Plates	3/8” (9.5 mm) plate
C. Floor Plates	3/16” (5 mm) plate
D. Outer Side Casing	12 gauge (3 mm) plate
E. Inner Side Casing	12 gauge (3 mm) plate
9. Stack Construction	
A. Inner Wall	3” (76 mm) castable
B. Outer Wall	12 gauge (3 mm) stainless steel sheet with welded seams. (unlined stack available)
10. Draft Nozzle Construction	Schedule 40 type 316 s.s. pipe, welded connections
11. Main Chamber Door Construction	
A. Steel Shell	3/16” (5 mm) steel, welded with reinforcement
B. Outer Refractory	1” (25 mm) insulating block
C. Inner Refractory	4½” (110 mm) insulating firebrick

THIS DOCUMENT CONTAINS CONFIDENTIAL AND PROPRIETARY INFORMATION OF MATTHEWS ENVIRONMENTAL SOLUTIONS & MAY NOT BE DISCLOSED TO THIRD PARTIES WITHOUT THE WRITTEN CONSENT OF MATTHEWS. UNLESS OTHERWISE SPECIFIED IN WRITING, MATTHEWS ENVIRONMENTAL SOLUTIONS IS THE OWNER OF THIS DOCUMENT AND THE INFORMATION CONTAINED HEREIN

SPECIFICATIONS- Model Power-Pak I

12. Primary Chamber Wall Construction
    - A. Outer Casing Wall ..... 12 gauge (3 mm) sheet
    - B. Inner Frame/Air Compartment ..... 2” (51 mm) air compartment
    - C. Inner Casing Wall ..... 12 gauge (3 mm) sheet
    - D. Outer Refractory Wall ..... 5” (127 mm) insulating block
    - E. Inner Refractory Wall ..... 4½” (114 mm) firebrick

13. Secondary Chamber Wall Construction
    - A. Outer Casing Wall ..... 12 gauge (3 mm) sheet
    - B. Inner Frame/Air Compartment ..... 2” (51 mm) air compartment
    - C. Inner Casing Wall ..... 12 gauge (3 mm) sheet
    - D. Outer Refractory Wall ..... 6” (152 mm) insulating block
    - E. Inner Refractory Wall ..... 4½” (114 mm) firebrick

14. Refractory Temperature Ratings
    - A. Standard Firebrick ..... 3,100° F. (1704° C)
    - B. Insulating Firebrick ..... 2,600° F. (1427° C)
    - C. Castable Refractory (Hearth) ..... 2,550° F. (1399° C)
    - D. Castable Refractory ..... 2,550° F. (1399° C)
    - E. Insulating Block ..... 1,900° F. (1038° C)
    - F. Bonding Mortar ..... 3,200° F. (1760° C)

15. Chamber Volumes (not including external flues, stacks or chimneys)
    - A. Primary Chamber ..... 64 cubic feet (1.8 m^3)
    - B. Secondary Chamber ..... 74 cubic feet (2.1 m^3)

16. Emission Control Features
    - A. Secondary Chamber with Afterburner ..... Included
    - B. Opacity Monitor and Controller with Visual and Audible Alarms ..... Included
    - C. Auxiliary Air Control System ..... Included
    - D. Microprocessor Temperature Control System .... Included

17. Operating Temperatures
    - A. Primary Chamber ..... 32° F. - 1,800° F. (0° C - 982° C)
    - B. Secondary Chamber ..... 1,400° F. - 1,800° F. (760° C - 982° C) as required

18. Secondary Chamber Retention Time ..... > 1 second

19. Ash Removal ..... Door functions as a heat shield. Sweep out beneath front door into hopper that fills collection pan.

THIS DOCUMENT CONTAINS CONFIDENTIAL AND PROPRIETARY INFORMATION OF MATTHEWS ENVIRONMENTAL SOLUTIONS & MAY NOT BE DISCLOSED TO THIRD PARTIES WITHOUT THE WRITTEN CONSENT OF MATTHEWS. UNLESS OTHERWISE SPECIFIED IN WRITING, MATTHEWS ENVIRONMENTAL SOLUTIONS IS THE OWNER OF THIS DOCUMENT AND THE INFORMATION CONTAINED HEREIN

SPECIFICATIONS- Model Power-Pak I

20. Safety Interlocks
    - A. High Gas Pressure ..... Optional
    - B. Low Gas Pressure ..... Optional
    - C. Blower Air Pressure ..... Included
    - D. Door Position ..... Included
    - E. Opacity ..... Included
    - F. Motor Starter Function ..... Included
    - G. Chamber Temperature ..... Included
    - H. Motor Overload ..... Included
    - I. Flame Quality ..... Included
    - J. Burner Safe Start ..... Included
    - K. Cremation Burner/Door Interlock ..... Available upon Env. Agency requirements

21. Burner Description ..... The nozzle mix burners used on this cremation equipment are industrial quality and designed for incinerator use.

22. Ultraviolet Flame Detection ..... Ultraviolet flame detection has proven to be the most reliable means of flame safety. The system is completely sealed in a quartz capsule to eliminate problems, caused by moisture and dust created in the cremation process, which effect flame rod detectors.

23. Operating Panel Indicators
    - A. Safe Run ..... Included
    - B. Door Closed ..... Included
    - C. Pollution Alarm ..... Included
    - D. Afterburner On (Secondary Burner) ..... Included
    - E. Afterburner (Secondary Burner) Reset ..... Included
    - F. Cremation Burner Reset ..... Included
    - G. High Fire Cremation Burner ..... Included
    - H. Low Fire Cremation Burner ..... Included
    - I. Hearth Air ..... Included
    - J. Throat Air Off ..... Included

24. Automatic Timer Functions
    - A. Master Cycle ..... Included
    - B. Hearth Air ..... Included
    - C. Throat Air ..... Included
    - D. Pollution Monitoring ..... Included
    - E. Cremation Burner Hi - Low ..... Included
    - F. Cool Down ..... Included

25. Exterior Finish
    - A. Primer ..... 2 coats rust inhibiting
    - B. Finish ..... 2 coats textured finish

THIS DOCUMENT CONTAINS CONFIDENTIAL AND PROPRIETARY INFORMATION OF MATTHEWS ENVIRONMENTAL SOLUTIONS & MAY NOT BE DISCLOSED TO THIRD PARTIES WITHOUT THE WRITTEN CONSENT OF MATTHEWS. UNLESS OTHERWISE SPECIFIED IN WRITING, MATTHEWS ENVIRONMENTAL SOLUTIONS IS THE OWNER OF THIS DOCUMENT AND THE INFORMATION CONTAINED HEREIN

SPECIFICATIONS- Model Power-Pak I

26.	Start-Up and Training.....	Startup of cremation equipment and training of operators to properly operate and maintain the equipment is performed on-site under actual operating conditions. Included is a comprehensive owner's manual, with details on the equipment, its components and proper operation.
27.	Environmental Submittals	Complete technical portion of state environmental permits. Engineering calculations, technical data, existing stack test results and equipment blueprints provided.

THIS DOCUMENT CONTAINS CONFIDENTIAL AND PROPRIETARY INFORMATION OF MATTHEWS ENVIRONMENTAL SOLUTIONS & MAY NOT BE DISCLOSED TO THIRD PARTIES WITHOUT THE WRITTEN CONSENT OF MATTHEWS. UNLESS OTHERWISE SPECIFIED IN WRITING, MATTHEWS ENVIRONMENTAL SOLUTIONS IS THE OWNER OF THIS DOCUMENT AND THE INFORMATION CONTAINED HEREIN

NOTES:

1) CONTROL CABINET CAN BE MOUNTED ON THE LEFT OR RIGHT SIDE, OR REMOTELY
2) MAIN ELECTRICAL CONNECTION LOCATED IN CONTROL CABINET
3) CHAMBER WIDTH IS 39" [0.99m]
4) STACK CAN BE LOCATED ON THE BACK LEFT OR BACK RIGHT OF UNIT

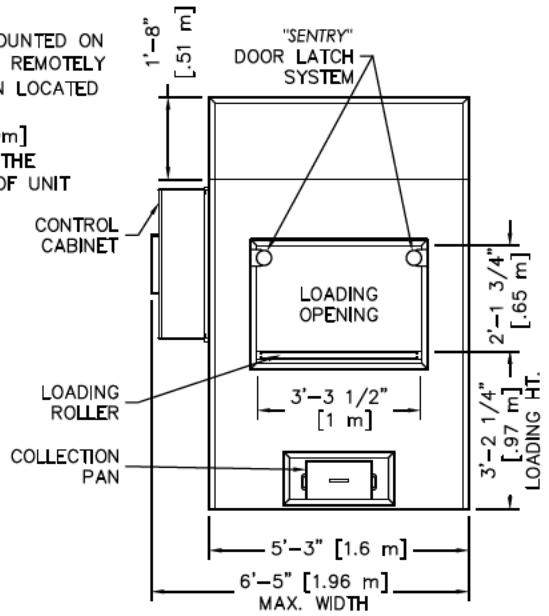

FRONT ELEVATION

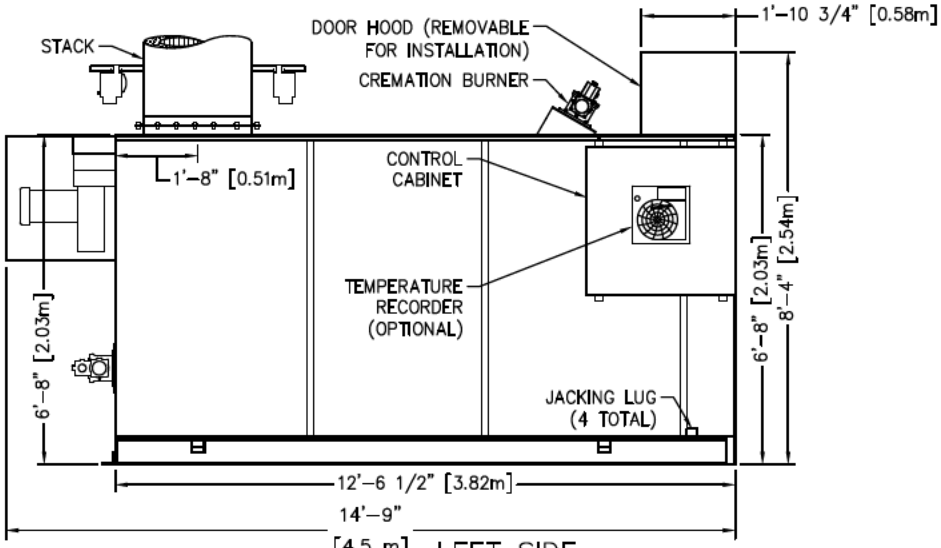

LEFT SIDE ELEVATION

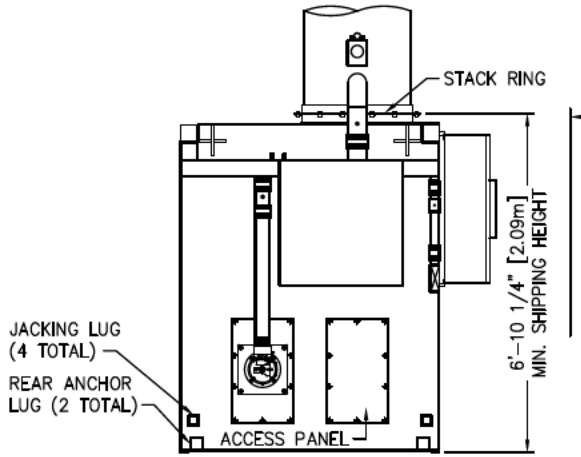

REAR ELEVATION

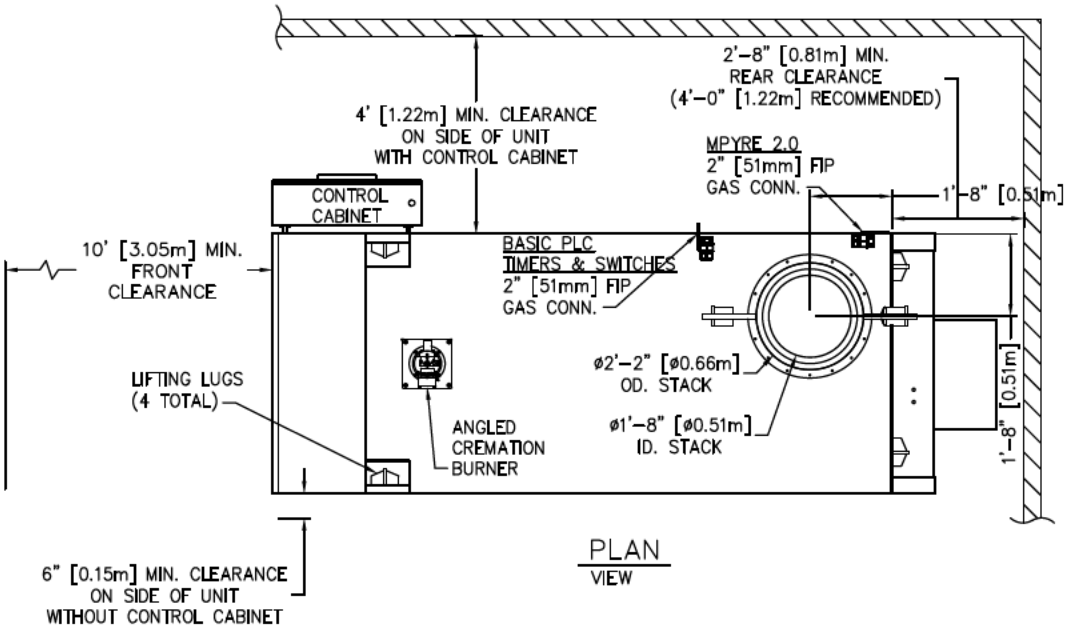

PLAN VIEW

Matthews
ENVIRONMENTAL SOLUTIONS
2045 Sprint Boulevard
Apopka, Florida 32703
USA

POWER-PAK I

PLAN & ELEVATIONS INCL: CLEARANCES, REQUIREMENTS & RECOMMENDATIONS

DRAWN BY: JG	DATE: 03.20.2014	REVISION:			
APPROVED BY:	DATE:	5	10.21.2015	WHISPER SHIELD ADDED	
SCALE: 1/4" = 1'-0"	SHEET: OF:	6	03.15.2017	WHISPER SHIELD LENGTH +1"	
DWG FILE:		7	07.21.2017	REMOVE MAIN ELEC FROM TOP OF UNIT	
DWG NUMBER: $(GETVAR,??)		8	09.19.2017	CHANGED MIN. FRONT CLEAR. TO 10'	

Q:\ENG\MCD NEW SYSTEM\OPERATIONS\PPI\SHOP\PPI_09-003-004.DWG

THIS DRAWING CONTAINS CONFIDENTIAL AND PROPRIETARY INFORMATION OF MATTHEWS ENVIRONMENTAL SOLUTIONS. UNLESS OTHERWISE SPECIFIED IN WRITING, MATTHEWS ENVIRONMENTAL SOLUTIONS IS THE OWNER OF THIS DRAWING AND THE INFORMATION CONTAINED HEREIN. THIS DRAWING AND THE CONTAINED INFORMATION IS CONFIDENTIAL, PROPRIETARY, AND MAY NOT BE REPRODUCED OR DISCLOSED TO THIRD PARTIES WITHOUT THE EXPRESS WRITTEN CONSENT OF MATTHEWS ENVIRONMENTAL SOLUTIONS. IT IS ISSUED FOR ILLUSTRATIVE PURPOSES ONLY AND IS NOT TO BE USED FOR ANY PURPOSE, INCLUDING, BUT NOT LIMITED TO, AS A CONSTRUCTION DRAWING OR FOR A REQUEST FOR BID TO A THIRD PARTY. THIS DRAWING IS PROVIDED WITHOUT ANY WARRANTY EXPRESSED OR IMPLIED. ANY USE OF THIS DRAWING WILL BE AT THE RISK AND SOLE RESPONSIBILITY OF THE USER.

CREMATOR CLEARANCES

	RECOMMENDED		MINIMUM	
TOP: (2)	2 FEET	[610 mm]	6 INCHES	[152 mm]
CABINET SIDE:	4 FEET	[1.22 m]	4 FEET	[1.22 m]
OTHER SIDE:	2 FEET	[610 mm]	6 INCHES	[152 mm]
FRONT:	10+ FEET	[3.05+ m]	10 FEET	[3.05 m]
REAR:	4 FEET	[1.22 m]	32 INCHES	[812 mm]
STACK:	9 INCHES	[229 mm]	6 INCHES	[152 mm]

1. FOR CLEARANCES OTHER THAN THOSE SHOWN, OR FOR SPECIAL REQUIREMENTS, CONSULT YOUR MES REP.

(2.) FROM HIGHEST POINT ON UNIT.

3. CONTROL CABINET MOUNTS ON UNIT'S LEFT OR RIGHT SIDES, OR REMOTELY. (SEE PLAN VIEW, SHEET 1).

4. REAR OF UNIT REFERS TO THE "BACK PLATE", RATHER THAN THE BACK OF THE "WHISPER SHIELD". (SEE PLAN VIEW, SHEET 1).

CREMATOR REQUIREMENTS

FUEL: A PRESSURE REGULATOR ADJUSTABLE TO 11" [279 mm] W.C. FOR NATURAL GAS, OR 11" [279 mm] W.C. FOR LP GAS.

CAPACITY: RANGES FROM 2.0 TO 3.0 MILLION BTU/HR [2.1 TO 3.1 MILLION KILOJOULES/HR] DEPENDING UPON AMOUNT OF BURNERS.

ELECTRICAL: 230 VOLT, 3ø, (40A BREAKER) AND 115v (10A BREAKER), OR 230 VOLT, 1ø, (70A BREAKER) AND 115v (10A BREAKER) 50/60 HERTZ

AIR: LOUVER NEAR THE REAR OF THE UNIT CAPABLE OF PASSING 2,500 CU FT/MIN [70.8 CU M/MIN] OF FREE AIR (36" X 36") [914 mm X 914 mm].

STACK INSTALLATION INSTRUCTIONS

1. APPLY A 1/2" THICK MORTAR JOINT TO EXPOSED REFRACTORY SURFACE IN STACK RING. LOWER THE BASE STACK SECTION (B) ONTO STACK RING (A) AND FASTEN WITH HARDWARE PROVIDED (NO MORE THAN (2) STACK SECTIONS SHALL BE LIFTED TOGETHER). REPEAT PROCESS FOR REMAINING STACK SECTIONS. IF SECTIONS OF VARYING LENGTHS ARE SUPPLIED, ASSEMBLE AS TO AVOID FLANGES & LIFTING EYES INTERFERING WITH RAIN COLLAR LOCATION.

2. INSTALL STORM COLLAR ON STACK, 3" [72 mm] ABOVE NON-COMBUSTIBLE LINER (FLASHING), ALLOWING FOR PROPER VENTILATION (SEE DETAIL).

3. APPLY A 1/4" [6 mm] BEAD OF HIGH-TEMPERATURE SILICON SEALANT (PROVIDED BY MES) TO THE JOINT BETWEEN THE STORM COLLAR (C) AND THE STACK (B).

4. STORM COLLAR IS FURNISHED BY MES. THE NON-COMBUSTIBLE LINER (FLASHING) TO BE PROVIDED BY THE OTHERS.

5. IF FIFTY PERCENT OF THE STACK LENGTH IS ABOVE THE ROOF, GUY WIRES MAY BE REQUIRED. CONSULT WITH YOUR MES REP.

6. RAIN CAP NOT REQUIRED.

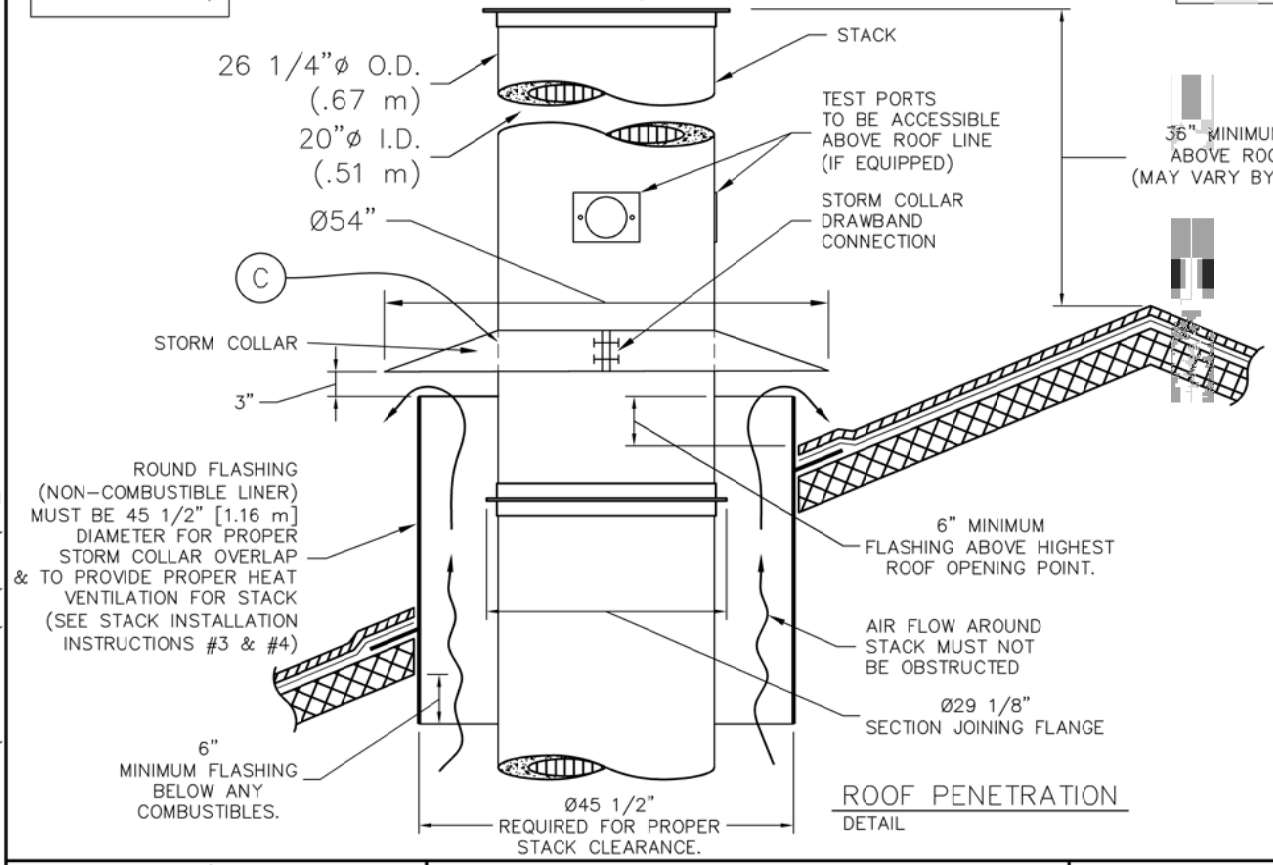

ROOF PENETRATION
DETAIL

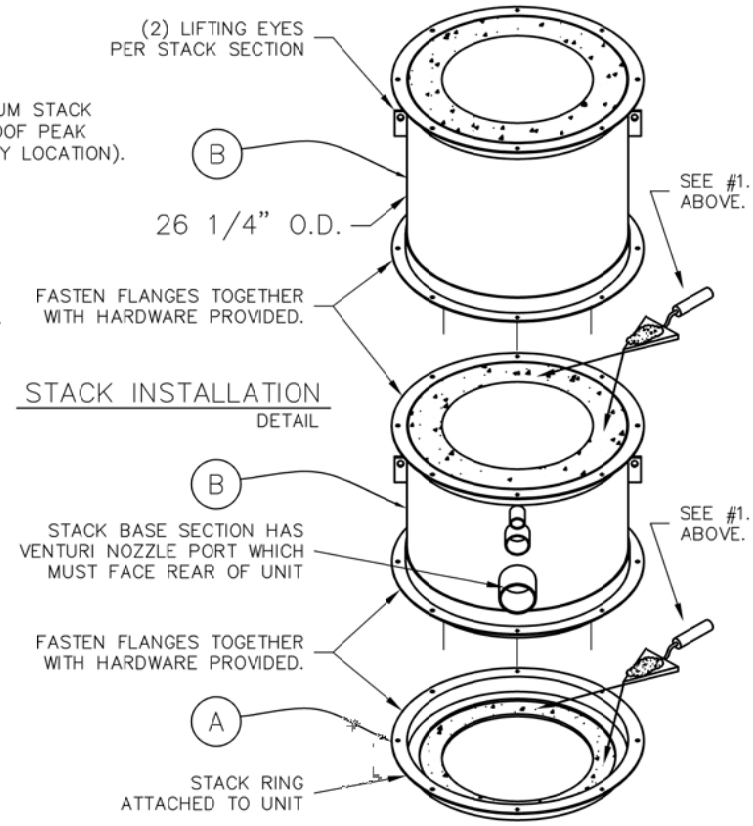

STACK INSTALLATION
DETAIL

Matthews
ENVIRONMENTAL SOLUTIONS
2045 Sprint Boulevard
Apopka, Florida 32703
USA

POWER-PAK I

STACK DETAILS, CLEARANCES & INSTALLATION INSTRUCTIONS.
REFRACTORY STACK DETAIL

DRAWN BY:	JG	DATE:	03.14.2014	REVISION:		
APPROVED BY:	–	DATE:	–	3	12.09.2014	GENERAL MODIFICATIONS 2
SCALE:	1/2" = 1'-0"	SHEET:	OF:	4	12.23.2014	GENERAL MODIFICATIONS 3
DWG FILE:				5	09.20.2017	CHANGED MIN. FRONT CLEAR. TO 10'
DWG NUMBER:		$(GETVAR,??)				

O:\ENG\MCD NEW SYSTEM\OPERATIONS\PPI\SHOP\PPI_09-006.DWG

THIS DRAWING CONTAINS CONFIDENTIAL AND PROPRIETARY INFORMATION OF MATTHEWS ENVIRONMENTAL SOLUTIONS. UNLESS OTHERWISE SPECIFIED IN WRITING, MATTHEWS ENVIRONMENTAL SOLUTIONS IS THE OWNER OF THIS DRAWING AND THE INFORMATION CONTAINED HEREIN. THIS DRAWING AND THE CONTAINED INFORMATION IS CONFIDENTIAL, PROPRIETARY, AND MAY NOT BE REPRODUCED OR DISCLOSED TO THIRD PARTIES WITHOUT THE EXPRESS WRITTEN CONSENT OF MATTHEWS ENVIRONMENTAL SOLUTIONS. IT IS ISSUED FOR ILLUSTRATIVE PURPOSES ONLY AND IS NOT TO BE USED FOR ANY PURPOSE, INCLUDING, BUT NOT LIMITED TO, AS A CONSTRUCTION DRAWING OR FOR A REQUEST FOR BID TO A THIRD PARTY. THIS DRAWING IS PROVIDED WITHOUT ANY WARRANTY EXPRESSED OR IMPLIED. ANY USE OF THIS DRAWING WILL BE AT THE RISK AND SOLE RESPONSIBILITY OF THE USER.

Calculation Of Emissions

Estimated Emission Calculation

Matthews Environmental Solutions
Crematory Incinerator Model IE43-PPI

Total Incenerator Burn Capacity 150 lb/hr of remains (type 4) and associated containers (type 0)
Flue gas flow rate = 1100 dscfm 12 Hours/Day X 6 Days/Week X 52 Weeks/Year
(100 % Excess Air) = 3744 Hours/Year

Total Emission Rate = Incinerator Burn Rate X Emission Factor

Sulfer Dioxide (SO_2)

$$\frac{150 \text{ lb/hr} \times 2.17 \text{ lb/ton} \times 1 \text{ ton}}{2000 \text{ lbs}} = 0.163 \text{ lb/hr} = 0.304668 \text{ TPY}$$

$$\frac{0.16275 \text{ lb/hr} \times 4.54E+05 \text{ mg/lb} \times 1 \text{ ppmv}}{1100 \text{ dscfm} \times 60 \text{ min/hr} \times 0.0283 \text{ m}^3/\text{f}^3 \times 2.61 \text{ mg/m}^3} = 15.16 \text{ ppmv}$$

Nitrogen Oxide (NOx - as Nitrogen Dioxide)

$$\frac{150 \text{ lb/hr} \times 3.56 \text{ lb/ton} \times 1 \text{ ton}}{2000 \text{ lbs}} = 0.267 \text{ lb/hr} = 0.499824 \text{ TPY}$$

$$\frac{0.267 \text{ lb/hr} \times 4.54E+05 \text{ mg/lb} \times 1 \text{ ppmv}}{1100 \text{ dscfm} \times 60 \text{ min/hr} \times 0.028 \text{ m}^3/\text{f}^3 \times 1.88 \text{ mg/m}^3} = 34.89 \text{ ppmv}$$

Hydrocarbons (TOC/VOC - methane)

$$\frac{150 \text{ lb/hr} \times 2.99E-01 \text{ lb/ton} \times 1 \text{ ton}}{2000 \text{ lbs}} = 0.022425 \text{ lb/hr} = 0.04198 \text{ TPY}$$

$$\frac{0.022425 \text{ lb/hr} \times 4.54E+05 \text{ mg/lb} \times 1 \text{ ppmv}}{1100 \text{ dscfm} \times 60 \text{ min/hr} \times 0.0283 \text{ m}^3/\text{f}^3 \times 0.65 \text{ mg/m}^3} = 8.39 \text{ ppmv}$$

Particulates (PM & PM_{10})

$$\frac{150 \text{ lb/hr} \times 4.67 \text{ lb/ton} \times 1 \text{ ton}}{2000 \text{ lbs}} = 0.35025 \text{ lb/hr} = 0.655668 \text{ TPY}$$

$$\frac{0.35025 \text{ lb/hr} \times 7.00E+03 \text{ gr/lb}}{1100 \text{ dscfm} \times 60 \text{ min/hr}} = 0.04 \text{ gr/dscf}$$

Carbon Monoxide (CO)

$$\frac{150 \text{ lb/hr} \times 2.95 \text{ lb/ton} \times 1 \text{ ton}}{2000 \text{ lbs}} = 0.22125 \text{ lb/hr} = 0.41418 \text{ TPY}$$

$$\frac{0.22125 \text{ lb/hr} \times 4.54E+05 \text{ mg/lb} \times 1 \text{ ppmv}}{1100 \text{ dscfm} \times 60 \text{ min/hr} \times 0.028 \text{ m}^3/\text{f}^3 \times 1.14 \text{ mg/m}^3} = 47.68 \text{ ppmv}$$

Notes:
1. Incinerator Emissions based on EPA emissions from Table 2.3-1 and 2.3-2 of AP-42 (5th Edition)
2. All conversion factors from AP-42 Appendix A.

CREMATOR MASS BALANCE

Matthews Environmental Solutions

PPI

THESE CALCULATIONS HAVE BEEN PREPARED TO EVALUATE THE COMBUSTION PROCESS IN THIS UNIT.

THE INCINERATOR INSTITUTE OF AMERICA HAS PUBLISHED THE FOLLOWING SPECIFICATIONS COVERING AVERAGE WASTES.

WASTE TYPE	TYPE 0	TYPE 4
BTU PER POUND	8500	1000
POUND ASH PER POUND WASTE	0.05	0.05
POUND MOISTURE PER POUND WASTE	0.1	0.85
POUND COMBUSTIBLES PER POUND WASTE	0.85	0.1
HOURLY CONSUMPTION OF WASTE (LBS)	10	140

1. MASS OF PRODUCTS OF COMBUSTION FROM CONTAINER

A. COMBUSTION AIR

$$\frac{8500\ \text{BTU/LB}}{100\ \text{BTU/CF OF AIR*}} \times 0.075\ \text{LB/CF OF AIR} = 6.38\ \text{LB/LB BURNED}$$

B. COMBUSTIBLES AND WATER VAPOR FROM CHART ABOVE = 0.95 LB/LB BURNED

C. TOTAL FLUE PRODUCT MASS PER LB BURNED = 7.33 LB/LB BURNED

2. MASS OF PRODUCTS OF COMBUSTION FROM BODY

A. COMBUSTION AIR

$$\frac{1000\ \text{BTU/LB}}{100\ \text{BTU/CF OF AIR*}} \times 0.075\ \text{LB/CF OF AIR} = 0.75\ \text{LB/LB BURNED}$$

B. COMBUSTIBLES AND WATER VAPOR FROM CHART ABOVE = 0.95 LB/LB BURNED

C. TOTAL FLUE PRODUCT MASS PER LB BURNED = 1.70 LB/LB BURNED

SPECIFICATIONS	
PRIMARY BURNER FUEL CONSUMPTION (MMBTU/HR)	1
SECONDARY BURNER FUEL CONSUMPTION (MMBTU/HR)	1.2
ADDITIONAL SECONDARY AIR SUPPLIED (CFM)	200
SEC. CHAMBER OPERATING TEMPERATURE (°F)	**1600**
SECONDARY CHAMBER VOLUME (CU. FT)	74
SEC. CHAMB. CROSS-SECTIONAL AREA (SQ. FT)	2.44
FLAME PORT AREA (SQ. FT)	2.95
MIXING BAFFLES AREA (SQ. FT)	1.36

*AIR AT STANDARD CONDITIONS

3. TOTAL FLUE PRODUCTS

A. MAXIMUM PRIMARY BURNER GAS USAGE

1000000 BTU/HR x 4.5E-05 LBS/BTU = 45 LBS/HR

B. COMBUSTION AIR FOR PRIMARY BURNER

$$\frac{1000000\ \text{BTU/HR}}{100\ \text{BTU/CF AIR}} \times \frac{1}{\text{Burner}} \times 0.075\ \text{LB/CF AIR} = 750\ \text{LBS/HR}$$

C. MAXIMUM SECONDARY BURNER GAS USAGE

1200000 BTU/HR x 4.5E-05 LBS/BTU = 54 LBS/HOUR

D. COMBUSTION AIR FOR SECONDARY BURNER

$$\frac{1200000 \text{ BTU/HR}}{100 \text{ BTU/CF AIR}} \times \frac{1}{\text{Burner}} \times 0.075 \text{ LB/CF AIR} = 900 \text{ LBS/HOUR}$$

E. PRODUCTS FROM TYPE 0 WASTE (CONTAINER)

7.33 LBS/LB BURNED x 10 LB/HR BURN RATE = 73 LBS/HOUR

F. PRODUCTS FROM TYPE 4 WASTE (TISSUE)

1.70 LBS/LB WASTE x 140 LB/HR BURN RATE = 238 LBS/HOUR

G. ADDITIONAL SECONDARY CHAMBER COMBUSTION AIR (THROAT AIR)

12000 CF/HR* x 0.075 LB/CF AIR = 900 LBS/HOUR

H. TOTAL FLUE PRODUCTS = 2960 LBS/HOUR

2. VELOCITY AND TIME CALCULATIONS

A. SCFM CALCULATION (PRODUCTS ASSUMED TO HAVE DENSITY CLOSE TO AIR)

$$2960 \text{ LBS/HR} \times \frac{13.35 \text{ STD. CU. FT/LB}}{60 \text{ MIN/HR}} = 659 \text{ SCFM}$$

B. TOTAL PRODUCTS ACFM @ 1600 °F

$$\frac{2060 \text{ °RANKINE}}{530 \text{ °RANKINE}} \times 658.7 \text{ CFM} = 2560 \text{ ACFM}$$

C. RETENTION TIME

$$\frac{74 \text{ CU. FT}}{2560 \text{ ACFM}} \times \frac{60 \text{ SECONDS}}{1 \text{ MINUTE}} = \mathbf{1.73 \text{ SECONDS}}$$

Source Test Report

Harmony Grove Cemetery
30 Grove Street,
Salem, Massachusetts

Source Tested: New Crematorium Retort
Test Date: August 30, 2023
Report Submittal Date: October 2, 2023

Project No. AST-2023-3149

Prepared By
Alliance Technical Group, LLC
Boston Office
1020 Turnpike Street, Suite 8
Canton, MA 02021

Regulatory Information

Permit No.	ePlace Authorization #: AQ02C-0000004 Approval No.: NE-21-020
Regulatory Citation	310 CMR 7.00
Regulatory Agency	Massachusetts Department of Environmental Protection (MassDEP) Northeast Regional Office

Source Information

Source Name	*Source ID*	*Target Parameters*
Crematory Retort	EU #2	NOx, CO, PM/CPM, VE

Contact Information

Test Location
Harmony Grove Cemetery
30 Grove Street
Salem, MA 01970
[redacted]
978-744-0554

Contact
[redacted]
Cemetery Administrator

Test Company
Alliance Technical Group, LLC
Boston Office
1020 Turnpike Street, Suite 8
Canton, MA 02021

Project Manager
[redacted]
(781) 799-0710

Field Team Leader
[redacted]
(781) 770-8835

QA/QC Manager
[redacted]
(812) 452-4785

Report Coordinator
[redacted]
(256) 260-3981

Analytical Laboratory
Alliance Technical Group, LLC
214 Central Circle SW
Decatur, AL 35603
[redacted]
(256) 351-0121 ext. 124

Alliance Technical Group, LLC (Alliance) has completed the source testing as described in this report. Results apply only to the source(s) tested and operating condition(s) for the specific test date(s) and time(s) identified within this report. All results are intended to be considered in their entirety, and Alliance is not responsible for use of less than the complete test report without written consent. This report shall not be reproduced in full or in part without written approval from the customer.

To the best of my knowledge and abilities, all information, facts, and test data are correct. Data presented in this report has been checked for completeness and is accurate, error-free, and legible. Onsite testing was conducted in accordance with approved internal Standard Operating Procedures. Any deviations or problems are detailed in the relevant sections in the test report.

This report is only considered valid once an authorized representative of Alliance has signed in the space provided below; any other version is considered draft. This document was prepared in portable document format (.pdf) and contains pages as identified in the bottom footer of this document.

[redacted]

Project Manager
Alliance Technical Group, LLC

10/11/23
Date

[redacted]

Field Team Leader
Alliance Technical Group, LLC

10/11/23
Date

1.0 Introduction

Alliance Technical Group, LLC (Alliance) was retained by Harmony Grove Cemetery (Harmony Grove) to conduct compliance testing at the Salem, Massachusetts (MA) facility. Portions of the facility are subject to provisions from 310 CMR 7.00. The facility operates under Massachusetts Department of Environmental Protection (MassDEP) Permit Approval No.: NE-21-020. Testing was conducted to determine the emission rates of nitrogen oxides (NOx), carbon monoxide (CO), and particulate matter (PM/CPM), and make visible emission (opacity) observations at the exhaust of one of three retorts.

1.1 Facility and Source Description

Harmony Grove installed three (3) new retorts on the grounds of its cemetery at 30 Grove Street, Salem, Massachusetts. The three (3) new retorts are Power-Pak I IE43-PPI natural gas fired retorts manufactured by Matthews Cremation Division, as replacements for the three Power Pack II model crematory retorts, manufactured by Industrial Equipment and Engineering Company, that were installed in 1991. The three (3) new crematory retorts are identical units, designated in this Approval as Emission Unit 1 (EU1), EU2, and EU3, and are proposed to operate concurrently. The new crematory retorts were installed sequentially to replace the three existing retorts within a one (1) year period.

All three (3) retorts were installed, commissioned, and deemed fully operational as of May 1, 2023. Each retort consists of a primary incineration chamber, a secondary (i.e., afterburner) chamber with integrated burners and air controls, and a refractory lined stack. The proposed retorts are designed for the cremation of human remains only. The proposed retorts have a rated maximum cremation rate of 150 pounds per hour (lb/hr) of Type 4 human remains. Prior to cremation, human remains are placed in a cremation casket (i.e., Type 0 waste) to facilitate more complete incineration.

Each retort will automatically control the incineration process by adjusting combustion air and fuel in the primary chamber. The primary chamber combustion byproduct is a highly combustible gas mixture that flows into the secondary chamber where more air (i.e., excess air) is admitted ensuring further oxidation of all material. The secondary chamber is sized to provide at least 1-second of flue product residence time at 1,600°F to ensure complete mixing and combustion.

Each of the primary chambers of the three retorts is equipped with an Eclipse ThermJet Model TJ0150 burner utilizing natural gas as its only fuel and with a heat input rating of 1,000,000 British thermal units (“Btu”) per hour. Each secondary combustion chamber is equipped with an Eclipse ThermJet Model TJ0150 burner using natural gas as its only fuel with a heat input rating of 1,200,000 Btu per hour.

In addition, Harmony replaced the three (3) existing retort exhaust stacks with a new stack for each emission unit. The stacks discharge three feet above the peak of the crematory building. Appendix A contains a photograph of the retort exhaust stacks. Test ports will be accessed using a man-lift.

Table 1-1: Emission Unit and Control Device Information

Emission Units	Description	Rated Capacity
Crematory Retorts EU1, EU2, EU3	Crematory Retort: Matthews Cremation Division Power-Pak I, IE43-PPI Primary Combustion Chamber Burner: Eclipse ThermJet Model TJ0150 Secondary Combustion Chamber Burner: Eclipse ThermJet Model TJ0150	Cremation Capacity 150 lb/hr/unit (incineration rate) 750 lb/unit (charge capacity) Primary Combustion Chamber Burner: 1.0 MMBtu/hr/unit Secondary Combustion Chamber Burner: 1.2 MMBtu/hr/unit

1.2 Project Team

Personnel involved in this project are identified in the following table.

Table 1-2: Project Team

Facility Personnel	[redacted]
Regulatory Personnel	MassDEP NERO
Alliance Personnel	[redacted]

1.3 Test Protocol & Notification

Testing was conducted in accordance with the test protocol submitted to MassDEP on July 31, 2023.

1.4 Test Program Notes

Testing was completed without any deviations.

2.0 Summary of Results

Alliance conducted compliance testing at the Harmony Grove facility in Salem, MA on August 31, 2023. Testing consisted of determining the emission rates of NOx, CO, and PM/CPM, and make opacity observations at the exhaust of one of three retorts.

Table 2-1 provides a summary of the emission testing results with comparisons to the applicable MassDEP permit limits. This table also provides a summary of the process operating and control system data collected during testing. Any difference between the summary results listed in the following table and the detailed results contained in appendices is due to rounding for presentation.

Table 2-1: Summary of Results

Run Number	Run 1	Run 2	Run 3	Average
Date	**08/31/23**	**08/31/23**	**08/31/23**	--
Stack Data				
Volumetric Flow Rate, acfm	2,258	2,332	2,440	2,343
Volumetric Flow Rate, dscfm	644.4	669.2	692.4	668.7
Stack Temperature, °F	1,111	1,146	1,169	1,142
Pressure, Inches Hg	29.88	29.94	29.94	29.92
Water Content, %	14.95	12.72	12.45	13.37
Oxygen Concentration, % dry	8.32	12.69	10.01	10.34
Particulate Matter Data				
Filterable PM Concentration, grain/dscf @ 7% O_2	0.0331	0.0350	0.0231	0.0304
Filterable PM Emission Rate, lb/hr	0.17	0.12	0.11	0.13
Condensable PM Concentration, grain/dscf @ 7% O_2	0.0021	0.0055	0.0016	0.0031
Condensable PM Emission Rate, lb/hr	0.01	0.02	0.01	0.01
Total PM Concentration, grain/dscf @ 7% O_2	0.035	0.041	0.025	0.033
Permit Limit, grain/dscf @ 7% O_2	--	--	--	**0.060**
Total PM Emission Rate, lb/hr	0.176	0.137	0.115	0.143
Permit Limit, lb/hr	--	--	--	**0.313**
Carbon Monoxide Data				
Concentration, ppmvd	10.06	3.47	5.19	6.24
Concentration, ppmvd @ 7 % O_2	11.12	5.87	6.63	7.87
Permit Limit, ppmvd @ 7 % O_2	--	--	--	**50**
Emission Rate, lb/hr	0.03	0.01	0.02	0.02
Permit Limit, lb/hr	--	--	--	**0.133**
Nitrogen Oxides Data				
Concentration, ppmvd	104.61	73.16	124.00	100.59
Concentration, ppmvd @ 7 % O_2	115.59	123.92	158.25	132.59
Permit Limit, ppmvd @ 7 % O_2	--	--	--	**100**
Emission Rate, lb/hr	0.48	0.35	0.62	0.48
Permit Limit, lb/hr	--	--	--	**0.436**
Visible Emissions Data				
Highest 6-minute Average, %	1.0	0.2	0.0	--
Permit Limit, %	--	--	--	**5**

3.0 Testing Methodology

The emission testing program was conducted in accordance with the test methods listed in Table 3-1. Method descriptions are provided below while quality assurance/quality control data is provided in Appendix D.

Table 3-1: Source Testing Methodology

Parameter	U.S. EPA Reference Test Methods	Notes/Remarks
Volumetric Flow Rate	1 & 2	Full Velocity Traverses
Oxygen/Carbon Dioxide	3A	Instrumental Analysis
Moisture Content	4	Gravimetric Analysis
Total Particulate Matter	5/202	Isokinetic Sampling
Nitrogen Oxides	7E	Instrumental Analysis
Carbon Monoxide	10	Instrumental Analysis
Visible Emission Evaluation	9	Certified Observer

3.1 U.S. EPA Reference Test Methods 1 & 2 – Volumetric Flow Rate

The sampling location and number of traverse (sampling) points were selected in accordance with U.S. EPA Reference Test Method 1. To determine the minimum number of traverse points, the upstream and downstream distances were equated into equivalent diameters and compared to Figure 1-1 (for isokinetic sampling) and/or Figure 1-2 (measuring velocity alone) in U.S. EPA Reference Test Method 1.

Full velocity traverses were conducted in accordance with U.S. EPA Reference Test Method 2 to determine the average stack gas velocity pressure, static pressure, and temperature. The velocity and static pressure measurement system consisted of a pitot tube and inclined manometer. The stack gas temperature was measured with a K-type thermocouple and pyrometer.

Stack gas velocity pressure and temperature readings were recorded during each test run. The data collected was utilized to calculate the volumetric flow rate in accordance with U.S. EPA Reference Test Method 2.

3.2 U.S. EPA Reference Test Method 3A – Oxygen and Carbon Dioxide

The oxygen (O_2) and carbon dioxide (CO_2) testing were conducted in accordance with U.S. EPA Reference Test Method 3A. Data was collected online and reported in one-minute averages. The sampling system consisted of a stainless-steel probe, heated Teflon sample line(s), gas conditioning system and the identified gas analyzer. The gas conditioning system was a non-contact condenser used to remove moisture from the stack gas. The quality control measures are described in Section 3.8.

3.3 U.S. EPA Reference Test Method 4 – Gas Moisture Content

The stack gas moisture content (BWS) was determined in accordance with U.S. EPA Reference Test Method 4. The gas conditioning train consisted of a series of chilled impingers. Prior to testing, each impinger was filled with a known quantity of water or silica gel. Each impinger was analyzed gravimetrically before and after each test run on the same balance to determine the amount of moisture condensed.

3.4 U.S. EPA Reference Test Methods 5 and 202 – Total Particulate Matter

The total particulate matter (filterable and condensable PM) testing was conducted in accordance with U.S. EPA Reference Test Methods 5 and 202. The complete sampling system consisted of a glass nozzle, glass-lined probe, pre-weighed quartz filter, coil condenser, un-weighed Teflon filter, gas conditioning train, pump, and calibrated dry gas meter. The gas conditioning train consisted of a coiled condenser and four (4) chilled impingers. The first, and second impingers were initially empty, the third contained 100 mL of de-ionized water and the last impinger contained 200-300 grams of silica gel. The un-weighed 90 mm Teflon filter was placed between the second and third impingers. The probe liner heating system was maintained at a temperature of 248 ±25°F, and the impinger temperature was maintained at 68°F or less throughout testing. The temperature of the Teflon filter was maintained greater than 65°F but less than or equal to 85°F.

Following the completion of each test run, the sampling train was leak checked at a vacuum pressure greater than or equal to the highest vacuum pressure observed during the run. The nitrogen purge was omitted due to minimal condensate collected in the dry impingers. After the leak check the impinger contents were measured for moisture gain.

The pre-weighed quartz filter was carefully removed and placed in container 1. The probe, nozzle and front half of the filter holder were rinsed three (3) times with acetone to remove any adhering particulate matter and these rinses were recovered in container 2. All containers were sealed, labeled and liquid levels marked for transport to the identified laboratory for filterable particulate matter analysis.

The contents of impingers 1 and 2 were recovered in container CPM Cont. #1. The back half of the filterable PM filter holder, the coil condenser, impingers 1 and 2 and all connecting glassware were rinsed with DIUF water and then rinsed with acetone, followed by hexane. The water rinses were added to container CPM Cont. #1 while the solvent rinses were recovered in container CPM Cont. #2. The Teflon filter was removed from the filter holder and placed in container CPM Cont. #3. The front half of the condensable PM filter holder was rinsed with DIUF water and then with acetone, followed by hexane. The water rinse was added to container CPM Cont. #1 while the solvent rinses were added to container CPM Cont. #2. All containers were sealed, labeled and liquid levels marked for transport to the identified laboratory for condensable particulate matter analysis.

3.5 U.S. EPA Reference Test Method 7E – Nitrogen Oxides

The nitrogen oxides (NOx) testing was conducted in accordance with U.S. EPA Reference Test Method 7E. Data was collected online and reported in one-minute averages. The sampling system consisted of a stainless-steel probe, heated Teflon sample line(s), gas conditioning system and the identified gas analyzer. The gas conditioning system was a non-contact condenser used to remove moisture from the stack gas. The quality control measures are described in Section 3.8.

3.6 U.S. EPA Reference Test Method 9 – Visible Emissions Evaluations

The stack gas opacity was determined in accordance with U.S. EPA Reference Test 9. Visible emission evaluations were conducted by a certified visible emissions evaluator. Opacity readings were recorded in 15-second intervals during each of three (3) 60-minute evaluations.

3.7 U.S. EPA Reference Test Method 10 – Carbon Monoxide

The carbon monoxide (CO) testing was conducted in accordance with U.S. EPA Reference Test Method 10. Data was collected online and reported in one-minute averages. The sampling system consisted of a stainless-steel probe,

heated Teflon sample line(s), gas conditioning system, and the identified gas analyzer. The gas conditioning system was a non-contact condenser used to remove moisture from the gas. The quality control measures are described in Section 3.8.

3.8 Quality Assurance/Quality Control – U.S. EPA Reference Test Methods 3A, 7E, and 10

EPA Protocol 1 Calibration Gases

Cylinder calibration gases used met EPA Protocol 1 (+/- 2%) standards. Copies of all calibration gas certificates can be found in the Quality Assurance/Quality Control Appendix.

Direct Calibration & Calibration Error Test

Low Level gas was introduced directly to the analyzer. After adjusting the analyzer to the Low-Level gas concentration and once the analyzer reading was stable, the analyzer value was recorded. This process was repeated for the High-Level gas. For the Calibration Error Test, Low, Mid, and High Level calibration gases were sequentially introduced directly to the analyzer. All values were within 2.0 percent of the Calibration Span or 0.5 ppmv/% absolute difference.

System Bias and Response Time

Mid Level gas (whichever was closer to the stack gas concentration) was introduced at the probe and the time required for the analyzer reading to reach 95 percent or 0.5 ppmv/% (whichever was less restrictive) of the gas concentration was recorded. The analyzer reading was observed until it reached a stable value, and this value was recorded. Next, Low Level gas was introduced at the probe and the time required for the analyzer reading to decrease to a value within 5.0 percent or 0.5 ppmv/% (whichever was less restrictive) was recorded. If the Low-Level gas was zero gas, the response was 0.5 ppmv/% or 5.0 percent of the upscale gas concentration (whichever was less restrictive). The analyzer reading was observed until it reached a stable value and this value was recorded. The measurement system response time and initial system bias were determined from these data. The System Bias was within 5.0 percent of the Calibration Span or 0.5 ppmv/% absolute difference.

Post Test System Bias Checks

Mid Level gas (whichever was closer to the stack gas concentration) was introduced at the probe. After the analyzer response was stable, the value was recorded. Next, Low Level gas was introduced at the probe, and the analyzer value recorded once it reached a stable response. The System Bias was within 5.0 percent of the Calibration Span or 0.5 ppmv/% absolute difference or the data was invalidated, and the Calibration Error Test and System Bias were repeated.

Post Test Drift Checks

Drift between pre- and post-run System Bias was within 3 percent of the Calibration Span or 0.5 ppmv/% absolute difference. If the drift exceeded 3 percent or 0.5 ppmv/%, the Calibration Error Test and System Bias were repeated.

Stratification Check

To determine the number of sampling points, a gas stratification check was conducted prior to initiating testing. The pollutant concentrations were measured at three points (16.7, 50.0 and 83.3 percent of the measurement line). Each traverse point was sampled for a minimum of twice the system response time.

If the pollutant concentration at each traverse point did not differ more than 5 percent or 0.5 ppmv/0.3% (whichever was less restrictive) of the average pollutant concentration, then single point sampling was conducted during the test

runs. If the pollutant concentration did not meet these specifications but differed less than 10 percent or 1.0 ppmv/0.5% from the average concentration, then three (3) point sampling was conducted (stacks less than 7.8 feet in diameter - 16.7, 50.0 and 83.3 percent of the measurement line; stacks greater than 7.8 feet in diameter – 0.4, 1.0, and 2.0 meters from the stack wall). If the pollutant concentration differed by more than 10 percent or 1.0 ppmv/0.5% from the average concentration, then sampling was conducted at a minimum of twelve (12) traverse points. Copies of stratification check data can be found in the Quality Assurance/Quality Control Appendix.

NO_x Converter Check

An NO_2 – NO converter check was performed on the analyzer at the completion of testing. An approximately 51 ppm nitrogen dioxide cylinder gas was introduced directly to the NOx analyzer and the instrument response was recorded in an electronic data sheet. The instrument response was within +/- 10 percent of the cylinder concentration.

Data Collection

A Data Acquisition System with battery backup was used to record the instrument response in one (1) minute averages. The data was continuously stored as a *.CSV file in Excel format on the hard drive of a computer. At the completion of testing, the data was also saved to the Alliance server. All data was reviewed by the Field Team Leader before leaving the facility. Once arriving at Alliance's office, all written and electronic data was relinquished to the report coordinator and then a final review was performed by the Project Manager.

Location:	Harmony Grove Cemetery - Salem, MA
Source:	EU#2
Project No.:	AST-2023-3149
Run No. /Method	Run 1 / Method 3A

O_2 - Outlet Concentration (C_{O_2}), % dry

$$C_{O_2} = (C_{obs} - C_0) \times \left(\frac{C_{MA}}{(C_M - C_0)} \right)$$

where,

C_{obs}	8.28	= average analyzer value during test, % dry
C_o	0.15	= average of pretest & posttest zero responses, % dry
C_{MA}	9.98	= actual concentration of calibration gas, % dry
C_M	9.90	= average of pretest & posttest calibration responses, % dry
C_{O_2}	8.32	= O_2 Concentration, % dry

Location:	Harmony Grove Cemetery - Salem, MA
Source:	EU#2
Project No.:	AST-2023-3149
Run No. /Method	Run 1 / Method 3A

CO_2 - Outlet Concentration (C_{CO_2}), % dry

$$C_{CO_2} = (C_{obs} - C_0) \times \left(\frac{C_{MA}}{(C_M - C_0)} \right)$$

where,

C_{obs}	8.64	= average analyzer value during test, % dry
C_o	0.25	= average of pretest & posttest zero responses, % dry
C_{MA}	9.98	= actual concentration of calibration gas, % dry
C_M	9.95	= average of pretest & posttest calibration responses, % dry
C_{CO_2}	8.63	= CO_2 Concentration, % dry

Location:	Harmony Grove Cemetery - Salem, MA
Source:	EU#2
Project No.:	AST-2023-3149
Run No. /Method	Run 1 / Method 10

CO - Outlet Concentration (C_{CO}), ppmvd

$$C_{CO} = (C_{obs} - C_0) \times \left(\frac{C_{MA}}{(C_M - C_0)} \right)$$

where,

C_{obs}	10.26	= average analyzer value during test, ppmvd
C_o	0.35	= average of pretest & posttest zero responses, ppmvd
C_{MA}	95.51	= actual concentration of calibration gas, ppmvd
C_M	94.40	= average of pretest & posttest calibration responses, ppmvd
C_{CO}	10.06	= CO Concentration, ppmvd

CO - Outlet Concentration (C_{COc7}), ppmvd @ 7% O_2

$$C_{COc7} = C_{CO} \times \left(\frac{20.9 - 7}{20.9 - O_2} \right)$$

where,

C_{CO}	10.06	= CO - Outlet Concentration, ppmvd
C_{O_2}	8.32	= oxygen concentration, %
C_{COc7}	11.12	= ppmvd @7% O_2

CO - Outlet Emission Rate (ER_{CO}), lb/hr

$$ER_{CO} = \frac{C_{CO} \times MW \times Qs \times 60 \frac{min}{hr} \times 28.32 \frac{L}{ft^3}}{24.04 \frac{L}{g-mole} \times 1.0E06 \times 453.592 \frac{g}{lb}}$$

where,

C_{CO}	10.06	= CO - Outlet Concentration, ppmvd
MW	28.01	= CO molecular weight, g/g-mole
Qs	644	= stack gas volumetric flow rate at standard conditions, dscfm
ER_{CO}	0.03	= lb/hr

Location:	Harmony Grove Cemetery - Salem, MA
Source:	EU#2
Project No.:	AST-2023-3149
Run No. /Method	Run 1 / Method 7E

NOx - Outlet Concentration (C_{NOx}), ppmvd

$$C_{NOx} = (C_{obs} - C_0) \times \left(\frac{C_{MA}}{(C_M - C_0)}\right)$$

where,

C_{obs}	103.47	= average analyzer value during test, ppmvd
C_o	0.25	= average of pretest & posttest zero responses, ppmvd
C_{MA}	96.43	= actual concentration of calibration gas, ppmvd
C_M	95.40	= average of pretest & posttest calibration responses, ppmvd
C_{NOx}	104.61	= NOx Concentration, ppmvd

NOx - Outlet Concentration (C_{NOxc7}), ppmvd @ 7% O_2

$$C_{NOxc7} = C_{NOx} \times \left(\frac{20.9 - 7}{20.9 - O_2}\right)$$

where,

C_{NOx}	104.61	= NOx - Outlet Concentration, ppmvd
C_{O_2}	8.32	= oxygen concentration, %
C_{NOxc7}	115.59	= ppmvd @7% O_2

NOx - Outlet Emission Rate (ER_{NOx}), lb/hr

$$ER_{NOx} = \frac{C_{NOx} \times MW \times Qs \times 60 \frac{min}{hr} \times 28.32 \frac{L}{ft^3}}{24.04 \frac{L}{g-mole} \times 1.0E06 \times 453.592 \frac{g}{lb}}$$

where,

C_{NOx}	104.61	= NOx - Outlet Concentration, ppmvd
MW	46.0055	= NOx molecular weight, g/g-mole
Qs	644	= stack gas volumetric flow rate at standard conditions, dscfm
ER_{NOx}	0.48	= lb/hr

Location: Harmony Grove Cemetery - Salem, MA
Source: EU #2
Project No.: AST-2023-3149
Run No.: 1
Parameter: PM/CPM

Meter Pressure (Pm), in. Hg

$$Pm = Pb + \frac{\Delta H}{136}$$

where,

Pb	29.88	= barometric pressure, in. Hg
ΔH	0.643	= pressure differential of orifice, in H_2O
Pm	29.93	= in. Hg

Absolute Stack Gas Pressure (Ps), in. Hg

$$Ps = Pb + \frac{Pg}{13\,6}$$

where,

Pb	29.88	= barometric pressure, in. Hg
Pg	0.02	= static pressure, in. H_2O
Ps	29.88	= in. Hg

Standard Meter Volume (Vmstd), dscf

$$Vmstd = \frac{17.636 \times Y \times Vm \times Pm}{Tm}$$

where,

Y	0.9954	= meter correction factor
Vm	30.126	= meter volume, cf
Pm	29.93	= absolute meter pressure, in. Hg
Tm	527.2	= absolute meter temperature, ^oR
Vmstd	30.023	= dscf

Standard Wet Volume (Vwstd), scf

$$Vwstd = 0.04716 \times Vlc$$

where,

Vlc	111.9	= volume of H_2O collected, ml
Vwstd	5.277	= scf

Moisture Fraction (BWS), dimensionless (measured)

$$BWS = \frac{Vwstd}{(Vwstd + Vmstd)}$$

where,

Vwstd	5.277	= standard wet volume, scf
Vmstd	30.023	= standard meter volume, dscf
BWS	0.149	= dimensionless

Molecular Weight (DRY) (Md), lb/lb-mole

$$Md = (0.44 \times \%\,CO_2) + (0.32 \times \%\,O2) + (0.28\,(100 - \%\,CO_2 - \%\,O2))$$

where,

CO_2	8.6	= carbon dioxide concentration, %
O_2	8.3	= oxygen concentration, %
Md	29.71	= lb/lb mol

Molecular Weight (WET) (Ms), lb/lb-mole

$$Ms = Md\ (1 - BWS) + 18.015\ (BWS)$$

where,

Md	29.71	= molecular weight (DRY), lb/lb mol
BWS	0.149	= moisture fraction, dimensionless
Ms	27.96	= lb/lb mol

Location: Harmony Grove Cemetery - Salem, MA
Source: EU #2
Project No.: AST-2023-3149
Run No.: 1
Parameter: PM/CPM

Average Velocity (Vs), ft/sec

$$Vs = 85.49 \times Cp \times (\Delta P^{1/2})\,avg \times \sqrt{\frac{Ts}{Ps \times Ms}}$$

where,

Cp	0.840	= pitot tube coefficient
$\Delta P^{1/2}$	0.197	= velocity head of stack gas, $(in.\ H_2O)^{1/2}$
Ts	1570.3	= absolute stack temperature, °R
Ps	29.88	= absolute stack gas pressure, in. Hg
Ms	27.96	= molecular weight of stack gas, lb/lb mol
Vs	19.4	= ft/sec

Average Stack Gas Flow at Stack Conditions (Qa), acfm

$$Qa = 60 \times Vs \times As$$

where,

Vs	19.4	= stack gas velocity, ft/sec
As	1.94	= cross-sectional area of stack, ft^2
Qa	2,258	= acfm

Average Stack Gas Flow at Standard Conditions (Qs), dscfm

$$Qs = 17.636 \times Qa \times (1 - BWS) \times \frac{Ps}{Ts}$$

where,

Qa	2,258	= average stack gas flow at stack conditions, acfm
BWS	0.149	= moisture fraction, dimensionless
Ps	29.88	= absolute stack gas pressure, in. Hg
Ts	1570.3	= absolute stack temperature, °R
Qs	644	= dscfm

Dry Gas Meter Calibration Check (Yqa), dimensionless

$$Yqa = \frac{Y - \left(\frac{\Theta}{Vm}\sqrt{\frac{0.0319 \times Tm \times 29}{\Delta H@ \times \left(Pb + \frac{\Delta\,Havg.}{13.6}\right) \times Md}}\sqrt{\Delta H}\,avg.\right)}{Y} \times 100$$

where,

Y	0.9954	= meter correction factor, dimensionless
Θ	60	= run time, min.
Vm	30.126	= total meter volume, dcf
Tm	527.2	= absolute meter temperature, °R
ΔH@	1.559	= orifice meter calibration coefficient, in. H_2O
Pb	29.88	= barometric pressure, in. Hg
ΔH avg	0.643	= average pressure differential of orifice, in H_2O
Md	29.71	= molecular weight (DRY), lb/lb mol
$(\Delta H)^{1/2}$	0.801	= average squareroot pressure differential of orifice, $(in.\ H2O)^{1/2}$
Yqa	5.0	= percent

Location:	**Harmony Grove Cemetery - Salem, MA**
Source:	**EU #2**
Project No.:	**AST-2023-3149**
Run No.:	**1**
Parameter:	**PM/CPM**

Volume of Nozzle (Vn), ft^3

$$\mathrm{Vn} = \frac{Ts}{Ps}\left(0.002669 \times Vlc + \frac{\mathrm{Vm} \times Pm \times Y}{Tm}\right)$$

where,

Ts	1570.3	= absolute stack temperature, °R
Ps	29.88	= absolute stack gas pressure, in. Hg
Vlc	111.9	= volume of H_2O collected, ml
Vm	30.126	= meter volume, cf
Pm	29.93	= absolute meter pressure, in. Hg
Y	0.995	= meter correction factor, unitless
Tm	527.2	= absolute meter temperature, °R
Vn	105.156	= volume of nozzle, ft^3

Isokinetic Sampling Rate (I), %

$$\mathrm{I} = \left(\frac{\mathrm{Vn}}{\theta \times 60 \times \mathrm{An} \times Vs}\right) \times 100$$

where,

Vn	105.156	= nozzle volume, ft3
θ	60.0	= run time, minutes
An	0.00140	= area of nozzle, ft^2
Vs	19.4	= average velocity, ft/sec
I	108.0	= %

Filterable PM Concentration (C_s), grain/dscf

$$\mathrm{C}_s = \frac{\mathrm{M_n} \times 0.0154}{\mathrm{Vmstd}}$$

where,

Mn	58.2	= filterable PM mass, mg
Vmstd	30.023	= standard meter volume, dscf
C_s	0.0299	= grain/dscf

Filterable PM Concentration (corrected) (C_{SC-7}), grain/dscf @ 7% O_2

$$C_{sc-7} = \frac{M_n \times 0.0154}{Vmstd} \times \frac{20.9 - 7}{20.9 - O_2}$$

where,

Mn	58.2	= filterable PM mass, mg
Vmstd	30.023	= standard meter volume, dscf
O_2	8.3	= oxygen concentration, %
C_{SC-7}	0.0331	= grain/dscf @ 7% O_2

Location: Harmony Grove Cemetery - Salem, MA
Source: EU #2
Project No.: AST-2023-3149
Run No.: 1
Parameter: PM/CPM

Filterable PM Emission Rate (PMR), lb/hr

$$PMR = \frac{C_s \times Qs \times 60}{7.0E+03}$$

where,

C_s	0.0299	= filterable PM concentration, grain/dscf
Qs	644	= average stack gas flow at standard conditions, dscfm
PMR	0.17	= lb/hr

Condensable PM Concentration (C_{CPM}), grain/dscf

$$C_{CPM} = \frac{M_{CPM} \times 0.0154}{Vmstd}$$

where,

M_{CPM}	3.7	= condensable PM mass, mg
Vmstd	30.023	= standard meter volume, dscf
C_{CPM}	0.0019	= grain/dscf

Condensable PM Concentration (corrected) (C_{CPMc-7}), grain/dscf @ 7% O_2

$$C_{CPMc-7} = \frac{M_{CPM} \times 0.0154}{Vmstd} \times \frac{20.9\% - 7}{20.9\% - O_2}$$

where,

M_{CPM}	3.7	= condensable PM mass, mg
Vmstd	30.023	= standard meter volume, dscf
O_2	8.3	= oxygen concentration, %
C_{CPMc-7}	0.0021	= grain/dscf @ 7% O2

Condensable PM Emission Rate (ER_{CPM}), lb/hr

$$ER_{CPM} = \frac{C_{CPM} \times Qs \times 60\frac{min}{hr}}{7.0E+03}$$

where,

C_{CPM}	0.0019	= condensable PM concentration, grain/dscf
Qs	644	= average stack gas flow at standard conditions, dscfm
ER_{CPM}	0.01	= lb/hr

Total PM Concentration (C_{TPM}), grain/dscf

$$C_{TPM} = C_S + C_{CPM}$$

where,

C_s	0.030	= filterable PM concentration, grain/dscf
C_{CPM}	0.002	= condensable PM concentration, grain/dscf
C_{TPM}	0.032	= grain/dscf

Total PM Emission Rate (ER_{TPM}), lb/hr

$$ER_{TPM} = PMR + ER_{CPM}$$

where,

PMR	0.17	= filterable PM emission rate, lb/hr
ER_{CPM}	0.01	= condensable PM emission rate, lb/hr
ER_{TPM}	0.18	= lb/hr

Alliance TECHNICAL GROUP

Location Harmony Grove Cemetery - Salem, MA
Source EU#2
Project No. AST-2023-3149

Run Number		Run 1	Run 2	Run 3	Average
Date		8/31/23	8/31/23	8/31/23	--
Start Time		8:12	11:13	2:44	--
Stop Time		9:12	12:14	3:44	--
Input Data - Outlet					
Moisture Fraction, dimensionless	BWS	0.1495	0.1272	0.1245	0.1337
Volumetric Flow Rate (M1-4), dscfm	Qs	644.4	669.2	692.4	668.7
Calculated Data - Outlet					
O_2 Concentration, % dry	C_{O_2}	8.32	12.69	10.01	10.34
CO_2 Concentration, % dry	C_{CO_2}	8.63	5.22	7.74	7.19
CO Concentration, ppmvd	C_{CO}	10.06	3.47	5.19	6.24
CO Concentration, ppmvd @ 7 % O_2	C_{COc7}	11.12	5.87	6.63	7.87
CO Emission Rate, lb/hr	ER_{CO}	0.03	0.01	0.02	0.02
NOx Concentration, ppmvd	C_{NOx}	104.61	73.16	124.00	100.59
NOx Concentration, ppmvd @ 7 % O_2	C_{NOxc7}	115.59	123.92	158.25	132.59
NOx Emission Rate, lb/hr	ER_{NOx}	0.48	0.35	0.62	0.48

Visible Emissions Evaluations

Project No.	AST-2023-3149	
Facility Name	Harmony Grove Cemetery	
Facility Location	Salem, MA	
Date	8/31/23	
Observation No.	1	
Source of Emissions	EU#	
Stack Height	22 ft	
Distance from Source	145 ft	
Direction from Source	NNW	
	Start	*End*
Time	8:12	9:12
Wind Direction (From)	NW	NW
Wind Speed	13 mph	12 mph
Ambient Temperature	62 °F	64 °F
Sky Conditions	Clear	Clear
Color of Background	Tree.	Tree.
Plume Color	N/A	N/A
Steam Plume? (y/n)	N	N
Attached to Stack? (y/n)	N/A	N/A

Draw the symbols in the diagram below.

Legend:

Sun: ✸ Wind: ⟹ North Direction: ⟹

plume and stack

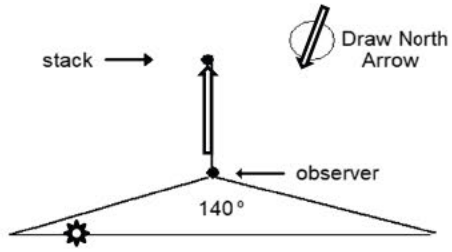

The highest six (6) minute rolling average was	1.0
Rolling Average > 20%	0
Rolling Average > 40%	0

Observations

min	0	15	30	45	min	0	15	30	45
0	0	0	0	0	30	0	0	0	0
1	0	0	0	0	31	0	0	0	0
2	0	0	0	0	32	0	0	0	0
3	0	0	0	0	33	0	0	0	0
4	0	0	0	0	34	0	0	0	0
5	0	0	0	0	35	0	0	0	0
6	0	0	0	0	36	0	0	0	0
7	0	0	0	0	37	0	0	0	0
8	0	0	0	0	38	0	0	0	0
9	0	0	0	0	39	0	0	0	0
10	0	0	0	0	40	0	0	5	5
11	0	0	0	0	41	5	5	5	0
12	0	0	0	0	42	0	0	0	0
13	0	0	0	0	43	0	0	0	0
14	0	0	0	0	44	0	0	0	0
15	0	0	0	0	45	0	0	0	0
16	0	0	0	0	46	0	0	0	0
17	0	0	0	0	47	0	0	0	0
18	0	0	0	0	48	0	0	0	0
19	0	0	0	0	49	0	0	0	0
20	0	0	0	0	50	0	0	0	0
21	0	0	0	0	51	0	0	0	0
22	0	0	0	0	52	0	0	0	0
23	0	0	0	0	53	0	0	0	0
24	0	0	0	0	54	0	0	0	0
25	0	0	0	0	55	0	0	0	0
26	0	0	0	0	56	0	0	0	0
27	0	0	0	0	57	0	0	0	0
28	0	0	0	0	58	0	0	0	0
29	0	0	0	0	59	0	0	0	0

Additional Comments

Limits: ≤ 5%,

Observer's Name Jim Rullo

Observer's Signature

Certification Agency Morrison

Certification Dates 4/11/23 *Lecture* 4/11/23 *Field*

Visible Emissions Evaluations

Project No.	AST-2023-3149	
Facility Name	Harmony Grove Cemetery	
Facility Location	Salem, MA	
Date	8/31/23	
Observation No.	2	
Source of Emissions	EU#	
Stack Height	23 ft	
Distance from Source	145 ft	
Direction from Source	NNW	
	Start	*End*
Time	11:12	12:12
Wind Direction (From)	N	N
Wind Speed	11 mph	10 mph
Ambient Temperature	68 °F	70 °F
Sky Conditions	Clear	Clear
Color of Background	Trees	Trees
Plume Color	N/A	N/A
Steam Plume? (y/n)	N	N
Attached to Stack? (y/n)	N/A	N/A

Draw the symbols in the diagram below.

Legend:

Sun: ✸ Wind: ⟹ North Direction: ⟹

plume and stack

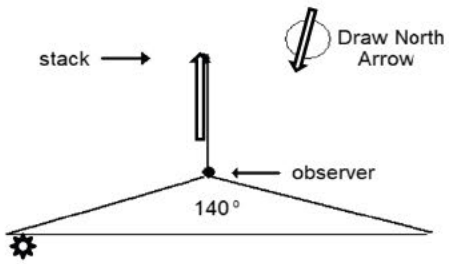

The highest six (6) minute rolling average was	0.2
Rolling Average > 20%	0
Rolling Average > 40%	0

Observations

min	0	15	30	45	min	0	15	30	45
0	0	0	0	0	30	0	0	0	0
1	0	0	0	0	31	0	0	0	0
2	0	0	0	0	32	0	0	0	5
3	0	0	0	0	33	0	0	0	0
4	0	0	0	0	34	0	0	0	0
5	0	0	0	0	35	0	0	0	0
6	0	0	0	0	36	0	0	0	0
7	0	0	0	0	37	0	0	0	0
8	0	0	0	0	38	0	0	0	0
9	0	0	0	0	39	0	0	0	0
10	0	0	0	0	40	0	0	0	0
11	0	0	0	0	41	0	0	0	0
12	0	0	0	0	42	0	0	0	0
13	0	0	0	0	43	0	0	0	0
14	0	0	0	0	44	0	0	0	0
15	0	0	0	0	45	0	0	0	0
16	0	0	0	0	46	0	0	0	0
17	0	0	0	0	47	0	0	0	0
18	0	0	0	0	48	0	0	0	0
19	0	0	0	0	49	0	0	0	0
20	0	0	0	0	50	0	0	0	0
21	0	0	0	0	51	0	0	0	0
22	0	0	0	0	52	0	0	0	0
23	0	0	0	0	53	0	0	0	0
24	0	0	0	0	54	0	0	0	0
25	0	0	0	0	55	0	0	0	0
26	0	0	0	0	56	0	0	0	0
27	0	0	0	0	57	0	0	0	0
28	0	0	0	0	58	0	0	0	0
29	0	0	0	0	59	0	0	0	0

Additional Comments

Limits: ≤ 5%,

Observer's Name Jim Rullo

Observer's Signature

Certification Agency Morrison

Certification Dates 4/11/23 *Lecture* 4/11/23 *Field*

Visible Emissions Evaluations

Project No.	AST-2023-3149	
Facility Name	Harmony Grove Cemetery	
Facility Location	Salem, MA	
Date	8/31/23	
Observation No.	3	
Source of Emissions	EU#	
Stack Height	23 ft	
Distance from Source	110 ft	
Direction from Source	NNE	
	Start	*End*
Time	14:44	15:44
Wind Direction (From)	N	NE
Wind Speed	10 mph	9 mph
Ambient Temperature	72 °F	70 °F
Sky Conditions	Clear	Clear
Color of Background	Tree	Tree
Plume Color	N/A	N/A
Steam Plume? (y/n)	n	n
Attached to Stack? (y/n)	N/A	N/A

Draw the symbols in the diagram below.
Legend:
Sun: Wind: North Direction:
plume and stack

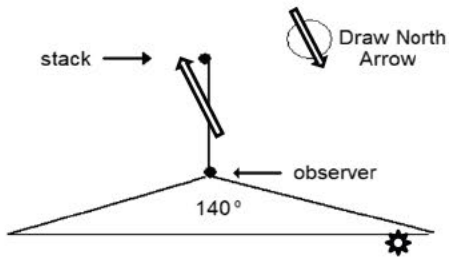

The highest six (6) minute rolling average was 0.0
Rolling Average > 20% 0
Rolling Average > 40% 0

Observations

min	0	15	30	45	min	0	15	30	45
0	0	0	0	0	30	0	0	0	0
1	0	0	0	0	31	0	0	0	0
2	0	0	0	0	32	0	0	0	0
3	0	0	0	0	33	0	0	0	0
4	0	0	0	0	34	0	0	0	0
5	0	0	0	0	35	0	0	0	0
6	0	0	0	0	36	0	0	0	0
7	0	0	0	0	37	0	0	0	0
8	0	0	0	0	38	0	0	0	0
9	0	0	0	0	39	0	0	0	0
10	0	0	0	0	40	0	0	0	0
11	0	0	0	0	41	0	0	0	0
12	0	0	0	0	42	0	0	0	0
13	0	0	0	0	43	0	0	0	0
14	0	0	0	0	44	0	0	0	0
15	0	0	0	0	45	0	0	0	0
16	0	0	0	0	46	0	0	0	0
17	0	0	0	0	47	0	0	0	0
18	0	0	0	0	48	0	0	0	0
19	0	0	0	0	49	0	0	0	0
20	0	0	0	0	50	0	0	0	0
21	0	0	0	0	51	0	0	0	0
22	0	0	0	0	52	0	0	0	0
23	0	0	0	0	53	0	0	0	0
24	0	0	0	0	54	0	0	0	0
25	0	0	0	0	55	0	0	0	0
26	0	0	0	0	56	0	0	0	0
27	0	0	0	0	57	0	0	0	0
28	0	0	0	0	58	0	0	0	0
29	0	0	0	0	59	0	0	0	0

Additional Comments

Limits: ≤ 5%,

Observer's Name Jim Rullo
Observer's Signature
Certification Agency Morrison
Certification Dates 4/11/23 *Lecture* 4/11/23 *Field*

BUILDING CODE INFORMATION
(INTERNATIONAL BUILDING CODE 2018)

1. BUILDING USE GROUP CLASSIFICATION: S-1 - STORAGE
2. CONSTRUCTION CLASSIFICATION: IIB (2B)
   - FOUNDATION: REINFORCED CONC. SPREAD FOOTINGS
   - FLOORS: SLAB ON GRADE
   - ROOF: STEEL FRAME W/ METAL PANEL
   - EXTERIOR WALLS: STEEL FRAME W/ METAL PANEL
   - FIRE SUPPRESSION SYSTEM: ORDINARY HAZARD AUTOMATIC WET FIRE SUPPRESSION SYSTEM PER NFPA 13.
3. BUILDING HEIGHT AREA: (TBL 503)
   ALLOWABLE HEIGHT: 3 STORY, 55'-0"
   ACTUAL BUILDING HEIGHT: 1 STORY, 14'-0"
   ALLOWABLE AREA: 83,328 SF
   ACTUAL BUILDING AREA: 18,000 SF
4. FIRE RESISTANCE RATING REQUIRED:
   - EXTERIOR NON-LOAD BEARING WALLS: 0 HR RATED
   - INTERIOR LOAD BEARING WALLS: 0 HR RATED
   - ROOF CONSTRUCTION: MTL ROOF PANEL OVER STEEL JOIST & BEAM SYSTEM - 0 HR RATED
5. EGRESS REQUIREMENTS:
   A. OCCUPANCY LOAD CALCULATIONS:
   PER STORAGE UNIT
   STORAGE: 3,000 SF ÷ 300 GSF/OCCUPANT = 10 OCCUPANTS
   B. EXIT CAPACITY: REQUIRED WIDTH (DOORS @ 5 INCHES/OCCUPANT)
   REQUIRED EGRESS WIDTH: 15 INCHES
   PROVIDED EGRESS WIDTH: 36 INCHES
   C. MINIMUM NUMBER OF EXITS REQUIRED:
   NUMBER REQUIRED: 1
   NUMBER PROVIDED: 1
6. MAXIMUM TRAVEL DISTANCE:
   MAXIMUM ALLOWABLE TRAVEL DISTANCE: 100 FEET
   MAXIMUM TRAVEL DISTANCE PROVIDED: 55 FEET

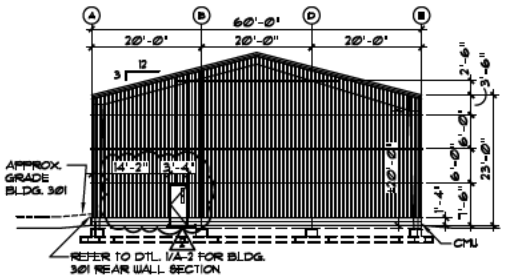

4 SIDE ELEVATION SIM. HAND SIM.
SCALE: 1/16" = 1'-0"

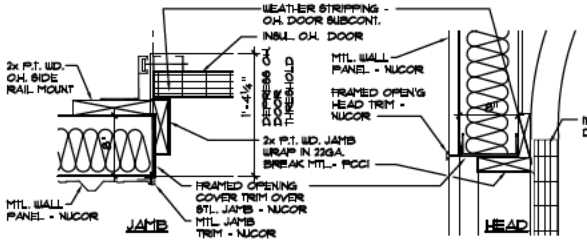

5 O.H. DOOR DTL.
SCALE: 1" = 1'-0"

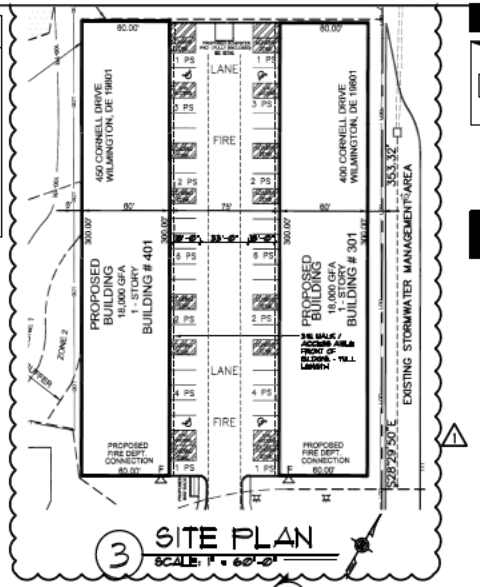

3 SITE PLAN
SCALE: 1" = 60'-0"

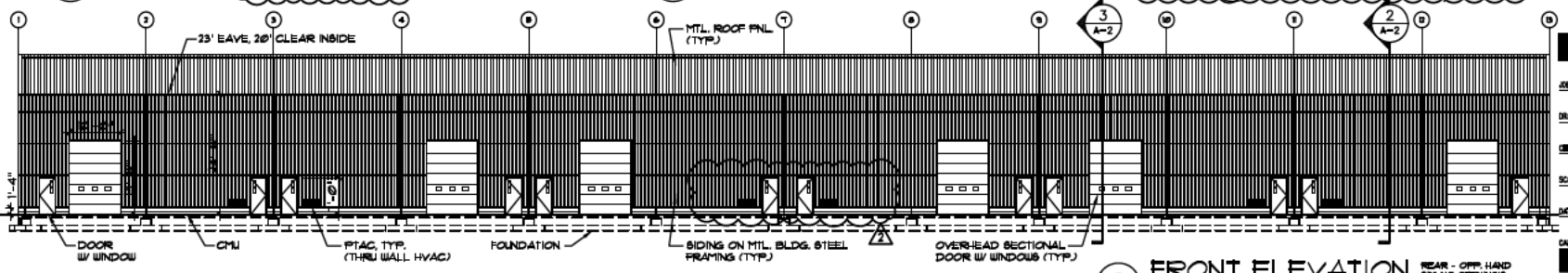

2 FRONT ELEVATION REAR - OPP. HAND SIM. NO OPENING'S
SCALE: 1/16" = 1'-0"

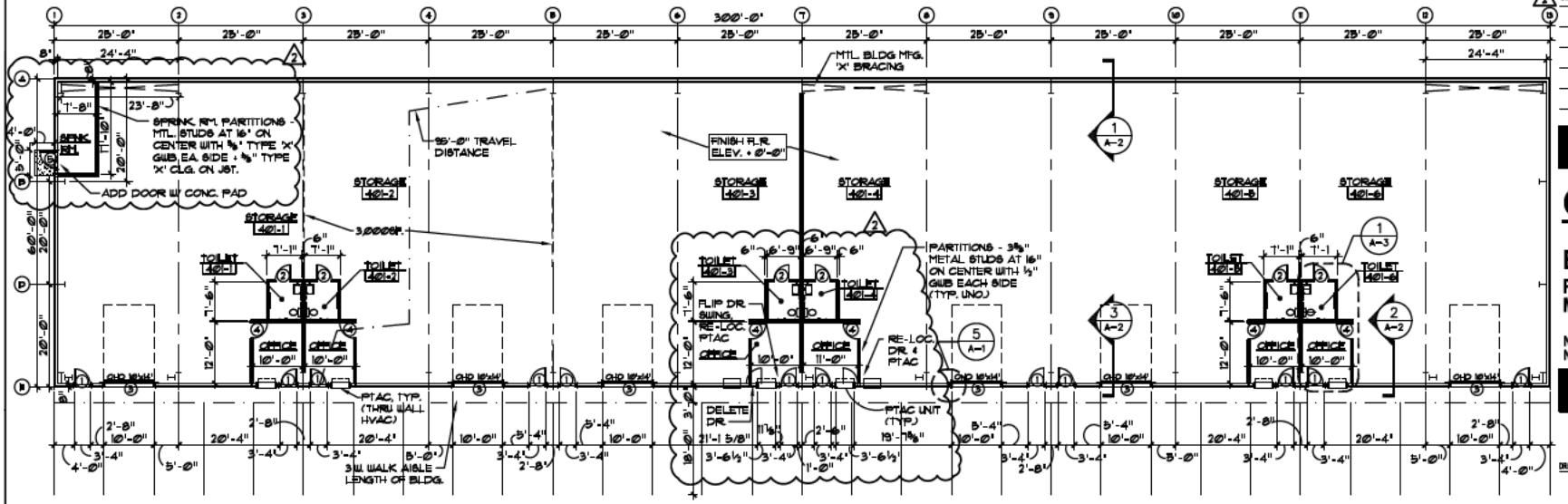

1 FLOOR PLAN
SCALE: 1/16" = 1'-0"

PETTINARO

234 North James Street
Newport, Delaware 19804
(302) 999-0708

William Netta Architects, LLC
15 Laurel Ridge Lane
Centerville, DE 19807

TEL: (302) 559-8886
FAX: (302) 999-1634

JOB NO.	550-B401
DRAWN BY:	JFM
CHECKED BY:	WTN
SCALE:	AS SHOWN
DATE:	10-25-2022

CAD:\PROPNELL\BLDG301&401\XLD Drawings\XLD CD\DR-ARCH\NTL BLDG\A1

	ISSUED FOR BID & CONSTRUCTION	10-25-2022
1	NCCO COMMENT - COORD. LOAD'G ZONE	11/21/2022
2	SPRINKLER RM. REVISION	01/09/2023

CORNELL PARK

BUILDING 301 & 401

PROPOSED ONE STORY MTL. STRUCTURE

NEW CASTLE HUNDRED
NEW CASTLE, DELAWARE

FLOOR PLAN, CODE DATA & ELEVATIONS

DRAWING TITLE:

A-1

DRAWING NUMBER:

MANUFACTURER'S SPECIFICATION SHEETS FOR THE ON-SITE STORAGE EQUIPMENT

amerikooler
TAKING COOL FURTHER

GENERATE REF # _____ DATE: _____

Sales Rep: _____ Dealer Name: _____

Contact Name: _____ Phone: _____

Email: _____

Project Name: _____

* I agree to be added to the Amerikooler newsletter mailing list and receive news and updates ☐

Shipping zip code _____

AMERIKOOLER QUOTE REQUEST

GENERAL INFO

1.	Walk-in Location	CLEAR	☐ Indoor	☐ Outdoor	☐ Outdoor Hurricane	☐ LARR (Seismic)
2.	Walk-in Level	CLEAR	☐ Ground Level (On Grade)	☐ 2nd Floor	☐ Basement	
3.	Walk-in Type	CLEAR	☐ Cooler	☐ Freezer	☐ Combo	
4.	Ambient Temperature	CLEAR	☐ 95°F	☐ 100°F	☐ 110°F	☐ Other _____
5.	Product Application					

DIMENSIONS

6.	Walk-in Size	_____ Length	_____ Width	_____ Height	
7.	Walk-in Height (Standard With No Floor)	CLEAR	☐ 7'-2 1/4"H	☐ 8'-2 1/4"H	
8.	Walk-in Height (Standard With Floor)	CLEAR	☐ 7'-7"H	☐ 8'-7"H	
9.	Custom Walk-in Height				
10.	Floor	CLEAR	☐ Yes	☐ No	☐ Reinforced floor support LBS/Sq FT
11.	Ramp	CLEAR	☐ Internal	☐ External	
12.	Door Size (clear opening)	CLEAR	☐ 36"x76"	☐ 30"x76"	☐ Other Size: _____
13.	Walk-In Finish Interior	CLEAR	☐ Acrylume Stucco	☐ S/S Smooth	☐ White Stucco ☐ Black Stucco
14.	Walk-In Finish Exterior	CLEAR	☐ Acrylume Stucco	☐ S/S Smooth	☐ White Stucco ☐ Black Stucco
15.	Door Finish Interior	CLEAR	☐ Acrylume Stucco	☐ S/S Smooth	☐ White Stucco ☐ Black Stucco
16.	Door Finish Exterior	CLEAR	☐ Acrylume Stucco	☐ S/S Smooth	☐ White Stucco ☐ Black Stucco






COMBINATION

17.	Compartment Size		Cooler L:	W:	H:	Freezer L:	W:	H:
18.	Cooler	CLEAR	☐ With Floor			☐ Without Floor		
19.	Compartments Locations (Provide Diagram on Pg. 2)							

REFRIGERATION

20.	Refrigeration Type	CLEAR	☐ Pre -Assembled Remote		☐ Pro 3 Self-Contained Top Mount	
21.	Refrigeration Location	CLEAR	☐ Indoor	☐ Outdoor		
22.	Cooler Temperature	CLEAR	☐ 30°F	☐ 35°F	☐ 45/55°F	
23.	Freezer Temperature	CLEAR	☐ 0°F	☐ -10°F	☐ -20°F	
24.	Voltage	CLEAR	☐ 115/1/60	☐ 208-230/1/60	☐ 208-230/3/60	☐ Other _____

ACCESSORIES

25.	Door Kick Plate	CLEAR	☐ 36" High	☐ 48" High	☐ Exterior	☐ Interior	☐ Both	
26.	Plastic Curtain	CLEAR	☐ Yes	☐ No	Note: *curtain required in freezers with door opening to ambient temperatures above 45°F*			
27.	3rd Hinge	CLEAR	☐ Yes	☐ No				
28.	Door Ajar Alarm	CLEAR	☐ Yes	☐ No				
29.	View Window	CLEAR	☐ 12"x12"	☐ 12"x24"				
30.	Light	CLEAR	☐ 48" LED	_____ Qty				
31.	Other(s):							

ANY SPECIALTY ACCESSORIES OR REQUIREMENTS NEED TO BE SPECIFIED IN THE SPECIAL NOTES SECTION

575 EAST 10TH AVENUE, HIALEAH, FL 33010 T 1.800.627.5665 F 305.884.8330 www.amerikooler.com

Please provide a diagram for your walk-in.

PROJECT NAME:	

Click To Upload Your Drawing

PROJECT ZIP CODE:	

Special Notes:

575 EAST 10TH AVENUE, HIALEAH, FL 33010 T 1.800.627.5665 F 305.884.8330 www.amerikooler.com

[Natural Minor]
[Stack Information]

Application Receipt Document

How does the process equipment vent:	Vents from Equipment defined in this Flow-Chain/Application (select the item)
If other, please specify	
Number of air contaminant emission points (Stack):	1
If available, upload a Building Profile Input Program for Plume Rise Model Enhancements (BPIPPRM) input file	

Emission Point (Stack) Name	ST-1
Which piece(s) of equipment will vent from this emission point (Stack)	AQM-3.11 Retort, processor and cooler
Emission point (Stack) height above grade:	20 Feet
Is the emission point (stack) circular?	Yes
Emission point (Stack) exit diameter:	1.67 Feet
Describe and provide emission point (stack) cross section dimensions	
Is an emission point (Stack) cap present?	no
Emission point (Stack) configuration:	Vertical
If Other, Please Specify	
Emission point (Stack) exit gas temperature	1100 °Fahrenheit
Do you know the emission point (stack) exit gas flow rate?	Yes
Emission point (Stack) exit gas flow rate	2300 Actual Cubic Feet per Minute
Emission point (stack) exit gas velocity	
Distance to nearest property line:	50 Feet
Is the emission point (stack) located near a man-made structure? (a structure is considered “near” if it is within five times the lesser dimension of its height or projected width.)	Yes
Describe nearest man-made obstruction:	Reason: The stack protrudes directly through the roof/structure of your commercial unit at 401 Cornell Drive. Under air dispersion modeling definitions, a stack extending through or situated within five times the height/width of a host building is considered "near" that man-made structure.
Height of nearest man-made obstruction:	26.5 Feet
Distance to nearest man-made obstruction:	0 Feet
Is the nearest man-made obstruction a building	Yes
Building Height (Please note that if your building is the nearest man-made obstruction, this may be the same answer as what you provided above.)	26.5 Feet
Longest horizontal dimension	200 Feet
Shortest horizontal dimension	90 Feet
Distance between center of building and the emission point (Stack)	30 Feet

Angle between the longest horizonal dimension and north. (clockwise from north, 0-179 degrees)	135
Angle between the emission point (Stack) and north at the center of the building. (clockwise from north, 0 – 360 degrees)	225
Are emission point (Stack) sampling ports provided?	Yes
Latitude	39.6974
Longitude	-75.5683

[Natural Minor]
[Monitoring Information]
Application Receipt Document

Will Emissions Data be Recorded by a Continuous Emission Monitoring System (CEMS)?	no
How Many Continuous Emission Monitoring Systems are in this flow chain?	
Please upload a copy of the Continuous Emission Monitoring System Manufacturer's Specification Sheets	

[Natural Minor]
[Overall Emission]

Application Receipt Document

Overall Process Emissions for Flow Chain

Pollutant Name	CAS Number	Maximum Uncontrolled Emission at Design Capacity	Unit	Maximum Controlled Emission at Design Capacity	Unit	Annual Potential to Emit (PTE) (Ton/Yr)	Requested Permitted Annual Emissions (Ton /Yr)
PM	N/A	0.3502	Lb /Hr	0.3502		0.66	0.7
PM_{10}		0.3502	Lb /Hr	0.3502		0.6556	0.7
$PM_{2.5}$		0.3502	Lb /Hr	0.3502		0.6556	0.7
SOx		0.163	Lb /Hr	0.163		0.3046	0.4
NOx		0.267	Lb /Hr	0.267		0.4998	0.5
CO		02212	Lb /Hr	0.2212		0.4141	0.5
VOCs		0.02242	Lb /Hr	0.2242		0.04198	0.5
HAPs			Lb /Hr				0
CO_2			Lb /Hr				0
CO_2e			Lb /Hr				0
Please upload the basis of determination or calculation for each emission rate			PPI Air permit application for (FOR REFERENCE ONLY) (1).pdf				

Minor New Source Review Information

Does the process have the potential to emit more than five tons per year of VOCs, NO_X, SO_2, SO_3, SOx, $PM_{2.5}$, and/or HAPs?	no

Is the Source New or Existing?	New
A Control Technology Analysis pursuant to Section 4 of Regulation No. 1125 must be conducted and attached to this application.	

Major New Source Review Information

Does the Process Have the Potential to Emit More Than the Significance Level for Any Pollutant?	This process WILL NOT emit more than the significant levels of pollutants indicated in this list

Additional Information

Is There Any Additional Information Pertinent to this Application?	no
Describe	
Optionally, attach files that will help with your description	

BASIS OF DETERMINANTION OR CALCULATION FOR EACH EMISSION RATE

DNREC – Division of Air Quality
Application to Construct, Operate, or Modify Stationary Sources

Administrative Information

One original and one copy of All Application Forms Should Be Mailed To:
Air Quality Management
100 West Water Street, Suite 6A
Dover, DE 19904

All Checks Should Be Made Payable To:
State of Delaware

Company and Site Information

1.	Company Name:			
2.	Company Mailing Address:			
	City:	State:	Zip Code:	
3.	Site Name:			
4.	Site Mailing Address: *(if different from above)*			
	City:	State:	Zip Code:	
5.	Physical Location of Site: *(if different from above)*			
	City:	State:	Zip Code:	
6.	Site Billing Address: *(if different from above)*			
	City:	State:	Zip Code:	
7.	Air Quality Management Facility ID Number:			
8.	Site NAICS Code): **812220** *(list all that apply*			
9.	Site SIC Code: **7261** *(list all that apply)*			
10.	Site Location Coordinates:	Latitude: ° ' " Longitude: ° ' "		
11.	Is the Facility New or Existing?	☐ NEW	☒ EXISTING	
If the Facility is an Existing Facility, Complete the Rest of Question 11. If Not, Proceed to Question 12.				
11.1.	Does the Facility Have Active Air Permits?	☐ YES	☒ NO	
12.	Is this Application For New Equipment or a Modification to Existing Equipment? ☒ New Equipment ☐ Modification of Existing Equipment ☐ Other (Specify):			
If the application is for the modification of existing equipment, complete the rest of Question 12. If not, proceed to Question 13.				

Company and Site Information

12.1.	Does the Equipment Have an Active Air Permit? ☐ YES ☒ NO
If the equipment has an active air permit, complete the rest of Question 12. If not, proceed to Question 13.	
12.2.	Permit Number of Existing Equipment:
13.	Status of Equipment Being Applied For: ☒ Natural Minor Source ☐ Synthetic Minor Source ☐ Major Source ☐ Federally Enforceable Restrictions
14.	Facility Status: ☒ Natural Minor Facility ☐ Synthetic Minor Facility ☐ Major Facility
If the facility is a Major Source, complete the rest of Question 14. If not, proceed to Question 15.	
14.1.	Responsible Official Name:
14.2.	Responsible Official Title:

Contact Information

15.	Name of Owner or Facility Manager:
16.	Title of Owner or Facility Manager:
17.	Permit Contact Name:
18.	Permit Contact Title:
19.	Permit Contact Telephone Number:
20.	Permit Contact Fax Number:
21.	Permit Contact E-Mail Address:
22.	Billing Contact Name:
23.	Billing Contact Title:
24.	Billing Contact Telephone Number:
25.	Billing Contact Fax Number:
26.	Billing Contact E-Mail Address:

Proposed Construction and Operating Schedule

27.	When Will the Proposed Construction/Installation/Modification Occur: TBD
28.	Proposed Operating Schedule: **12** hours/day **6** days/week **52** weeks/year
28.1.	Is There Any Additional Information Regarding the Operating Schedule? ☐ YES ☒ NO
If YES, complete the rest of Question 28. If NO, proceed to Question 29.	

Proposed Construction and Operating Schedule

28.2. Describe the Additional Information:

Coastal Zone Information

29. Is the Facility Located in the Coastal Zone? ☐ YES ☐ NO

If the facility is located in the Coastal Zone complete the rest of Question 29. If not, proceed to Question 30.

29.1. Is a Coastal Zone Permit Required for Construction or Operation of the Source Being Applied for? ☐ YES ☐ NO

Attach a copy of the Coastal Zone Determination if it has not been previously submitted

If a Coastal Zone Permit is required complete the rest of Question 29. If not, proceed to Question 30.

29.2. Has a Coastal Zone Permit Been Issued? ☐ YES ☐ NO

Attach a copy of the Coastal Zone Permit if it has not been previously submitted

Local Zoning Information

30. Parcel Zoning:

Attach Proof of Local Zoning if it has not been previously submitted

Application Information

31. Is the Appropriate Application Fee Attached? ☐ YES ☐ NO

32. Is the Advertising Fee Attached? ☐ YES ☐ NO

For help determining your application and advertising fees see:
http://www.dnrec.state.de.us/DNREC2000/Library/Fees/DE%20Permit%20Fees.htm

Attach the appropriate fees. Note that your Application will not be considered complete if the appropriate fees are not included.

33. Is a Cover Letter Describing the Process Attached? ☐ YES ☐ NO

Attach a brief cover letter describing your Application.

If the Facility is a New Facility complete Question 34. If not, proceed to Question35.

34. Is a Copy of the Applicant Background Information Questionnaire on Record at the Department? ☐ YES ☐ NO

If NO, complete the rest of Question 34. If YES, process to Question 35.

34.1 Is a Copy of the Applicant Background Information Questionnaire Attached? ☐ YES ☐ NO

For a copy of the Applicant Background Information Questionnaire see
http://www.dnrec.delaware.gov/services/Documents/Chapter79Form.pdf

Attach a copy of the Applicant Background Information Questionnaire if applicable.

35. Check Which Application Forms are Attached:

Application Information

☒ AQM-1	☐ AQM-3.4	☐ AQM-3.9	☐ AQM-3.14	☐ AQM-4.4	☐ AQM-4.9	☐ AQM-6
☒ AQM-2	☐ AQM-3.5	☐ AQM-3.10	☐ AQM-3.15	☐ AQM-4.5	☐ AQM-4.10	
☐ AQM-3.1	☐ AQM-3.6	☒ AQM-3.11	☐ AQM-4.1	☐ AQM-4.6	☐ AQM-4.11	
☐ AQM-3.2	☐ AQM-3.7	☐ AQM-3.12	☐ AQM-4.2	☐ AQM-4.7	☐ AQM-4.12	
☐ AQM-3.3	☐ AQM-3.8	☐ AQM-3.13	☐ AQM-4.3	☐ AQM-4.8	☒ AQM-5	

36. Check Which Documents are Attached:

- ☐ Coastal Zone Determination
- ☐ Coastal Zone Permit
- ☐ Proof of Local Zoning
- ☐ Application Fee
- ☐ Advertising Fee
- ☐ Applicant Background Information Questionnaire
- ☐ Claim of Confidentiality
- ☐ Manufacturer Specification(s)
- ☐ Material Safety Data Sheets (MSDSs)
- ☐ Supporting Calculations
- ☐ Descriptive Cover Letter
- ☐ Other (Specify):

Confidentiality Information

37. Do You Consider Any of the Information Submitted With this Application Confidential? ☐ YES ☐ NO

For help on how to submit a confidentiality claim see
http://regulations.delaware.gov/register/december2011/final/15%20DE%20Reg%20864%2012-01-11.htm

If a Claim of Confidentiality is made it MUST meet the requirements of Section 6 of DNREC's Freedom of Information ("FOIA") Regulation at the time the Application is submitted.

Signature Block

I, the undersigned, hereby certify under penalty of law that I have personally examined and am familiar with the information submitted in this document and all of its attachments as to the truth, accuracy, and completeness of this information. I certify based on information and belief formed after reasonable inquiry, the statements and information in this document are true, accurate, and complete. By signing this form, I certify that I have not changed, altered, or deleted any portions of this application. I acknowledge that I cannot commence construction, alteration, modification or initiate operation until I receive written approval (i.e. permit, registration, or exemption letter) from the Department. I acknowledge that I may be required to perform testing of the equipment to receive construction or operation approval, and that if I do not receive approval to construct or operate that I may appeal the decision.

_____ _____
Owner or Operator Date

_____
Signature of Owner or Operator

One Original and One Copy of All Application Forms Should Be Mailed To:
Division of Air Quality
Blue Hen Corporate Center
655 S. Bay Road, Suite 5 N
Dover, Delaware 19901

All Checks Should Be Made Payable To:
State of Delaware

DNREC – Air Quality Management Section
Application to Construct, Operate, or Modify Stationary Sources

Process Flow Diagram

Sketch the Process Flow Diagram for the equipment or process being applied for. Include each emission unit and control device (even existing emission units that will not be modified by this application). You may identify each emission unit with a simple shape. Label each emission unit and control device with a unique identifier. Show the relationship between each emission unit and/or control device by drawing arrows between them to indicate the flow of air pollutants. List which application forms are included for each emission unit or control device below the shape representing each emission unit or control device . See http://www.delaware.gov/reg2/default.htm for example Process Flow Diagrams for common processes. If you already have a Process Flow Diagram for the equipment or process being applied for, you may attach it to the application instead of using this form.

SEE ATTACHED PROCESS FLOW DIAGRAM

Crematories Application

If you are using this form electronically, press F1 at any time for help

General Information	
1.	Facility Name:
2.	Equipment ID Number: **01**
3.	Manufacturer: **Matthews Environmental Solutions**
4.	Model: **Power Pak I (IE43-PPI)**
5.	Serial Number:
6.	Does the Crematory Have a Secondary Chamber? ☒ YES ☐ NO
7.	Source of Material to be Cremated: ☒ Human Remains ☐ Animal Remains
8.	Capacity: **150 pounds/hour**
9.	Maximum Amount Cremated Per Day: **1800 (est) pounds/day**
Attach the Manufacturer's Specification Sheet and Manufacturer Emissions Testing Data (if available) for the Crematory	

Combustion Chamber Information	
10.	Primary Combustion Chamber Length: **8 feet**
11.	Primary Combustion Chamber Cross-Sectional Area: **7.4 square feet**
12.	Primary Combustion Chamber Effective Grate Area: **26 square feet**
13.	Primary Combustion Chamber Effective Volume: **64 cubic feet**
14.	Primary Combustion Chamber Capacity: **150 pounds/hour**
15.	Primary Combustion Chamber Percent Excess Air: **100** %
15.1.	Percent of Excess Air Applied as Overfire Air: **100** %
15.2.	Percent of Excess Air Applied as Underfire Air: **0** %
16.	Is the Primary Chamber Equipped With a Temperature Monitoring Device? ☐ YES ☒ NO
If YES, complete the rest of Question 16. If NO, proceed to Question 17.	
16.1.	Temperature Monitoring Device Type: ☐ Indicating Pyrometer ☐ Thermocouple ☐ Other (Specify):
17.	Primary Combustion Chamber Design Operating Range: **0 °F** to **2100 °F**
18.	Secondary Combustion Chamber Length: **20 feet**
19.	Secondary Combustion Chamber Cross-Sectional Area: **2.5 square feet**
20.	Secondary Combustion Chamber Effective Volume: **74 cubic feet**
21.	Secondary Combustion Chamber Retention Time: **> 1 seconds**

Combustion Chamber Information

22. Is the Secondary Chamber Equipped With a Temperature Monitoring Device? ☒ YES ☐ NO

If YES, complete the rest of Question 22. If NO, proceed to Question 23.

22.1. Temperature Monitoring Device Type:
☐ Indicating Pyrometer
☒ Thermocouple
☐ Other (Specify):

23. Secondary Combustion Chamber Design Operating Range: **1200 °F** to **1800 °F**

24. Total Heat Release: **10100** BTU/hr/ft^3

Burner Information

25. Primary Combustion Chamber Burner Manufacturer: **Eclipse**

26. Primary Combustion Chamber Burner Model: **TJ150**

27. Primary Combustion Chamber Burner Serial Number:

28. Number of Burners in Primary Combustion Chamber: **1**

29. Design Heat Input to Primary Combustion Chamber Burner(s): **1.0** million BTU/hr

30. Total Primary Combustion Chamber Combined Heat Input: million BTU/hr

31. Maximum Primary Combustion Chamber Heat Input Capacity of Each Burner: **1.5** million BTU/hr

32. Type of Combustion Controls: ☒ Automatic ☐ Manual

32.1. Describe Combustion Controls: **Modulating**

33. Secondary Combustion Chamber Burner Manufacturer: **Eclipse**

34. Secondary Combustion Chamber Burner Model: **TJ150**

35. Secondary Combustion Chamber Burner Serial Number:

36. Number of Burners in Secondary Combustion Chamber: **1**

37. Design Heat Input to Secondary Combustion Chamber Burner(s): **1.2** million BTU/hr

38. Total Secondary Combustion Chamber Combined Heat Input: million BTU/hr

39. Maximum Secondary Combustion Chamber Heat Input Capacity of Each Burner: **1.5** million BTU/hr

40. Type of Combustion Controls: ☒ Automatic ☐ Manual

40.1. Describe Combustion Controls: **Modulating**

41. Total Crematory Combined Heat Input: **3.0** million BTU/hr

Fuel Usage Information

42. Primary Fuel: ☒ Natural Gas ☐ Diesel ☐ No. 2 Fuel Oil ☐ No. 4 Fuel Oil ☐ No. 6 Fuel Oil ☐ Propane ☐ Biodiesel ☐ Other (specify):

42.1. Maximum Annual Primary Fuel Consumption: **11.2 (EST) MMCF**

42.2. Heat Content of Primary Fuel: **0.0010 BTU/MMCF**

42.3. Maximum Firing Rate: **0.003 MMCF/hr**

42.4. Percent Sulfur of Primary Fuel: **Unk** %

43. Secondary Fuel: ☐ Natural Gas ☐ Diesel ☐ No. 2 Fuel Oil ☐ No. 4 Fuel Oil ☐ No. 6 Fuel Oil ☐ Propane ☐ Biodiesel ☐ Other (specify):

43.1. Maximum Annual Secondary Fuel Consumption: **MMCF**

43.2. Heat Content of Secondary Fuel: **BTU/MMCF**

43.3. Maximum Firing Rate: **MMCF/hr**

43.4. Percent Sulfur of Secondary Fuel: %

Stack Information

44. How Does the Process Equipment Vent:
(check all that apply)
☒ Directly to the Atmosphere
☐ Through a Control Device Covered by Forms AQM-4.1 through 4.12

If the process equipment vents directly to the atmosphere proceed to Question 45. If the process equipment vents through a control device, provide the stack parameters on the control device form (AQM-4 Series) and proceed to Question 46.

45. Emission Point Name: **01**

45.1. Stack Height Above Grade: **17 feet (EST)**

45.2. Stack Exit Diameter: **1.67 feet**
(Provide Stack Dimensions If Rectangular Stack)

45.3. Is a Stack Cap Present? ☐ YES ☒ NO

45.4. Stack Configuration: ☒ Vertical ☐ Horizontal ☐ Downward-Venting
(check all that apply) ☐ Other (Specify):

45.5. Stack Exit Gas Temperature: **> 1100 °F**

45.6. Stack Exit Gas Flow Rate: **2300 ACFM**

45.7. Distance to Nearest Property Line: **feet**

45.8. Describe Nearest Obstruction:

45.9. Height of Nearest Obstruction: **feet**

45.10. Distance to Nearest Obstruction: **feet**

Stack Information

45.11. Are Stack Sampling Ports Provided? ☐ YES ☒ NO

Visible Emissions Monitoring Information

46. Proposed Technique Used to Monitor Visible Emissions:
☒ Opacity Monitor (COM)
☐ Manual (Method 9)
☐ Manual (Method 22)
☐ Other (Describe):

If an Opacity Monitor (COM) is used, complete the rest of Question 46. If not, proceed to Question 47.

46.1. Describe the Continuous Opacity Monitoring System: **Opacity Monitor which sends unit into safe mdoe if smoke is detected**

46.2. Manufacturer: EMS

46.3. Model: **Guardian**

46.4. Serial Number: **N/A**

47. Proposed Frequency for Opacity Monitoring: **Continous**

On-Site Storage Information

48. Is There On-Site Storage Capacity for Human Remains? ☐ YES ☐ NO

If YES, complete the rest of Question 48. If NO, proceed to Question 49.

48.1. Storage Capacity: **cubic feet**

49. Is There On-Site Storage Capacity for Animal Remains? ☐ YES ☐ NO

If YES, complete the rest of Question 49. If NO, proceed to Question 50.

49.1. Storage Capacity: **cubic feet**

Attach the Manufacturer's Specification Sheets for the On-Site Storage Equipment.

Voluntary Emissions Limitation Request Information

50. Are You Requesting Any Voluntary Emission Limitations to Avoid Major Source Status, Minor New Source Review, MACT, NSPS, etc.? ☐ YES ☒ NO

If YES, complete the rest of Question 50. If NO, proceed to Question 51.

50.1. Describe Any Proposed Emission Limitations:

Voluntary Operating Limitation Request Information

51. Are You Requesting Any Voluntary Operating Limitations to Avoid Major Source Status, Minor New Source Review, MACT, NSPS, etc.? ☐ YES ☒ NO

Voluntary Operating Limitation Request Information

If YES, complete the rest of Question 51. If NO, proceed to Question 52.

51.1. Describe Any Proposed Operating Limitations:

Additional Information

52. Is There Any Additional Information Pertinent to this Application? ☐ YES ☒ NO

If YES, complete the rest of Question 52.

52.1. Describe:

Emissions Information Application

If you are using this form electronically, press F1 at any time for help

Process Information

1.	Number of Individual Pieces of Process Equipment in Process: **1**
2.	Number of Individual Control Devices in Process: **1**

Emissions Information for First Emission Point/Stack

3.	Emission Point Name: **01**
4.	Equipment ID Number for all Process Equipment and Control Devices Venting Through Emission Point/Stack: **01**
5.	Pollutant Emissions

If more than 15 pollutants are emitted at this Emission Point/Stack, attach additional copies of this page as needed.

	Pollutant Name (Specify VOCs and HAPs Individually in 5.10 through 5.18)	CAS Number (Not required for 5.1 through 5.10)	Maximum Uncontrolled Emission Rate at Design Capacity	Maximum Controlled Emission Rate at Design Capacity	Annual Potential to Emit (PTE)	Requested Permitted Annual Emissions
5.1.	Particulate Matter (PM)		**0.3502 lbs/hour**	**0.3502 lbs/hour**	**0.6556** tons/year	**0.7** tons/year
5.2.	PM_{10}		**0.3502 lbs/hour**	**0.3502 lbs/hour**	**0.6556** tons/year	**0.7** tons/year
5.3.	$PM_{2.5}$		**0.3502 lbs/hour**	**0.3502 lbs/hour**	**0.6556** tons/year	**0.7** tons/year
5.4.	Sulfur Oxides (SO_X)		**0.163 lbs/hour**	**0.163 lbs/hour**	**0.3046** tons/year	**0.4** tons/year
5.5.	Nitrogen Oxides (NO_X)		**0.267 lbs/hour**	**0.267 lbs/hour**	**0.4998** tons/year	**0.5** tons/year
5.6.	Carbon Monoxide (CO)		**0.2212 lbs/hour**	**0.2212 lbs/hour**	**0.4141** tons/year	**0.5** tons/year
5.7.	Total Volatile Organic Compounds (VOCs)		**0.02242 lbs/hour**	**0.02242 lbs/hour**	**0.04198** tons/year	**0.05** tons/year
5.8.	Total Hazardous Air Pollutants (HAPs)		**lbs/hour**	**lbs/hour**	tons/year	tons/year

N/A

Emissions Information for First Emission Point/Stack

5.9.	CO_2		**lbs/hour**	**lbs/hour**	tons/year	tons/year
5.10.	CO_{2e}		**lbs/hour**	**lbs/hour**	tons/year	tons/year
5.11.			**lbs/hour**	**lbs/hour**	tons/year	tons/year
5.12.			**lbs/hour**	**lbs/hour**	tons/year	tons/year
5.13.			**lbs/hour**	**lbs/hour**	tons/year	tons/year
5.14.			**lbs/hour**	**lbs/hour**	tons/year	tons/year
5.15.			**lbs/hour**	**lbs/hour**	tons/year	tons/year

6. Provide Any Additional Information Necessary to Understanding the Emission Rates Provided Above:

Attach the Basis of Determination or Calculations for each Emission Rate provided above.

Emissions Information for Second Emission Point/Stack

7. Emission Point Name:

8. Equipment ID Number for all Process Equipment and Control Devices Venting Through Emission Point/Stack:

9. Pollutant Emissions

If more than 15 pollutants are emitted at this Emission Point/Stack, attach additional copies of this page as needed.

	Pollutant Name (Specify VOCs and HAPs Individually in 9.10 through 9.18)	CAS Number (Not required for 9.1 through 9.10)	Maximum Uncontrolled Emission Rate at Design Capacity	Maximum Controlled Emission Rate at Design Capacity	Annual Potential to Emit (PTE)	Requested Permitted Annual Emissions
9.1.	Particulate Matter (PM)		**lbs/hour**	**lbs/hour**	tons/year	tons/year
9.2.	PM_{10}		**lbs/hour**	**lbs/hour**	tons/year	tons/year
9.3.	$PM_{2.5}$		**lbs/hour**	**lbs/hour**	tons/year	tons/year

N/A

Emissions Information for Second Emission Point/Stack

9.4.	Sulfur Oxides (SO_X)		lbs/hour	lbs/hour	tons/year	tons/year
9.5.	Nitrogen Oxides (NO_X)		lbs/hour	lbs/hour	tons/year	tons/year
9.6.	Carbon Monoxide (CO)		lbs/hour	lbs/hour	tons/year	tons/year
9.7.	Total Volatile Organic Compounds (VOCs)		lbs/hour	lbs/hour	tons/year	tons/year
9.8.	Total Hazardous Air Pollutants (HAPs)		lbs/hour	lbs/hour	tons/year	tons/year
9.9.	CO_2		lbs/hour	lbs/hour	tons/year	tons/year
9.10.	CO_{2e}		lbs/hour	lbs/hour	tons/year	tons/year
9.11.			lbs/hour	lbs/hour	tons/year	tons/year
9.12.			lbs/hour	lbs/hour	tons/year	tons/year
9.13.			lbs/hour	lbs/hour	tons/year	tons/year
9.14.			lbs/hour	lbs/hour	tons/year	tons/year
9.15.			lbs/hour	lbs/hour	tons/year	tons/year

10. Provide Any Additional Information Necessary to Understanding the Emission Rates Provided Above:

Attach the Basis of Determination or Calculations for each Emission Rate provided above.

Emissions Information for Third Emission Point/Stack

11. Emission Point Name:

12. Equipment ID Number for all Process Equipment and Control Devices Venting Through Emission Point/Stack:

13. Pollutant Emissions

If more than 15 pollutants are emitted at this Emission Point/Stack, attach additional copies of this page as needed.

N/A

Emissions Information for Third Emission Point/Stack

	Pollutant Name (Specify VOCs and HAPs Individually in 13.10 through 13.18)	CAS Number (Not required for 13.1 through 13.10)	Maximum Uncontrolled Emission Rate at Design Capacity	Maximum Controlled Emission Rate at Design Capacity	Annual Potential to Emit (PTE)	Requested Permitted Annual Emissions
13.1.	Particulate Matter (PM)		**lbs/hour**	**lbs/hour**	tons/year	tons/year
13.2.	PM_{10}		**lbs/hour**	**lbs/hour**	tons/year	tons/year
13.3.	$PM_{2.5}$		**lbs/hour**	**lbs/hour**	tons/year	tons/year
13.4.	Sulfur Oxides (SO_X)		**lbs/hour**	**lbs/hour**	tons/year	tons/year
13.5.	Nitrogen Oxides (NO_X)		**lbs/hour**	**lbs/hour**	tons/year	tons/year
13.6.	Carbon Monoxide (CO)		**lbs/hour**	**lbs/hour**	tons/year	tons/year
13.7.	Total Volatile Organic Compounds (VOCs)		**lbs/hour**	**lbs/hour**	tons/year	tons/year
13.8.	Total Hazardous Air Pollutants (HAPs)		**lbs/hour**	**lbs/hour**	tons/year	tons/year
13.9.	CO_2		**lbs/hour**	**lbs/hour**	tons/year	tons/year
13.10.	CO_{2e}		**lbs/hour**	**lbs/hour**	tons/year	tons/year
13.11.			**lbs/hour**	**lbs/hour**	tons/year	tons/year
13.12.			**lbs/hour**	**lbs/hour**	tons/year	tons/year
13.13.			**lbs/hour**	**lbs/hour**	tons/year	tons/year
13.14.			**lbs/hour**	**lbs/hour**	tons/year	tons/year
13.15.			**lbs/hour**	**lbs/hour**	tons/year	tons/year

14. Provide Any Additional Information Necessary to Understanding the Emission Rates Provided Above:

Attach the Basis of Determination or Calculations for each Emission Rate provided above.

N/A

Emissions Information for Fourth Emission Point/Stack

15. Emission Point Name:

16. Equipment ID Number for all Process Equipment and Control Devices Venting Through Emission Point/Stack:

17. Pollutant Emissions

If more than 15 pollutants are emitted at this Emission Point/Stack, attach additional copies of this page as needed.

	Pollutant Name (Specify VOCs and HAPs Individually in 17.10 through 17.18)	CAS Number (Not required for 17.1 through 17.10)	Maximum Uncontrolled Emission Rate at Design Capacity	Maximum Controlled Emission Rate at Design Capacity	Annual Potential to Emit (PTE)	Requested Permitted Annual Emissions
17.1.	Particulate Matter (PM)		**lbs/hour**	**lbs/hour**	tons/year	tons/year
17.2.	PM_{10}		**lbs/hour**	**lbs/hour**	tons/year	tons/year
17.3.	$PM_{2.5}$		**lbs/hour**	**lbs/hour**	tons/year	tons/year
17.4.	Sulfur Oxides (SO_X)		**lbs/hour**	**lbs/hour**	tons/year	tons/year
17.5.	Nitrogen Oxides (NO_X)		**lbs/hour**	**lbs/hour**	tons/year	tons/year
17.6.	Carbon Monoxide (CO)		**lbs/hour**	**lbs/hour**	tons/year	tons/year
17.7.	Volatile Organic Compounds (VOCs)		**lbs/hour**	**lbs/hour**	tons/year	tons/year
17.8.	Total Hazardous Air Pollutants (HAPs)		**lbs/hour**	**lbs/hour**	tons/year	tons/year
17.9.	CO_2		**lbs/hour**	**lbs/hour**	tons/year	tons/year
17.10.	CO_{2e}		**lbs/hour**	**lbs/hour**	tons/year	tons/year
17.11.			**lbs/hour**	**lbs/hour**	tons/year	tons/year
17.12.			**lbs/hour**	**lbs/hour**	tons/year	tons/year
17.13.			**lbs/hour**	**lbs/hour**	tons/year	tons/year
17.14.			**lbs/hour**	**lbs/hour**	tons/year	tons/year
17.15.			**lbs/hour**	**lbs/hour**	tons/year	tons/year

Emissions Information for Fourth Emission Point/Stack

18. Provide Any Additional Information Necessary to Understanding the Emission Rates Provided Above:

Attach the Basis of Determination or Calculations for each Emission Rate provided above.

If there are more than four Emission Points/Stacks, attach additional copies of this form as needed.

Overall Process Emissions

19. Pollutant Emissions

If more than 15 pollutants are emitted from this Process, attach additional copies of this page as needed.

	Pollutant Name (Specify VOCs and HAPs Individually in 19.10 through 19.18)	CAS Number (Not required for 19.1 through 19.10)	Maximum Uncontrolled Emission Rate at Design Capacity	Maximum Controlled Emission Rate at Design Capacity	Annual Potential to Emit (PTE)	Requested Permitted Annual Emissions
19.1.	Particulate Matter (PM)		**0.3502 lbs/hour**	**0.3502 lbs/hour**	**0.6556** tons/year	**0.7** tons/year
19.2.	PM_{10}		**0.3502 lbs/hour**	**0.3502 lbs/hour**	**0.6556** tons/year	**0.7** tons/year
19.3.	$PM_{2.5}$		**0.3502 lbs/hour**	**0.3502 lbs/hour**	**0.6556** tons/year	**0.7** tons/year
19.4.	Sulfur Oxides (SO_X)		**0.163 lbs/hour**	**0.163 lbs/hour**	**0.3046** tons/year	**0.4** tons/year
19.5.	Nitrogen Oxides (NO_X)		**0.267 lbs/hour**	**0.267 lbs/hour**	**0.3046** tons/year	**0.4** tons/year
19.6.	Carbon Monoxide (CO)		**0.2212 lbs/hour**	**0.2212 lbs/hour**	**0.4141** tons/year	**0.5** tons/year
19.7.	Total Volatile Organic Compounds (VOCs)		**0.0224 lbs/hour**	**0.0224 lbs/hour**	**0.0419** tons/year	**0.05** tons/year
19.8.	Total Hazardous Air Pollutants (HAPs)		**lbs/hour**	**lbs/hour**	tons/year	tons/year
19.9.	CO_2		**lbs/hour**	**lbs/hour**	tons/year	tons/year
19.10.	CO_{2e}		**lbs/hour**	**lbs/hour**	tons/year	tons/year
19.12.			**lbs/hour**	**lbs/hour**	tons/year	tons/year

Overall Process Emissions

19.13.		**lbs/hour**	**lbs/hour**	tons/year	tons/year
19.14.		**lbs/hour**	**lbs/hour**	tons/year	tons/year
19.15.		**lbs/hour**	**lbs/hour**	tons/year	tons/year

20. Provide Any Additional Information Necessary to Understanding the Emission Rates Provided Above:

Attach the Basis of Determination or Calculations for each Emission Rate provided above.

Minor New Source Review Information

21. Does the Process Have the Potential to Emit More Than Five Tons Per Year of Any Pollutant? ☐ YES ☒ NO

22. Is the Source New or Existing? ☒ NEW ☐ EXISTING
See Question 11 of AQM-1

If the Process has the Potential to Emit more than five tons per year of any pollutant, and is a New Source, a Control Technology Analysis pursuant to Regulation No. 1125 Section 4 must be conducted and attached to this application.

Major New Source Review Information

23. Does the Process Have the Potential to Emit More Than the Significance Level for Any Pollutant? *(Check All That Apply)*

- ☐ Greater Than 25 Tons Per Year of Particulate Matter (PM)
- ☐ Greater Than 15 Tons Per Year of PM_{10}
- ☐ Greater Than 10 Tons Per Year of $PM_{2.5}$
- ☐ Greater Than 40 Tons Per Year of Sulfur Dioxide(SO_2)
- ☐ Greater Than 25 Tons Per Year of Nitrogen Oxides (NO_X) in New Castle and Kent County
- ☐ Greater Than 100 Tons Per Year of Nitrogen Oxides (NO_X) in Sussex County
- ☐ Greater Than 100 Tons Per Year of Carbon Monoxide (CO)
- ☐ Greater Than 25 Tons Per Year of Total Volatile Organic Compounds (VOCs) in New Castle and Kent County
- ☐ Greater Than 50 Tons Per Year of Total Volatile Organic Compounds (VOCs) in Sussex County
- ☐ Greater Than 75,000 Tons Per Year of Equivalent Carbon Dioxide (CO_{2e})

If the Process has the Potential to Emit greater than any of the amounts listed above 7 DE Admin. Code 1125 Sections 2 and/or 3 apply. Contact the Department at (302) 323-4542 or (302) 739-9402 for additional information

Additional Information

24. Is There Any Additional Information Pertinent to this Application? ☐ YES ☒ NO

If YES, complete the rest of Question 24.

24.1. Describe:

[Natural Minor]
[SIGNATURE AND ATTESTATION]
Application Receipt Document

Attestation

I certify that I have reviewed all of the information and forms in this application and attest that information is complete and accurate	yes
First Name	[redacted]
Last Name	[redacted]
Title	COO
Date	08/31/2026

Confidentiality

Please indicate if your application contains information which should be considered CONFIDENTIAL	No this application does not contain confidential information.

ADDITIONAL INFORMATION

8/26/2026

Air Quality Management

Division of Air Quality

Delaware Department of Natural Resources and Environmental Control (DNREC)

100 West Water Street, Suite 6A

Dover, DE 19904

RE: Air Permit Application (Form AQM-1) – Installation of New Human Crematory Unit

Applicant: Triple CCC Enterprises LLC, DBA Dearly Departed Crematory Services

Facility Location: 401 Cornell Drive, Unit J12, Wilmington, DE 19801

Dear Permitting Staff,

Please accept the enclosed air permit application submitted on behalf of Triple CCC Enterprises LLC, DBA Dearly Departed Crematory Services. We are applying for a permit to construct and operate a new human crematory unit at our facility located at 401 Cornell Drive, Unit J12, Wilmington, DE 19801.

Project Overview & Equipment Specifications

The proposed project consists of installing one (1) new Matthews Environmental Solutions Power Pak I (Model IE43-PPI) human crematory unit. Key operational specifications include:

- **Fuel Source:** Natural gas-fired burners (Primary: 1.0 MMBtu/hr; Secondary: 1.2 MMBtu/hr).
- **Operating Schedule:** Up to 12 hours per day, 6 days per week, 52 weeks per year (3,744 total operating hours per year) to accommodate operational flexibility.
- **Emissions Control:** Equipped with a secondary combustion chamber operating between 1,200°F and 1,800°F with a retention time of >1 second, and an EMS Guardian continuous opacity monitoring system.

Location & Permit Requirements

The facility is situated within the Delaware Industrial Park and is zoned Heavy Industrial / Industrial. The site is located entirely outside the Delaware Coastal Zone boundary. All emissions for Particulate Matter, , , , and remain well below major source thresholds, qualifying the unit as a Natural Minor Source.

Enclosed Application Packet

Enclosed with this submission are the following documents:

1. Form AQM-1 (Administrative Information)
2. Form AQM-2 (Process Flow Diagram)
3. Form AQM-3.11 (Crematories Application)
4. Form AQM-5 (Emissions Information Application)
5. Manufacturer Specification Sheets & Emission Calculations
6. Proof of Local Zoning & Coastal Zone Location Map Verification
7. Applicant Background Information Questionnaire (7 Del. C. Ch. 79)
8. Required Application and Advertising Fees

Thank you for your review of this application. If you have any questions or require additional information, please contact [redacted] at (302) 507-5470 or via email at [redacted].

Sincerely,

[redacted]

Chief Operating Officer

Triple CCC Enterprises LLC, DBA Dearly Departed Crematory Services