ROADWAY, STORM DRAIN, SEWER, WATER, & ESC

FOR

TWIN MASTS

BROADKILL HUNDRED
SUSSEX COUNTY, DELAWARE
FOR
TWIN MASTS, LLC

LEGEND

	EXISTING	PROPOSED
PROPERTY LINE		
EASEMENT LINE		
SETBACK LINE		
CONCRETE MONUMENT FOUND	CMF	N/A
IRON PIPE FOUND	IPF	N/A
BENCH MARK	ELEV.	N/A
SPOT ELEV. LABEL	× 19.25	19.25
MAJOR CONTOUR	10	10
MINOR CONTOUR	7	7
ROAD CENTERLINE		
EDGE OF CONCRETE		
EDGE OF PAVEMENT		
EDGE OF GRAVEL		N/A
PAINT STRIPE		
CURB		
PAVEMENT HATCH		
CONCRETE HATCH		
BUILDING OUTLINE		
SIDEWALK		
SIDEWALK HATCH		
FENCE LINE		N/A
SIGN		
EDGE OF WETLAND	WL	N/A
FLOODPLAIN		N/A
STORM MANHOLE	D	D
CURB INLET		
YARD INLET		
STORM PIPE		
RIP RAP		
SANITARY MANHOLE	S	S
SANITARY CLEANOUT	CO	C/O
SANITARY PIPE	SS	SS
WATER VALVE	WV	WV
WATER PIPE	W	W
FIRE HYDRANT		
OVERHEAD ELECTRIC	E	N/A
UNDERGROUND ELECTRIC	E	N/A
UNDERGROUND TELECOMMUNICATIONS	TC	N/A
UTILITY POLE		N/A
LIGHT POLE		
DECIDUOUS TREE		N/A
CONIFEROUS TREE		N/A
TREE LINE		
EDGE OF WATER/POND	N/A	
SWALE CL w/ FLOW DIRECTION	N/A	
RESOURCE PROTECTION ZONE	N/A	ZONE B

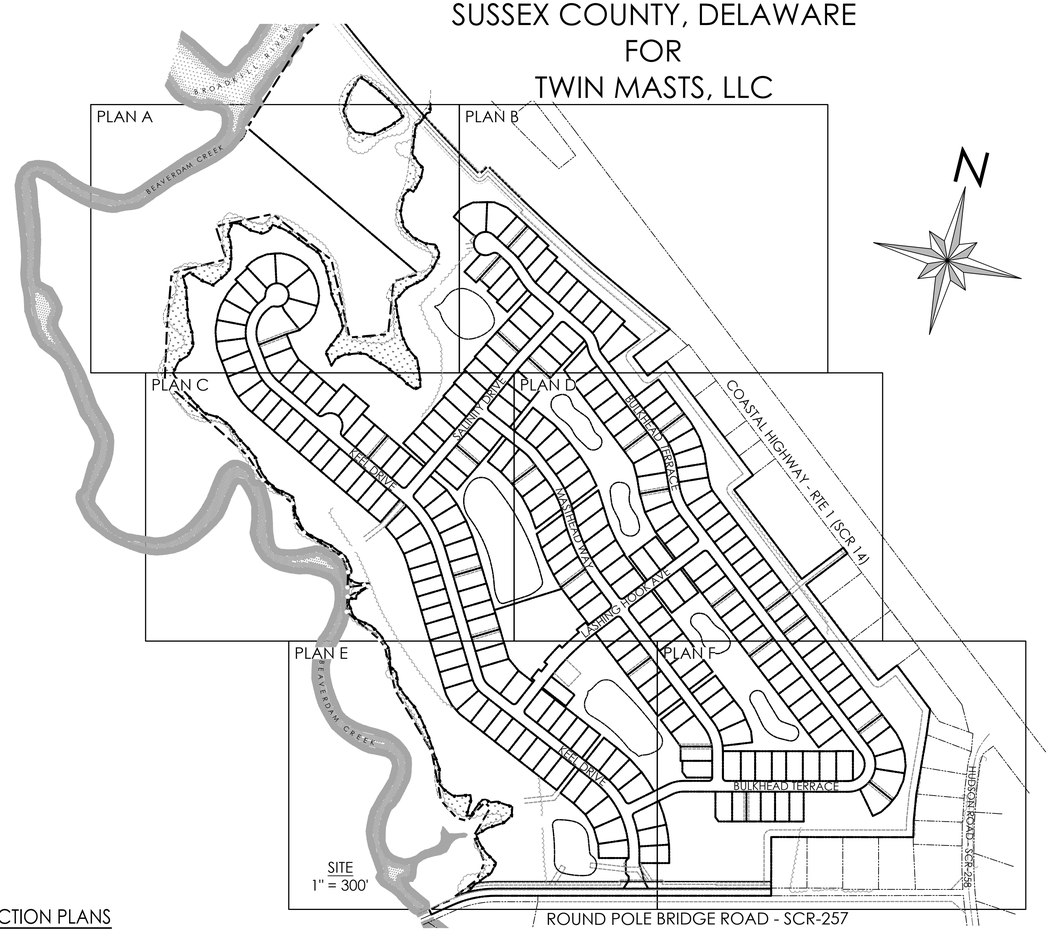

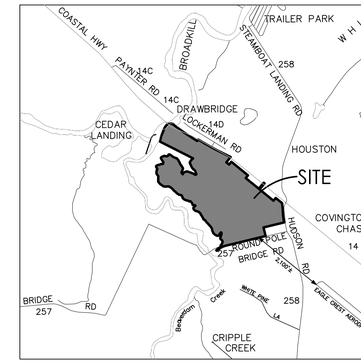

VICINITY MAP

SCALE: 1" = 2,000'

SITE DATA:

OWNER/DEVELOPER: TWIN MASTS, LLC
5950 SYMPHONY WOODS ROAD, SUITE 408
COLUMBIA, MD 21044
PHONE: 410.861.7159
CONTACT: MEGAN CONNER

ENGINEER/
LAND PLANNER: SOLUTIONS IPEM, LLC
303 NORTH BEDFORD STREET
GEORGETOWN, DE 19947
PHONE: 302.297.9215
CONTACT: JIM ERIKSEN, PE

- TM 235-16.00-69.00
  DEED REFERENCE: 5650/41
  TM 235-16.00-68.00
  DEED REFERENCE: 5701/102
- EXISTING ZONING:
  AR-1
- PROPOSED USE: AR-1 CLUSTER SUBDIVISION

  SINGLE FAMILY LOTS = 249 LOTS
  MIN. LOT AREA = 7,500 S.F.
  MIN. LOT WIDTH = 60'

  MAXIMUM BUILDING HEIGHT: 42'

  FRONT YARD = 25' (15' ON CORNER)
  SIDE YARD = 10'
  REAR YARD = 10'
- BOUNDARY AND TOPOGRAPHY AS SHOWN HEREON ARE AS PROVIDED BY SOLUTIONS IPEM LLC
- PROPERTY IS LOCATED IN FLOOD ZONES AE (EL8), AE (EL9), AE (EL10) - SPECIAL FLOOD HAZARD AREAS SUBJECT TO INUNDATION BY THE 1% ANNUAL CHANCE FLOOD. BASE FLOOD ELEVATIONS DETERMINED. ZONE X (SHADED) - AREAS DETERMINED TO BE WITHIN THE 0.2% ANNUAL FLOOD CHANCE FLOOD HAZARD, AND FLOOD ZONE X UNSHADED - AREAS DETERMINED TO BE OUTSIDE THE 0.2% CHANCE FLOODPLAIN, PER FIRM MAP NUMBER 10005C0167K AND 10005C0186K, MAPS REVISED MARCH 16, 2015.
- WATER SUPPLY:
  ARTESIAN WATER COMPANY, INC.
- SANITARY SEWER:
  ARTESIAN WASTEWATER MANAGEMENT, INC.
- GROSS AREA = 132.901 AC.±
  NET AREA = 132.901 - 8.38 AC = 124.52 AC +/-
  ALLOWABLE UNITS = 2.0 DU/AC * 124.52 AC.± = 249.0
  PROPOSED UNITS = 249
  (1.999 DU/AC.)
- PROJECT DATUM:
  HORIZONTAL: DELAWARE STATE PLANE NAD 83
  VERTICAL: NAVD 88

PRELIMINARY PLAT INDEX

1 COVER SHEET
2 CONDITIONS OF APPROVAL
3 EXISTING CONDITIONS PLAN A
4 EXISTING CONDITIONS PLAN B
5 EXISTING WETLAND COORDINATE TABLES
6 PRELIMINARY PLAT - PLAN A
7 PRELIMINARY PLAT - PLAN B
8 PRELIMINARY PLAT - PLAN C
9 PRELIMINARY PLAT - PLAN D
10 PRELIMINARY PLAT - PLAN E
11 PRELIMINARY PLAT - PLAN F
12 PRELIMINARY PLAT - PLAN G
13 PRELIMINARY PLAT - LANDSCAPE PLAN A
14 PRELIMINARY PLAT - LANDSCAPE PLAN B
15 PRELIMINARY PLAT - LANDSCAPE PLAN C
16 PRELIMINARY PLAT - LANDSCAPE PLAN D
17 PRELIMINARY PLAT - LANDSCAPE PLAN E
18 PRELIMINARY PLAT - LANDSCAPE PLAN F
19 PRELIMINARY PLAT - LANDSCAPE PLAN G

NOTES:

1. ALL ON-SITE STREETS ARE PRIVATE AND SHALL BE MAINTAINED BY THE OWNER UNTIL DEDICATION TO THE HOMEOWNERS ASSOCIATION. THE PERPETUAL MAINTENANCE OF THE STREETS SHALL BE BY THE RESPECTIVE ORGANIZATION.

2. STORMWATER MANAGEMENT AND STORM DRAINAGE SHALL BE IN ACCORDANCE WITH THE SUSSEX COUNTY CONSERVATION DISTRICT AND SUSSEX COUNTY ENGINEERING REQUIREMENTS. THE SITE IS TO BE TREATED BY MULTIPLE WET PONDS. MAINTENANCE OF THE ON-SITE STORMWATER MANAGEMENT FACILITIES AND STORM DRAINAGE SYSTEM SHALL BE BY THE OWNER UNTIL DEDICATION TO THE HOMEOWNERS ASSOCIATION. THE PERPETUAL MAINTENANCE OF THE ABOVE PROACTIVE SHALL BE BY THE RESPECTIVE ORGANIZATION.

3. ALL OPEN SPACE, INCLUDING BUFFERS AND FOREST STRIPS, SHALL BE MAINTAINED BY THE HOMEOWNERS ASSOCIATION.

4. FOR ANY NEW DEVELOPMENT LOCATED IN WHOLE OR IN PART WITH 50 FEET OF THE BOUNDARY OF LAND USED PRIMARILY FOR AGRICULTURAL PURPOSES, NO IMPROVEMENT REQUIRING AN OCCUPANCY APPROVAL FOR A RESIDENTIAL TYPE USE SHALL BE CONSTRUCTED WITHIN 50 FEET OF THE BOUNDARY OF THE LANDS USED PRIMARILY FOR AGRICULTURAL PURPOSES.

5. POTABLE WATER, SANITARY SEWER, STORM DRAINAGE, STREET PAVEMENT SHALL BE CONSTRUCTED BY DEVELOPER, PHASING OF IMPROVEMENTS SHALL BE PER COUNTY AND CONSERVATION DISTRICT REQUIREMENTS.

6. THIS PROPERTY IS LOCATED IN THE VICINITY OF LAND USED PRIMARILY FOR AGRICULTURAL PURPOSED ON WHICH NORMAL AGRICULTURAL PURPOSED AND ACTIVITIES HAVE BEE AFFORDED THE HIGHEST PRIORITY USE STATUS. IT CAN BE ANTICIPATED THAT SUCH USES NOW OR IN THE FUTURE INVOLVE NOISE, DUST, MANURE AND OTHER ODORS, THE USE OF AGRICULTURAL CHEMICALS AND NIGHTTIME FARM OPERATIONS. THE USE AND ENJOYMENT OF THIS PROPERTY IS EXPRESSLY CONDITIONED ON ACCEPTANCE OF ANY ANNOYANCE OR INCONVENIENCE WHICH MAY RESULT FROM NORMAL AGRICULTURAL USES AND ACTIVITIES.

7. THE PROPERTY IS NOT LOCATED WITHIN ANY TRANSPORTATION IMPROVEMENT DISTRICTS.

8. ALL SUBDIVISION LOTS SHALL HAVE FIVE FOOT WIDE EASEMENTS ALONG ALL LOT LINES FOR A TOTAL EASEMENT WIDTH OF 10 FEET ALONG A LOT LINE COMMON TO TWO LOTS. EASEMENTS ALONG PERIMETER (RIGHT-OF-WAY AND OPEN SPACE) SHALL BE 10 FEET IN WIDTH.

9. ARTESIAN WATER COMPANY INC. AND ARTESIAN WASTEWATER MANAGEMENT INC. ARE HEREBY GRANTED UNINTERRUPTED AND PERPETUAL EASEMENT WITHIN THE PRIVATE COMMUNITY STREET RIGHT-OF-WAY AND OPEN SPACE.

CONSTRUCTION PLANS

1 - COVER
2 - NOTES
3 - EXISTING CONDITIONS 1
4 - EXISTING CONDITIONS 2
5 - INDEX
6 - ROAD AND STORM DRAIN PLAN A
7 - ROAD AND STORM DRAIN PLAN B
8 - ROAD AND STORM DRAIN PLAN C
9 - ROAD AND STORM DRAIN PLAN D
10 - ROAD AND STORM DRAIN PLAN E
11 - ROAD AND STORM DRAIN PLAN F
12 - ROAD PROFILES 1
13 - ROAD PROFILES 2
14 - ROAD PROFILES 3
15 - ROAD PROFILES 4
16 - DETAILED INTERSECTION GRADING 1
17 - DETAILED INTERSECTION GRADING 2
18 - STORM DRAIN PROFILES 1
19 - STORM DRAIN PROFILES 2
20 - STORM DRAIN PROFILES 3
21 - STORM DRAIN PROFILES 4
22 - STORM DRAIN PROFILES 5
23 - STORM DRAIN PROFILES 6
24 - STORM DRAIN PIPE AND STRUCTURE CHARTS
25 - BULK GRADING PLAN A
26 - BULK GRADING PLAN B
27 - BULK GRADING PLAN C
28 - BULK GRADING PLAN D
29 - BULK GRADING PLAN E
30 - BULK GRADING PLAN F
31 - DETAILS 1
32 - DETAILS 2
33 - DETAILS 3
34 - SANITARY SEWER INDEX
35 - SANITARY SEWER PLAN A
36 - SANITARY SEWER PLAN B
37 - SANITARY SEWER PLAN C
38 - SANITARY SEWER PLAN D
39 - SANITARY SEWER PLAN E
40 - SANITARY SEWER PLAN F
41 - SANITARY SEWER PROFILE 1
42 - SANITARY SEWER PROFILE 2
43 - SANITARY SEWER PROFILE 3
44 - SANITARY SEWER PROFILE 4
45 - SANITARY SEWER PROFILE 5
46 - SANITARY SEWER PROFILE 6
47 - SANITARY SEWER DETAILS 1
48 - SANITARY SEWER DETAILS 2
49 - PUMP STATION SITE PLAN
50 - PUMP STATION DETAILS 1
51 - PUMP STATION DETAILS 2
52 - FIRE MARSHAL PLAN
53 - WATER PLAN A
54 - WATER PLAN B
55 - WATER PLAN C
56 - WATER PLAN D
57 - WATER PLAN E
58 - WATER PLAN F
59 - WATER PROFILES 1
60 - WATER PROFILES 2
61 - WATER PROFILES 3
62 - ARTESIAN WATER NOTES AND DETAILS
63 - ARTESIAN WATER DETAILS
64 - EROSION AND SEDIMENT CONTROL COVER
65 - OVERALL STORMWATER AND EARTHWORK PHASING PLAN
66 - DETAILED STORMWATER & EARTHWORK PHASING PLAN
67 - PIPE OUTLET SEDIMENT TRAP
68 - PRE-CONSTRUCTION SITE SWM PLAN POND PHASE
69 - PRE-CONSTRUCTION SITE SWM PLAN PHASE 1
70 - PRE-CONSTRUCTION SITE SWM PLAN PHASE 2
71 - PRE-CONSTRUCTION SITE SWM PLAN PHASE 3
72 - PRE-CONSTRUCTION SITE SWM PLAN PHASE 4
73 - PRE-CONSTRUCTION SITE SWM PLAN PHASE 5
74 - PRE-CONSTRUCTION SITE SWM PLAN PHASE 6
75 - PRE-CONSTRUCTION SITE SWM PLAN PHASE 7
76 - CONSTRUCTION SITE SWM PLAN POND PHASE
77 - CONSTRUCTION SITE SWM PLAN PHASE 1
78 - CONSTRUCTION SITE SWM PLAN PHASE 2
79 - CONSTRUCTION SITE SWM PLAN PHASE 3
80 - CONSTRUCTION SITE SWM PLAN PHASE 4
81 - CONSTRUCTION SITE SWM PLAN PHASE 5
82 - CONSTRUCTION SITE SWM PLAN PHASE 6
83 - CONSTRUCTION SITE SWM PLAN PHASE 7
84 - EROSION AND SEDIMENT CONTROL NOTES & DETAILS 1
85 - EROSION AND SEDIMENT CONTROL NOTES & DETAILS 2
86 - EROSION AND SEDIMENT CONTROL NOTES & DETAILS 3
87 - EROSION AND SEDIMENT CONTROL NOTES & DETAILS 4
88 - EROSION AND SEDIMENT CONTROL NOTES & DETAILS 5
89 - EROSION AND SEDIMENT CONTROL NOTES & DETAILS 6
90 - POST CONSTRUCTION SITE SWM
91 - POST-CONSTRUCTION SWM PLAN - WET POND 1
92 - POST-CONSTRUCTION SWM PLAN - WET POND 2
93 - POST-CONSTRUCTION SWM PLAN - WET POND 3
94 - POST-CONSTRUCTION SWM PLAN - WET POND 3-2
95 - POST-CONSTRUCTION SWM PLAN - INFILTRATION BASIN 4
96 - POST-CONSTRUCTION SWM PLAN - INFILTRATION BASIN 5
97 - POST-CONSTRUCTION SWM PLAN - INFILTRATION BASIN 6
98 - POST-CONSTRUCTION SWM PLAN - INFILTRATION BASIN 7
99 - POST-CONSTRUCTION SWM PLAN - WET POND 8
100 - PHASING PLAN
E-1 - PUMP STATION SITE PLAN & LEGEND
E-2 - S.E.C. DIAGRAM & DETAIL
E-3 - DETAILS, DIAGRAM, & SCHEDULE

DELDOT PLAN INDEX

1 - TITLE
2 - LEGEND
3 - CONSTRUCTION & MOT NOTES
4 - PLAN SHEET INDEX
5 - 7 - TYPICAL SECTIONS
8 - HORIZONTAL AND VERTICAL CONTROL
9 - 11 - CONSTRUCTION PLANS
12 - 14 - GRADING PLANS
15 - PROFILES & CONSTRUCTION DETAILS 1
16 - ROAD PROFILE - SCR-257 ROUND POLE BRIDGE ROAD
17 - 19 - SIGNING AND STRIPING PLANS
20 - 32 - ROUND POLE BRIDGE CROSS SECTIONS
33 - 35 - EROSION AND SEDIMENT CONTROL PLAN

WETLAND STATEMENT

I, Edward M. Launay, PWS, STATES THAT THE BOUNDARIES OF WATERS OF THE UNITED STATES INCLUDING WETLANDS SUBJECT TO THE CORPS OF ENGINEERS REGULATORY PROGRAM DELINEATED UPON THIS PLAN HAVE BEEN DETERMINED USING MY PROFESSIONAL JUDGMENT IN ACCORDANCE WITH THE 1987 CORPS OF ENGINEERS WETLANDS DELINEATION MANUAL, ATLANTIC GULF COAST REGIONAL SUPPLEMENT, REGULATIONS AND SUPPLEMENTAL GUIDANCE (33 CFR 328.3(a)(8),Waters of the U.S. Definition/CECW-OR, 10-7-1991, Questions and Answers on the 1987 COE Manual/CECW-OR, 9-26-1990, RGL 90-7/CECW-OR, 3-6-1992, Clarification and Interpretation of the 1987 Manual). THIS DELINEATION HAS NOT BEEN CONDUCTED FOR USDA PROGRAM OR AGRICULTURAL PURPOSES.

EDWARD M. LAUNAY, PWS No. 875 DATE
SOCIETY OF WETLANDS SCIENTISTS
CORPS OF ENGINEERS,
CERTIFIED WETLAND DELINEATOR WDCP93MD0510036B)

ENGINEER'S CERTIFICATION

I HEREBY CERTIFY THAT THESE DRAWINGS HAVE BEEN PREPARED UNDER MY SUPERVISION.

JIM ERIKSEN, PE DATE

DEVELOPER'S CERTIFICATION

THE DEVELOPER, TWIN MASTS, LLC, HEREBY CERTIFIES THAT THESE DRAWINGS HAVE BEEN APPROVED.

MEGAN CONNER DATE

APPROVED, SUSSEX COUNTY ENGINEER AGREEMENT #1203

NAME DATE

solutions
303 North Bedford Street
Georgetown, DE 19947
T. 302.297.9215
3003 Merritt Mill Road
Salisbury, MD 21804
T. 410.572.8833
www.solutionsipem.com

Copyright © 2023

JAMES R. ERIKSEN
LICENSE
DELAWARE
PROFESSIONAL ENGINEER

Date 07/01/2024

REVISIONS

NO.	DATE	DESCRIPTION
1	5/23/24	PLANS REVISED PER AGENCIES COMMENTS.
2	6/28/24	PLANS REVISED PER AGENCIES COMMENTS.
3	7/1/24	PLANS REVISED PER ARTESIAN COMMENTS.

COVER
for
TWIN MASTS
SUSSEX COUNTY, DELAWARE
Prepared for: Twin Masts, LLC

Date: 3/12/24
Job Number: G21029
Scale: AS NOTED
Drawn By: JPR
Designed By: JPR
Approved By: JRE

Sheet No.: 1

File Name: G21029-Cover

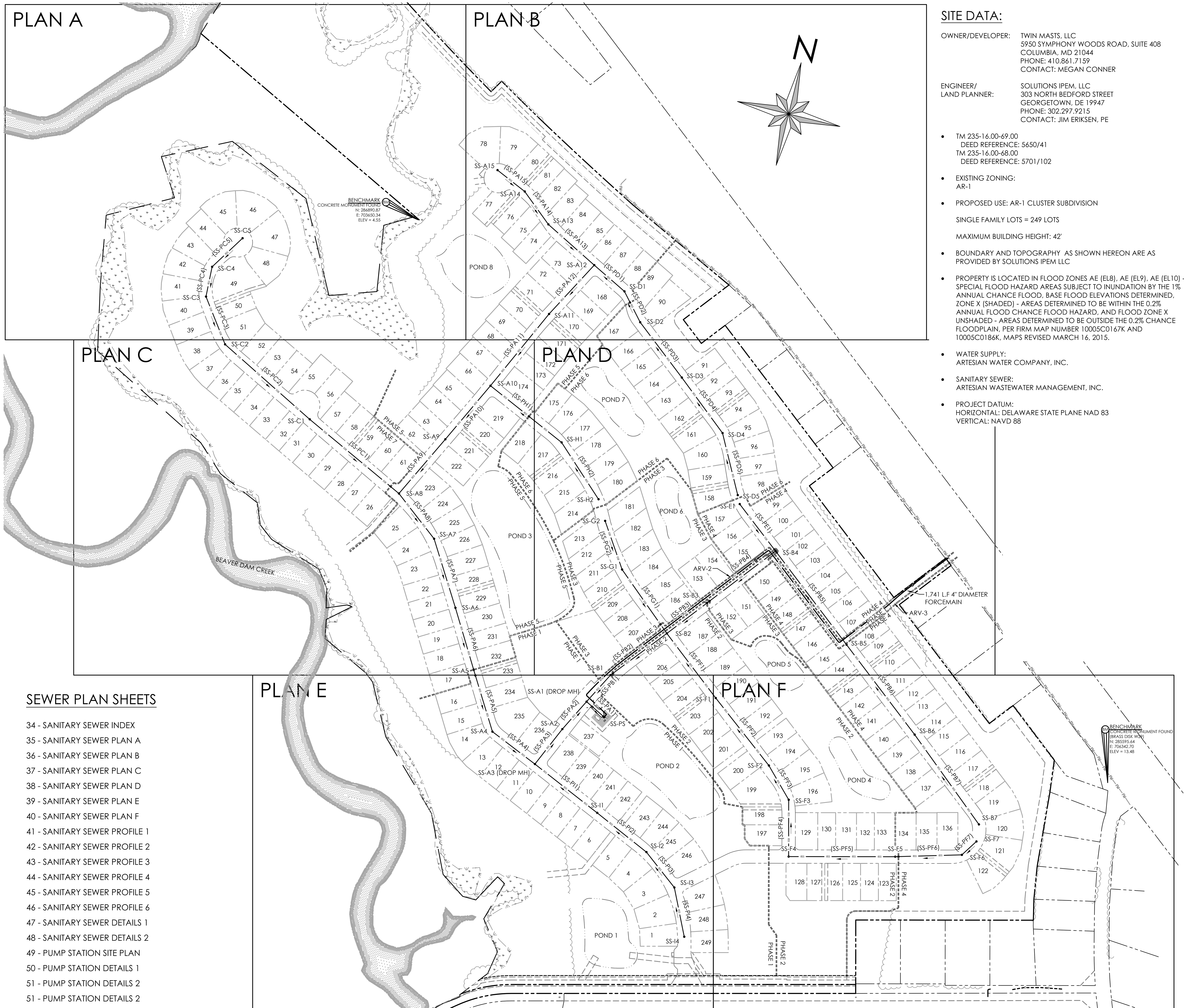

SITE DATA:

OWNER/DEVELOPER: TWIN MASTS, LLC
5950 SYMPHONY WOODS ROAD, SUITE 408
COLUMBIA, MD 21044
PHONE: 410.861.7159
CONTACT: MEGAN CONNER

ENGINEER/ LAND PLANNER: SOLUTIONS IPEM, LLC
303 NORTH BEDFORD STREET
GEORGETOWN, DE 19947
PHONE: 302.297.9215
CONTACT: JIM ERIKSEN, PE

- TM 235-16.00-69.00
  DEED REFERENCE: 5650/41
  TM 235-16.00-68.00
  DEED REFERENCE: 5701/102
- EXISTING ZONING:
  AR-1
- PROPOSED USE: AR-1 CLUSTER SUBDIVISION

  SINGLE FAMILY LOTS = 249 LOTS

  MAXIMUM BUILDING HEIGHT: 42'
- BOUNDARY AND TOPOGRAPHY AS SHOWN HEREON ARE AS PROVIDED BY SOLUTIONS IPEM LLC
- PROPERTY IS LOCATED IN FLOOD ZONES AE (EL8), AE (EL9), AE (EL10) - SPECIAL FLOOD HAZARD AREAS SUBJECT TO INUNDATION BY THE 1% ANNUAL CHANCE FLOOD, BASE FLOOD ELEVATIONS DETERMINED, ZONE X (SHADED) - AREAS DETERMINED TO BE WITHIN THE 0.2% ANNUAL FLOOD CHANCE FLOOD HAZARD, AND FLOOD ZONE X UNSHADED - AREAS DETERMINED TO BE OUTSIDE THE 0.2% CHANCE FLOODPLAIN, PER FIRM MAP NUMBER 10005C0167K AND 10005C0186K, MAPS REVISED MARCH 16, 2015.
- WATER SUPPLY:
  ARTESIAN WATER COMPANY, INC.
- SANITARY SEWER:
  ARTESIAN WASTEWATER MANAGEMENT, INC.
- PROJECT DATUM:
  HORIZONTAL: DELAWARE STATE PLANE NAD 83
  VERTICAL: NAVD 88

SEWER PLAN SHEETS

34 - SANITARY SEWER INDEX
35 - SANITARY SEWER PLAN A
36 - SANITARY SEWER PLAN B
37 - SANITARY SEWER PLAN C
38 - SANITARY SEWER PLAN D
39 - SANITARY SEWER PLAN E
40 - SANITARY SEWER PLAN F
41 - SANITARY SEWER PROFILE 1
42 - SANITARY SEWER PROFILE 2
43 - SANITARY SEWER PROFILE 3
44 - SANITARY SEWER PROFILE 4
45 - SANITARY SEWER PROFILE 5
46 - SANITARY SEWER PROFILE 6
47 - SANITARY SEWER DETAILS 1
48 - SANITARY SEWER DETAILS 2
49 - PUMP STATION SITE PLAN
50 - PUMP STATION DETAILS 1
51 - PUMP STATION DETAILS 2
51 - PUMP STATION DETAILS 2

SANITARY SEWER STRUCTURE CHART

NAME	RIM ELEV(FT)	INVERT-IN ELEV(FT) (1)	INVERT-IN ELEV(FT) (2)	INVERT-IN ELEV(FT) (3)	INVERT-OUT ELEV(FT)
SS-PS	13.12	-4.80	N/A	N/A	8.04
SS-A1 (DROP MH)	11.18	5.50	-4.40	N/A	-4.57
SS-A2	10.10	-3.98	N/A	N/A	-4.03
SS-A3 (DROP MH)	11.08	4.22	-3.48	N/A	-3.53
SS-A4	10.44	-2.89	N/A	N/A	-2.94
SS-A5	9.96	-2.25	N/A	N/A	-2.30
SS-A6	9.25	-1.49	N/A	N/A	-1.54
SS-A7	9.92	-0.71	N/A	N/A	-0.76
SS-A8	10.79	-0.08	-0.08	N/A	-0.13
SS-A9	10.57	0.69	N/A	N/A	0.64
SS-A10	12.78	1.45	1.45	N/A	1.40
SS-A11	11.98	2.43	N/A	N/A	2.38
SS-A12	12.92	3.15	3.15	N/A	3.10
SS-A13	10.70	3.82	N/A	N/A	3.77
SS-A14	9.44	4.28	N/A	N/A	4.23
SS-A15	9.74	N/A	N/A	N/A	4.74
SS-B1	12.58	5.91	N/A	N/A	5.86
SS-B2	15.75	6.67	6.67	6.67	6.62
SS-B3	14.99	7.23	N/A	N/A	7.18
SS-B4	18.45	8.14	8.14	N/A	8.09
SS-B5	17.21	9.37	N/A	N/A	9.32
SS-B6	18.77	10.56	N/A	N/A	10.51
SS-B7	21.22	N/A	N/A	N/A	14.85
SS-C1	9.73	2.45	N/A	N/A	2.40
SS-C2	9.81	3.91	N/A	N/A	3.86
SS-C3	9.41	4.48	N/A	N/A	4.43
SS-C4	9.73	4.84	N/A	N/A	4.79
SS-C5	10.40	N/A	N/A	N/A	5.40
SS-D1	12.54	5.82	N/A	N/A	5.77
SS-D2	13.07	6.35	N/A	N/A	6.30
SS-D3	14.45	7.10	N/A	N/A	7.05
SS-D4	15.82	7.84	N/A	N/A	7.79
SS-D5	17.10	N/A	N/A	N/A	11.16
SS-E1	17.17	N/A	N/A	N/A	12.17
SS-F1	14.74	9.12	N/A	N/A	9.07
SS-F2	15.49	10.03	N/A	N/A	9.98
SS-F3	15.89	10.48	N/A	N/A	10.43
SS-F4	16.76	11.10	N/A	N/A	11.05
SS-F5	21.16	12.71	N/A	N/A	12.66
SS-F6	22.05	14.01	N/A	N/A	13.96
SS-F7	21.60	N/A	N/A	N/A	14.38
SS-G1	14.64	7.97	N/A	N/A	7.92
SS-G2	13.80	N/A	N/A	N/A	8.80
SS-H1	12.52	7.57	N/A	N/A	7.52
SS-H2	13.48	N/A	N/A	N/A	8.48
SS-I1	11.02	5.07	N/A	N/A	5.02
SS-I2	12.16	5.75	N/A	N/A	5.70
SS-I3	12.72	6.25	N/A	N/A	6.20
SS-I4	11.92	N/A	N/A	N/A	6.92

SANITARY SEWER PIPE TABLE

NAME	SIZE (IN)	MATERIAL	LENGTH (FT)	SLOPE (%)	UP INVERT (FT)	DOWN INVERT (FT)
SS-PA1	10	Ductile Iron	78.23	0.30	-4.57	-4.80
SS-PA2	8	Ductile Iron	122.95	0.30	-4.03	-4.40
SS-PA3	8	PVC - SDR 26	148.99	0.30	-3.53	-3.98
SS-PA4	8	PVC - SDR 26	179.12	0.30	-2.94	-3.48
SS-PA5	8	PVC - SDR 26	197.19	0.30	-2.30	-2.89
SS-PA6	8	PVC - SDR 26	236.77	0.30	-1.54	-2.25
SS-PA7	8	PVC - SDR 26	242.29	0.30	-0.76	-1.49
SS-PA8	8	PVC - SDR 26	192.26	0.30	-0.13	-0.71
SS-PA9	8	PVC - SDR 26	239.30	0.30	0.64	-0.08
SS-PA10	8	PVC - SDR 26	235.22	0.30	1.40	0.69
SS-PA11	8	PVC - SDR 26	310.67	0.30	2.38	1.45
SS-PA12	8	PVC - SDR 26	223.27	0.30	3.10	2.43
SS-PA13	8	PVC - SDR 26	205.77	0.30	3.77	3.15
SS-PA14	8	PVC - SDR 26	135.92	0.30	4.23	3.82
SS-PA15	8	PVC - SDR 26	116.13	0.40	4.74	4.28
SS-PB1	8	PVC - SDR 26	119.89	0.30	5.86	5.50
SS-PB2	8	PVC - SDR 26	235.06	0.30	6.62	5.91
SS-PB3	8	PVC - SDR 26	169.46	0.30	7.18	6.67
SS-PB4	8	PVC - SDR 26	288.12	0.30	8.09	7.23
SS-PB5	8	PVC - SDR 26	394.19	0.30	9.32	8.14
SS-PB6	8	PVC - SDR 26	378.40	0.30	10.51	9.37
SS-PB7	8	PVC - SDR 26	370.50	1.16	14.85	10.56
SS-PC1	8	PVC - SDR 26	389.16	0.64	2.40	-0.08
SS-PC2	8	PVC - SDR 26	379.17	0.37	3.86	2.45
SS-PC3	8	PVC - SDR 26	172.67	0.30	4.43	3.91
SS-PC4	8	PVC - SDR 26	102.04	0.30	4.79	4.48
SS-PC5	8	PVC - SDR 26	140.09	0.40	5.40	4.84
SS-PD1	8	PVC - SDR 26	134.24	1.95	5.77	3.15
SS-PD2	8	PVC - SDR 26	116.26	0.41	6.30	5.82
SS-PD3	8	PVC - SDR 26	232.34	0.30	7.05	6.35
SS-PD4	8	PVC - SDR 26	230.87	0.30	7.79	7.10
SS-PD5	8	PVC - SDR 26	214.36	1.55	11.16	7.84
SS-PE1	8	PVC - SDR 26	198.09	2.03	12.17	8.14
SS-PF1	8	PVC - SDR 26	271.87	0.88	9.07	6.67
SS-PF2	8	PVC - SDR 26	288.11	0.30	9.98	9.12
SS-PF3	8	PVC - SDR 26	132.69	0.30	10.43	10.03
SS-PF4	8	PVC - SDR 26	190.60	0.30	11.05	10.48
SS-PF5	8	PVC - SDR 26	357.49	0.44	12.66	11.10
SS-PF6	8	PVC - SDR 26	223.52	0.56	13.96	12.71
SS-PF7	8	PVC - SDR 26	66.34	0.56	14.38	14.01
SS-PG1	8	PVC - SDR 26	261.80	0.48	7.92	6.67
SS-PG2	8	PVC - SDR 26	172.83	0.48	8.80	7.97
SS-PH1	8	PVC - SDR 26	305.00	1.99	7.52	1.45
SS-PH2	8	PVC - SDR 26	227.43	0.40	8.48	7.57
SS-PI1	8	PVC - SDR 26	265.47	0.30	5.02	4.22
SS-PI2	8	PVC - SDR 26	211.20	0.30	5.70	5.07
SS-PI3	8	PVC - SDR 26	151.22	0.30	6.20	5.75
SS-PI4	8	PVC - SDR 26	168.44	0.40	6.92	6.25

NOTES:

1. THE SANITARY SEWER AND FORCE MAIN SHALL CONFORM TO THE ARTESIAN WASTEWATER MANAGEMENT, INC. STANDARDS AND SPECIFICATIONS AND COMPLY WITH ALL LOCAL, STATE, AND FEDERAL REGULATIONS.
2. ARTESIAN WASTEWATER MANAGEMENT, INC. WILL OWN, OPERATE, AND MAINTAIN THE ON-SITE COMMUNITY WASTEWATER SYSTEM. THE ON-SITE COMMUNITY WASTEWATER PLAN WILL BE OPERATED UNDER THE PUBLIC SERVICE COMMISSION.
3. AN AGREEMENT FOR OPERATION AND MAINTENANCE OF THE ON-SITE COMMUNITY WASTEWATER SYSTEM MUST BE MAINTAINED IN ACCORDANCE WITH DNREC REQUIREMENTS.
4. TOTAL NUMBER OF LATERALS ASSOCIATED WITH THESE PLANS IS 250 (INCLUDING CLUBHOUSE).
5. ALL PVC GRAVITY-FED SANITARY SEWER PIPES SHALL BE GREEN SDR-26 UNLESS OTHERWISE NOTED.
6. ALL FORCE MAIN SHALL BE GREEN PVC C900.
7. CONTRACTOR TO COORDINATE CONSTRUCTION SEQUENCING WITH ARTESIAN TO AVOID SERVICE INTERRUPTIONS AS PRACTICABLE.
8. POOL BACKWASH WILL NOT BE ALLOWED TO TIE-IN TO SEWER SYSTEM. CARTRIDGE SYSTEM SHALL BE UTILIZED.

DESIGN FLOW	
SINGLE FAMILY LOTS + AMENITIES (249) (2)	251 EDU
TOTAL	251 EDU

DESIGN FLOW

The pump station will serve 249 on-site residential units, 1 onsite club house.

BASE FLOW:
240 GAL/EDU/DAY x 251 EDU = 60,240 GPD

PEAKING FACTOR = 3.75

PEAK FLOW = 60,240 GPD x 3.75 = 225,900 GPD → 157 GPM = DESIGN FLOW

solutions
Integrated Planning
Engineering & Management, LLC

303 North Bedford Street
Georgetown, DE 19947
T. 302.297.9215

3003 Merritt Mill Road
Salisbury, MD 21804
T. 410.572.8833

www.solutionsipem.com

Copyright © 2023

JAMES R. ERIKSEN LICENSE DELAWARE PROFESSIONAL ENGINEER

Date 07/01/2024

REVISIONS

NO.	DATE	DESCRIPTION
1	5/23/24	PLANS REVISED PER AGENCIES COMMENTS.
2	6/28/24	PLANS REVISED PER AGENCIES COMMENTS.
3	7/1/24	PLANS REVISED PER ARTESIAN COMMENTS.

SANITARY SEWER INDEX
for
TWIN MASTS
SUSSEX COUNTY, DELAWARE
Prepared for: Twin Masts, LLC

Date:	3/12/24
Job Number:	G21029
Scale:	N.T.S.
Drawn By:	JPR
Designed By:	JPR
Approved By:	JRE

Sheet No.: 34

File Name: G21029-Sewer-Index

solutions

303 North Bedford Street
Georgetown, DE 19947
T. 302.297.9215

3003 Merritt Mill Road
Salisbury, MD 21804
T. 410.572.8833

www.solutionsipem.com Copyright © 2023

JAMES R. ERIKSEN
LICENSE
DELAWARE
PROFESSIONAL ENGINEER

Date 07/01/2024

REVISIONS

NO.	DATE	DESCRIPTION
1	5/23/24	PLANS REVISED PER AGENCIES COMMENTS.
2	6/28/24	PLANS REVISED PER AGENCIES COMMENTS.
3	7/1/24	PLANS REVISED PER ARTESIAN COMMENTS.

SANITARY SEWER PLAN A

for

TWIN MASTS

SUSSEX COUNTY, DELAWARE

Prepared for: Twin Masts, LLC

Date:	3/12/24
Job Number:	G21029
Scale:	AS NOTED
Drawn By:	JPR
Designed By:	JPR
Approved By:	JRE

Sheet No.: 35

File Name: G21029-Sewer

N

NOTE:
1. CONTRACTOR TO VERIFY DEPTH AND LOCATION OF ALL UTILITIES AT CONNECTIONS PRIOR TO INSTALLATION.
2. CLEANOUTS SHOULD NOT BE LOCATED IN DRIVEWAYS.

GRAPHIC SCALE

50 0 25 50 100 200

(IN FEET)
1 inch = 50 ft.

solutions

303 North Bedford Street
Georgetown, DE 19947
T. 302.297.9215

3003 Merritt Mill Road
Salisbury, MD 21804
T. 410.572.8833

www.solutionsipem.com

Copyright © 2023

JAMES R. ERIKSEN
LICENSE
DELAWARE
PROFESSIONAL ENGINEER

Date 07/01/2024

REVISIONS

NO.	DATE	DESCRIPTION
1	5/23/24	PLANS REVISED PER AGENCIES COMMENTS.
2	6/28/24	PLANS REVISED PER AGENCIES COMMENTS.
3	7/1/24	PLANS REVISED PER ARTESIAN COMMENTS.

SANITARY SEWER PLAN B

for

TWIN MASTS

SUSSEX COUNTY, DELAWARE
Prepared for: Twin Masts, LLC

Date:	3/12/24
Job Number:	G21029
Scale:	AS NOTED
Drawn By:	JPR
Designed By:	JPR
Approved By:	JRE

Sheet No.: 36

File Name: G21029-Sewer

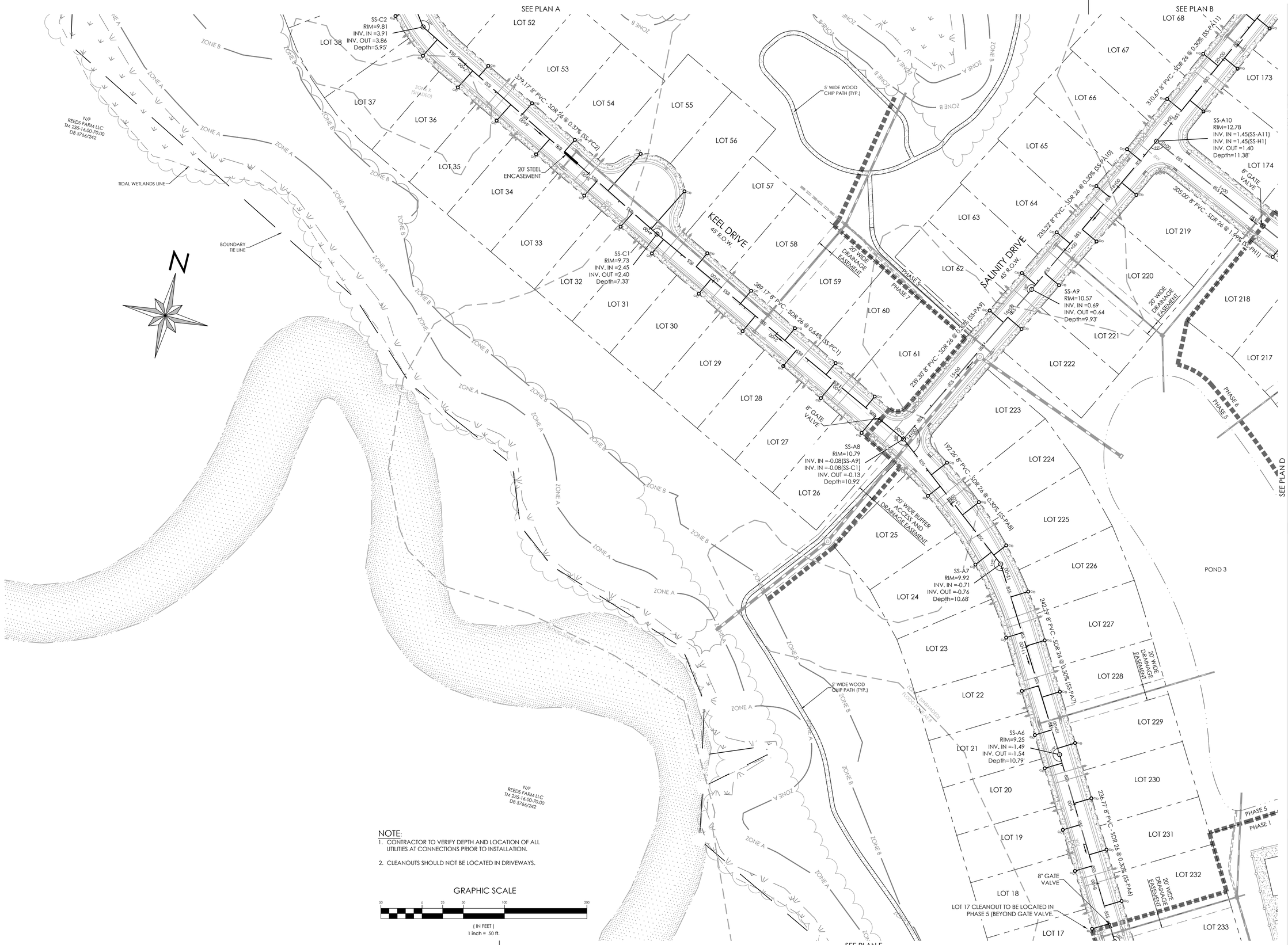

NOTE:

1. CONTRACTOR TO VERIFY DEPTH AND LOCATION OF ALL UTILITIES AT CONNECTIONS PRIOR TO INSTALLATION.
2. CLEANOUTS SHOULD NOT BE LOCATED IN DRIVEWAYS.

GRAPHIC SCALE

50 0 25 50 100 200

(IN FEET)
1 inch = 50 ft.

solutions

303 North Bedford Street
Georgetown, DE 19947
T. 302.297.9215

3003 Merritt Mill Road
Salisbury, MD 21804
T. 410.572.8833

www.solutionsipem.com
Copyright © 2023

JAMES R. ERIKSEN
LICENSE
DELAWARE
PROFESSIONAL ENGINEER

Date 07/01/2024

REVISIONS

NO.	DATE	DESCRIPTION
1	5/23/24	PLANS REVISED PER AGENCIES COMMENTS.
2	6/28/24	PLANS REVISED PER AGENCIES COMMENTS.
3	7/1/24	PLANS REVISED PER ARTESIAN COMMENTS.

SANITARY SEWER PLAN C

for

TWIN MASTS

SUSSEX COUNTY, DELAWARE

Prepared for: Twin Masts, LLC

Date:	3/12/24
Job Number:	G21029
Scale:	AS NOTED
Drawn By:	JPR
Designed By:	JPR
Approved By:	JRE

Sheet No.: 37

File Name: G21029-Sewer

NOTE:

1. CONTRACTOR TO VERIFY DEPTH AND LOCATION OF ALL UTILITIES AT CONNECTIONS PRIOR TO INSTALLATION.
2. CLEANOUTS SHOULD NOT BE LOCATED IN DRIVEWAYS.

GRAPHIC SCALE

50 0 25 50 100 200

(IN FEET)
1 inch = 50 ft.

N

solutions

303 North Bedford Street
Georgetown, DE 19947
T. 302.297.9215

3003 Merritt Mill Road
Salisbury, MD 21804
T. 410.572.8833

www.solutionsipem.com
Copyright © 2023

JAMES A. ERIKSEN LICENSE No. 22000 STATE OF DELAWARE PROFESSIONAL ENGINEER

Date 07/01/2024

REVISIONS

NO.	DATE	DESCRIPTION
1	5/23/24	PLANS REVISED PER AGENCIES COMMENTS.
2	6/28/24	PLANS REVISED PER AGENCIES COMMENTS.
3	7/1/24	PLANS REVISED PER ARTESIAN COMMENTS.

SANITARY SEWER PLAN D

for

TWIN MASTS

SUSSEX COUNTY, DELAWARE
Prepared for: Twin Masts, LLC

Date:	3/12/24
Job Number:	G21029
Scale:	AS NOTED
Drawn By:	JPR
Designed By:	JPR
Approved By:	JRE

Sheet No.: 38

File Name: G21029-Sewer

NOTE:

1. CONTRACTOR TO VERIFY DEPTH AND LOCATION OF ALL UTILITIES AT CONNECTIONS PRIOR TO INSTALLATION.
2. CLEANOUTS SHOULD NOT BE LOCATED IN DRIVEWAYS.

GRAPHIC SCALE

50 0 25 50 100 200

(IN FEET)
1 inch = 50 ft.

solutions

303 North Bedford Street
Georgetown, DE 19947
T. 302.297.9215

3003 Merritt Mill Road
Salisbury, MD 21804
T. 410.572.8833

www.solutionsipem.com Copyright © 2023

JAMES R. ERIKSEN
LICENSE
DELAWARE
PROFESSIONAL ENGINEER

Date 07/01/2024

REVISIONS

NO.	DATE	DESCRIPTION
1	5/23/24	PLANS REVISED PER AGENCIES COMMENTS.
2	6/28/24	PLANS REVISED PER AGENCIES COMMENTS.
3	7/1/24	PLANS REVISED PER ARTESIAN COMMENTS.

SANITARY SEWER PLAN E

for

TWIN MASTS

SUSSEX COUNTY, DELAWARE
Prepared for: Twin Masts, LLC

Date:	3/12/24
Job Number:	G21029
Scale:	AS NOTED
Drawn By:	JPR
Designed By:	JPR
Approved By:	JRE

Sheet No.: 39

File Name: G21029-Sewer

NOTE:
1. CONTRACTOR TO VERIFY DEPTH AND LOCATION OF ALL UTILITIES AT CONNECTIONS PRIOR TO INSTALLATION.
2. CLEANOUTS SHOULD NOT BE LOCATED IN DRIVEWAYS.

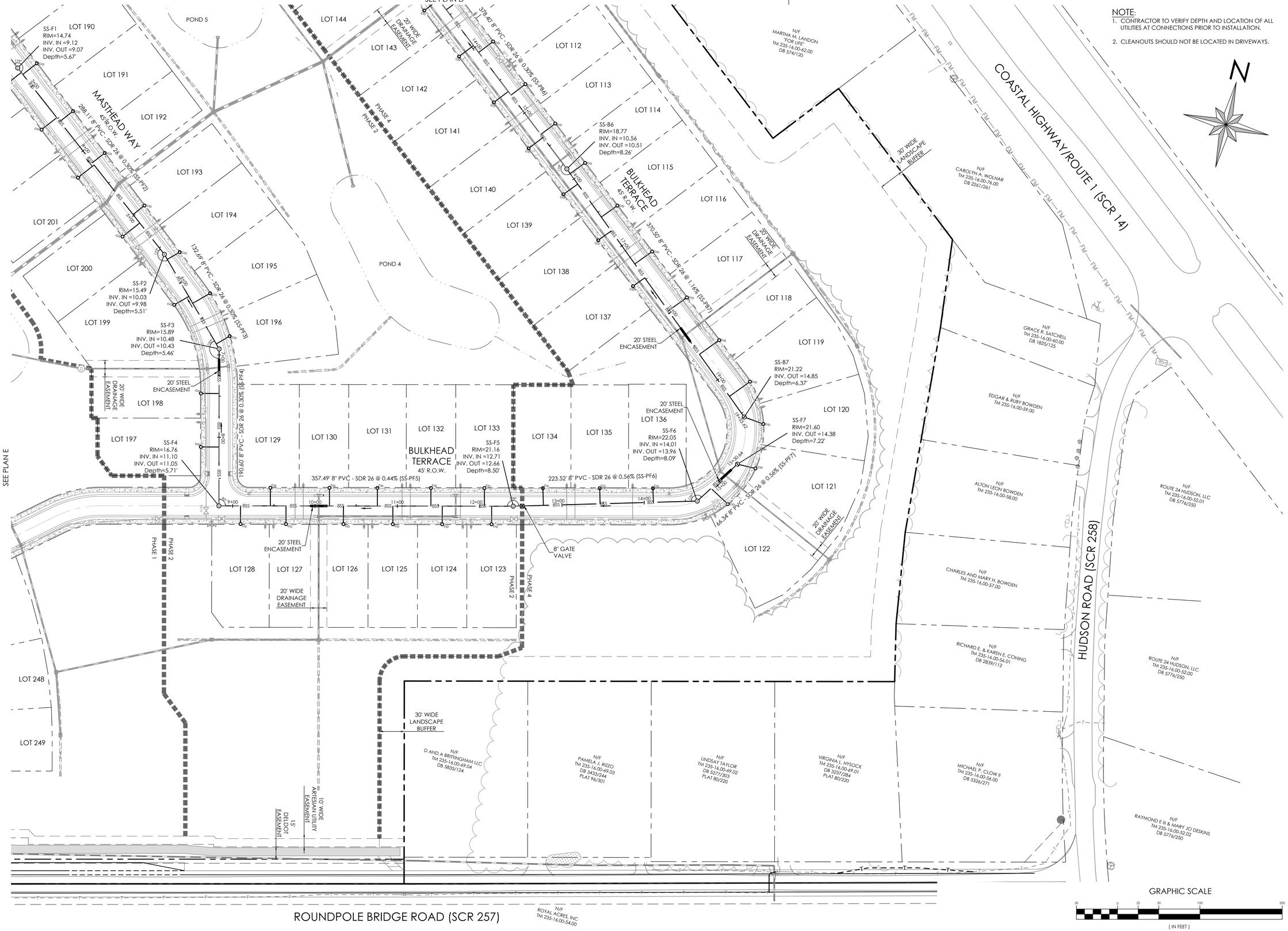

solutions

303 North Bedford Street
Georgetown, DE 19947
T. 302.297.9215

3003 Merritt Mill Road
Salisbury, MD 21804
T. 410.572.8833

www.solutionsipem.com

Copyright © 2023

JAMES R. ERIKSEN LICENSE PROFESSIONAL ENGINEER

Date 07/01/2024

REVISIONS

NO.	DATE	DESCRIPTION
1	5/23/24	PLANS REVISED PER AGENCIES COMMENTS.
2	6/28/24	PLANS REVISED PER AGENCIES COMMENTS.
3	7/1/24	PLANS REVISED PER ARTESIAN COMMENTS.

SANITARY SEWER PLAN F

for

TWIN MASTS

SUSSEX COUNTY, DELAWARE

Prepared for: Twin Masts, LLC

Date:	3/12/24
Job Number:	G21029
Scale:	AS NOTED
Drawn By:	JPR
Designed By:	JPR
Approved By:	JRE

Sheet No.: 40

File Name: G21029-Sewer

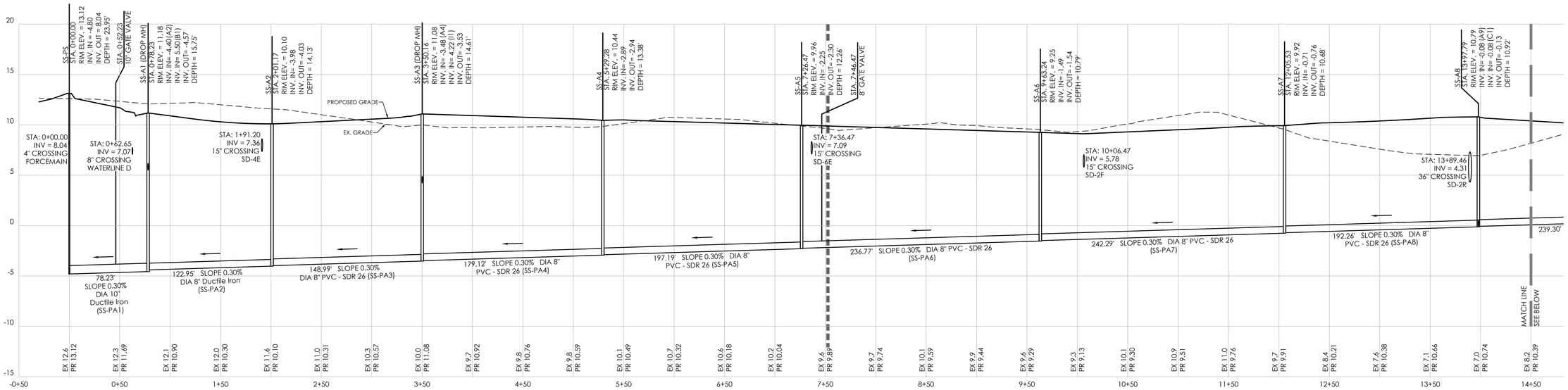

SS-PS-1 TO SS-A15

HORIZONTAL: 1"=50'
VERTICAL: 1"=5'

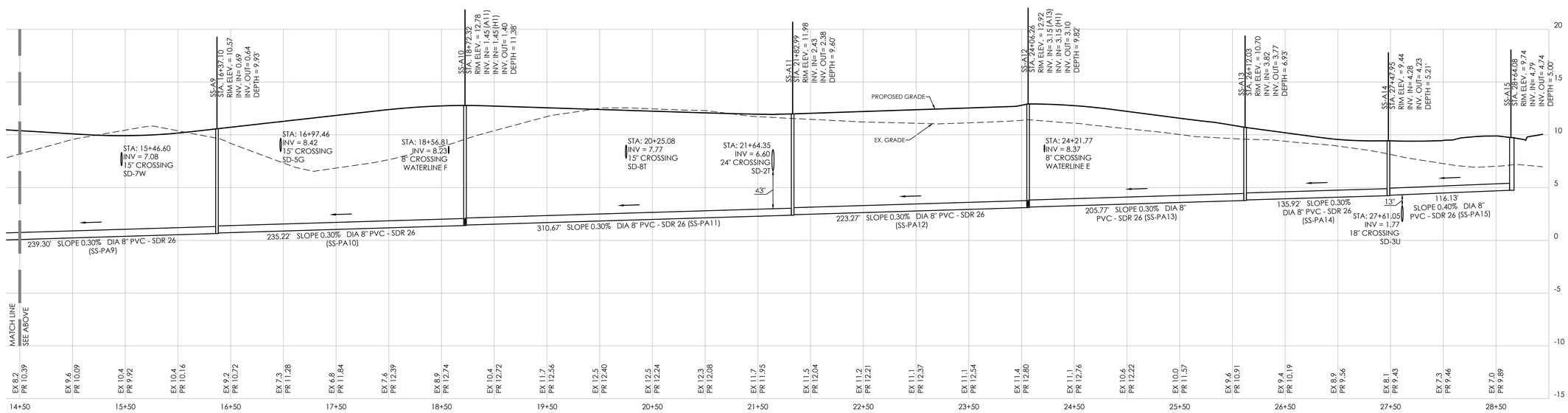

SS-PS-1 TO SS-A15 (CONTINUED)

HORIZONTAL: 1"=50'
VERTICAL: 1"=5'

NOTES:

- ALL PVC GRAVITY-FED SANITARY SEWER PIPE SHALL BE GREEN SDR 26 PVC UNLESS OTHERWISE NOTED
- ALL FORCE MAINS SHALL BE GREEN C900 PVC
- SEWERS CROSSING WATER MAINS SHALL BE LAID OUT TO PROVIDE A MINIMUM VERTICAL DISTANCE OF 18" BETWEEN THE OUTSIDE OF THE WATER MAIN AND THE OUTSIDE OF THE SEWER. THE CROSSING SHALL BE ARRANGED SO THE SEWER JOINTS WILL BE EQUIDISTANT, AND AS FAR AS POSSIBLE FROM THE WATER MAIN JOINTS. CONCRETE ENCASEMENT SHALL BE REQUIRED WHEN IT IS IMPOSSIBLE TO OBTAIN PROPER SEPARATION.
- ADEQUATE STRUCTURAL SUPPORT SHALL BE PROVIDED FOR THE SEWER TO PREVENT DAMAGE TO THE SEWER PIPE. WHEN IT IS IMPOSSIBLE TO OBTAIN PROPER SEPARATION CONCRETE ENCASEMENT SHALL BE REQUIRED TO BE INSTALLED IN MINIMUM OF 5' ON EITHER SIDE OF THE CROSSING POINT ON THE LOWEST UTILITY.

solutions

303 North Bedford Street
Georgetown, DE 19947
T. 302.297.9215

3003 Merritt Mill Road
Salisbury, MD 21804
T. 410.572.8833

www.solutionsipem.com Copyright © 2023

JAMES R. ERIKSEN LICENSE No. 22024 PROFESSIONAL ENGINEER

Date 07/01/2024

REVISIONS

NO.	DATE	DESCRIPTION
1	5/23/24	PLANS REVISED PER AGENCIES COMMENTS.
2	6/28/24	PLANS REVISED PER AGENCIES COMMENTS.
3	7/11/24	PLANS REVISED PER ARTESIAN COMMENTS.

SANITARY SEWER PROFILE 1

for

TWIN MASTS

SUSSEX COUNTY, DELAWARE
Prepared for: Twin Masts, LLC

Date:	3/12/24
Job Number:	G21029
Scale:	AS NOTED
Drawn By:	JPR
Designed By:	JPR
Approved By:	JRE

Sheet No.: 41

File Name: G21029-Sewer-Profiles

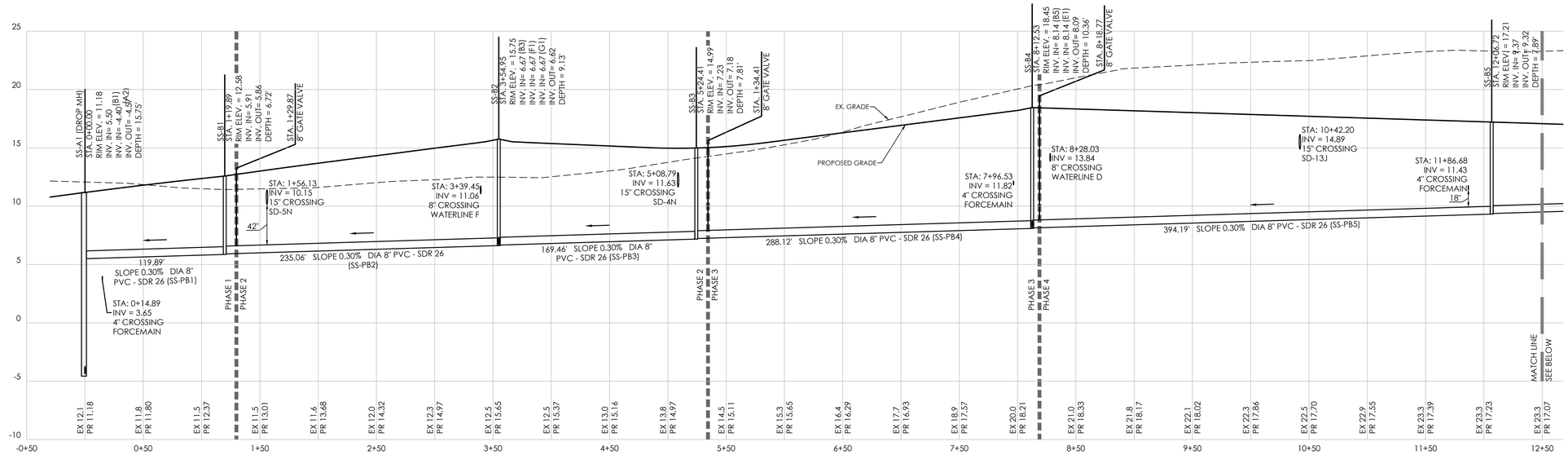

SS-A1 TO SS-B7

HORIZONTAL: 1"=50'
VERTICAL: 1"=5'

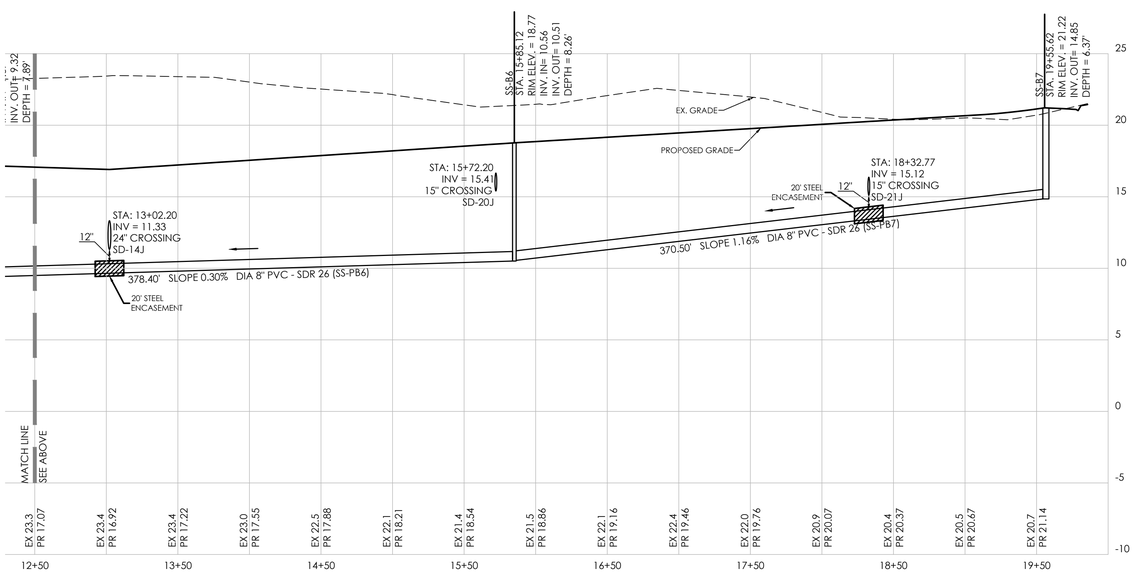

SS-A1 TO SS-B7 (CONTINUED)

HORIZONTAL: 1"=50'
VERTICAL: 1"=5'

NOTES:

- ALL PVC GRAVITY-FED SANITARY SEWER PIPE SHALL BE GREEN SDR 26 PVC UNLESS OTHERWISE NOTED
- ALL FORCE MAINS SHALL BE GREEN C900 PVC
- SEWERS CROSSING WATER MAINS SHALL BE LAID OUT TO PROVIDE A MINIMUM VERTICAL DISTANCE OF 18" BETWEEN THE OUTSIDE OF THE WATER MAIN AND THE OUTSIDE OF THE SEWER. THE CROSSING SHALL BE ARRANGED SO THE SEWER JOINTS WILL BE EQUIDISTANT, AND AS FAR AS POSSIBLE FROM THE WATER MAIN JOINTS. CONCRETE ENCASEMENT SHALL BE REQUIRED WHEN IT IS IMPOSSIBLE TO OBTAIN PROPER SEPARATION.
- ADEQUATE STRUCTURAL SUPPORT SHALL BE PROVIDED FOR THE SEWER TO PREVENT DAMAGE TO THE SEWER PIPE. WHEN IT IS IMPOSSIBLE TO OBTAIN PROPER SEPARATION CONCRETE ENCASEMENT SHALL BE REQUIRED TO BE INSTALLED IN MINIMUM OF 5' ON EITHER SIDE OF THE CROSSING POINT ON THE LOWEST UTILITY.

solutions

303 North Bedford Street
Georgetown, DE 19947
T. 302.297.9215

3003 Merritt Mill Road
Salisbury, MD 21804
T. 410.572.8833

www.solutionsipem.com

Copyright © 2023

JAMES R. ERIKSEN LICENSE 22000 PROFESSIONAL ENGINEER

Date 07/01/2024

REVISIONS

NO.	DATE	DESCRIPTION
1	5/23/24	PLANS REVISED PER AGENCIES COMMENTS.
2	6/28/24	PLANS REVISED PER AGENCIES COMMENTS.
3	7/1/24	PLANS REVISED PER ARTESIAN COMMENTS.

SANITARY SEWER PROFILE 2

for

TWIN MASTS

SUSSEX COUNTY, DELAWARE
Prepared for: Twin Masts, LLC

Date:	3/12/24
Job Number:	G21029
Scale:	AS NOTED
Drawn By:	JPR
Designed By:	JPR
Approved By:	JRE

Sheet No.: 42

File Name: G21029-Sewer-Profiles

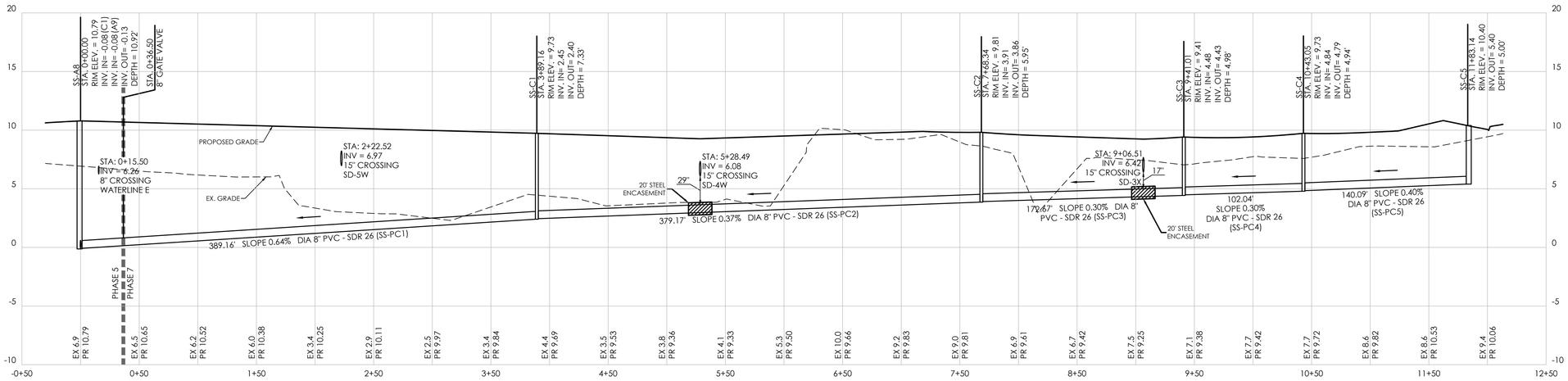

SS-A8 TO SS-C5

HORIZONTAL: 1"=50'
VERTICAL: 1"=5'

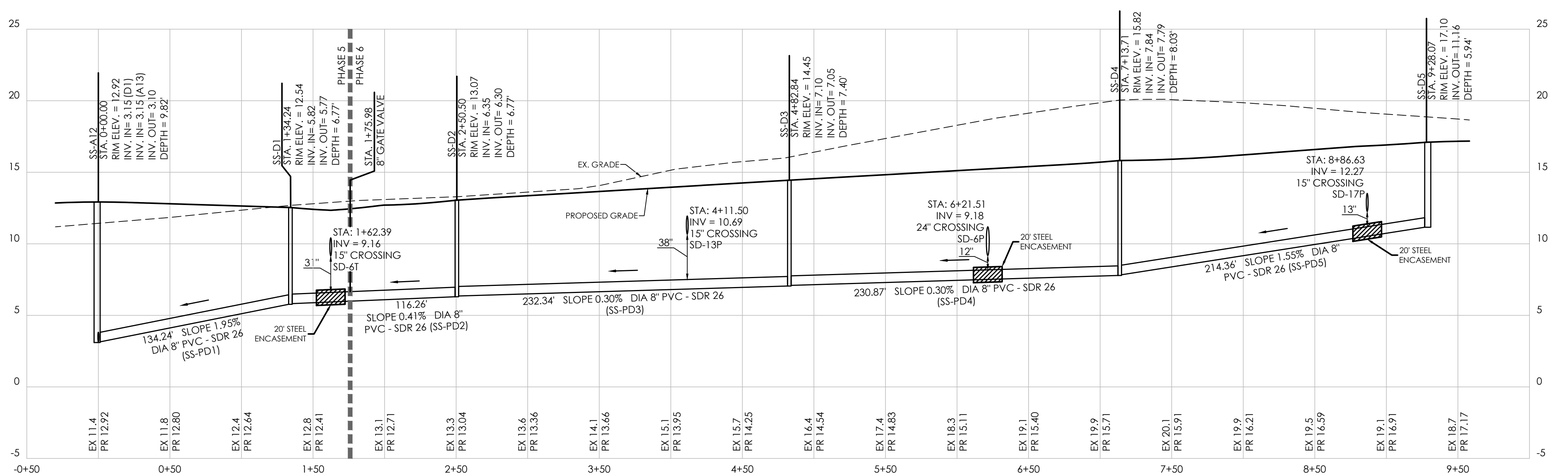

SS-A12 TO SS-D5

HORIZONTAL: 1"=50'
VERTICAL: 1"=5'

NOTES:

- ALL PVC GRAVITY-FED SANITARY SEWER PIPE SHALL BE GREEN SDR 26 PVC UNLESS OTHERWISE NOTED
- ALL FORCE MAINS SHALL BE GREEN C900 PVC
- SEWERS CROSSING WATER MAINS SHALL BE LAID OUT TO PROVIDE A MINIMUM VERTICAL DISTANCE OF 18" BETWEEN THE OUTSIDE OF THE WATER MAIN AND THE OUTSIDE OF THE SEWER. THE CROSSING SHALL BE ARRANGED SO THE SEWER JOINTS WILL BE EQUIDISTANT, AND AS FAR AS POSSIBLE FROM THE WATER MAIN JOINTS. CONCRETE ENCASEMENT SHALL BE REQUIRED WHEN IT IS IMPOSSIBLE TO OBTAIN PROPER SEPARATION.
- ADEQUATE STRUCTURAL SUPPORT SHALL BE PROVIDED FOR THE SEWER TO PREVENT DAMAGE TO THE SEWER PIPE. WHEN IT IS IMPOSSIBLE TO OBTAIN PROPER SEPARATION CONCRETE ENCASEMENT SHALL BE REQUIRED TO BE INSTALLED IN MINIMUM OF 5' ON EITHER SIDE OF THE CROSSING POINT ON THE LOWEST UTILITY.

solutions

303 North Bedford Street
Georgetown, DE 19947
T. 302.297.9215

3003 Merritt Mill Road
Salisbury, MD 21804
T. 410.572.8833

www.solutionsipem.com
Copyright © 2023

JAMES R. ERIKSEN LICENSE 22000 DELAWARE PROFESSIONAL ENGINEER

Date 07/01/2024

REVISIONS

NO.	DATE	DESCRIPTION
1	5/23/24	PLANS REVISED PER AGENCIES COMMENTS.
2	6/28/24	PLANS REVISED PER AGENCIES COMMENTS.
3	7/1/24	PLANS REVISED PER ARTESIAN COMMENTS.

SANITARY SEWER PROFILE 3

for

TWIN MASTS

SUSSEX COUNTY, DELAWARE
Prepared for: Twin Masts, LLC

Date:	3/12/24
Job Number:	G21029
Scale:	AS NOTED
Drawn By:	JPR
Designed By:	JPR
Approved By:	JRE

Sheet No.: 43

File Name: G21029-Sewer-Profiles

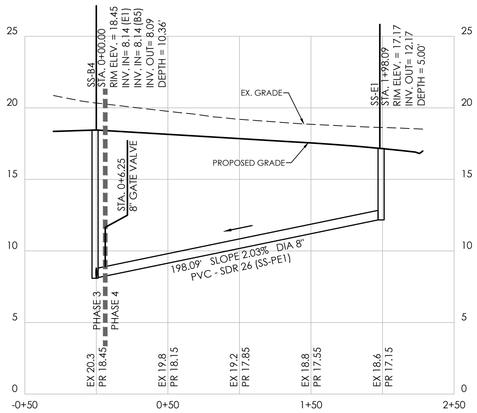

SS-B4 TO SS-E1

HORIZONTAL: 1"=50'
VERTICAL: 1"=5'

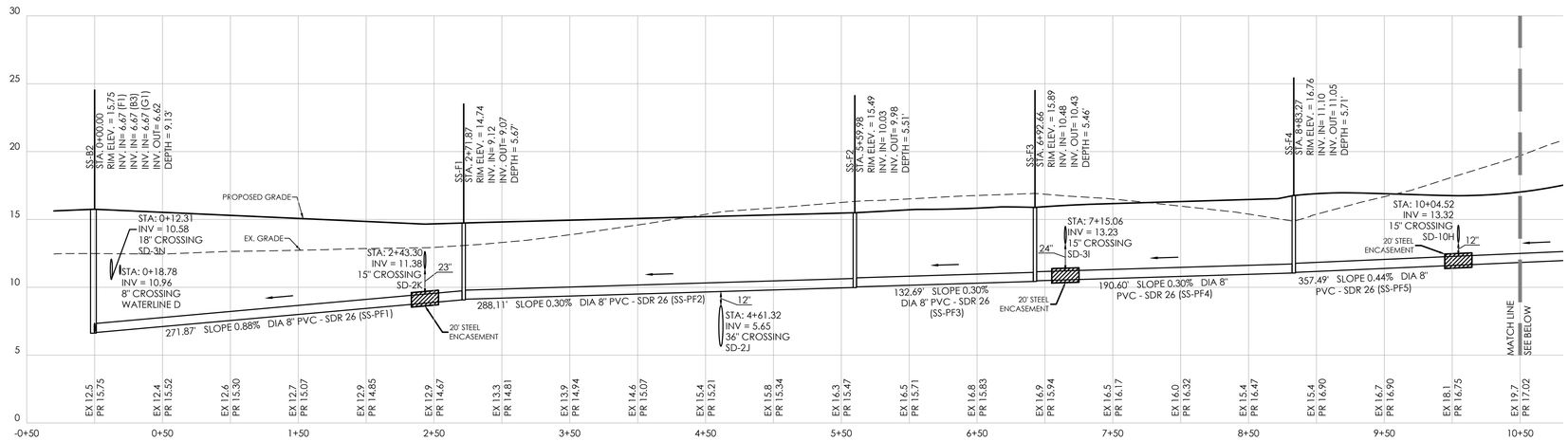

SS-B2 TO SS-F7

HORIZONTAL: 1"=50'
VERTICAL: 1"=5'

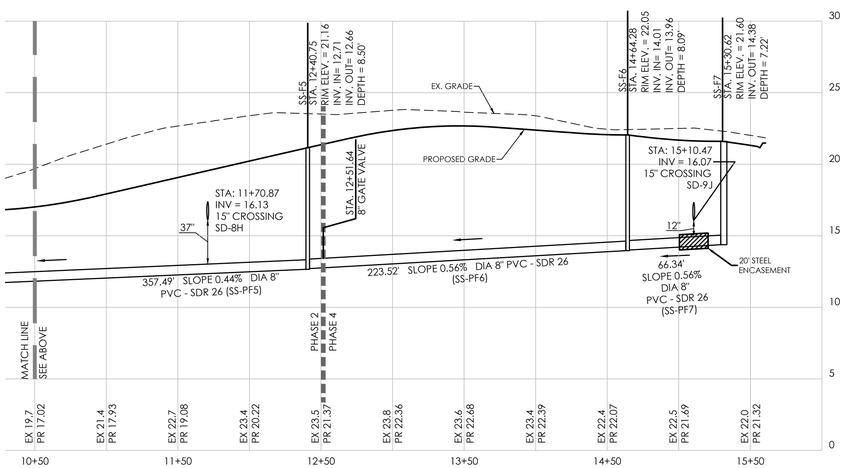

SS-B2 TO SS-F7 (CONTINUED)

HORIZONTAL: 1"=50'
VERTICAL: 1"=5'

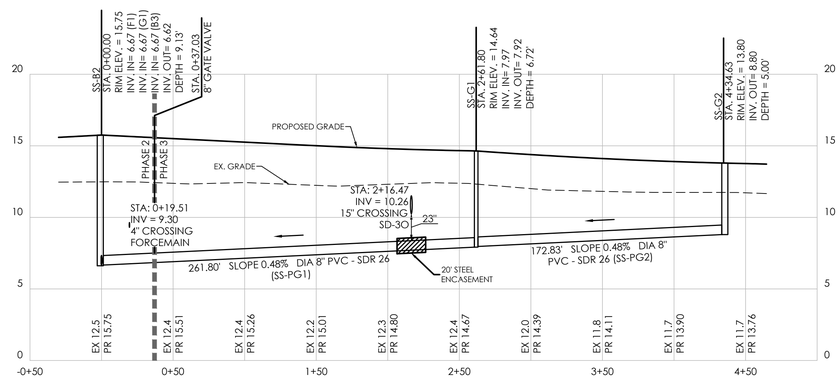

SS-B2 TO SS-G2

HORIZONTAL: 1"=50'
VERTICAL: 1"=5'

NOTES:

- ALL PVC GRAVITY-FED SANITARY SEWER PIPE SHALL BE GREEN SDR 26 PVC UNLESS OTHERWISE NOTED
- ALL FORCE MAINS SHALL BE GREEN C900 PVC
- SEWERS CROSSING WATER MAINS SHALL BE LAID OUT TO PROVIDE A MINIMUM VERTICAL DISTANCE OF 18" BETWEEN THE OUTSIDE OF THE WATER MAIN AND THE OUTSIDE OF THE SEWER. THE CROSSING SHALL BE ARRANGED SO THE SEWER JOINTS WILL BE EQUIDISTANT, AND AS FAR AS POSSIBLE FROM THE WATER MAIN JOINTS. CONCRETE ENCASEMENT SHALL BE REQUIRED WHEN IT IS IMPOSSIBLE TO OBTAIN PROPER SEPARATION.
- ADEQUATE STRUCTURAL SUPPORT SHALL BE PROVIDED FOR THE SEWER TO PREVENT DAMAGE TO THE SEWER PIPE. WHEN IT IS IMPOSSIBLE TO OBTAIN PROPER SEPARATION CONCRETE ENCASEMENT SHALL BE REQUIRED TO BE INSTALLED IN MINIMUM OF 5' ON EITHER SIDE OF THE CROSSING POINT ON THE LOWEST UTILITY.

solutions

303 North Bedford Street
Georgetown, DE 19947
T. 302.297.9215

3003 Merritt Mill Road
Salisbury, MD 21804
T. 410.572.8833

www.solutionsipem.com

Copyright © 2023

JAMES R. ERIKSEN LICENSE 22000 PROFESSIONAL ENGINEER

Date 07/01/2024

REVISIONS

NO.	DATE	DESCRIPTION
1	5/23/24	PLANS REVISED PER AGENCIES COMMENTS.
2	6/28/24	PLANS REVISED PER AGENCIES COMMENTS.
3	7/1/24	PLANS REVISED PER ARTESIAN COMMENTS.

SANITARY SEWER PROFILE 4

for

TWIN MASTS

SUSSEX COUNTY, DELAWARE
Prepared for: Twin Masts, LLC

Date:	3/12/24
Job Number:	G21029
Scale:	AS NOTED
Drawn By:	JPR
Designed By:	JPR
Approved By:	JRE

Sheet No.: 44

File Name: G21029-Sewer-Profiles

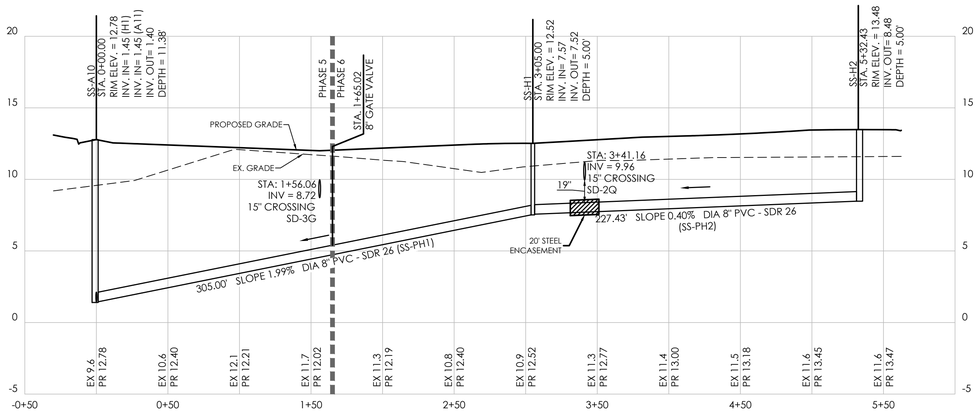

SS-SS-A10 TO SS-H2

HORIZONTAL: 1"=50'
VERTICAL: 1"=5'

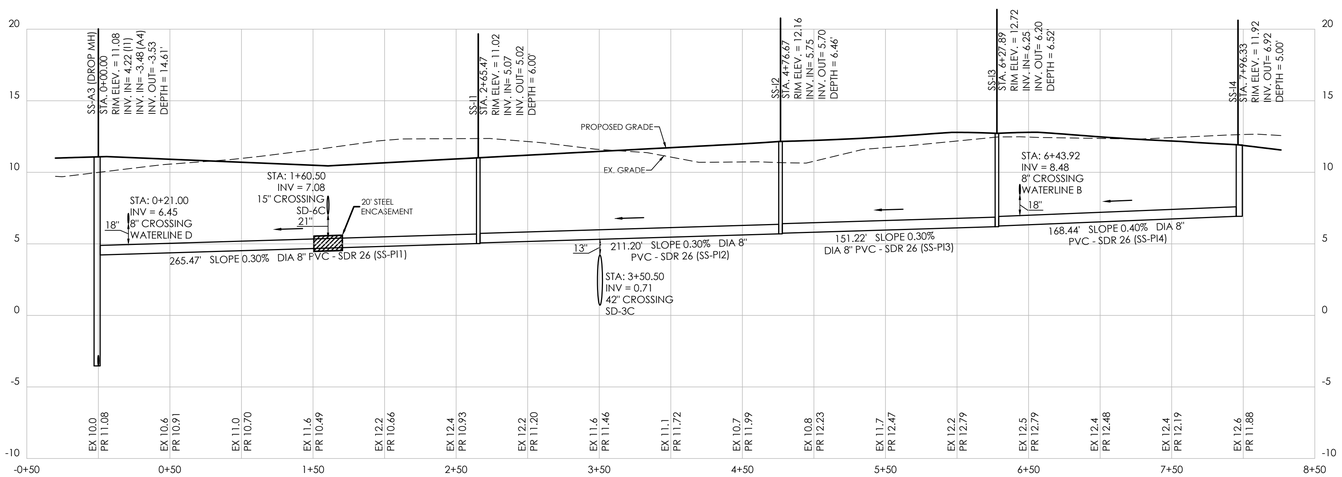

SS-A3 TO SS-I4

HORIZONTAL: 1"=50'
VERTICAL: 1"=5'

NOTES:

- ALL PVC GRAVITY-FED SANITARY SEWER PIPE SHALL BE GREEN SDR 26 PVC UNLESS OTHERWISE NOTED
- ALL FORCE MAINS SHALL BE GREEN C900 PVC
- SEWERS CROSSING WATER MAINS SHALL BE LAID OUT TO PROVIDE A MINIMUM VERTICAL DISTANCE OF 18" BETWEEN THE OUTSIDE OF THE WATER MAIN AND THE OUTSIDE OF THE SEWER. THE CROSSING SHALL BE ARRANGED SO THE SEWER JOINTS WILL BE EQUIDISTANT, AND AS FAR AS POSSIBLE FROM THE WATER MAIN JOINTS. CONCRETE ENCASEMENT SHALL BE REQUIRED WHEN IT IS IMPOSSIBLE TO OBTAIN PROPER SEPARATION.
- ADEQUATE STRUCTURAL SUPPORT SHALL BE PROVIDED FOR THE SEWER TO PREVENT DAMAGE TO THE SEWER PIPE. WHEN IT IS IMPOSSIBLE TO OBTAIN PROPER SEPARATION CONCRETE ENCASEMENT SHALL BE REQUIRED TO BE INSTALLED IN MINIMUM OF 5' ON EITHER SIDE OF THE CROSSING POINT ON THE LOWEST UTILITY.

solutions

303 North Bedford Street
Georgetown, DE 19947
T. 302.297.9215

3003 Merritt Mill Road
Salisbury, MD 21804
T. 410.572.8833

www.solutionsipem.com
Copyright © 2023

JAMES R. ERIKSEN
LICENSE
DELAWARE
PROFESSIONAL ENGINEER

Date 07/01/2024

REVISIONS

NO.	DATE	DESCRIPTION
1	5/23/24	PLANS REVISED PER AGENCIES COMMENTS.
2	6/28/24	PLANS REVISED PER AGENCIES COMMENTS.
3	7/1/24	PLANS REVISED PER ARTESIAN COMMENTS.

SANITARY SEWER PROFILE 5

for

TWIN MASTS

SUSSEX COUNTY, DELAWARE
Prepared for: Twin Masts, LLC

Date: 3/12/24
Job Number: G21029
Scale: AS NOTED
Drawn By: JPR
Designed By: JPR
Approved By: JRE

Sheet No.: 45

File Name: G21029-Sewer-Profiles

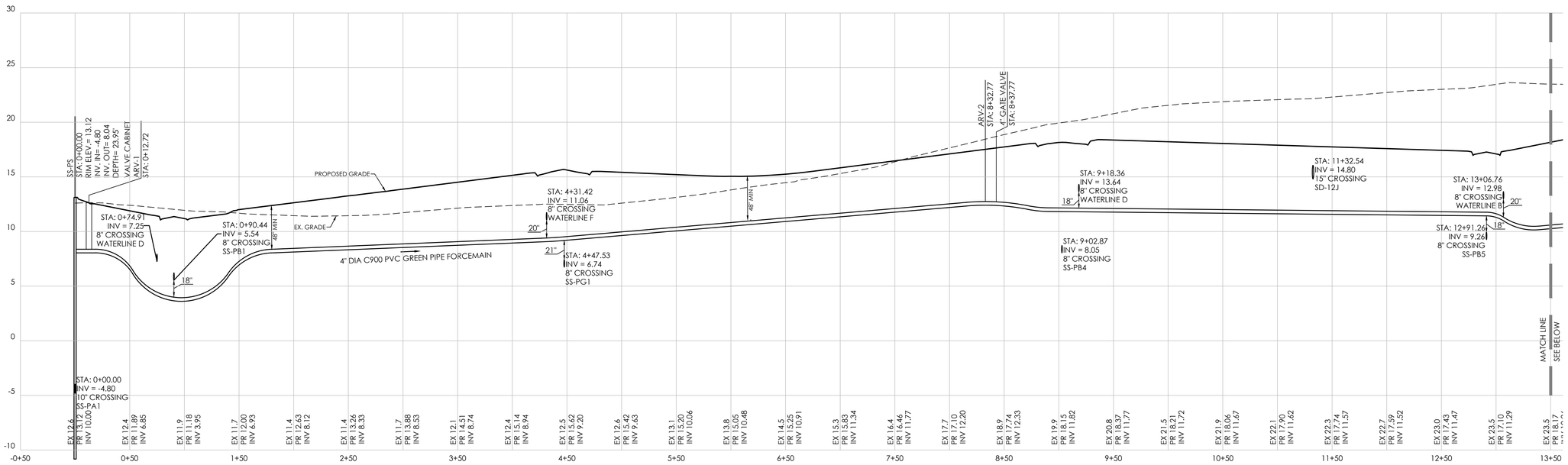

FORCEMAIN

HORIZONTAL: 1"=50'
VERTICAL: 1"=5'

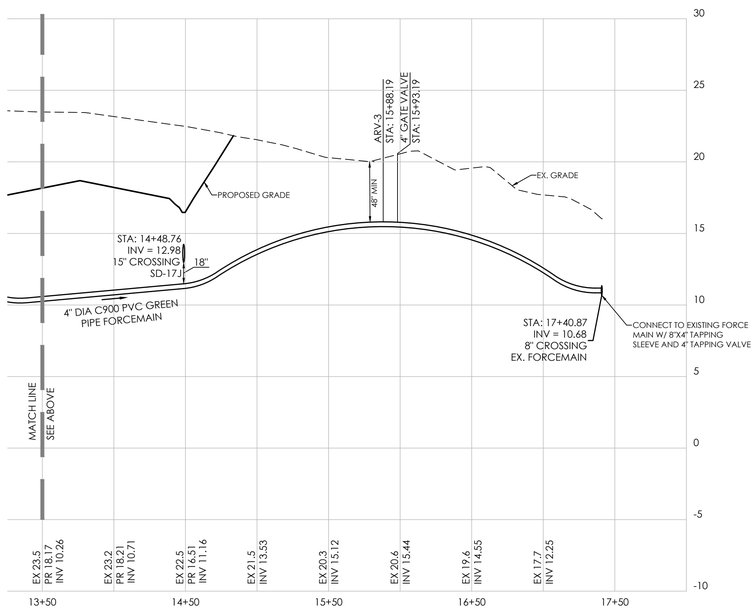

FORCEMAIN (CONTINUED)

HORIZONTAL: 1"=50'
VERTICAL: 1"=5'

NOTES:

- ALL PVC GRAVITY-FED SANITARY SEWER PIPE SHALL BE GREEN SDR 26 PVC UNLESS OTHERWISE NOTED
- ALL FORCE MAINS SHALL BE GREEN C900 PVC
- SEWERS CROSSING WATER MAINS SHALL BE LAID OUT TO PROVIDE A MINIMUM VERTICAL DISTANCE OF 18" BETWEEN THE OUTSIDE OF THE WATER MAIN AND THE OUTSIDE OF THE SEWER. THE CROSSING SHALL BE ARRANGED SO THE SEWER JOINTS WILL BE EQUIDISTANT, AND AS FAR AS POSSIBLE FROM THE WATER MAIN JOINTS. CONCRETE ENCASEMENT SHALL BE REQUIRED WHEN IT IS IMPOSSIBLE TO OBTAIN PROPER SEPARATION.
- ADEQUATE STRUCTURAL SUPPORT SHALL BE PROVIDED FOR THE SEWER TO PREVENT DAMAGE TO THE SEWER PIPE. WHEN IT IS IMPOSSIBLE TO OBTAIN PROPER SEPARATION CONCRETE ENCASEMENT SHALL BE REQUIRED TO BE INSTALLED IN MINIMUM OF 5' ON EITHER SIDE OF THE CROSSING POINT ON THE LOWEST UTILITY.

solutions
303 North Bedford Street
Georgetown, DE 19947
T. 302.297.9215
3003 Merritt Mill Road
Salisbury, MD 21804
T. 410.572.8833
www.solutionsipem.com
Copyright © 2023

JAMES R. ERIKSEN LICENSE 27011 DELAWARE PROFESSIONAL ENGINEER

Date 07/01/2024

REVISIONS

NO.	DATE	DESCRIPTION
1	5/23/24	PLANS REVISED PER AGENCIES COMMENTS.
2	6/28/24	PLANS REVISED PER AGENCIES COMMENTS.
3	7/1/24	PLANS REVISED PER ARTESIAN COMMENTS.

SANITARY SEWER PROFILE 6

for

TWIN MASTS

SUSSEX COUNTY, DELAWARE
Prepared for: Twin Masts, LLC

Date: 3/12/24
Job Number: G21029
Scale: AS NOTED
Drawn By: EDT
Designed By: JPR
Approved By: JRE

Sheet No.: 46

File Name: G21029-Sewer-Profiles

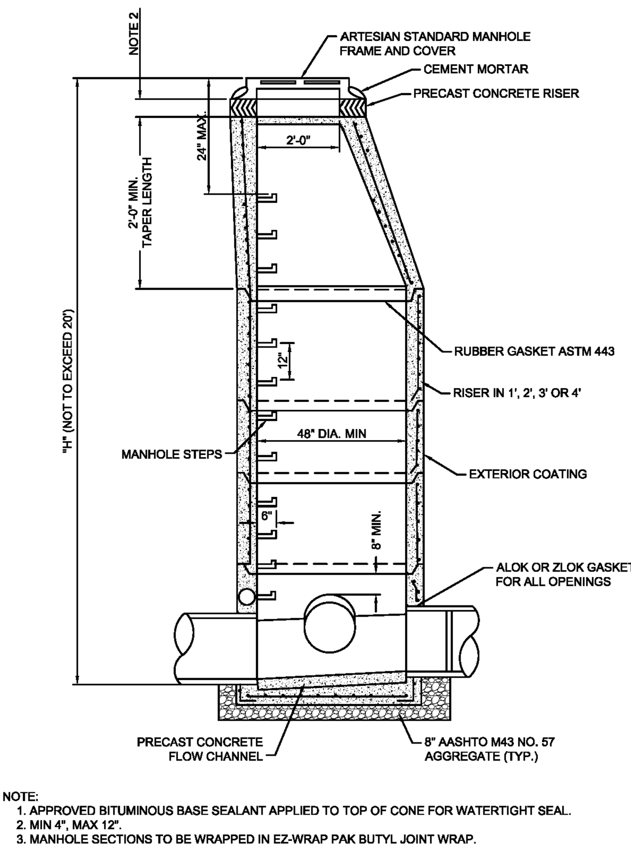

NOTE:
1. APPROVED BITUMINOUS BASE SEALANT APPLIED TO TOP OF CONE FOR WATERTIGHT SEAL.
2. MIN 4", MAX 12".
3. MANHOLE SECTIONS TO BE WRAPPED IN EZ-WRAP PAK BUTYL JOINT WRAP.

STANDARD DETAILS
PRECAST MANHOLE

664 Churchmans Road
Newark, Delaware 19702
P.O. Box 15004, Wilmington, Delaware 19850
Phone: (302) 453-6900 Fax: (302) 453-5800

ISSUED: JUNE 15, 2012	SCALE: NOT TO SCALE
REVISED: FEBRUARY 20, 2014	
REVISED:	PLATE: MH-01

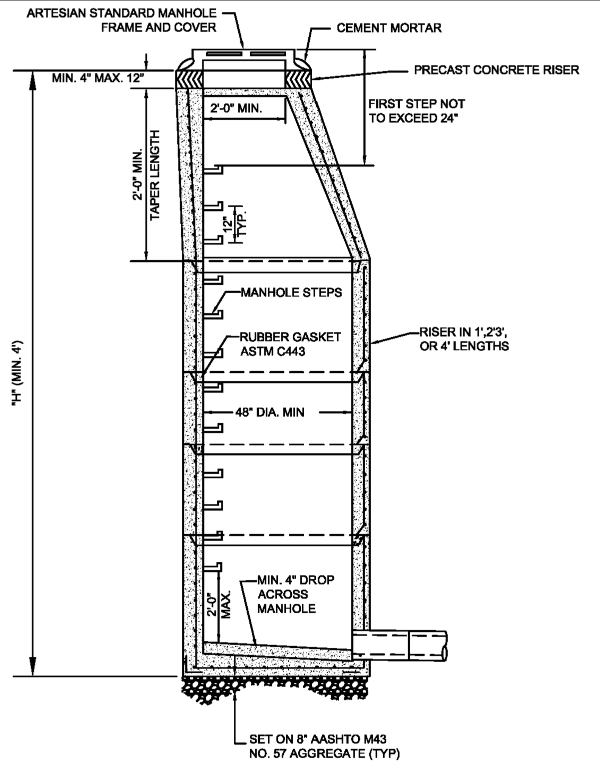

Note:
1. APPROVED BITUMINOUS BASE SEALANT APPLIED TO TOP OF CONE FOR WATERTIGHT SEAL.
2. MANHOLE SECTIONS TO BE WRAPPED IN EZ-WRAP PAK BUTYL JOINT WRAP.

STANDARD DETAILS
TERMINAL MANHOLE

664 Churchmans Road
Newark, Delaware 19702
P.O. Box 15004, Wilmington, Delaware 19850
Phone: (302) 453-6900 Fax: (302) 453-5800

ISSUED: JUNE 15, 2012	SCALE: NOT TO SCALE
REVISED: FEBRUARY 20, 2014	
REVISED:	PLATE: MH-02

STANDARD DETAILS
DEEP LATERAL
RISER & CLEANOUT - DIP

ISSUED: MAY 2, 2019	SCALE: NOT TO SCALE
REVISED:	
REVISED:	PLATE: CO-02

664 Churchmans Road
Newark, Delaware 19702
P.O. Box 15004, Wilmington, Delaware 19850
Phone: (302) 453-6900 Fax: (302) 453-5800

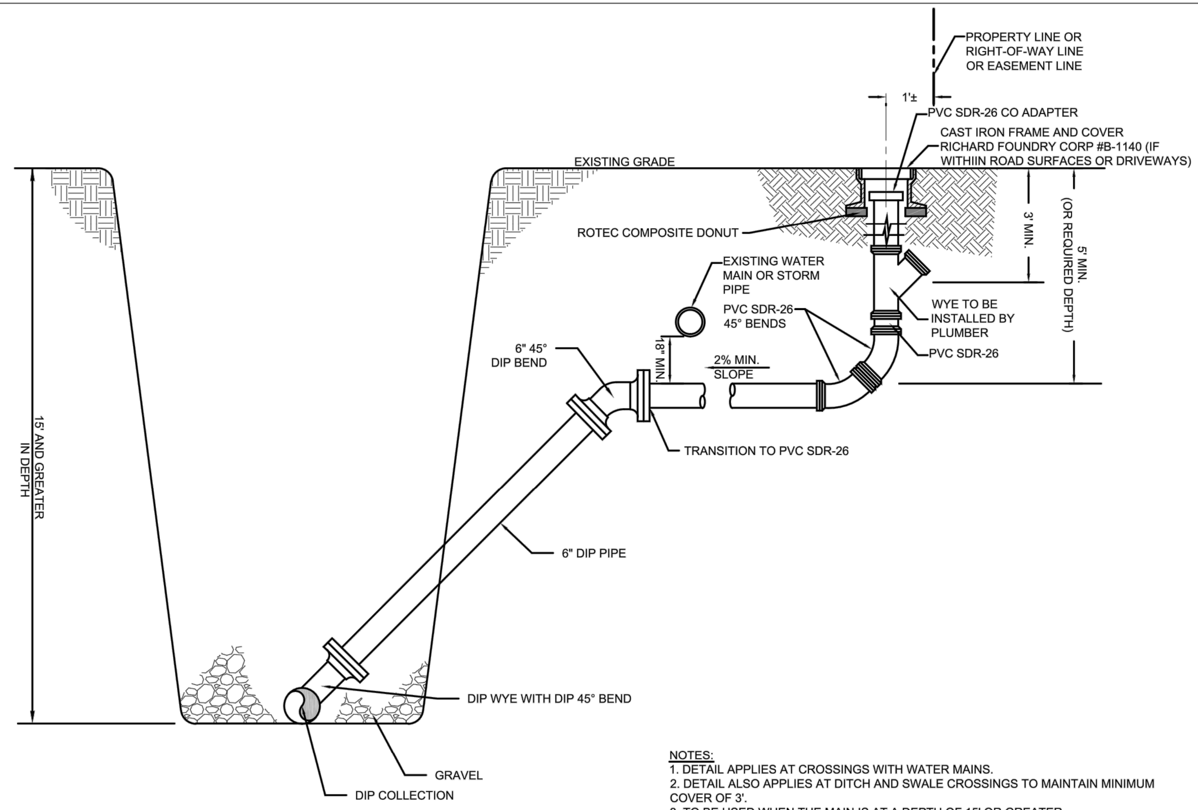

NOTES:
1. DETAIL APPLIES AT CROSSINGS WITH WATER MAINS.
2. DETAIL ALSO APPLIES AT DITCH AND SWALE CROSSINGS TO MAINTAIN MINIMUM COVER OF 3'.
3. TO BE USED WHEN THE MAIN IS AT A DEPTH OF 15' OR GREATER.
4. C.O. NOT TO BE LOCATED IN DRIVEWAYS, SIDEWALKS, DITCHES, SWALES, ETC.
5. ALL PVC FITTINGS TO BE PLASTIC TRENDS PVC SDR-26.

CONFIDENTIAL: This drawing is the property of East Jordan Iron Works, Inc. and embodies confidential information, trade secret information, and/or know how that is the property of East Jordan Iron Works, Inc. C Copyright East Jordan Iron Works, Inc.

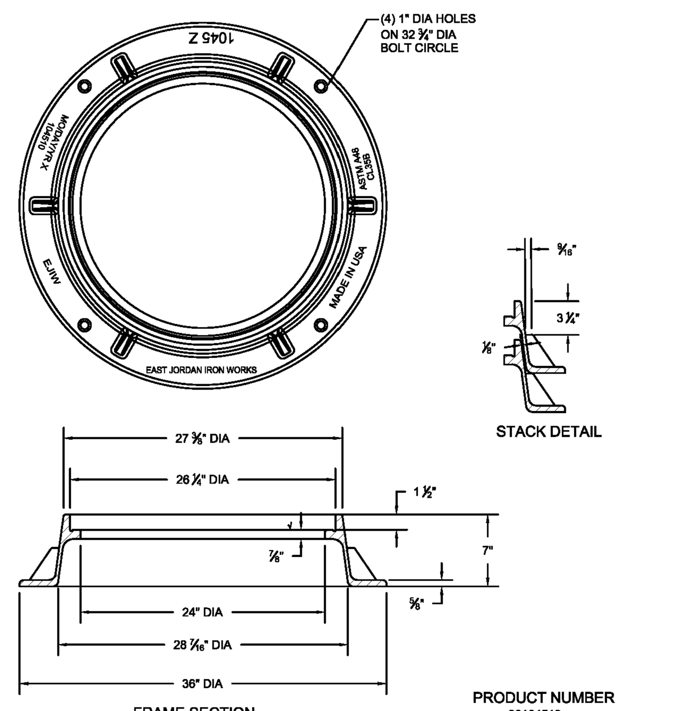

NOTES:
LOAD RATING: HEAVY DUTY
COATING: DIPPED
FRAME ESTIMATED WEIGHT: 162 LBS
FRAME MATERIAL SPECIFICATIONS: GRAY IRON ASTM A48 CL35B

PRODUCT NUMBER
00104510
CATALOG NUMBER
1045Z
REFERENCE INFORMATION
00104510.3C
00104510.3D

STANDARD DETAILS
HEAVY DUTY
MANHOLE FRAME

EJIW EAST JORDAN IRON WORKS EST.1883
800-626-4653
www.ejiw.com
MADE IN USA

664 Churchmans Road
Newark, Delaware 19702
P.O. Box 15004, Wilmington, Delaware 19850
Phone: (302) 453-6900 Fax: (302) 453-5800

ISSUED: JUNE 15, 2012	SCALE: NOT TO SCALE
REVISED: FEBRUARY 20, 2014	
REVISED:	PLATE: MH-09

CONFIDENTIAL: This drawing is the property of East Jordan Iron Works, Inc. and embodies confidential information, trade secret information, and/or know how that is the property of East Jordan Iron Works, Inc. C Copyright East Jordan Iron Works, Inc.

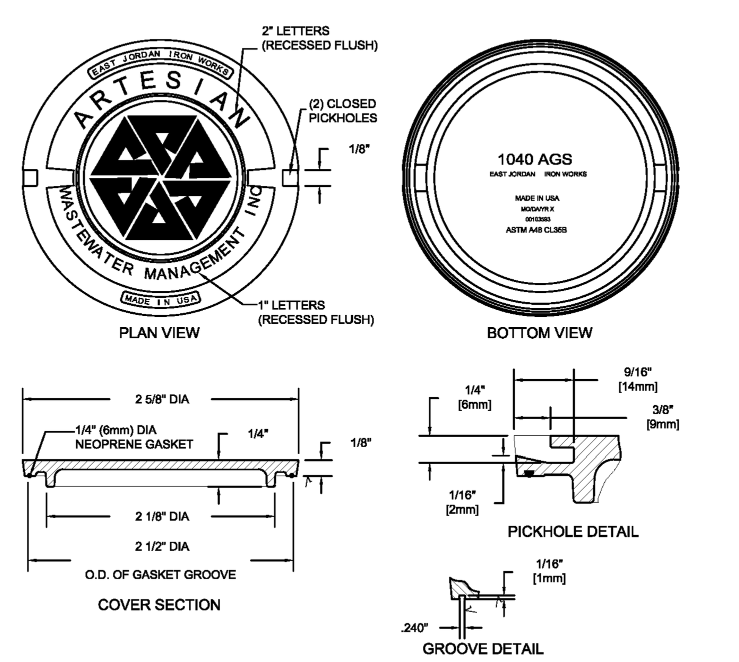

NOTES:
LOAD RATING: HEAVY DUTY
COATING: DIPPED
COVER ESTIMATED WEIGHT: 145 LBS
COVER MATERIAL SPECIFICATIONS: GRAY IRON ASTM A48 CL35B

PRODUCT NUMBER
00103593
CATALOG NUMBER
1040AGS
REFERENCE INFORMATION
00104020.1D1
00104384.15AC
00103593.LO

STANDARD DETAILS
HEAVY DUTY
MANHOLE COVER

EJIW EAST JORDAN IRON WORKS EST.1883
800-626-4653
www.ejiw.com
MADE IN USA

664 Churchmans Road
Newark, Delaware 19702
P.O. Box 15004, Wilmington, Delaware 19850
Phone: (302) 453-6900 Fax: (302) 453-5800

ISSUED: JUNE 15, 2012	SCALE: NOT TO SCALE
REVISED: FEBRUARY 20, 2014	
REVISED:	PLATE: MH-10

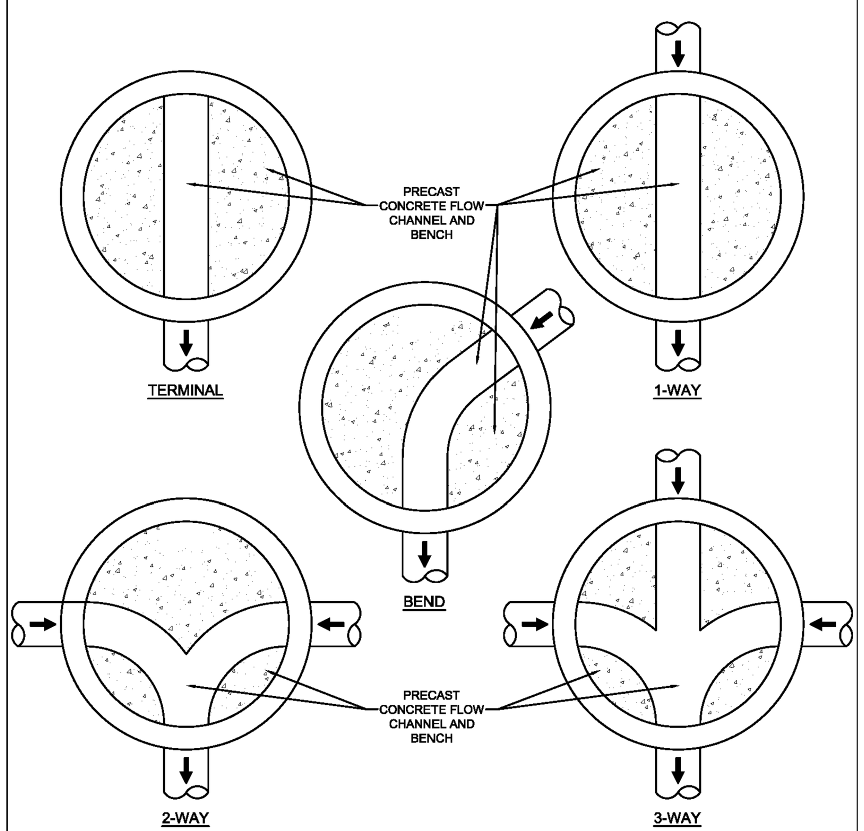

NOTE: MINIMUM 90° AT MANHOLES.

STANDARD DETAILS
TYPICAL MANHOLE
FLOW CHANNEL
PATTERNS

664 Churchmans Road
Newark, Delaware 19702
P.O. Box 15004, Wilmington, Delaware 19850
Phone: (302) 453-6900 Fax: (302) 453-5800

ISSUED: JUNE 15, 2012	SCALE: NOT TO SCALE
REVISED: FEBRUARY 20, 2014	
REVISED:	PLATE: MH-13

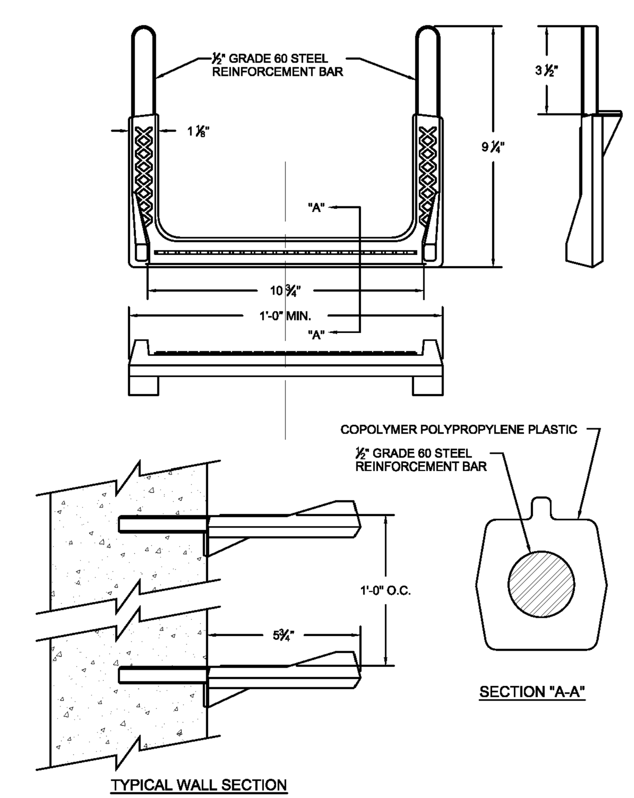

STANDARD DETAILS
SANITARY SEWER
MANHOLE STEP

664 Churchmans Road
Newark, Delaware 19702
P.O. Box 15004, Wilmington, Delaware 19850
Phone: (302) 453-6900 Fax: (302) 453-5800

ISSUED: JUNE 15, 2012	SCALE: NOT TO SCALE
REVISED: FEBRUARY 20, 2014	
REVISED:	PLATE: MH-12

MANHOLE NOTES:

1. ALL PRECAST CONCRETE MANHOLE TAPERS, RISERS, AND BASES SHALL CONFORM TO THE LATEST REVISION OF ASTM C478.
2. CONCRETE SHALL BE 4000 PSI AT 28 DAYS MINIMUM.
3. STEEL REINFORCEMENT SHALL BE GRADE 40 BILLET STEEL CONFORMING TO THE LATEST REVISION OF ASTM-A-185 FOR WALL REINFORCEMENT THE LATEST REVISION OF ASTM A615 FOR BASE REINFORCEMENT.
4. STANDARD JOINTS SHALL BE RUBBER D-RING GASKET PER ASTM-C443.
5. MANHOLE INLETS AND OUTLETS SHALL BE PRECAST WITH ALOK OR ZLOK GASKETS.
6. THE MINIMUM SEPARATION OF INVERT IN TO INVERT OUT WITHIN A MANHOLE IS 0.05 FEET. WHEN THE SEPARATION IS GREATER THAN 24 INCHES A DROP MANHOLE MUST BE USED.
7.MANHOLES GREATER THAN 18 FEET IN DEPTH SHALL HAVE AN INSIDE DIAMETER OF 5'. FOR SANITARY SEWER MAINS GREATER THAN 18 INCHES IN DIAMETER, MANHOLES SHALL BE A MINIMUM OF 5' IN DIAMETER.
8.RIM ELEVATIONS SHALL BE AT GRADE IN STREETS & PARKING LOTS.
9. RIM ELEVATIONS ALONG OUTFALLS SHALL BE A MINIMUM OF 3' ABOVE EXISTING GROUND ELEVATIONS. IF THE OUTFALL IS LOCATED WITHIN THE FLOOD PLAIN, RIM ELEVATIONS SHALL BE 2' ABOVE THE 100-YEAR FLOOD ELEVATION (WHILE STILL MAINTAINING THE 3' ABOVE THE EXISTING GROUND ELEVATION MINIMUM REQUIREMENT). THE 100-YEAR FLOOD ELEVATION SHALL BE NOTED ON THE CONSTRUCTION DRAWINGS.
10. MANHOLE STEPS TO BE NO. 3 REBAR ENCASED IN POLYPROPYLENE, SPACED AS SHOWN IN A SINGLE VERTICAL ALIGNMENT.
11. EXTERIOR COATING TO BE 2 COATS OF WATERPROOF BITUMASTIC COMPOUND.
12. APPROVED BITUMINIOUS BASE SEALANT TO BE APPLIED TO TOP OF CONE FOR WATERTIGHT SEAL.
13. MANHOLE SECTIONS TO BE WRAPPED IN EZ-WRAP BUTYL JOINT WRAP.

STANDARD DETAILS
MANHOLE NOTES

664 Churchmans Road
Newark, Delaware 19702
P.O. Box 15004, Wilmington, Delaware 19850
Phone: (302) 453-6900 Fax: (302) 453-5800

ISSUED: JUNE 15, 2012	REVISED: AUGUST 31, 2015
REVISED: FEBRUARY 28, 2014	SCALE: NOT TO SCALE
REVISED: AUGUST 7, 2015	PLATE: MH-NOTES

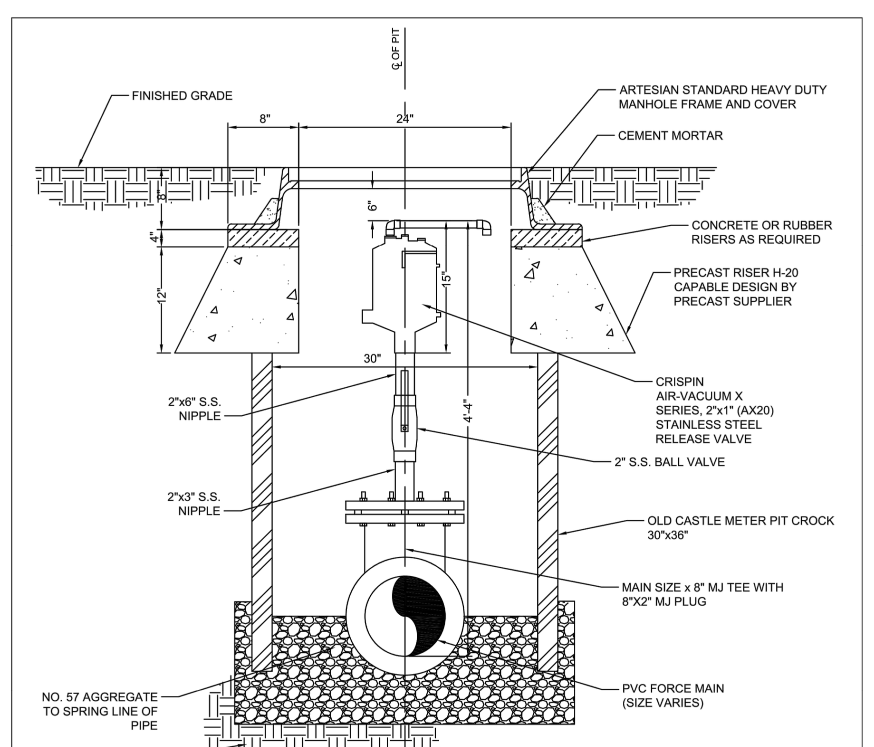

NOTES:
1. THIS PIT IS NOT DESIGNED FOR TRAFFIC LOADS. IF A TRAFFIC DUTY PIT IS REQUIRED, CALL A.W.C. METER SHOP FOR MORE INFORMATION.
2. WHEN INSTALLING, BACKFILL CAREFULLY TO PREVENT DISTORTING OR CRACKING PIT.
3. DAMAGED PITS WILL NOT BE ACCEPTED!! ALTERING PIT IN ANY WAY REQUIRES PRIOR AUTHORIZATION FROM THE METER SHOP FOR INSPECTION.

STANDARD DETAILS
MODIFIED COMB. SEWERAGE AIR
RELEASE/VACUUM RELIEF VALVE
NON-TRAFFIC AREAS

664 Churchmans Road
Newark, Delaware 19702
P.O. Box 15004, Wilmington, Delaware 19850
Phone: (302) 453-6900 Fax: (302) 453-5800

ISSUED: AUGUST 6, 2019	SCALE: NOT TO SCALE
REVISED: NOV. 10, 2023	
REVISED:	PLATE: MH-07

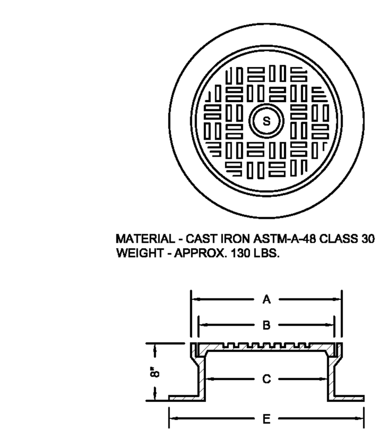

DESIGN NO.	A	B	C	E
	B114012"	10 3/4"	9"	16"
	B118017"	16"	14 1/2"	23 7/8"

STANDARD DETAILS
RICHARD FOUNDRY CORP.
CLEANOUT FRAME AND COVER
B-1140 & B-1180

664 Churchmans Road
Newark, Delaware 19702
P.O. Box 15004, Wilmington, Delaware 19850
Phone: (302) 453-6900 Fax: (302) 453-5800

ISSUED: JUNE 15, 2012	SCALE: NOT TO SCALE
REVISED: FEBRUARY 28, 2014	
REVISED:	PLATE: CO-05

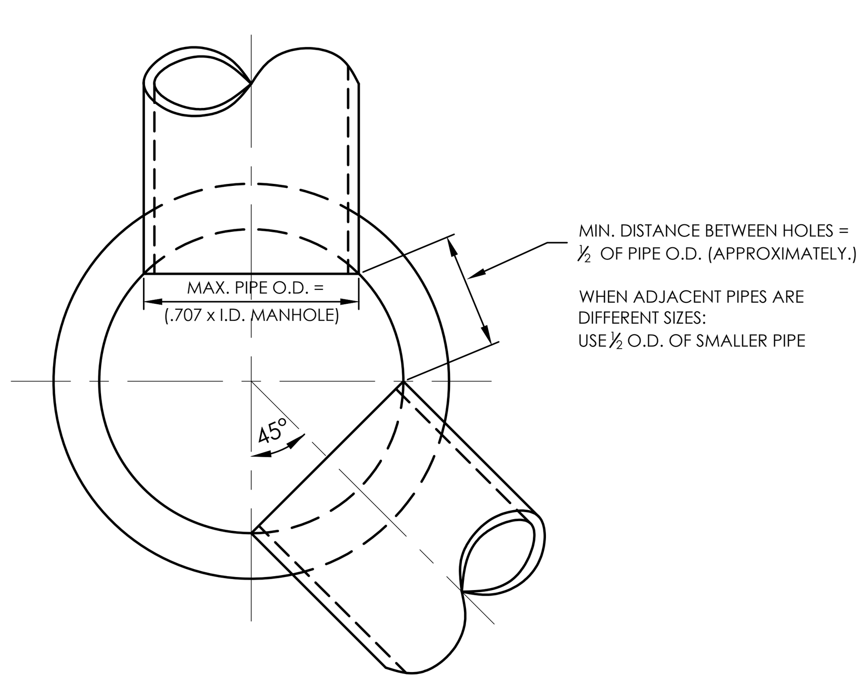

PLAN VIEW OF MANHOLE

MANHOLE SIZE & WALL THICKNESS	4' I.D. 5" WALL	5' I.D. 6" WALL	6' I.D. 7" WALL	7' I.D. 8" WALL	8' I.D. 9" WALL
MAX. PIPE O.D. STRAIGHT THRU TO 45° DEFLECTION	30" O.D.	42" O.D.	51" O.D.	59" O.D.	73 1/2 " O.D.
MAX. PIPE O.D. 90° DEFLECTION	23" O.D.	32" O.D.	38" O.D.	44" O.D.	50" O.D.

MANHOLE SIZING DETAIL
N.T.S.

solutions
Integrated Planning
Engineering & Management, LLC

303 North Bedford Street
Georgetown, DE 19947
T. 302.297.9215

3003 Merritt Mill Road
Salisbury, MD 21804
T. 410.572.8833

www.solutionsipem.com Copyright © 2023

Date 07/01/2024

REVISIONS

NO.	DATE	DESCRIPTION
1	5/23/24	PLANS REVISED PER AGENCIES COMMENTS.
2	6/28/24	PLANS REVISED PER AGENCIES COMMENTS.
3	7/1/24	PLANS REVISED PER ARTESIAN COMMENTS.

SANITARY SEWER DETAILS 1
for
TWIN MASTS
SUSSEX COUNTY, DELAWARE
Prepared for: Twin Masts, LLC

Date:	3/12/24
Job Number:	G21029
Scale:	AS NOTED
Drawn By:	EDT
Designed By:	JPR
Approved By:	JRE

Sheet No.:
47

File Name:
G21029-Sewer-Details.dwg

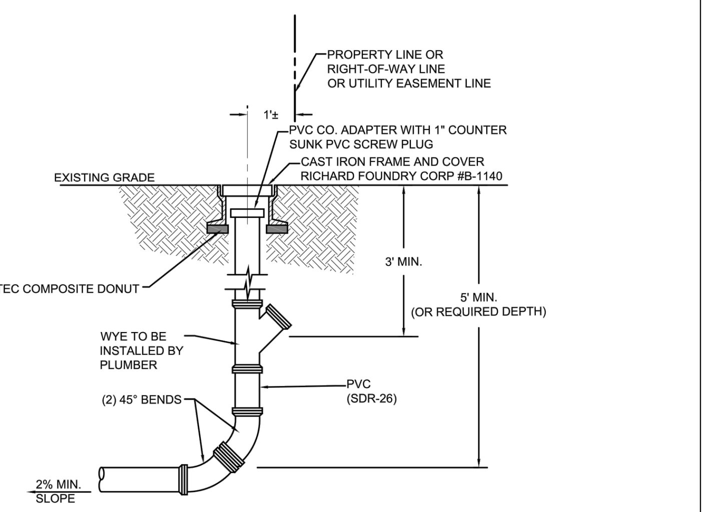

NOTES:
1. C.O. NOT TO BE LOCATED IN DITCH, SWALE, ETC.
2. C.O. NOT TO BE LOCATED IN DRIVEWAYS OR SIDEWALKS.
3. MAINTAIN 10' MIN. SEPARATION BETWEEN WATER AND SEWER LINES.
4. ALL FITTINGS TO BE PLASTIC TRENDS PVC SDR-26.

STANDARD DETAILS

STANDARD LATERAL CLEANOUT

ARTESIAN WASTEWATER MANAGEMENT, INC.
664 Churchmans Road
Newark, Delaware 19702
P.O. Box 15004, Wilmington, Delaware 19850
Phone: (302) 453-6900 Fax: (302) 453-5800

ISSUED: MAY 2, 2019	SCALE: NOT TO SCALE
REVISED:	
REVISED:	PLATE: CO-01

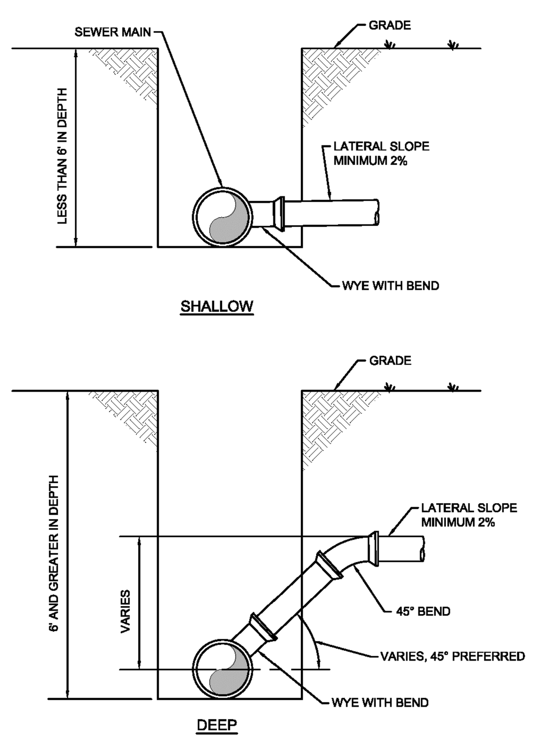

STANDARD DETAILS

STANDARD LATERAL CONNECTIONS

ARTESIAN WASTEWATER MANAGEMENT, INC.
664 Churchmans Road
Newark, Delaware 19702
P.O. Box 15004, Wilmington, Delaware 19850
Phone: (302) 453-6900 Fax: (302) 453-5800

ISSUED: JUNE 15, 2012	SCALE: NOT TO SCALE
REVISED: FEBRUARY 28, 2014	
REVISED:	PLATE: CO-03

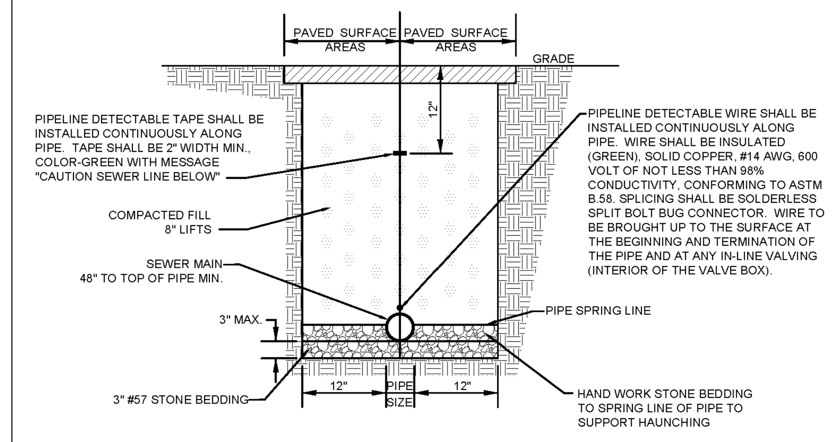

STANDARD DETAILS

TRENCH DETAIL FOR PAVED AREAS

ARTESIAN WASTEWATER MANAGEMENT, INC.
664 Churchmans Road
Newark, Delaware 19702
P.O. Box 15004, Wilmington, Delaware 19850
Phone: (302) 453-6900 Fax: (302) 453-5800

ISSUED: JUNE 15, 2012	REVISED: SEPTEMBER 1, 2015
REVISED: FEBRUARY 20, 2014	SCALE: NOT TO SCALE
REVISED: MARCH 17, 2015	PLATE: TR-01

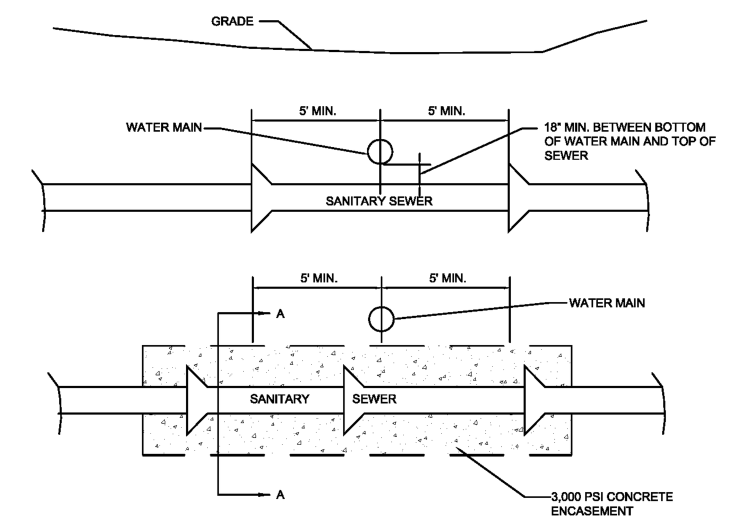

NOTES:
1) IF DISTANCE FROM WATER MAIN TO SEWER JOINT IS LESS THAN 5' MIN., THEN ALL SEWER JOINTS WITHIN 10' MUST BE ENCASED IN CONCRETE. (CONCRETE MUST BE LAID UP TO NEXT BELL OR COLLAR BEYOND THE 5' MIN.)

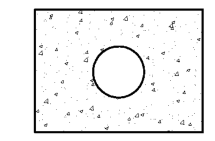

SECTION A-A

STANDARD DETAILS

WATER AND SEWER CROSSING

ARTESIAN WASTEWATER MANAGEMENT, INC.
664 Churchmans Road
Newark, Delaware 19702
P.O. Box 15004, Wilmington, Delaware 19850
Phone: (302) 453-6900 Fax: (302) 453-5800

ISSUED: JUNE 15, 2012	SCALE: NOT TO SCALE
REVISED: FEBRUARY 20, 2014	
REVISED:	PLATE: CR-01

PIPE SIZE "D"	1.25D	1.5D	2D	2.5D	3D
20"	25"	30"	40"	50"	60"
16"	20"	24"	32"	40"	48"
12"	15"	18"	24"	30"	36"
10"	12.5"	15"	24"	25"	30"
8"	10"	12"	20"	20"	24"
6"	7.5"	9"	12"	15"	18"
4"	5"	6"	8"	10"	12"

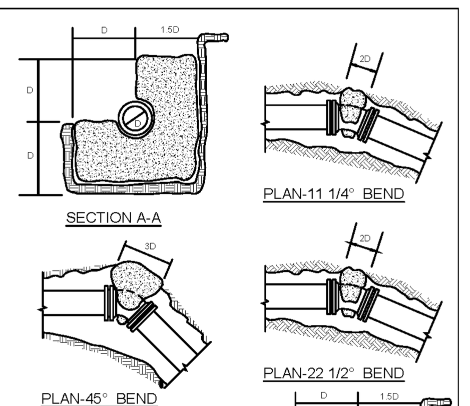

GENERAL NOTES
1. ALLOW SUFFICIENT SPACE TO HAVE AN ACCESS TO BOLTS IN THE MECHANICAL JOINT.
2. STRENGTH OF CONCRETE SHOULD BE 2500 P.S.I. (MIN.) AFTER 28 DAYS.
3. ALL REACTION BACKING TO EXTEND TO UNDISTURBED EARTH.
4. WHEN USING MECHANICAL JOINT, USE TAR PAPER BETWEEN FITTING AND CONCRETE.
5. ALLOW 3D TO 4D BETWEEN FITTINGS.

WYE

PIPE SIZE "D"	1.5D	2D	3D
20"	30"	40"	60"
16"	24"	32"	48"
12"	18"	24"	36"
10"	15"	20"	30"
8"	12"	16"	24"
6"	9"	12"	18"
4"	6"	8"	12"

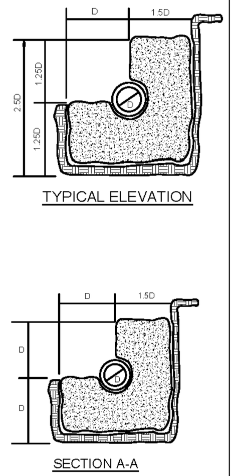

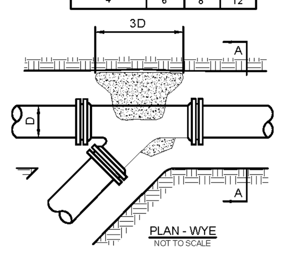

STANDARD DETAILS

THRUST BLOCKS

ARTESIAN WASTEWATER MANAGEMENT, INC.
664 Churchmans Road
Newark, Delaware 19702
P.O. Box 15004, Wilmington, Delaware 19850
Phone: (302) 453-6900 Fax: (302) 453-5800

ISSUED: JUNE 15, 2012	SCALE: NOT TO SCALE
REVISED: FEBRUARY 20, 2014	
REVISED: SEPTEMBER 1, 2015	PLATE: AWCBS-05

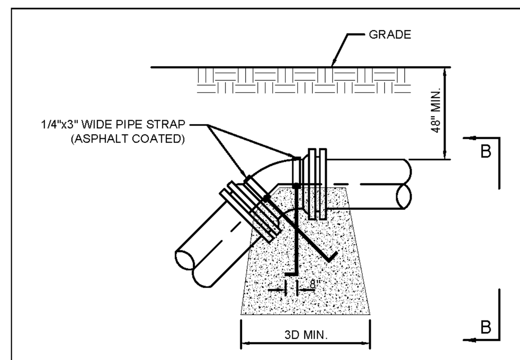

PIPE SIZE "D"	1.25D	1.5D	2D	2.5D	3D
20"	25"	30"	40"	50"	60"
16"	20"	24"	32"	40"	48"
12"	15"	18"	24"	30"	36"
10"	12.5"	15"	24"	25"	30"
8"	10"	12"	20"	20"	24"
6"	7.5"	9"	12"	15"	18"
4"	5"	6"	8"	10"	12"

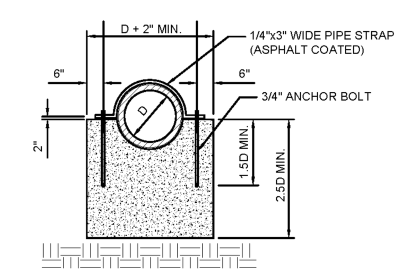

GENERAL NOTES
1. ALLOW SUFFICIENT SPACE TO HAVE AN ACCESS TO BOLTS IN THE MECHANICAL JOINT.
2. STRENGTH OF CONCRETE SHOULD BE 2500 P.S.I. (MIN.) AFTER 28 DAYS.
3. ALL REACTION BACKING TO EXTEND TO UNDISTURBED EARTH.
4. WHEN USING MECHANICAL JOINT, USE TAR PAPER BETWEEN FITTING AND CONCRETE.

STANDARD DETAILS

THRUST BLOCKS FOR VERTICAL BENDS

ARTESIAN WASTEWATER MANAGEMENT, INC.
664 Churchmans Road
Newark, Delaware 19702
P.O. Box 15004, Wilmington, Delaware 19850
Phone: (302) 453-6900 Fax: (302) 453-5800

ISSUED: SEPTEMBER 1, 2015	SCALE: NOT TO SCALE
REVISED:	
REVISED:	PLATE: AWCBS-06

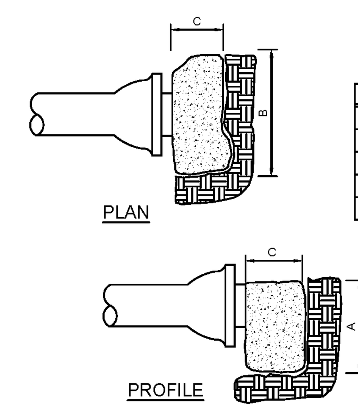

PLUG OR CAP

SIZE	A	B	C
4	1'-0"	1'-6"	1'-0"
6	1'-0"	1'-6"	1'-0"
8	1'-6"	2'-0"	1'-3"
10	1'-8"	2'-6"	1'-6"
12	2'-0"	3'-0"	1'-6"

GENERAL NOTES
1. ALLOW SUFFICIENT SPACE TO HAVE AN ACCESS TO BOLTS IN THE MECHANICAL JOINT.
2. STRENGTH OF CONCRETE SHOULD BE 2500 P.S.I. (MIN.) AFTER 28 DAYS.
3. ALL REACTION BACKING TO EXTEND TO UNDISTURBED EARTH.
4. WHEN USING MECHANICAL JOINT, USE TAR PAPER BETWEEN FITTING AND CONCRETE.

STANDARD DETAILS

BUTRESSES FOR PLUGS AND CAPS

ARTESIAN WASTEWATER MANAGEMENT, INC.
664 Churchmans Road
Newark, Delaware 19702
P.O. Box 15004, Wilmington, Delaware 19850
Phone: (302) 453-6900 Fax: (302) 453-5800

ISSUED: SEPTEMBER 1, 2015	SCALE: NOT TO SCALE
REVISED:	
REVISED:	PLATE: AWCBS-02

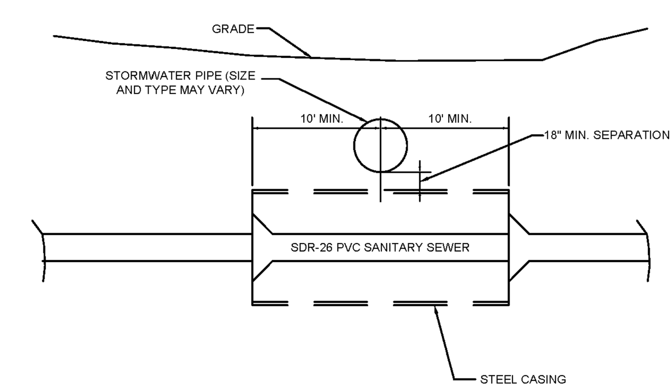

NOTES:
1. WHERE STORMWATER PIPES (SIZE AND TYPE MAY VARY) CROSS OVER THE GRAVITY SANITARY SEWER SYSTEM, THE SEWER SHALL BE CONSTRUCTED OF DIP OR SDR-26 PVC STEEL ENCASED (10' MINIMUM).
2. SEE PLATE CR-03 FOR PIPE CASING DETAIL.

STANDARD DETAILS

STORMWATER AND SEWER CROSSING

ARTESIAN WASTEWATER MANAGEMENT, INC.
664 Churchmans Road
Newark, Delaware 19702
P.O. Box 15004, Wilmington, Delaware 19850
Phone: (302) 453-6900 Fax: (302) 453-5800

ISSUED: FEBRUARY 20, 2014	SCALE: NOT TO SCALE
REVISED: OCTOBER 8, 2014	
REVISED: SEPTEMBER 1, 2015	PLATE: CR-02

solutions
Integrated Planning
Engineering & Management, LLC

303 North Bedford Street
Georgetown, DE 19947
T. 302.297.9215

3003 Merritt Mill Road
Salisbury, MD 21804
T. 410.572.8833

www.solutionsipem.com

Copyright © 2023

Date 07/01/2024

REVISIONS

NO.	DATE	DESCRIPTION
1	5/23/24	PLANS REVISED PER AGENCIES COMMENTS.
2	6/28/24	PLANS REVISED PER AGENCIES COMMENTS.
3	7/1/24	PLANS REVISED PER ARTESIAN COMMENTS.

SANITARY SEWER DETAILS 2
for
TWIN MASTS
SUSSEX COUNTY, DELAWARE
Prepared for: Twin Masts, LLC

Date:	3/12/24
Job Number:	G21029
Scale:	AS NOTED
Drawn By:	EDT
Designed By:	JPR
Approved By:	JRE

Sheet No.: 48

File Name: G21029-Sewer-Details.dwg

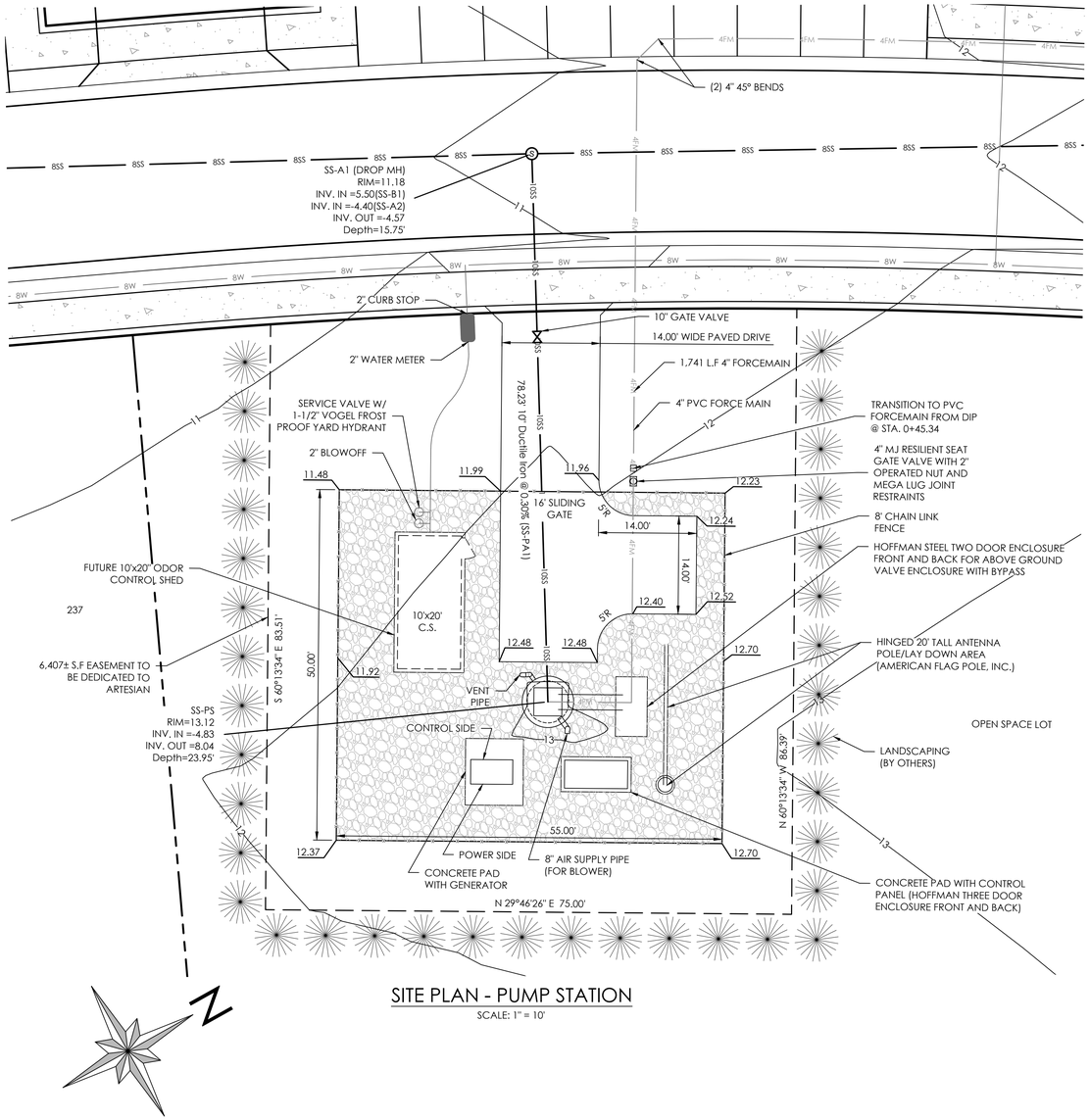

SITE PLAN - PUMP STATION

SCALE: 1" = 10'

NP 3153 SH 3~ 273

Patented self cleaning semi-open channel impeller, ideal for pumping in waste water applications. Modular based design with high adaptation grade.

FLYGT a xylem brand

Technical specification

Curves according to: Water, pure Water, pure [100%],39.2 °F,62.42 lb/ft³,1.6891E-5 ft²/s

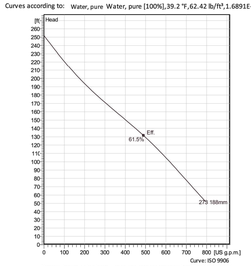

Nominal (mean) data shown. Under- and overperformance from this data should be expected due to standard manufacturing tolerances.
Please consult your local Flygt representative for performance guarantees.

Configuration

Motor number N3153.860 21-18-2IE-W IE3 23hp	**Installation type** P - Semi-permanent, Wet
Impeller diameter 188 mm	**Discharge diameter** 3 inch

Pump information

Impeller diameter 188 mm

Discharge diameter 3 inch

Inlet diameter 150 mm

Maximum operating speed 3525 rpm

Number of blades 2

Max. fluid temperature 40 °C

Material

Impeller Stainless steel

Project	Xylect-22265645	**Created by**			
Block		**Created on**	5/9/2024	**Last update**	5/9/2024

NP 3153 SH 3~ 273

Technical specification

FLYGT a xylem brand

Motor - General

Motor number N3153.860 21-18-2IE-W IE3 23hp	**Phases** 3~	**Rated speed** 3525 rpm	**Rated power** 23 hp
ATEX approved No	**Number of poles** 2	**Rated current** 25 A	**Stator variant** 1
Frequency 60 Hz	**Rated voltage** 480 V	**Insulation class** H	**Type of Duty** S1
Version code 860			

Motor - Technical

Power factor - 1/1 Load 0.88	**Motor efficiency - 1/1 Load** 92.9 %	**Total moment of inertia** 0.797 lb ft²	**Starts per hour max.** 30
Power factor - 3/4 Load 0.83	**Motor efficiency - 3/4 Load** 93.7 %	**Starting current, direct starting** 228 A	
Power factor - 1/2 Load 0.73	**Motor efficiency - 1/2 Load** 93.9 %	**Starting current, star-delta** 76 A	

PUMP SPECIFICATIONS

NP 3153 SH 3~ 273

Duty Analysis

FLYGT a xylem brand

Curves according to: Water, pure [100%] ; 39.2°F; 62.42lb/ft³; 1.6891E-5ft²/s

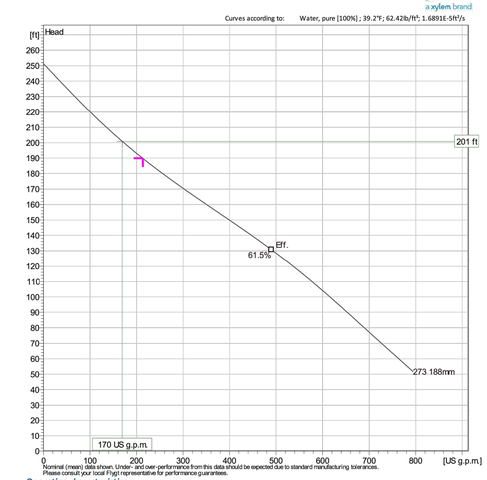

Nominal (mean) data shown. Under- and over-performance from this data should be expected due to standard manufacturing tolerances.
Please consult your local Flygt representative for performance guarantees.

Operating characteristics

Pumps / Systems	Flow	Head	Shaft power	Flow	Head	Shaft power	Hydr.eff.	Spec. Energy	NPSHre
	US g.p.m.	ft	hp	US g.p.m.	ft	hp		kWh/US MG	ft
1	170	201	22	170	201	22	39.1 %	1770	13.3

OPERATIONAL POINT WITH ADDITIONAL 200 GPM FLOW = 170 GPM @ 201 FT

OPERATIONAL POINT W/O ADDITIONAL 200 GPM FLOW = 220 GPM @ 190 FT

SYSTEM CURVE

FRICTION HEAD

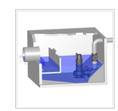

Friction loss calculation

Pumped fluid Water, pure	**Static head** 134.5	**Layout** Wet well installation
Flow 157 US g.p.m.	**Number of pumps** 1	**Calculation model** Colebrook-White
Viscosity 1.69E-5 ft²/s	**Nature of system** Single head pump	

Type	Ø (inch)	? or L	Qty.	v (ft/s)	k (inch)	ΔH (ft)
Ø = Diameter v = Velocity k = Pipe roughness ΔH = Friction head						
Force Main - Metal / Ductile iron cement lining PN 16 / DN 100 (118x4x4 mm) / Used piping / Old Pipes						
Pipe length	4.016	50 ft	1	3.977	0.04724	1.495
Elbows	4.016	1.5	5	3.977		0.3686
Non-return valves	4.016	0.9	1	3.977		0.2211
T-piece	4.016	0.4	1	3.977		0.09829
VALVE	4.016	0.3	1	3.977		0.07371
Total friction head						**2.257**
Force Main - Plastic / PVC PN 16 / DN 100 (110x8,2 mm) / Used piping / Old Pipes						
Pipe length	3.685	1800 ft	1	4.723	0.001575	41.56
VALVE	3.685	0.3	1	4.723		0.104
Total friction head						**41.67**
Force Main - Plastic / PVC PN 16 / DN 200 (200x14,9 mm) / Used piping / Old Pipes						
Pipe length	7.68	20000 ft	1	1.087	0.001575	12.9
Elbows	7.68	0.3	1	1.087		0.00551
VALVE	7.68	1.2	4	1.087		0.02204
Total friction head						**12.93**
Friction loss head						56.85 ft
Total static head						134.5 ft
Total head						**191.3 ft**

ADDITIONAL FLOW AS STATIC HEAD

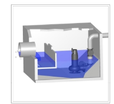

Friction loss calculation

Pumped fluid Water, pure	**Static head** 0	**Layout** Wet well installation
Flow 357 US g.p.m.	**Number of pumps** 1	**Calculation model** Colebrook-White
Viscosity 1.69E-5 ft²/s	**Nature of system** Single head pump	

Type	Ø (inch)	? or L	Qty.	v (ft/s)	k (inch)	ΔH (ft)
Ø = Diameter v = Velocity k = Pipe roughness ΔH = Friction head						
Force Main - Plastic / PVC PN 16 / DN 200 (200x14,9 mm) / Used piping / Old Pipes						
Pipe length	7.68	20000 ft	1	2.473	0.001575	57.1
Total friction head						**57.1**
Force Main - Plastic / PVC PN 16 / DN 150 (160x11,9 mm) / Used piping / Old Pipes						
Pipe length	5.86	2600 ft	1	4.247	0.001575	27.93
Total friction head						**27.93**
Friction loss head						85.04 ft
Total static head						0 ft
Total head						**85.04 ft**

HEAD CALCULATIONS

PUMP STATION CALCULATIONS

Community	Homes	Amenities	Total EDUs
TWIN MASTS	249	2	251

Number of EDU's	=	251
Base Flow (240 GPD/EDU)	=	60,240 GPD 41.83 GPM
Peak Factor (Per Equation)	=	3.75
Peak Flow	=	225,900 GPD 157 GPM
Volume = 2 min. x 157 GPM	=	314 GALLONS
8' Diameter, 0.90 ft Depth (338 GALLONS)		
PIPING	=	4" @ 4 FPS

DESIGN FLOW

The pump station will serve 251 EUDs (See Pump Station Calculations, hereon)

COLLECTION SYSTEM

The collection system will consist of 8" PVC SDR-26 & 10" diameter ductile iron pipe and associated manholes. All sewer materials and installation shall be per Artesian Wastewater Management Standards.

TRANSMISSION

The new 4" diameter PVC force main will be installed from the proposed pump station to a tie in point at an existing force main located along Route 1- Coastal Highway.

Diameter = 4" PVC

Design Flow = 157 gpm (Twin Masts)
200 gpm (Additional flow from Artesian)
Total = 357 gpm

Static Head = 134.5 feet (49.5 + 85.0)
Elevation Head = 49.5' [42(plant elevation from Artesian) + 7.53 = 49.5']
Head from existing flow in part of forcemain = 85.0'

Total Head = 173 feet

solutions

303 North Bedford Street
Georgetown, DE 19947
T. 302.297.9215

3003 Merrill Mill Road
Salisbury, MD 21804
T. 410.572.8833

www.solutionsipem.com

Copyright © 2023

JAMES R. ERIKSEN LICENSE 17850 PROFESSIONAL ENGINEER

Date 07/01/2024

REVISIONS

NO.	DATE	DESCRIPTION
1	5/23/24	PLANS REVISED PER AGENCIES COMMENTS.
2	6/28/24	PLANS REVISED PER AGENCIES COMMENTS.
3	7/1/24	PLANS REVISED PER ARTESIAN COMMENTS.

PUMP STATION SITE PLAN

for

TWIN MASTS

SUSSEX COUNTY, DELAWARE

Prepared for: Twin Masts, LLC

Date:	3/12/24
Job Number:	G21029
Scale:	AS NOTED
Drawn By:	JPR
Designed By:	JPR
Approved By:	JRE

Sheet No.: 49

File Name: G21029-PumpStation

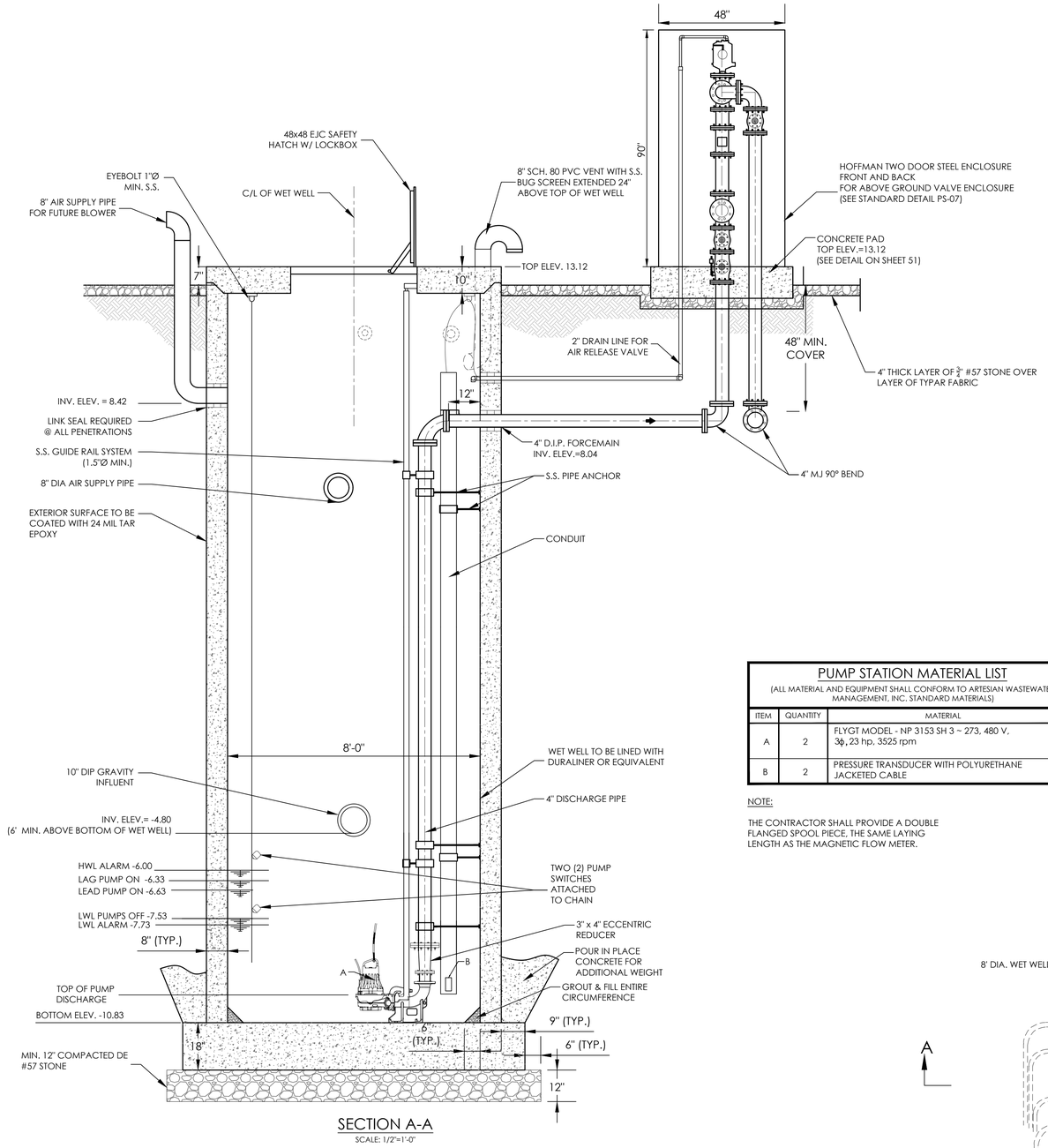

SECTION A-A

SCALE: 1/2"=1'-0"

PUMP STATION MATERIAL LIST

(ALL MATERIAL AND EQUIPMENT SHALL CONFORM TO ARTESIAN WASTEWATER MANAGEMENT, INC. STANDARD MATERIALS)

ITEM	QUANTITY	MATERIAL
A	2	FLYGT MODEL - NP 3153 SH 3 ~ 273, 480 V, 3ϕ, 23 hp, 3525 rpm
B	2	PRESSURE TRANSDUCER WITH POLYURETHANE JACKETED CABLE

NOTE:

THE CONTRACTOR SHALL PROVIDE A DOUBLE FLANGED SPOOL PIECE, THE SAME LAYING LENGTH AS THE MAGNETIC FLOW METER.

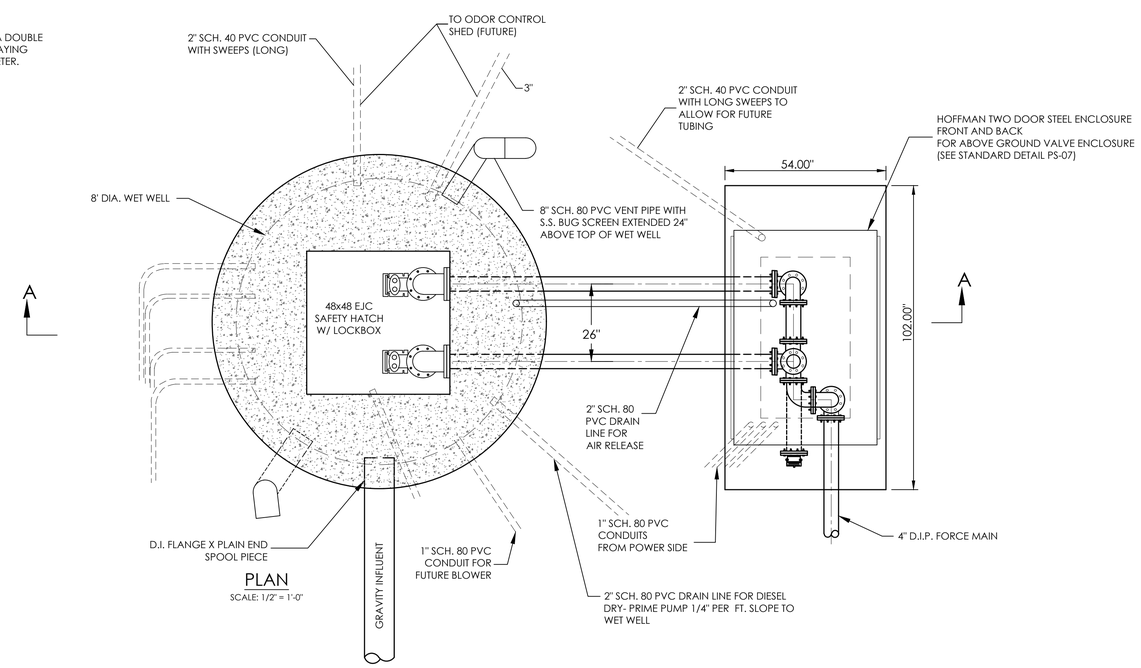

PLAN

SCALE: 1/2" = 1'-0"

solutions

303 North Bedford Street
Georgetown, DE 19947
T. 302.297.9215

3003 Merritt Mill Road
Salisbury, MD 21804
T. 410.572.8833

www.solutionsipem.com

Copyright © 2023

JAMES R. ERIKSEN LICENSE 27012 DELAWARE PROFESSIONAL ENGINEER

Date 07/01/2024

REVISIONS

NO.	DATE	DESCRIPTION
1	5/23/24	PLANS REVISED PER AGENCIES COMMENTS.
2	6/28/24	PLANS REVISED PER AGENCIES COMMENTS.
3	7/11/24	PLANS REVISED PER ARTESIAN COMMENTS.

PUMP STATION DETAILS 1

for

TWIN MASTS

SUSSEX COUNTY, DELAWARE

Prepared for: Twin Masts, LLC

Date:	3/12/24
Job Number:	G21029
Scale:	AS NOTED
Drawn By:	JPR
Designed By:	JPR
Approved By:	JRE

Sheet No.: 50

File Name: G21029-PumpStation

NOTE: REBAR TO BE CUT IN FIELD AS NECESSARY TO AVOID "SLAB PENETRATIONS (I.E. HATCH AND VENTS)". ALL CONCRETE WORK SHALL CONFORM TO ACI CODE FOR TEMPERATURE REINFORCEMENT AND STRENGTH REINFORCEMENT.

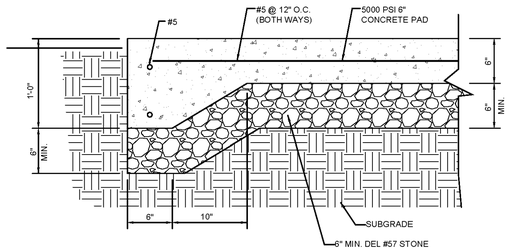

(FOR ALL CONCRETE SUPPORTING STRUCTURES)

STANDARD DETAILS

PUMP STATION EQUIPMENT CONCRETE PAD TYPICAL SECTION

ISSUED: JUNE 15, 2012	SCALE: NOT TO SCALE
REVISED: FEBRUARY 20, 2014	
REVISED: SEPTEMBER 1, 2015	PLATE: PS-02

ARTESIAN WASTEWATER MANAGEMENT, INC.
664 Churchmans Road
Newark, Delaware 19702
P.O. Box 15004, Wilmington, Delaware 19850
Phone: (302) 453-6900 Fax: (302) 453-5800

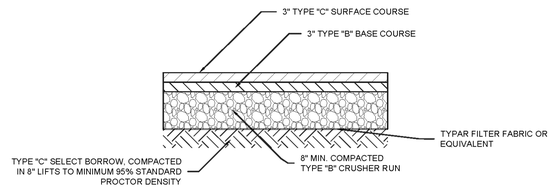

NOTES:
1. AREAS SHALL BE CONSTRUCTED BY REMOVING ALL TOPSOIL AND ALL UNSUITABLE MATERIAL.
2. TO BE USED FOR ALL ENTRANCE AREAS, DRIVEWAYS AND PARKING AREAS.

STANDARD DETAILS

PUMP STATION DRIVEWAY PAVEMENT SECTION

ISSUED: JUNE 15, 2012	SCALE: NOT TO SCALE
REVISED: FEBRUARY 20, 2014	REVISED: JUNE 20, 2016
REVISED: SEPTEMBER 1, 2015	PLATE: PS-03

ARTESIAN WASTEWATER MANAGEMENT, INC.
664 Churchmans Road
Newark, Delaware 19702
P.O. Box 15004, Wilmington, Delaware 19850
Phone: (302) 453-6900 Fax: (302) 453-5800

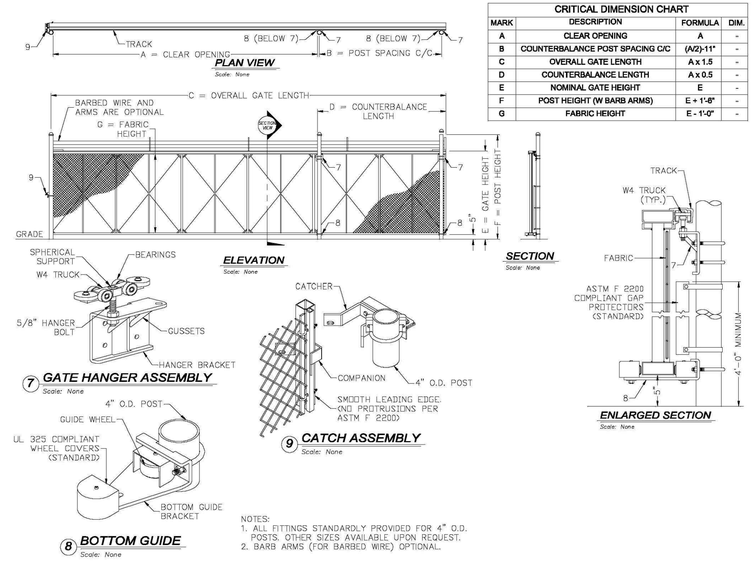

CRITICAL DIMENSION CHART			
MARK	DESCRIPTION	FORMULA	DIM.
A	CLEAR OPENING	A	-
B	COUNTERBALANCE POST SPACING C/C	(A/2)-11"	-
C	OVERALL GATE LENGTH	A x 1.5	-
D	COUNTERBALANCE LENGTH	A x 0.5	-
E	NOMINAL GATE HEIGHT	E	-
F	POST HEIGHT (W BARB ARMS)	E + 1'-6"	-
G	FABRIC HEIGHT	E - 1'-0"	-

NOTES:
1. ALL FITTINGS STANDARDLY PROVIDED FOR 4" O.D. POSTS. OTHER SIZES AVAILABLE UPON REQUEST.
2. BARB ARMS (FOR BARBED WIRE) OPTIONAL.

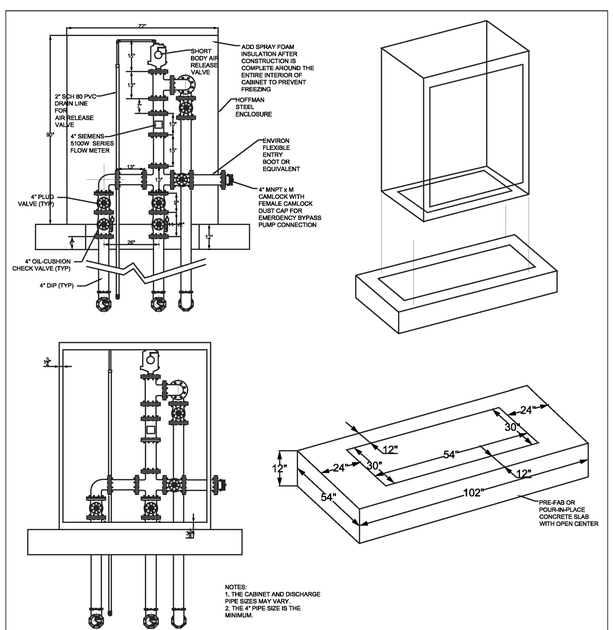

NOTES:
1. THE CABINET AND DISCHARGE PIPE SIZES MAY VARY.
2. THE 4" PIPE SIZE IS THE MINIMUM.

STANDARD DETAILS

4-INCH ABOVE GRADE VALVE ENCLOSURE WITH BYPASS

ISSUED: JANUARY 31, 2019	SCALE: NOT TO SCALE
REVISED:	
REVISED:	PLATE: PS-07

ARTESIAN WASTEWATER MANAGEMENT, INC.
664 Churchmans Road
Newark, Delaware 19702
P.O. Box 15004, Wilmington, Delaware 19850
Phone: (302) 453-6900 Fax: (302) 453-5800

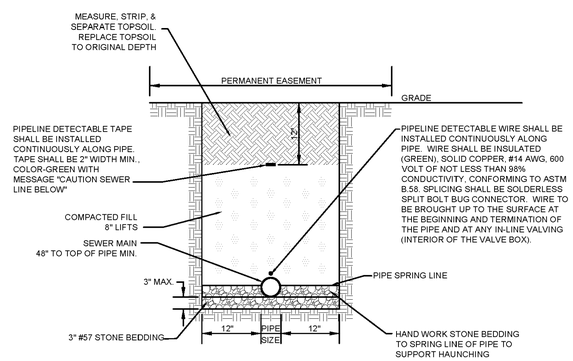

NOTE: SUBTRACT MEASURED TOPSOIL DEPTH FROM FULL TRENCH DEPTH TO OBTAIN COMPACTED MATERIAL DEPTH.

STANDARD DETAILS

TRENCH DETAILS FOR UNPAVED AREAS

ISSUED: JUNE 15, 2012	REVISED: SEPTEMBER 1, 2015
REVISED: FEBRUARY 20, 2014	SCALE: NOT TO SCALE
REVISED: MARCH 17, 2015	PLATE: TR-02

ARTESIAN WASTEWATER MANAGEMENT, INC.
664 Churchmans Road
Newark, Delaware 19702
P.O. Box 15004, Wilmington, Delaware 19850
Phone: (302) 453-6900 Fax: (302) 453-5800

POST CAP	TOP & BOTTOM FABRIC DETAIL
DOME	KNUCKLE

FENCE HEIGHT	END & CORNER POSTS		LINE POSTS	
NOMINAL HEIGHT	B-1 BAR LENGTH	H-1 HEIGHT ABOVE GRADE	B-2 BAR LENGTH	H-2 HEIGHT ABOVE GRADE
4'-0"	7'-0"	4'-0 5/8"	6'-8"	3'-8 7/8"
6'-0"	9'-0"	6'-0 5/8"	8'-8"	5'-8 7/8"
8'-0"	11'-0"	8'-0 5/8"	10'-8"	7'-8 7/8"
10'-0"	13'-0"	10'-0 5/8"	12'-8"	9'-8 7/8"
12'-0"	15'-0"	12'-0 5/8"	14'-8"	11'-8 7/8"

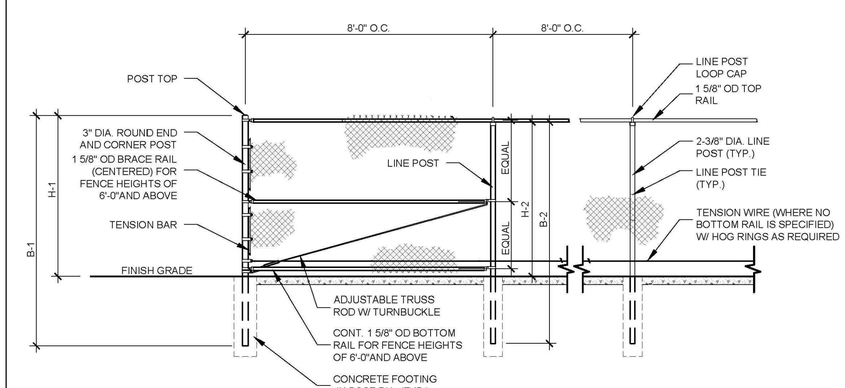

solutions
303 North Bedford Street
Georgetown, DE 19947
T. 302.297.9215
3003 Merritt Mill Road
Salisbury, MD 21804
T. 410.572.8833
www.solutionsipem.com

Copyright © 2023

JAMES R. ERIKSEN LICENSE PROFESSIONAL ENGINEER

Date 07/01/2024

REVISIONS

NO.	DATE	DESCRIPTION
1	5/23/24	PLANS REVISED PER AGENCIES COMMENTS.
2	6/28/24	PLANS REVISED PER AGENCIES COMMENTS.
3	7/1/24	PLANS REVISED PER ARTESIAN COMMENTS.

PUMP STATION DETAILS 2

for

TWIN MASTS

SUSSEX COUNTY, DELAWARE

Prepared for: Twin Masts, LLC

Date:	3/12/24
Job Number:	G21029
Scale:	AS NOTED
Drawn By:	JPR
Designed By:	JPR
Approved By:	JRE

Sheet No.: 51

File Name: G21029-PumpStation

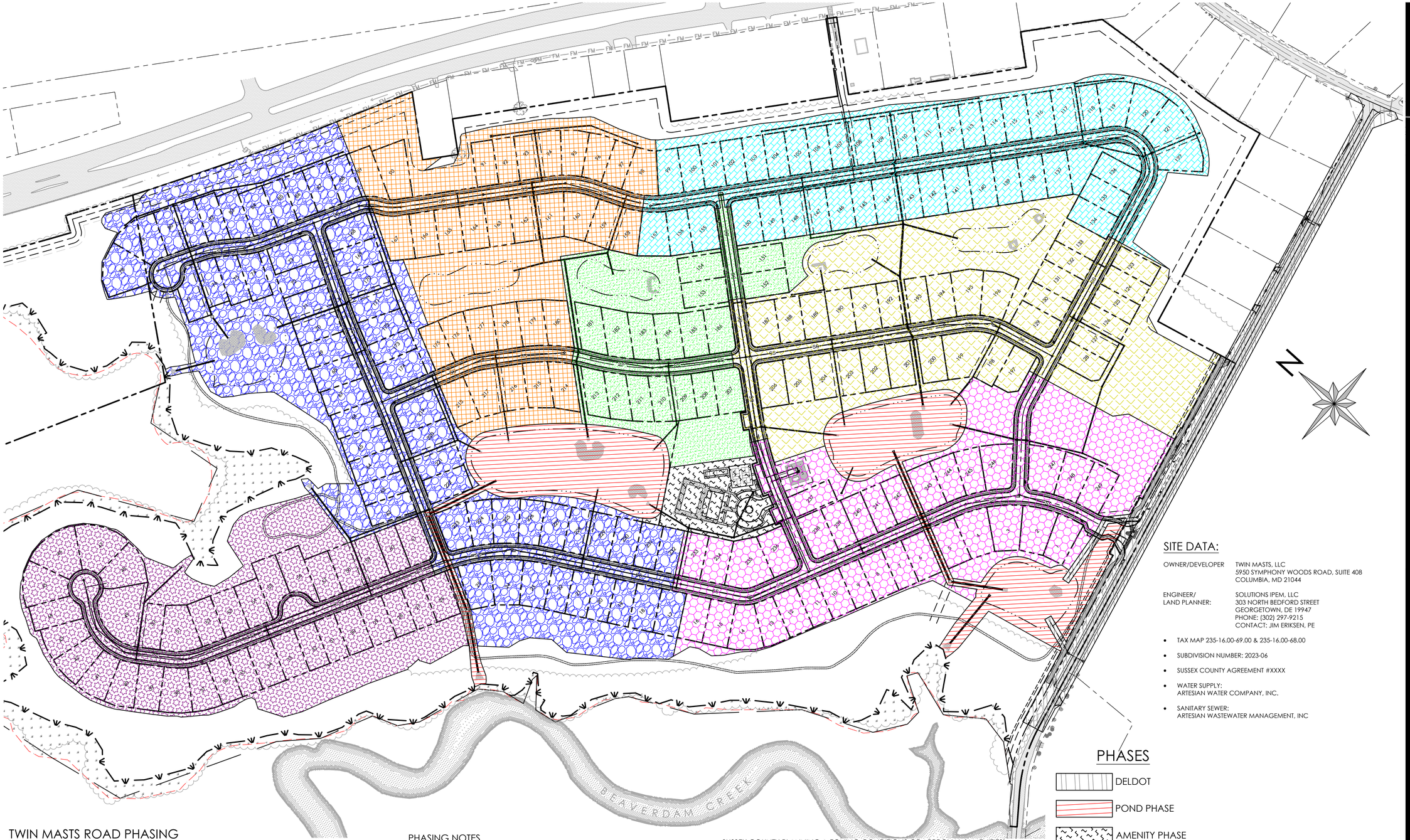

SITE DATA:

OWNER/DEVELOPER: TWIN MASTS, LLC
5950 SYMPHONY WOODS ROAD, SUITE 408
COLUMBIA, MD 21044

ENGINEER/ LAND PLANNER: SOLUTIONS IPEM, LLC
303 NORTH BEDFORD STREET
GEORGETOWN, DE 19947
PHONE: (302) 297-9215
CONTACT: JIM ERIKSEN, PE

- TAX MAP 235-16.00-69.00 & 235-16.00-68.00
- SUBDIVISION NUMBER: 2023-06
- SUSSEX COUNTY AGREEMENT #XXXX
- WATER SUPPLY:
  ARTESIAN WATER COMPANY, INC.
- SANITARY SEWER:
  ARTESIAN WASTEWATER MANAGEMENT, INC

PHASES

DELDOT

POND PHASE

AMENITY PHASE

PHASE 1 — SF LOTS: 1-16, 233-249 = 33 LOTS
2,051.38± LF ROADWAY & PUMP STATION

PHASE 2 — SF LOTS: 123-133, 187-206 = 31 LOTS
1,751.71± LF ROADWAY

PHASE 3 — SF LOTS: 151-154, 181-186, 207-213 = 17 LOTS
706.76± LF ROADWAY

PHASE 4 — SF LOTS: 99-122, 134-150, 155-157 = 44 LOTS
1,738.56± LF ROADWAY

PHASE 5 — SF LOTS: 17-25, 62-88, 168-174, 219-232 = 57 LOTS
2,541.94± LF ROADWAY

PHASE 6 — SF LOTS: 89-98, 158-167, 175-180, 214-218 = 31 LOTS
1,166.66± LF ROADWAY

PHASE 7 — SF LOTS: 26-61 = 36 LOTS
1,178.62± LF ROADWAY

TWIN MASTS ROAD PHASING

PHASE 1
BULKHEAD TERRACE - 0+00 THRU 3+45.89
KEEL DRIVE - 0+36 THRU 13+50.22
LASHING HOOK AVE. - 0+00 THRU 3+91.27

PHASE 2
BULKHEAD TERRACE - 3+45.89 THRU 7+80.76
LASHING HOOK AVE. - 3+91.27 THRU 7+89.79
MASTHEAD WAY - 0+00 THRU 9+18.32

PHASE 3
BULKHEAD TERRACE - 22+28.92 THRU 23+01.92
LASHING HOOK AVE. - 7+89.79 THRU 10+83.53
MASTHEAD WAY - 9+18.32 THRU 13+67.84

PHASE 4
BULKHEAD TERRACE - 7+80.76 THRU 22+28.92 AND 23+01.92 THRU 24+82.83

PHASE 5
BULKHEAD TERRACE - 32+58.97 THRU 39+35.52
KEEL DRIVE - 13+50.22 THRU 20+36.55
MASTHEAD WAY - 17+58.36 THRU 19+23.38
SALINITY DRIVE - 0+00 THRU 10+14.04

PHASE 6
BULKHEAD TERRACE - 24+82.83 THRU 32+58.97
MASTHEAD WAY - 13+67.84 THRU 17+58.36

PHASE 7
KEEL DRIVE - 20+36.55 THRU 32+15.17

PHASING NOTES

- PORTIONS OF PHASES WILL OVERLAP WHEN PARTIAL OR TEMPORARY IMPROVEMENTS ARE MADE FOR CONNECTION PURPOSES AND FINAL BUILD OUT IS IN A FUTURE PHASE.
- CONTRACTOR/OWNER/DEVELOPER SHALL ALERT THE ENGINEER IMMEDIATELY IF ISSUES WITH THE PHASING PLAN ARE FOUND IN THE FIELD.
- VARIATIONS FROM THE PHASING PLAN SHALL BE COORDINATED WITH THE ENGINEER AND ALL IMPACTED AGENCIES.
- SCD WRITTEN APPROVAL OF PHASING VARIATIONS AND PLAN REVISIONS IS REQUIRED PRIOR TO IMPLEMENTATION.
- NO MORE THAN 20 ACRES SHALL BE DISTURBED AT ANY TIME.
- MATERIAL EXCAVATED FROM STORMWATER PONDS MAY BE STOCK PILED WITHIN FUTURE PHASES FOR FILL IN THOSE PHASES. NO MORE THAN 20 ACRES MAY BE DISTURBED AT ANY TIME.
- PORTIONS OF PHASES MAY HAVE INTERMITTENT PERIODS OF OVERLAP. NO MORE THAN 20 ACRES MAY BE DISTURBED AT ANY TIME.
- PHASING PLAN SUBJECT TO CHANGE, PLEASE REFER TO LATEST RECORDED PHASING PLAN.
- PHASE 1 ALSO INCLUDES PUMP STATION AND FORCEMAIN FOR SANITARY SEWER CONNECTION.

SUSSEX COUNTY PLANNING & ZONING CONDITIONS OF APPROVAL (AMENITIES)

O. AMENITIES SHALL INCLUDE A CLUBHOUSE AND A POOL. THESE AMENITIES SHALL BE COMPLETED AND OPEN TO USE AS REQUIRED BY SECTION 99-21E OF THE SUBDIVISION CODE.

solutions
303 North Bedford Street
Georgetown, DE 19947
T. 302.297.9215

3003 Merritt Mill Road
Salisbury, MD 21804
T. 410.572.8833

www.solutionsipem.com
Copyright © 2023

JAMES A. ERIKSEN LICENSE 22448 PROFESSIONAL ENGINEER

Date 07/01/2024

REVISIONS

NO.	DATE	DESCRIPTION
1	5/23/24	PLANS REVISED PER AGENCIES COMMENTS.
2	6/28/24	PLANS REVISED PER AGENCIES COMMENTS.
3	7/1/24	PLANS REVISED PER ARTESIAN COMMENTS.

PHASING PLAN

for TWIN MASTS

SUSSEX COUNTY, DELAWARE
Prepared for: Twin Masts, LLC

Date:	3/12/24
Job Number:	G21029
Scale:	N.T.S.
Drawn By:	JPR
Designed By:	JPR
Approved By:	JPE

Sheet No.: 100

File Name: G21029-Phasing-Color

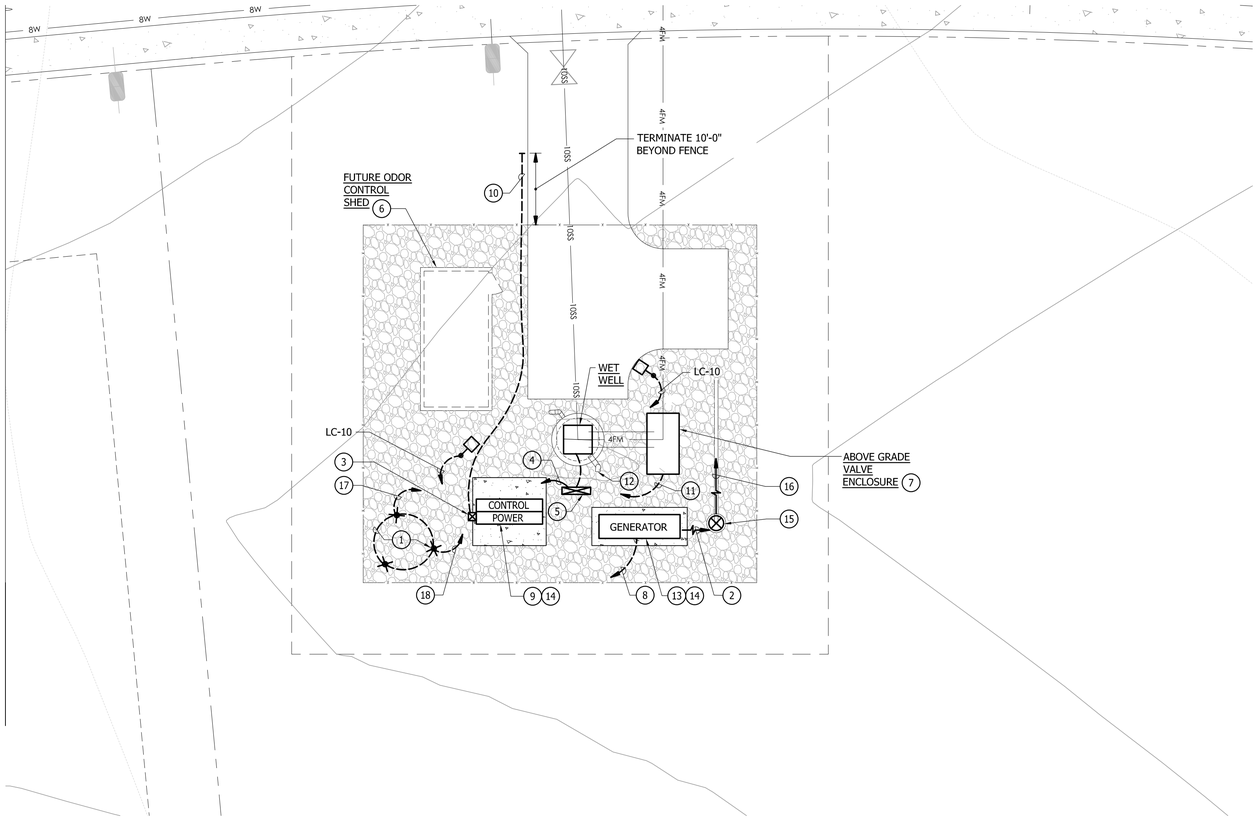

SITE PLAN - PUMP STATION

SCALE: 1" = 10'-0"

ELECTRICAL LEGEND

ABBREVIATIONS:

A.	AMP OR AMPERES
A.F.F.	ABOVE FINISHED FLOOR
BRKR.	BREAKER
C.	CONDUIT
CTD	COATED
CFM	CUBIT FEET/MINUTE
DEC	DELAWARE ELECTRICAL COOPERATIVE
DIA.	DIAMETER
DT	DISTRIBUTION TERMINAL
ELEV.	ELEVATION
G.F.I.	GROUND FAULT INTERRUPTER
GND.	GROUND
GRS.	GALVANIZED RIDID STEEL
H.O.A.	HAND OFF AUTOMATIC SELECTOR SWITCH
HP	HORSEPOWER
HZ	HERTZ
J.B.	JUNCTION BOX
K.V.A.	KILOVOLT AMPERES
K.W.	KILOWATTS
LED	LIGHT EMITTING DIODE
LR	LINE REACTOR
M.H.	MOUNTING HEIGHT - TO CENTER OF DEVICE OR EQUIPMENT UNLESS OTHERWISE INDICATED.
P.	POLE OR POLES
PCP	PUMP CONTROL PANEL
PLC	PROGRAMMABLE LOGIC CONTROLLER
PVC	POLYVINYL CHLORIDE
Ø	PHASE
RPM	REVOLUTIONS PER MINUTE
SCADA	SUPERVISORY CONTROL AND DATA ACQUISITION
SCH.	SCHEDULE
S.P.	STATIC PRESSURE
TYP.	TYPICAL
UG.	UNDERGROUND
UPS	UNINTERRUPTIBLE POWER SUPPLY
V.	VOLT OR VOLTS
VFD	VARIABLE FREQUENCY DRIVE CONTROLLER
WP.	WEATHERPROOF
WW.	WET WELL

SYMBOLS:

	FIXTURE - POLE MOUNTED LED LUMINAIRE - SEE DETAIL, SHEET NO. E-3.
$	SWITCH - SINGLE POLE, M.H. 4'-0".
	RECEPTACLE - 20A., 125V. - SIMPLEX, DUPLEX, DUPLEX G.F.I.
JB, J, J	JUNCTION BOX
#	MOTOR - NUMBER DENOTES HORSEPOWER.
	CONDUIT-EXPOSED
	CONDUIT-IN OR UNDER FLOOR SLAB OR UNDERGROUND.
	2 #12 & 1 #12 GND.- 3/4" C. UNLESS OTHERWISE NOTED.
	HOMERUN TO PANEL - NO. OF ARROWS INDICATES NO. OF CIRCUITSAND NO. OF CROSSLINES INDICATES NO. OF #12 CONDUCTORS.
#	DENOTES REFERENCE TO DRAWING NOTE.
CB	NEMA 1 ENCLOSED CIRCUIT BREAKER
	SPECIAL EQUIPMENT OR DEVICE AS NOTED.
T	THERMOSTAT
T	THERMAL MANUAL MOTOR STARTER
ATS	AUTOMATIC TRANSFER SWITCH - NEMA 1 ENCLOSED
PCP	PUMP CONTROL PANEL
TVSS	TRANSIENT VOLTAGE SURGE SUPPRESSOR
M	SERVICE METER
LR	FLOW METER
VFD	VARIABLE FREQUENCY DRIVE CONTROLLER
LR	5% LINE REACTOR
DT	DISTRIBUTION TERMINAL
AD	AUTOMATIC TELEPHONE DIALER
UPS	UNINTERRUPTIBLE POWER SUPPLY
VM	VOLUME MONITOR
OIT	OPERATORS INTERFACE TERMINAL
PR	PAPERLESS RECORDER
GA	GAS (HYDROGEN SULFIDE) ANALYZER
GS	GAS (HYDROGEN SULFIDE) SENSOR
GB	GROUND BUS
	DENOTES GROUND CONNECTION.

PROFESSIONAL CERTIFICATION:
I HEREBY CERTIFY THAT THESE DOCUMENTS WERE PREPARED OR APPROVED BY ME, AND THAT I AM A DULY LICENSED PROFESSIONAL ENGINEER UNDER THE LAWS OF THE STATE OF DELAWARE, LICENSE No. 17123, EXPIRATION DATE: 06/30/2024.

SHEET NOTES:

1. GROUND GRID CONSISTING OF THREE (3) DRIVEN GROUND RODS (3/4"DIA.X10'-0" LONG, ONE PIECE COPPER CLAD STEEL) INTERCONNECTED WITH #1/0 BARE COPPER CONDUCTOR. ALL UG. CONNECTIONS SHALL BE EXOTHERMIC WELDED.
2. DIRECTION OF ENGINE EXHAUST & RADIATOR DISCHARGE.
3. SERVICE METER & SERVICE DISCONNECT - MOUNT ON EXTERIOR OF SERVICE EQUIPMENT CABINET UTILIZING VERTICAL ALUMINUM CHANNEL SUPPORTS (MINIMUM 1-1/2" SQUARE x 12 GAUGE) SECURED WITH STAINLESS STEEL THRU-BOLT ASSEMBLIES.
4. PUMP MOTOR & LEVEL SENSING CONDUITS TO SERVICE EQUIPMENT CABINET VIA EQUIPMENT MOUNTING PEDESTAL. SEE SINGLE LINE DIAGRAM, SHEET NO. E-2.
5. EQUIPMENT MOUNTING PEDESTAL - REFER TO DETAIL, THIS SHEET & SINGLE LINE DIAGRAM, SHEET NO. E-2.
6. REFER TO SINGLE LINE DIAGRAM, SHEET NO. E-2 FOR FUTURE ELECTRICAL POWER SUPPLY PROVISIONS.
7. FURNISH & INSTALL TWO (2) UTILITY HEATERS, LOCATED ON OPPOSITE WALLS OF THE ENCLOSURE. SEE SINGLE LINE DIAGRAM, SHEET NO. E-2, FOR ELECTRICAL CONNECTIONS. HEATERS SHALL BE 500 WATT, 120 VOLT, WITH INTEGRAL LINE VOLTAGE THERMOSTAT (40°F TO 70°F RANGE), FURNISH Q MARK CATALOG NO. WHT500, OR EQUAL.
8. GENERATOR SUPPLY, CONTROL, ALARM & AUXILIARY POWER CIRCUITS TO SERVICE EQUIPMENT CABINET - SEE SINGLE LINE DIAGRAM, SHEET NO. E-2.
9. FREE STANDING, PAD MOUNTED SERVICE EQUIPMENT CABINET "SEC". SEE DETAIL/ ELEVATION, SHEET NO. E-2.
10. 4" C. (SCHEDULE 80 PVC) TURNOUT FOR INCOMING 480/277V., 3Φ, 4 WIRE POWER CO. SERVICE CONDUCTORS.
11. HEATER CIRCUITS & FLOW METER SIGNAL CONDUITS TO SERVICE EQUIPMENT CABINET - SEE SINGLE LINE DIAGRAM, SHEET NO. E-2.
12. AIR SUPPLY PIPE FOR FUTURE WET WELL VENT FAN. SEE SINGLE LINE DIAGRAM, SHEET NO. E-2, FOR FUTURE ELECTRICAL CONNECTION PROVISIONS.
13. PAD MOUNTED & ENCLOSE DIESEL ENGINE DRIVEN GENERATOR SET - SEE SINGLE LINE DIAGRAM, SHEET NO. E-2.
14. SEE CONCRETE PAD DETAIL, SHEET NO. E-3.
15. SCADA ANTENNA POLE - SEE POLE/FOUNDATION DETAIL, SHEET NO. E-3. SEE SINGLE LINE DIAGRAM, SHEET NO. E-2 FOR CONDUIT FROM S.E.C..
16. POLE HINGE DIRECTION FOR LAY DOWN.
17. 1 #2 - 3/4" C. TO S.E.C. GROUND BUS.
18. 1 #2 - 3/4" C. TO GENERATOR PAD RE-BAR & GENERATOR SKID.

SCALE: 1" = 10'-0"

10 0 10 20

Gipe Associates, Inc.
CONSULTING ENGINEERS
1220 East Joppa Road, Suite 102
Towson, Maryland 21286
Baltimore, Maryland
Easton, Maryland
www.gipe.net
410.832.2420
410.822.8688
W.O.# 24030

"THIS DRAWING AND THE DESIGN AND CONSTRUCTION FEATURES DISCLOSED ARE PROPRIETARY TO GIPE ASSOCIATES, INC. AND SHALL NOT BE ALTERED OR REUSED IN WHOLE OR IN PART WITHOUT THE EXPRESS WRITTEN PERMISSION OF GIPE ASSOCIATES, INC. Copyright © 2024"

solutions
Integrated Planning
Engineering & Management, LLC
303 North Bedford Street
Georgetown, DE 19947
T. 302.297.9215
3003 Merritt Mill Road
Salisbury, MD 21804
T. 410.572.8833
www.solutionsipem.com
Copyright © 2023

DINA M. DIXON
LICENSE
No. 17123
PROFESSIONAL ENGINEER

Seal
Date: / /24

REVISIONS

NO.	DATE	DESCRIPTION
.	.	.

PUMP STATION SITE PLAN & LEGEND
for
TWIN MASTS
SUSSEX COUNTY, DELAWARE
Prepared for: Twin Masts, LLC

Date:	6/24
Job Number:	G21029
Scale:	AS SHOWN
Drawn By:	JLP
Designed By:	DKJ
Approved By:	DKJ

Sheet No.: E-1

File Name: G21029-PUMPSTAITON

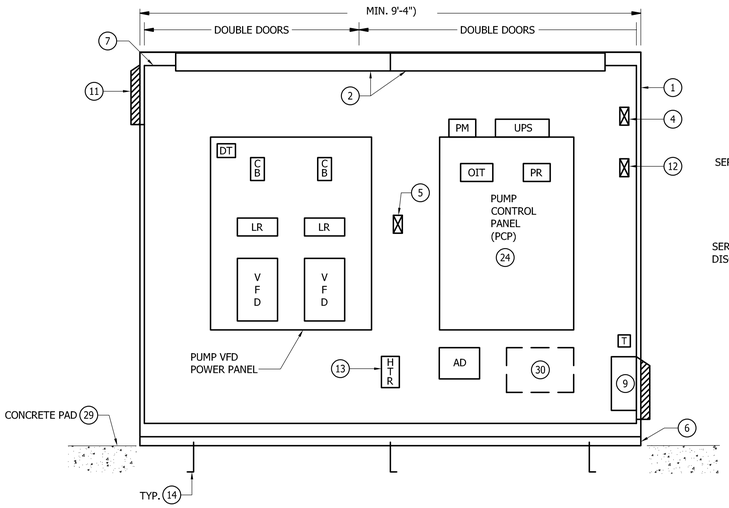

POWER SIDE

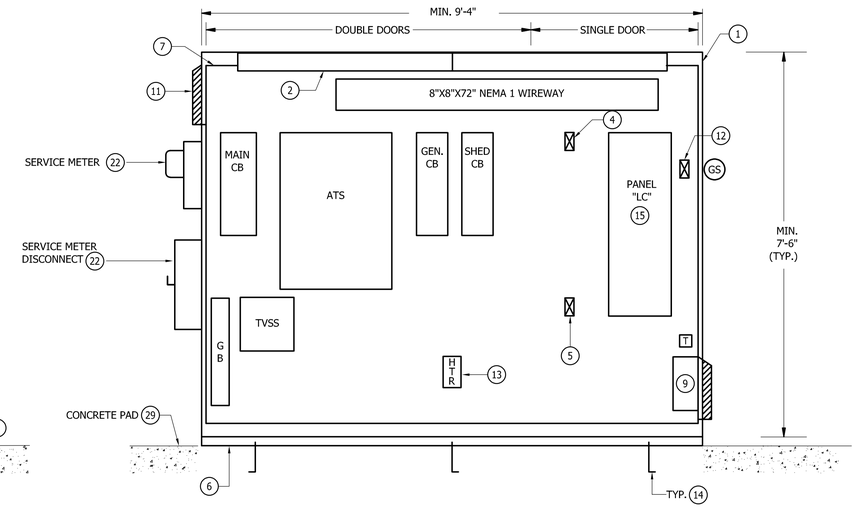

CONTROL SIDE

DETAIL - ELEVATION OF SERVICE EQUIPMENT CABINET

SCALE: 3/4"=1'-0"

NOTE:
1. MULTI-DOOR, FRONT/REAR ACCESS CABINET-48" TOTAL DEPTH.
2. INNER VERTICAL DOOR SUPPORTS SHALL BE REMOVABLE.

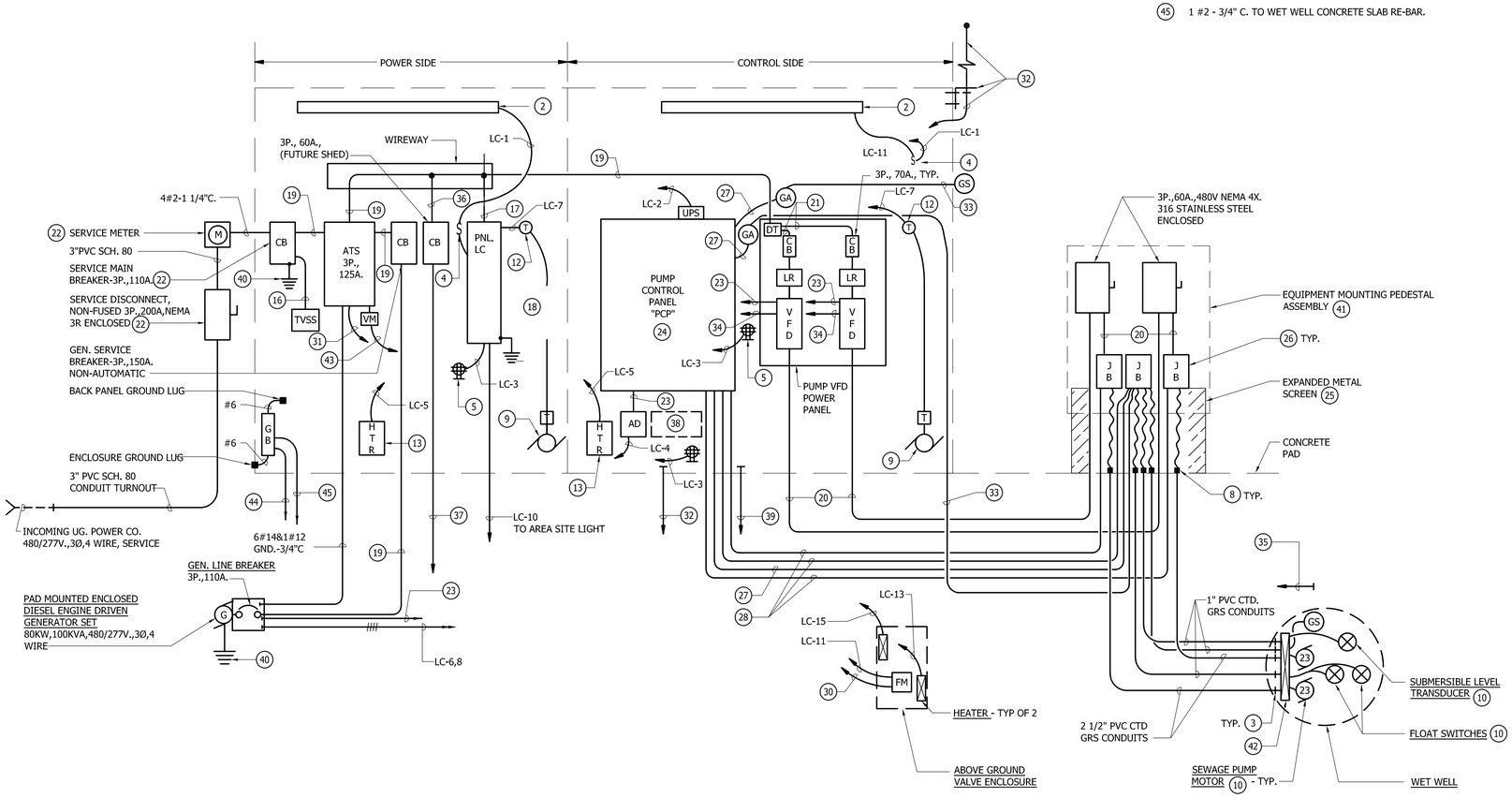

ELECTRICAL SYSTEM SINGLE LINE DIAGRAM

SHEET NOTES:

1. SERVICE EQUIPMENT CABINET, MINIMUM SIZE AS INDICATED - SEE SPECIFICATIONS SECTION 16100.
2. 48" LED LIGHT FIXTURE. MOUNT TOWARDS FRONT OF CABINET.
3. TERMINATE CONDUIT 4" INSIDE WET WELL. PROVIDE INSULATED TYPE BUSHING & STAINLESS STEEL CABLE STRAIN RELIEF GRIP. REFER TO TYPICAL DETAIL, SHEET NO. E-3.
4. LIGHT SWITCH FOR INTERIOR CABINET LIGHTS.
5. DUPLEX G.F.I. RECEPTACLE.
6. 1 1/2" x 3" STAINLESS STEEL BASE CHANNELS, FULL LENGTH FRONT AND BACK. PROVIDE FINISH TO MATCH CABINET.
7. WHITE FINISHED INTERIOR MOUNTING BACK PANEL.
8. CONDUIT SEALING BUSHINGS WITH GLAND LOCKING COLLAR, OZ GEDNEY TYPE CS BG, OR EQUAL.
9. COOLING AIR FAN PACKAGE: 560 CFM, 1650 RPM, 115V., 1Ø, 35 WATTS COMPLETE W/STAINLESS STEEL GRILLE, ALUMINUM AIR FILTER, COMPOSITE AIR PLENUM & COMPOSITE FINGER GUARD. FURNISH HOFFMAN CATALOG NO. A-PA10AXFN, OR EQUAL.
10. WITH INTEGRAL CABLE(S) COMPLETE TO JB.
11. AIR EXHAUST GRILL ASSEMBLY: CONSISTING OF 11.62" x 13.00" STAINLESS STEEL GRILLE, ALUMINUM AIR FILTER & MOUNTING HARDWARE. FURNISH HOFFMAN CATALOG NO. A-EXGR10, OR EQUAL.
12. COOLING AIR FAN THERMOSTAT: ADJUSTABLE RANGE OF 70° F TO 140° F, ANODIZED ALUMINUM HOUSING, RATED 12.5 AMPS AT 120VOLT. FURNISH HOFFMAN CATALOG NO. D-TEMA, OR EQUAL.
13. HEATER: 400 WATTS, 115V., 1Ø, ANODIZED ALUMINUM HOUSING WITH INTEGRAL THERMOSTAT & FAN. FURNISH HOFFMAN CATALOG NO. D-AH4001B., OR EQUAL.
14. 3/4" DIA. x 10" LONG "L" STAINLESS STEEL ANCHOR BOLT ASSEMBLY, FRONT AND BACK, SET IN CONCRETE PAD.
15. SEE PANEL SCHEDULE, SHEET NO. E-3 FOR BRANCH BREAKER SIZES & USAGE.
16. 4 #8 & 1 #8 GND. - 3/4" C.
17. 3 #8 & 1 #10 GND. - 3/4" C.
18. 1 #6 - 3/4" C. TO GROUND GRID.
19. 4 #2 & 1 #8 GND. - 1 1/2" C.
20. 3 #8 & 1 #8 GND. - 3/4" C.
21. 3 #8 & 1 #8 GND.
22. SECURE TO CABINET UTILIZING VERTICAL CHANNEL SUPPORTS AS DESCRIBED IN NOTE 3, SHEET NO. E-1.
23. 14 #14 & 1 #12 GND. - 1 1/4" C. TO PCP/PLC.
24. PUMP CONTROL PANEL (PCP) - REFER TO SPECIFICATION SECTION, 16920.
25. PROVIDE STAINLESS STEEL, NO. 6 GAUGE MINIMUM, WIRE METAL MESH SCREEN TO ENCLOSE/PROTECT CABLES. ATTACH TO S.E.C. WITH STAINLESS STEEL HARDWARE. SUBMIT FABRICATION DRAWINGS FOR REVIEW PRIOR TO CONSTRUCTION.
26. 18" HIGH X 8" DEEP X 12" WIDE NEMA 4X JUNCTION BOX, STAINLESS STEEL CONSTRUCTION WITH HINGED LOCKABLE COVER, INTERIOR BACKPLATE WITH WHITE FINISH & SQUARE D TERMINAL BLOCKS FOR ALL INCOMING & OUT GOING WIRING
27. 2/C #18 SHIELDED CABLE IN 3/4" C. TO PCP/PLC.
28. 4 #14 & 1 #12 GND. - 3/4" C. TO PCP/PLC.
29. SEE TYP. CONCRETE PAD DETAIL, SHEET NO. E-3.
30. 2/C #18 SHIELDED CABLE IN 3/4"C. TO PCP/PLC.
31. 4 #14 & 1 #12 GND. - 3/4" C. TO PCP/PLC FOR ATS NORMAL POSITION & EMERGENCY POSITION STATUS SIGNALS.
32. CELLULAR ANTENNA BRACKET MOUNTED TO S.E.C. (STAINLESS STEEL ANGLE BRACKET THRU BOLT SECURED TO S.E.C. W/STAINLESS STEEL HARDWARE) WITH ANTENNA CABLE TO AUTO-DIALER.
33. 3/C #18 SHIELDED CABLE IN 3/4" C.
34. 3-2/C #18 SHIELDED CABLES IN 3/4" C. TO PCP/PLC.
35. PROVIDE 1" EMPTY CONDUIT WITH PULL LINE TO CONTROL SIDE OF S.E.C. TERMINATE WITHIN SIX INCHES OF THE AIR SUPPLY PIPE AT THE WET WELL FOR FUTURE ELECTRICAL CONNECTIONS.
36. 4 #6 & 1 #10 GND. - 1" C.
37. 1 1/2" EMPTY CONDUIT WITH PULL LINE. EXTEND TO WITHIN THREE FEET OF THE FUTURE ODOR CONTROL SHED & TERMINATE FOR FUTURE ELECTRICAL CONNECTION.
38. ALLOW SPACE IN CABINET FOR FUTURE RADIO & ANTENNA CABLE LIGHTNING ARRESTOR.
39. 1 1/4" C. TO SCADA POLE FOR FUTURE ANTENNA CABLE.
40. 1 #4 - 3/4" C. TO GROUND GRID.
41. REFER TO DETAIL, SHEET NO. E-3.
42. PROVIDE SIX HOOK, STAINLESS CABLE BRACKET ASSEMBLY CONERY MFG. INC. U-TYPE NO. 6 AHB, OR EQUAL. SECURE TO CONCRETE FACE UTILIZING CONERY STAINLESS STEEL WEDGE ANCHORS. COORDINATE INSTALLATION WITH STRUCTURAL ENGINEER. SUPPORT CABLES UTILIZING APPROPRIATE STAINLESS STEEL CABLE STRAIN RELIEF DEVICES W/EYE HOOKS.

SHEET NOTES CONTINUED:

43. 2 #14 & 1 #12 GND. - 3/4" C. TO PCP/PLC FOR STATION LOSS OF POWER ALARM.
44. 1 #2 - 3/4" C. TO GROUND GRID.
45. 1 #2 - 3/4" C. TO WET WELL CONCRETE SLAB RE-BAR.

PROFESSIONAL CERTIFICATION:
I HEREBY CERTIFY THAT THESE DOCUMENTS WERE PREPARED OR APPROVED BY ME, AND THAT I AM A DULY LICENSED PROFESSIONAL ENGINEER UNDER THE LAWS OF THE STATE OF DELAWARE, LICENSE No. 17123, EXPIRATION DATE: 06/30/2024.

solutions
Integrated Planning Engineering & Management, LLC
303 North Bedford Street
Georgetown, DE 19947
T. 302.297.9215
3003 Merritt Mill Road
Salisbury, MD 21804
T. 410.572.8833
www.solutionsipem.com

Copyright © 2023

DINA M. DIXON LICENSE No. 17123 PROFESSIONAL ENGINEER

Seal

Date: / /24

NO.	DATE	DESCRIPTION
.	.	.

REVISIONS

S.E.C. DIAGRAM & DETAIL

for

TWIN MASTS

SUSSEX COUNTY, DELAWARE
Prepared for: Twin Masts, LLC

Date:	6/24
Job Number:	G21029
Scale:	AS SHOWN
Drawn By:	JLP
Designed By:	DKJ
Approved By:	DKJ

Sheet No.: E-2

File Name: G19087-pump

Gipe Associates, Inc.
CONSULTING ENGINEERS
www.gipe.net
1220 East Joppa Road, Suite 102
Towson, Maryland 21286
Baltimore, Maryland 410.832.2420
Easton, Maryland 410.822.8688
W.O.# 24030

"THIS DRAWING AND THE DESIGN AND CONSTRUCTION FEATURES DISCLOSED ARE PROPRIETARY TO GIPE ASSOCIATES, INC. AND SHALL NOT BE ALTERED OR REUSED IN WHOLE OR IN PART WITHOUT THE EXPRESS WRITTEN PERMISSION OF GIPE ASSOCIATES, INC. Copyright © 2024"

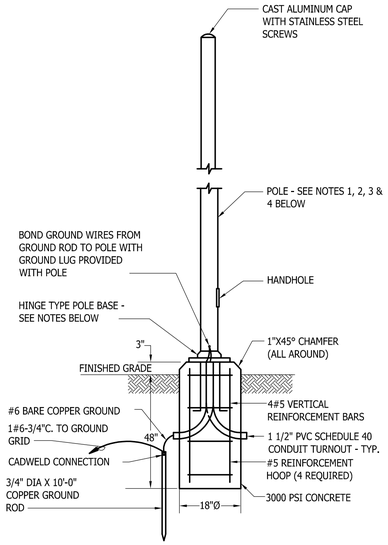

DETAIL - SCADA ANTENNA POLE/FOUNDATION

SCALE: NONE

NOTES:

1. POLE HEIGHT SHALL BE 20'.
2. POLE SHALL BE HINGED ALUMINUM.
3. MOUNTING STUDS SHALL BE POURED INTO CONCRETE BASE PER MANUFACTURERS RECOMMENDATIONS. LAGS OR DRIVE PINS WILL NOT BE PERMITTED.
4. FURNISH LITHONIA LIGHTING POLE NO. RSAH 205C, OR EQUAL.

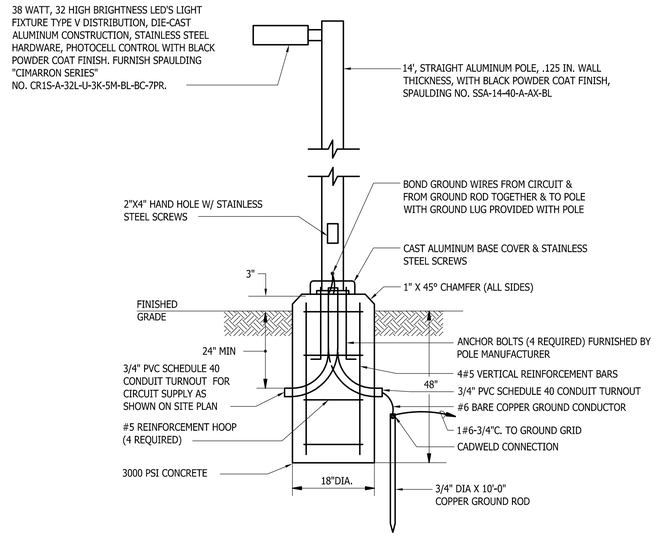

DETAIL - LIGHT FIXTURE AND POLE/FOUNDATION

SCALE: NONE

PANEL SCHEDULE : "LC" 240/120V., 1 PHASE, 3 WIRE (MINI POWER ZONE, REFER TO SPEC SECTION 16100) 100 A. BUS CAPACITY 80 A. MAIN BREAKER

CIRC. NO.	FOR	BREAKERS FRM.	BREAKERS P	BREAKERS TRIP	CIRC. NO.	FOR	BREAKERS FRM.	BREAKERS P	BREAKERS TRIP
1	S.E.C. LIGHTS	100	1	20	2	PCP	100	1	20
3	S.E.C. RECEPTACLE	100	1	20	4	AUTO DIALER	100	1	20
5	S.E.C. HEATERS	100	1	20	6	GEN. BLOCK HEATER	100	1	20
7	S.E.C. COOLING FANS	100	1	20	8	GEN. BATTERY CHARGER	100	1	20
9	W.W. VENT FAN (FUTURE)	100	1	20	10	SITE LIGHTS	100	1	20
11	FLOW MTRG. SYS.	100	1	20	12	SPARE	100	1	20
13	VALVE ENCL. HEATER	100	1	20	14	SPARE	100	1	20
15	VALVE ENCL. HEATER	100	1	20	16	SPACE W/BUS	-	1	-

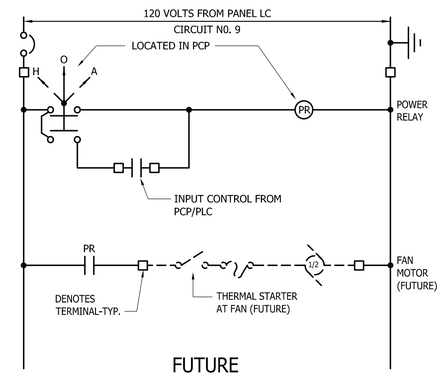

FUTURE WET WELL VENTILATION FAN CONTROL DIAGRAM

PROFESSIONAL CERTIFICATION:
I HEREBY CERTIFY THAT THESE DOCUMENTS WERE PREPARED OR APPROVED BY ME, AND THAT I AM A DULY LICENSED PROFESSIONAL ENGINEER UNDER THE LAWS OF THE STATE OF DELAWARE, LICENSE No. 17123, EXPIRATION DATE: 06/30/2024.

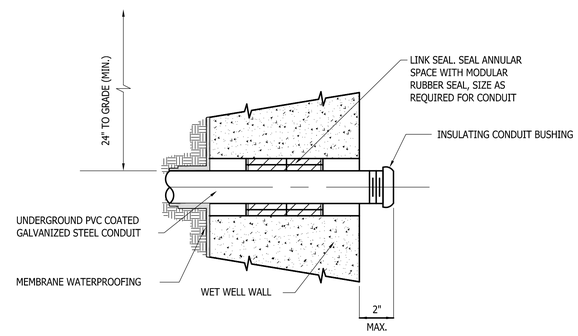

TYPICAL WET WELL ELECTRICAL CONDUIT ENTRY DETAIL

NOT TO SCALE

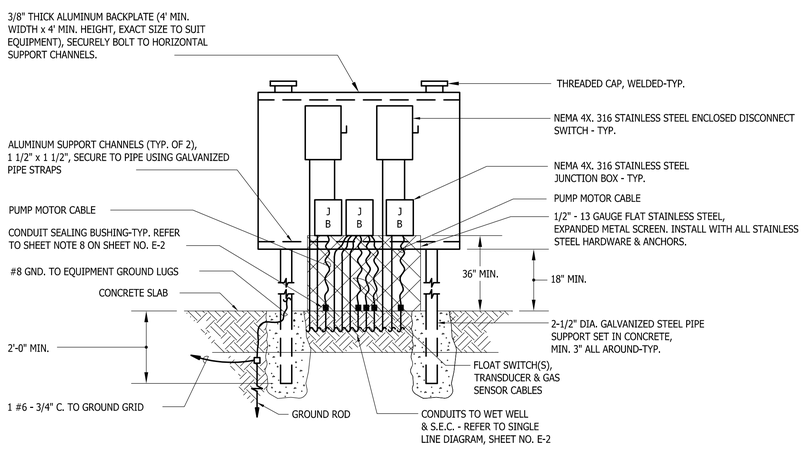

DETAIL - EQUIPMENT MOUNTING PEDESTAL

NO SCALE

NOTE:

BACK TO FACE TOWARDS WET WELL, FRONT TOWARDS THE S.E.C.

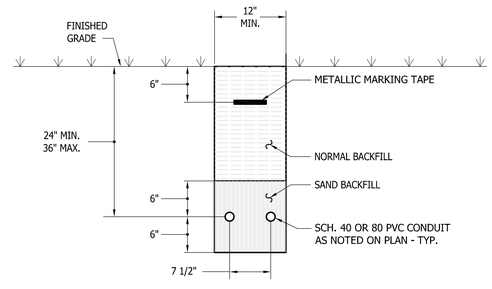

UNDERGROUND PVC CONDUIT INSTALLATION DETAIL

NOT TO SCALE

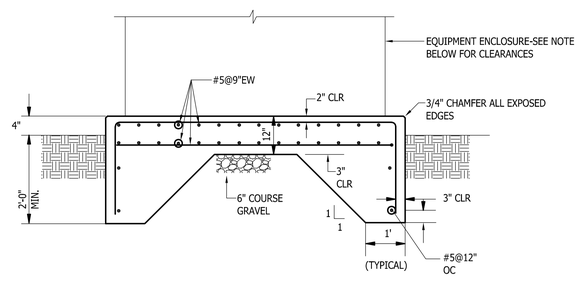

DETAIL - TYPICAL GENERATOR/SERVICE EQUIPMENT CONCRETE PAD

SCALE: NONE

CLEARANCES:

1. GENERATOR - 12" ON ALL SIDES.
2. SERVICE EQUIPMENT CABINET - 3'-0" ON CONTROL SIDE & POWER SIDE; 6" ON BOTH ENDS.
3. SECURE GENERATOR TO PAD (WITH STAINLESS STEEL ANCHOR BOLT ASSEMBLIES) AS RECOMMENDED BY THE GENERATOR MANUFACTURER.

Gipe Associates, Inc.
CONSULTING ENGINEERS
1220 East Joppa Road, Suite 102
Towson, Maryland 21286
Baltimore, Maryland 410.832.2420
Easton, Maryland 410.822.8688
www.gipe.net
W.O.# 24030

"THIS DRAWING AND THE DESIGN AND CONSTRUCTION FEATURES DISCLOSED ARE PROPRIETARY TO GIPE ASSOCIATES, INC. AND SHALL NOT BE ALTERED OR REUSED IN WHOLE OR IN PART WITHOUT THE EXPRESS WRITTEN PERMISSION OF GIPE ASSOCIATES, INC. Copyright © 2024"

solutions
Integrated Planning Engineering & Management, LLC
303 North Bedford Street
Georgetown, DE 19947
T. 302.297.9215
3003 Merritt Mill Road
Salisbury, MD 21804
T. 410.572.8833
www.solutionsipem.com

Copyright © 2023

DIANA M. DIXON LICENSE No. 17123 PROFESSIONAL ENGINEER

Seal

Date: / /24

REVISIONS

NO.	DATE	DESCRIPTION
.	.	.

DETAILS, DIAGRAM & SCHEDULE

for

TWIN MASTS

SUSSEX COUNTY, DELAWARE

Prepared for: Twin Masts, LLC

Date:	6/24
Job Number:	G21029
Scale:	AS SHOWN
Drawn By:	JLP
Designed By:	DKJ
Approved By:	DKJ

Sheet No.: E-3

File Name: G19087-pump