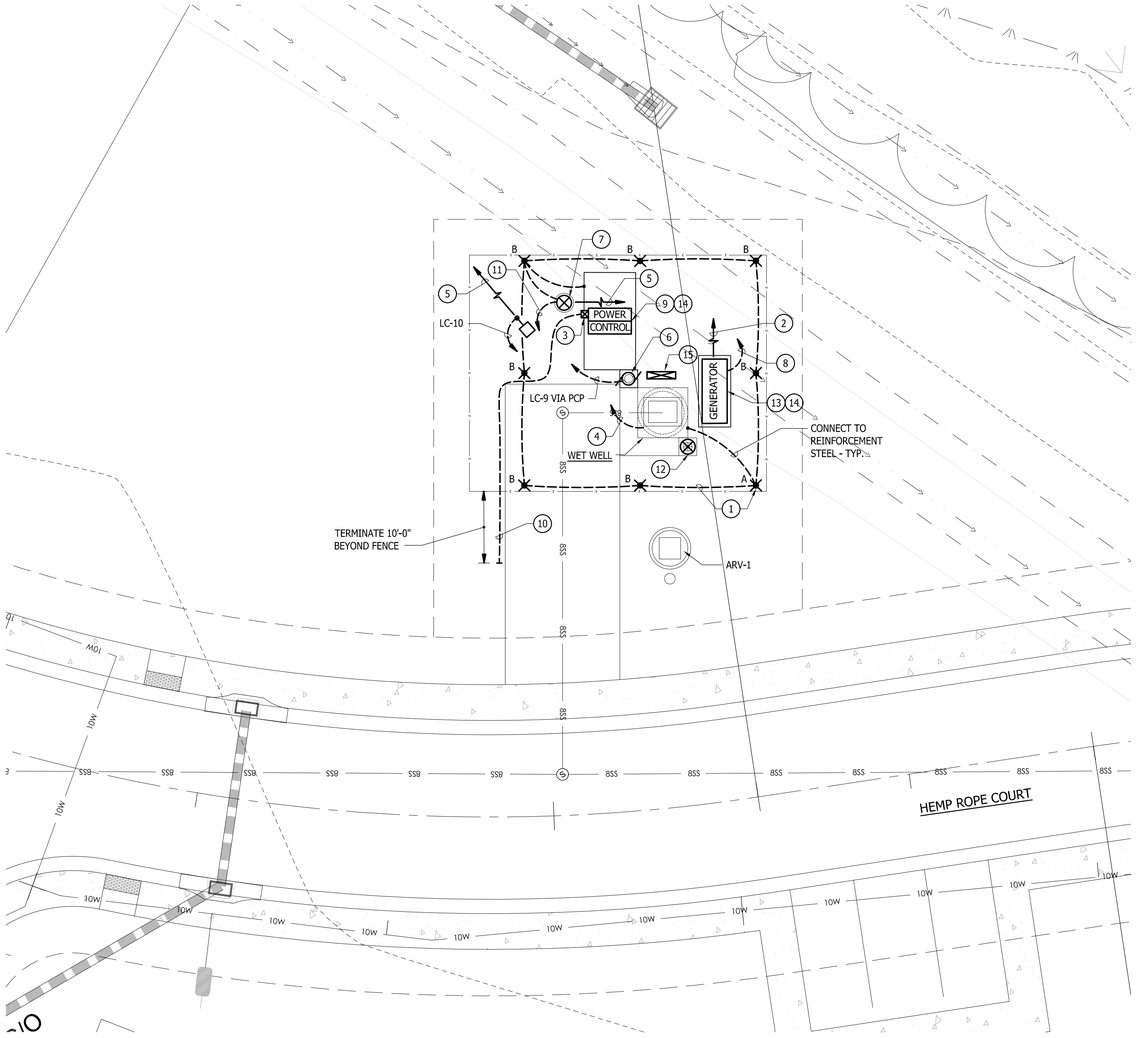

SITE PLAN

SCALE: 1" = 10'-0"

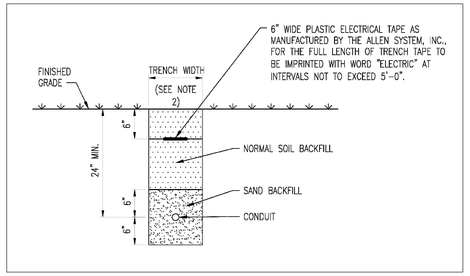

NOTES

1. TRENCH DETAIL IS APPLICABLE TO PUMP STATION SITES ONLY.
2. TRENCH WIDTH SHALL BE OUTSIDE DIAMETER OF CONDUIT PLUS 6 INCHES ON EITHER SIDE.
3. FOR MULTIPLE CONDUIT CONFIGURATIONS, PROVIDE 3" SEPARATION BETWEEN CONDUITS.

UNDER GROUND CONDUIT INSTALLATION SCED DETAIL E-5 (12/2021)

SHEET NOTES:

1. GROUND GRID CONSISTING OF EIGHT (8) DRIVEN GROUND RODS (3/4"DIA.X10'-0" LONG, ONE PIECE COPPER CLAD STEEL) INTERCONNECTED WITH #4/0 BARE COPPER CONDUCTOR. ALL UG. CONNECTIONS SHALL BE EXOTHERMIC WELDED.
2. DIRECTION OF ENGINE EXHAUST & RADIATOR DISCHARGE.
3. SERVICE METER - MOUNT ON EXTERIOR OF SERVICE EQUIPMENT CABINET UTILIZING VERTICAL ALUMINUM CHANNEL SUPPORTS (MINIMUM 1-1/2" SQUARE x 12 GAUGE) SECURED WITH STAINLESS STEEL THRU-BOLT ASSEMBLIES.
4. PUMP MOTOR & LEVEL SENSING CONDUITS TO SERVICE EQUIPMENT CABINET VIA EQUIPMENT MOUNTING PEDESTAL. SEE SINGLE LINE DIAGRAM, SHEET NO. E-2.
5. POLE HINGE DIRECTION.
6. WET WELL VENTILATION FAN - SEE SINGLE LINE CONTROL DIAGRAM, SHEET NO. E-2; SEE INSTALLATION DETAIL, SHEET NO. E-12.
7. SCADA ANTENNA POLE - SEE DETAIL, SHEET NO. E-12.
8. GENERATOR SUPPLY, CONTROL, ALARM & AUXILIARY POWER CIRCUITS TO SERVICE EQUIPMENT CABINET - SEE SINGLE LINE DIAGRAM, SHEET NO. E-2.
9. FREE STANDING, PAD MOUNTED SERVICE EQUIPMENT CABINET "SEC". SEE DETAIL/ ELEVATION, SHEET NO. E-2.
10. 4" C. (SCHEDULE 80 PVC) TURNOUT FOR INCOMING 240/120V., 1ø, 3 WIRE DELMARVA POWER SERVICE CONDUCTORS.
11. 1 1/4"C. W/ANTENNA CABLE TO PCP.
12. VENTILATION EXHAUST PIPE - SEE DETAIL, SHEET NO. E-12.
13. PAD MOUNTED & ENCLOSE DIESEL ENGINE DRIVEN GENERATOR SET - SEE SINGLE LINE DIAGRAM, SHEET NO. E-2.
14. SEE CONCRETE PAD DETAIL, SHEET NO. E-12.
15. EQUIPMENT MOUNTING PEDESTAL - REFER TO DETAIL, THIS SHEET & SINGLE LINE DIAGRAM, SHEET NO. E-2.

PROFESSIONAL CERTIFICATION:
I HEREBY CERTIFY THAT THESE DOCUMENTS WERE PREPARED OR APPROVED BY ME, AND THAT I AM A DULY LICENSED PROFESSIONAL ENGINEER UNDER THE LAWS OF THE STATE OF DELAWARE, LICENSE No. 17123, EXPIRATION DATE: 06/30/2026.

ELECTRICAL LEGEND

ABBREVIATIONS:

A.	AMP OR AMPERES
A.F.F.	ABOVE FINISHED FLOOR
BRKR.	BREAKER
C.	CONDUIT
CTD.	COATED
CFM	CUBIC FEET/MINUTE
DEC	DELAWARE ELECTRICAL COOPERATIVE
DIA.	DIAMETER
ELEV.	ELEVATION
GAI	GIPE ASSOCIATES, INC.
G.F.I.	GROUND FAULT INTERRUPTER
GND.	GROUND
GRS.	GALVANIZED RIGID STEEL
H.O.A.	HAND OFF AUTOMATIC
HP	HORSEPOWER
H.P.S.	HIGH PRESSURE SODIUM
HZ	HERTZ
J.B.	JUNCTION BOX
K.V.A.	KILOVOLT AMPERES
KW.	KILOWATTS
LED	LIGHT EMITTING DIODE
M.H.	MOUNTING HEIGHT - TO CENTER OF DEVICE OR EQUIPMENT UNLESS OTHERWISE INDICATED.
OIT	OPERATORS INTERFACE TERMINAL
P.	POLE OR POLES
PCP	PUMP CONTROL PANEL
PLC	PROGRAMMABLE LOGIC CONTROLLER
PVC	POLYVINYL CHLORIDE
Ø	PHASE
RPM	REVOLUTIONS PER MINUTE
SCADA	SUPERVISORY CONTROL AND DATA ACQUISITION
SCED	SUSSEX COUNTY ENGINEERING DEPARTMENT
SCH.	SCHEDULE
S.P.	STATIC PRESSURE
TYP.	TYPICAL
UG.	UNDERGROUND
UPS	UNINTERRUPTIBLE POWER SUPPLY
V.	VOLT OR VOLTS
WP.	WEATHERPROOF
WW.	WET WELL

SYMBOLS:

- POLE MOUNTED LED LUMINAIRE - SEE DETAIL, SHEET NO. E-7.
- GROUND ROD - LETTER (A OR B) DENOTES TYPE - REFER TO DETAIL, THIS SHEET.
- S — SWITCH - SINGLE POLE, M.H. 4'-0".
- RECEPTACLE - 20A., 125V. - SIMPLEX, DUPLEX, DUPLEX G.F.I.
- JB — JUNCTION BOX
- # — MOTOR - NUMBER DENOTES HORSEPOWER.
- CONDUIT-EXPOSED / CONDUIT-IN OR UNDER FLOOR SLAB OR UNDERGROUND. — 2 #12 & 1 #12 GND.- 3/4" C. UNLESS OTHERWISE NOTED.
- HOMERUN TO PANEL - NO. OF ARROWS INDICATES NO. OF CIRCUITS AND NO. OF CROSSLINES INDICATES NO. OF #12 CONDUCTORS.
- # — DENOTES REFERENCE TO DRAWING NOTE.
- CB — NEMA 1 ENCLOSED CIRCUIT BREAKER
- SPECIAL EQUIPMENT OR DEVICE AS NOTED
- T — THERMOSTAT
- T — THERMAL MANUAL MOTOR STARTER
- ATS — AUTOMATIC TRANSFER SWITCH - NEMA 1 ENCLOSED
- PCP — PUMP CONTROL PANEL
- TVSS — TRANSIENT VOLTAGE SURGE SUPPRESSOR
- M — SERVICE METER
- VFD — VARIABLE FREQUENCY DRIVE CONTROLLER
- LR — 5% LINE REACTOR
- SAFETY DISCONNECT SWITCH

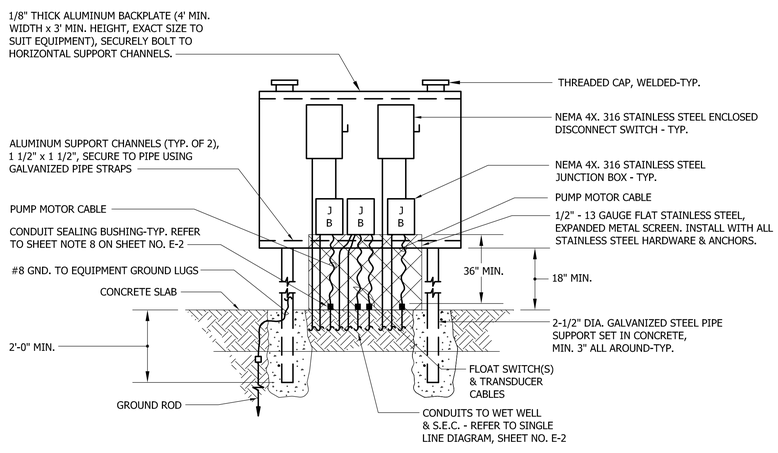

DETAIL - EQUIPMENT MOUNTING PEDESTAL

NO SCALE

NOTE:
BACK TO FACE TOWARDS WET WELL, FRONT TOWARDS THE S.E.C.

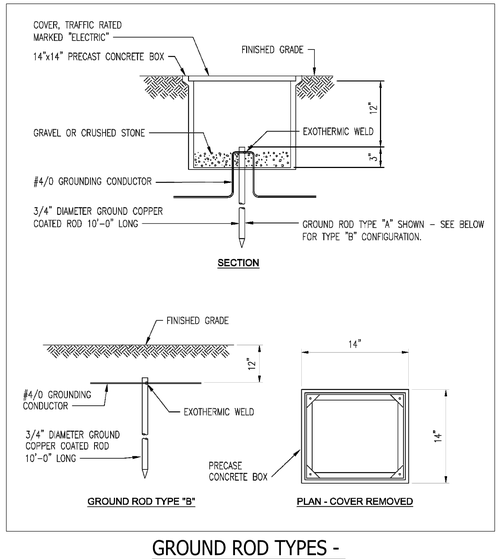

GROUND ROD TYPES - SCED DETAIL E-4 (12/2021)

SCALE: 1" = 10'-0"

10 0 10 20

Gipe Associates, Inc.
CONSULTING ENGINEERS
www.gipe.net
1220 East Joppa Road, Suite 102
Towson, Maryland 21286
Baltimore, Maryland 410.832.2420
Easton, Maryland 410.822.8688
W.O.# 24039

"THIS DRAWING AND THE DESIGN AND CONSTRUCTION FEATURES DISCLOSED ARE PROPRIETARY TO GIPE ASSOCIATES, INC. AND SHALL NOT BE ALTERED OR REUSED IN WHOLE OR IN PART WITHOUT THE EXPRESS WRITTEN PERMISSION OF GIPE ASSOCIATES, INC. Copyright © 2024"

solutions
Integrated Planning
Engineering & Management, LLC
303 North Bedford Street
Georgetown, DE 19947
T. 302.297.9215
3003 Merritt Mill Road
Salisbury, MD 21804
T. 410.572.8833
www.solutionsdpem.com

Copyright © 2022

DIANA M. DIXON
LICENSE No. 17123
DELAWARE PROFESSIONAL ENGINEER

Date: 8/6/2024

REVISIONS

NO.	DATE	DESCRIPTION
-	-	-

PUMP STATION SITE PLAN, LEGEND & DETAILS

for

LEEWARD CHASE

SUSSEX COUNTY, DELAWARE

Prepared for: Wakefield Development, LLC

Date:	8/24
Job Number:	G21074
Scale:	AS SHOWN
Drawn By:	JLP
Designed By:	DKJ
Approved By:	DKJ

Sheet No.: E-1

File Name: G19076-PUMPSTAITON

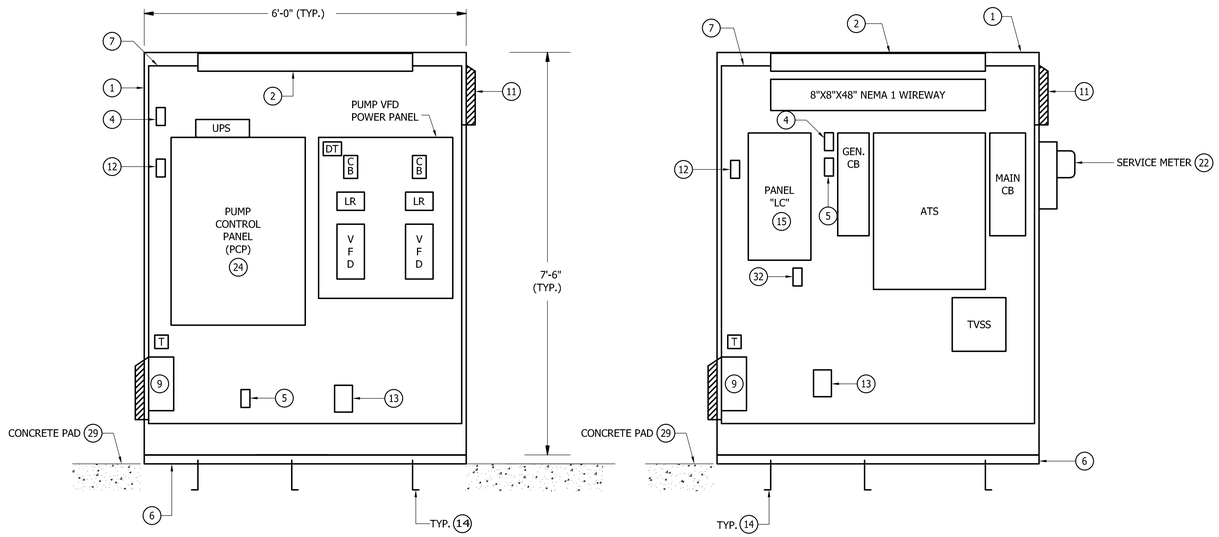

CONTROL SIDE

POWER SIDE

DETAIL - ELEVATION OF SERVICE EQUIPMENT CABINET

SCALE: 3/4"=1'-0"

NOTE:
FRONT/REAR ACCESS CABINET-48" TOTAL DEPTH.

NOTE:

CONTRACTOR SHALL PROVIDE ARC-FLASH LABELS FOR ALL EQUIPMENT BEING INSTALLED. LABELS SHALL INDICATE HAZARD LEVEL AND PPE REQUIREMENTS AS REQUIRED BY NFPA 70E AND IEEE 1584. REFER TO SPEC. SECTION 16460, OVER CURRENT PROTECTIVE DEVICE ARC-FLASH STUDY.

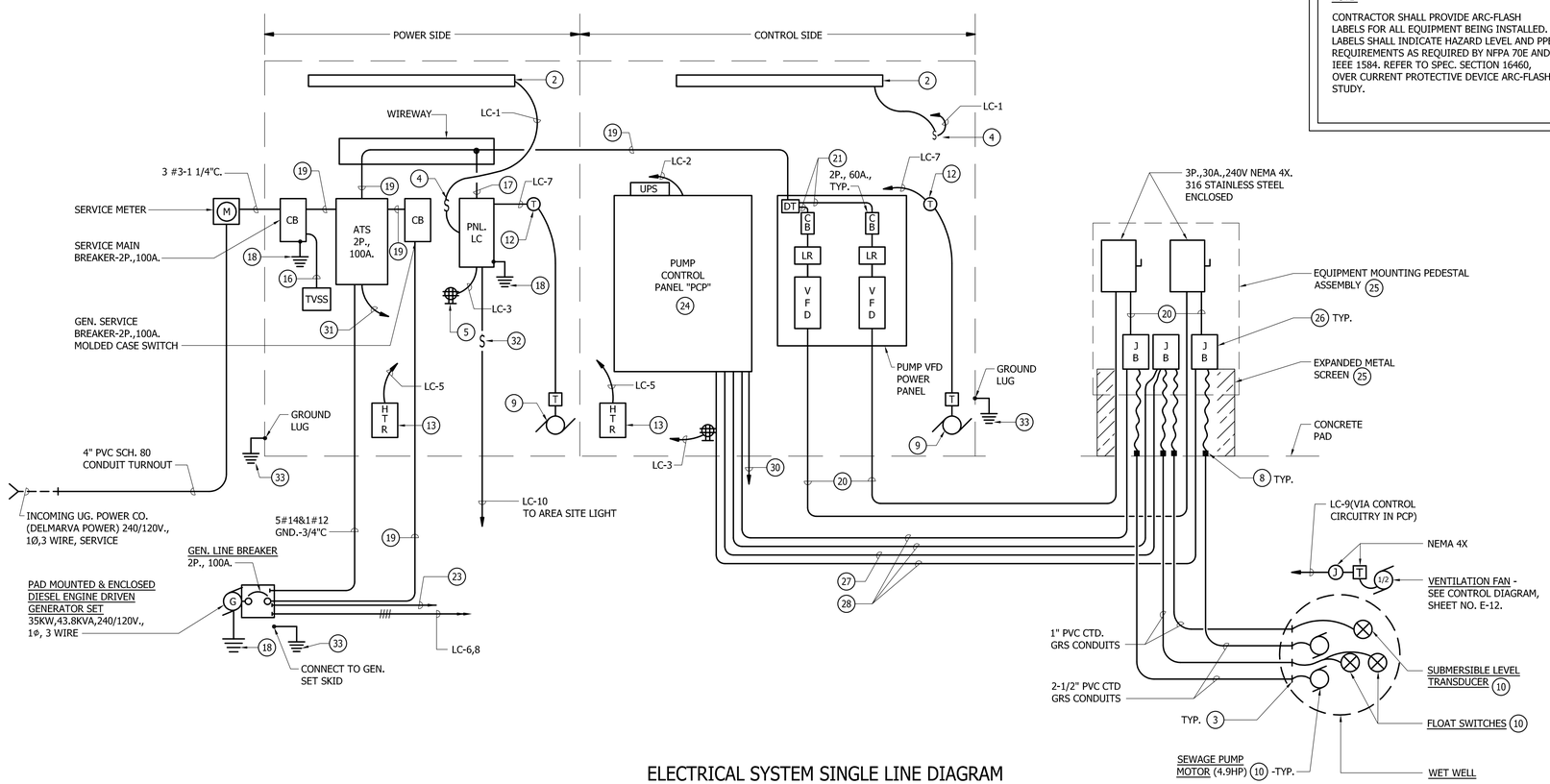

ELECTRICAL SYSTEM SINGLE LINE DIAGRAM

SCALE: 3/4" = 1'-0"

1 0 1 2 3

SHEET NOTES:

1. SERVICE EQUIPMENT CABINET, SIZED AS INDICATED - SEE SPECIFICATIONS.
2. 48" TWO LAMP LED FIXTURE. MOUNT TOWARDS FRONT OF CABINET.
3. TERMINATE CONDUIT 4" INSIDE WET WELL. PROVIDE INSULATED TYPE BUSHING & STAINLESS STEEL CABLE STRAIN RELIEF GRIP.
4. LIGHT SWITCH FOR INTERIOR CABINET LIGHTS.
5. DUPLEX G.F.I. RECEPTACLE.
6. 1 1/2" x 3" ALUMINUM BASE CHANNELS, FULL LENGTH FRONT AND BACK. PROVIDE FINISH TO MATCH CABINET.
7. WHITE FINISHED INTERIOR MOUNTING BACK PANEL.
8. CONDUIT SEALING BUSHINGS WITH GLAND LOCKING COLLAR, OZ GEDNEY TYPE CS BG, OR EQUAL.
9. COOLING AIR FAN PACKAGE: 560 CFM, 1650 RPM, 115V., 1Ø, 35 WATTS COMPLETE W/STAINLESS STEEL GRILLE, ALUMINUM AIR FILTER, COMPOSITE AIR PLENUM & COMPOSITE FINGER GUARD. FURNISH HOFFMAN CATALOG NO. A-PA10AXFN, OR EQUAL.
10. WITH INTEGRAL CABLE(S) COMPLETE TO JB.
11. AIR EXHAUST GRILL ASSEMBLY: CONSISTING OF 11.62" x 13.00" STAINLESS STEEL GRILLE, ALUMINUM AIR FILTER & MOUNTING HARDWARE. FURNISH HOFFMAN CATALOG NO. A-EXGR10, OR EQUAL.
12. COOLING AIR FAN THERMOSTAT: ADJUSTABLE RANGE OF 70° F TO 140° F, ANODIZED ALUMINUM HOUSING, RATED 12.5 AMPS AT 120VOLT. FURNISH HOFFMAN CATALOG NO. D-TEMA, OR EQUAL.
13. HEATER: 400 WATTS, 115V., 1Ø, ANODIZED ALUMINUM HOUSING WITH INTEGRAL THERMOSTAT & FAN. FURNISH HOFFMAN CATALOG NO. D-AH4001B., OR EQUAL.
14. 3/4" DIA. x 10" LONG "L" STAINLESS STEEL ANCHOR BOLT. ASSEMBLY, FRONT AND BACK, SET IN CONCRETE PAD.
15. SEE PANEL SCHEDULE, SHEET NO. E-12 FOR BRANCH BREAKER SIZES & USAGE.
16. 4 #8 & 1 #10 GND. - 1" C.
17. 3 #8 & 1 #10 GND. - 3/4" C.
18. 1 #6 - 3/4" C. TO GROUND GRID.
19. 3 #3 & 1 #8 GND. - 1 1/4" C.
20. 3 #10 & 1 #10 GND. - 3/4" C.
21. 2 #8 & 1 #8 GND.
22. SECURE TO CABINET UTILIZING VERTICAL CHANNEL SUPPORTS AS DESCRIBED IN NOTE 3, SHEET NO. E-1.
23. 5 #14 & 1 #12 GND. - 3/4" C. TO PCP.
24. PUMP CONTROL PANEL (PCP) - SEE SHEETS NO. E-3, THRU E-11, & SPECIFICATION SECTIONS 13318, 13320 AND 13440.
25. REFER TO DETAIL, SHEET NO. E-1.
26. 12" HIGH X 8" DEEP X 12" WIDE NEMA 4X JUNCTION BOX, STAINLESS STEEL CONSTRUCTION WITH HINGED LOCKABLE COVER, INTERIOR BACKPLATE WITH WHITE FINISH & SQUARE D TERMINAL BLOCKS FOR ALL INCOMING & OUT GOING WIRING
27. 3/C #18 SHIELDED CABLE IN 3/4"C. TO PCP.
28. 4 #14 & 1 #12 GND.-3/4"C. TO PCP.
29. SEE DETAIL, SHEET NO. E-12.
30. 1-1/4"C. W/ANTENNA CABLE TO SCADA ANTENNA.
31. 3#14 & 1#12 GND. - 3/4"C. TO PCP.
32. LIGHT SWITCH FOR AREA SITE LIGHT.
33. 1 #1/0 TO GROUND GRID.

PROFESSIONAL CERTIFICATION:
I HEREBY CERTIFY THAT THESE DOCUMENTS WERE PREPARED OR APPROVED BY ME, AND THAT I AM A DULY LICENSED PROFESSIONAL ENGINEER UNDER THE LAWS OF THE STATE OF DELAWARE, LICENSE No. 17123, EXPIRATION DATE: 06/30/2026.

solutions
Integrated Planning
Engineering & Management, LLC
303 North Bedford Street
Georgetown, DE 19947
T. 302.297.9215
3003 Merritt Mill Road
Salisbury, MD 21804
T. 410.572.8833
www.solutionsipem.com

Copyright © 2022

DIANA M. DIXON
LICENSE
No. 17123
DELAWARE
PROFESSIONAL ENGINEER

Date: 8/6/2024

NO.	DATE	DESCRIPTION
.	.	.

REVISIONS

SINGLE LINE DIAGRAM & ELEVATION

for

LEEWARD CHASE

SUSSEX COUNTY, DELAWARE

Prepared for: Wakefield Development, LLC

Date:	8/24
Job Number:	G21074
Scale:	AS SHOWN
Drawn By:	JLP
Designed By:	DKJ
Approved By:	DKJ

Sheet No.: E-2

File Name: G21074-PUMPSTAITON

Gipe Associates, Inc.
CONSULTING ENGINEERS
1220 East Joppa Road, Suite 102
Towson, Maryland 21286
Baltimore, Maryland
Easton, Maryland
www.gipe.net
410.832.2420
410.822.8688
W.O.# 24039

"THIS DRAWING AND THE DESIGN AND CONSTRUCTION FEATURES DISCLOSED ARE PROPRIETARY TO GIPE ASSOCIATES, INC. AND SHALL NOT BE ALTERED OR REUSED IN WHOLE OR IN PART WITHOUT THE EXPRESS WRITTEN PERMISSION OF GIPE ASSOCIATES, INC. Copyright © 2024"

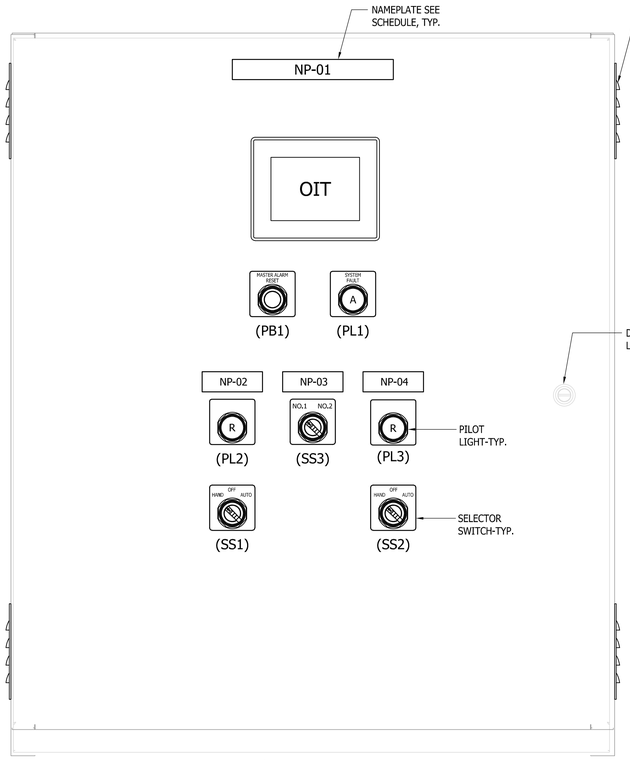

FRONT VIEW
(42"H x 30"W x 12"D)

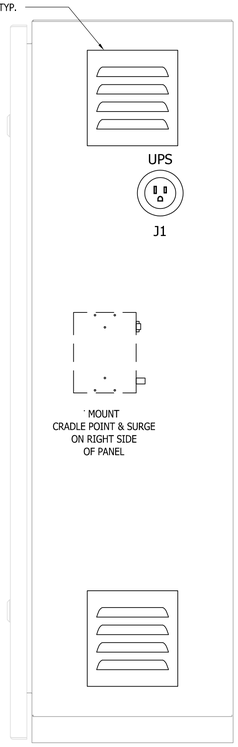

SIDE VIEW

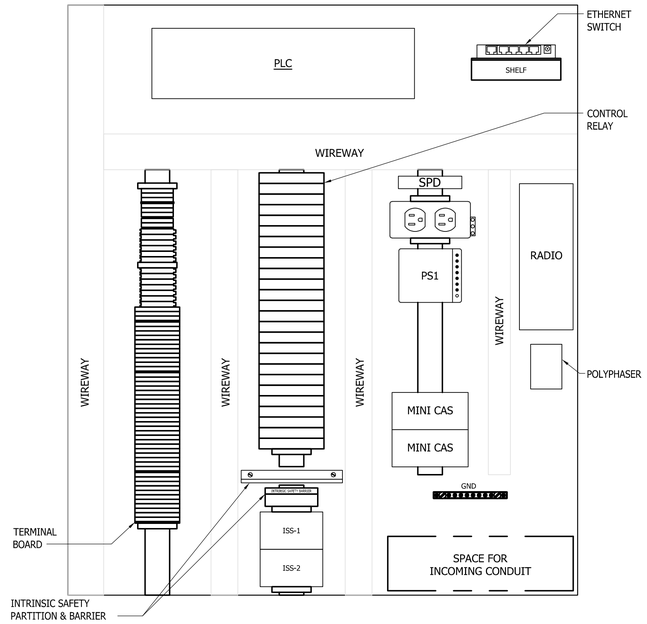

SUB-PANEL LAYOUT

DETAIL - PUMP CONTROL PANEL (PCP)
NOT TO SCALE

NAMEPLATE SCHEDULE				
REF.	NAME PLATE SIZE	TEXT HEIGHT	LINE	TEXT
NP-01	8" X 1"	1/2"	L1	PUMP CONTROL PANEL
NP-02	4" X 1"	3/8"	L1	PUMP NO.1
NP-03	4" X 1"	3/8"	L1	FLOAT SYSTEM
NP-04	4" X 1"	3/8"	L1	PUMP NO.2

NOTES:
1. NAMEPLATES: WHITE LAMICOID (2-PLY) WITH BLACK ENGRAVED LETTERS.
2. ATTACH WITH S.S. DRIVE SCREWS (COAT REAR OF SCREW WITH SILICON SEAL).

NOTES:

1. CONSTRUCTION: NEMA 12.
   A. ENCLOSURE BODY/DOOR: 14 GAUGE STEEL.
   B. SUB PANEL: 12 GAUGE CARBON STEEL.
2. FINISH:
   A. ENCLOSURE: ALL SURFACES ANSI 61 GRAY ENAMEL OVER PHOSPHATIZED SURFACES.
   B. SUB PANEL: WHITE ENAMEL.
3. PLASTIC WIRE WRAPS SHALL BE USED TO BUNDLE WIRES EXCEPT WITHIN WIRING DUCTS. BUNDLES WILL BE SECURELY FASTENED TO STEEL STRUCTURE.
4. WIRE TO BE STRANDED COPPER, INSULATED FOR NOT LESS THAN 600 VOLTS WITH A MOISTURE- RESISTANT & FLAME RETARDANT COVERING.
5. CONTROL CIRCUIT WIRING TO BE 16 AWG MINIMUM. ANALOG CIRCUIT WIRING TO BE 18 AWG TWISTED SHIELDED PAIRS.
6. BOTH ENDS OF ALL WIRES SHALL BE MARKED.
7.

WIRE COLORS:	
AC PHASE	BLACK
AC NEUTRAL	WHITE
AC CONTROL (PANEL POWERED)	GREEN
AC CONTROL (FIELD POWERED)	RED
DC CONTROL	YELLOW
(+)24VDC	ORANGE
(-)24VDC	BLUE
DC SIGNAL (ANALOG)	BROWN 2/C SHIELD (+) RED (-) BLACK

8. REFER TO SHEETS NO., E-4,E-5 & E-6 FOR CONTROL & PLC CONNECTION DIAGRAMS.
9. MOTOR PROTECTION RELAYS (MINI CAS) WILL BE FURNISHED BY THE PUMP MANUFACTURER & TURNED OVER TO THE PUMP CONTROL MANUFACTURER FOR INSTALLATION.

PROFESSIONAL CERTIFICATION:
I HEREBY CERTIFY THAT THESE DOCUMENTS WERE PREPARED OR APPROVED BY ME, AND THAT I AM A DULY LICENSED PROFESSIONAL ENGINEER UNDER THE LAWS OF THE STATE OF DELAWARE, LICENSE No. 17123, EXPIRATION DATE: 06/30/2026.

D.N.A. M. D. XON
LICENSE
No. 17123
DELAWARE
PROFESSIONAL ENGINEER

Date: 8/6/2024

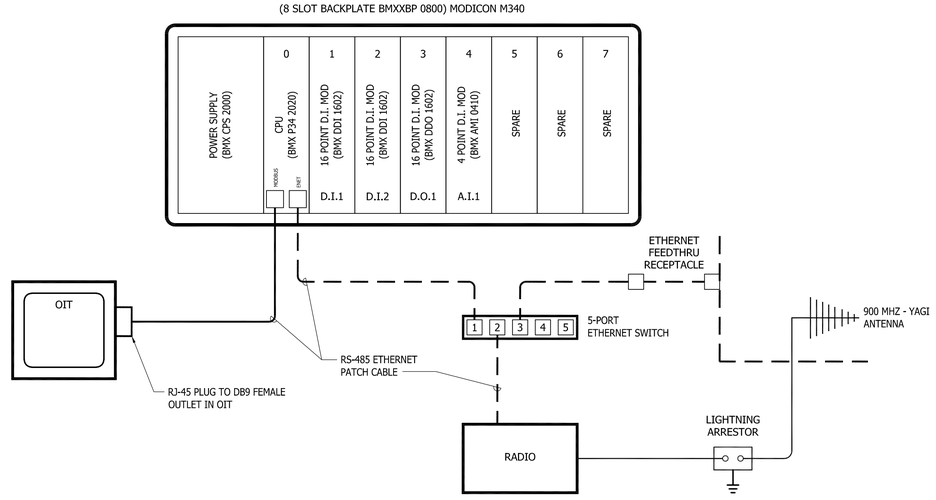

1 PLC BLOCK DIAGRAM

PUMP CONTROL PANEL EQUIPMENT LIST				
PART DESIGN.	QTY.	MANUFACTURER DESCRIPTION	MANUFACTURER	MODEL NO.
PCP	1	ENCLOSURE w/MOUNTING PANEL, 42"H x 30"W x 12"D	SCHAEFER'S	SPLN1-423012
PCP	1	SUB PANEL 38"H x 28.5"W	SCHAEFER'S	SPLN1P-4230
PCP	4	LOUVER PLATE KIT	SCHAEFER'S	SP-VK34
SPD	1	SURGE PROTECTION DEVICE	PHOENIX CONTACT	2856812
UPS	1	UNINTERRUPTIBLE POWER SUPPLY, 500VA	APC	BE550G
CR....	26	DPDT RELAY, 24VDC COIL, 2 FORM "C" CONTACTS	WEIDMULLER	8530631001
CRP	1	DPDT RELAY, 120VAC COIL, 2 FORM "C" CONTACTS	WEIDMULLER	8530661001
OIT	1	COLOR TOUCHSCREEN OIT, 5.7", 24VDC	TELEMECANIQUE	XBTGT2220
PLC	1	M340 8 SLOT RACK	MODICON	BMX XBP 0800
PLC	1	M340 POWER SUPPLY 120 VAC, 20W	MODICON	BMX CPS 2000
PLC	1	M340 PROCESSOR w/MODBUS PORT AND ETHERNET PORT	MODICON	BMX P34 2020
PLC	2	M340 16PT. 24VDC D.I. MODULE	MODICON	BMX DDI 1602
PLC	1	M340 16PT. 24VDC D.O. MODULE	MODICON	BMX DDO 1602
PLC	1	M340 4PT. A.I. MODULE	MODICON	BMX AMI 0410
-	4	20 PIN REMOVABLE TERMINAL BLOCK	MODICON	BMX FTB 2010
PS1	1	24VDC POWER SUPPLY	WOERTZ	45700K/24S
-	6	120VAC FUSE TERMINAL w/BLOWN FUSE INDICATOR	PHOENIX CONTACT	3046100
-	8	24VDC FUSE TERMINAL w/BLOWN FUSE INDICATOR	PHOENIX CONTACT	3046090
F1-3,6,11	5	FUSE, 2A	WOERTZ	WF520F/2
F4,5,12-18	9	FUSE, 1A	WOERTZ	WF520F/1
-	10	SINGLE LEVEL TERMINAL	PHOENIX CONTACT	3044102
-	3	SINGLE LEVEL END BARRIER	PHOENIX CONTACT	3047028
-	48	DOUBLE LEVEL TERMINAL	PHOENIX CONTACT	3044814
-	4	DOUBLE LEVEL END BARRIER	PHOENIX CONTACT	3047293
-	10	END STOP, CLEAR	PHOENIX CONTACT	800886
J2	1	DIN RAIL MOUNTED RECEPTACLE	WOERTZ	WRO-15STDRGY
CB	1	20A CIRCUIT BREAKER	WOERTZ	WCB-1P-2-20
SS4	1	2-POSITION SELECTOR SWITCH, 2 N.O./2 N.C. CONTACTS	SQUARE D	9001KS11BH2
SS1,SS2,SS3,SS5	3	3-POSITION SELECTOR SWITCH, 2 N.O./2 N.C. CONTACTS	SQUARE D	9001KS43BH2
USE w/SS1,SS2,SS3	3	1 N.O./1 N.C. CONTACT BLOCK	SQUARE D	9001KA1
PL1	1	PILOT LIGHT, AMBER	SQUARE D	9001KP1A31
PL2, PL3	2	PILOT LIGHT, RED	SQUARE D	9001KP1R31
USE w/PL2, PL3	2	PILOT LIGHT, NAMEPLATE ENGRAVED "RUN"	SQUARE D	9001KN124WP
USE w/SS1, SS2	2	3-POSITION SELECTOR SWITCH, NAMEPLATE ENGRAVED "HAND/OFF/AUTO"	SQUARE D	9001KN160WP
USE w/SS3	1	2-POSITION SELECTOR SWITCH, NAMEPLATE ENGRAVED "P1 SELECTED P2"	SQUARE D	9001KN199WP
USE w/PL1	1	PILOT LIGHT, NAMEPLATE ENGRAVED "SYSTEM FAULT"	SQUARE D	9001KN199WP
USE w/PB1	1	PUSH BUTTON, NAMEPLATE ENGRAVED "MASTER ALARM RESET"	SQUARE D	9001KN199WP
PB1	1	PUSH BUTTON, 1 N.O./1 N.C. CONTACT	SQUARE D	9001KR1BH13
EFTR	1	RJ45 FEEDTHRU RECEPTACLE/D-SIZED	NEUTRIK	NE8FDP
-	1	DATA-LINC 900 MHZ-YAGI ANTENNA w/MOUNTING BRACKET	DATA-LINC	A-Y11B
ISS-1, 2	2	INTRINSICALLY SAFE SWITCH	SYMCOM	ISS-100
ISB1	1	INTRINSIC SAFETY BARRIER	STAHL	9001/01-280-100-101
-	1	GROUND BAR	ILSCO	D167-6
LSH-1, LSL-1	2	FLOAT SWITCH w/40 FT. CABLE	REFER TO SPECIFICATIONS	
LT-1	1	LEVEL TRANSDUCER 0-5 PSIG w/SURGE PROTECTOR PSI	REFER TO SPECIFICATIONS	
PM	1	PHASE MONITORING RELAY	REFER TO SPECIFICATIONS	
RADIO	1	DATA-LINC	DATA-LINC	SRM 6230

solutions
Integrated Planning
Engineering & Management, LLC
303 North Bedford Street
Georgetown, DE 19947
T. 302.297.9215
3003 Merritt Mill Road
Salisbury, MD 21804
T. 410.572.8833
www.solutionsipem.com

Copyright © 2022

REVISIONS			
NO.	DATE	GAI REVISION	DESCRIPTION
1	8/30/24	-	-
-	-		

PCP DETAILS, SCHEDULES & DIAGRAM
for
LEEWARD CHASE
SUSSEX COUNTY, DELAWARE
Prepared for: Wakefield Development, LLC

Date:	8/24
Job Number:	G21074
Scale:	AS SHOWN
Drawn By:	JLP
Designed By:	DKJ
Approved By:	DKJ

Sheet No.: E-3

File Name: G21074-PUMPSTAITON

Gipe Associates, Inc.
CONSULTING ENGINEERS
www.gipe.net
1220 East Joppa Road, Suite 102
Towson, Maryland 21286
Baltimore, Maryland 410.832.2420
Easton, Maryland 410.822.8688
W.O.# 24039

"THIS DRAWING AND THE DESIGN AND CONSTRUCTION FEATURES DISCLOSED ARE PROPRIETARY TO GIPE ASSOCIATES, INC. AND SHALL NOT BE ALTERED OR REUSED IN WHOLE OR IN PART WITHOUT THE EXPRESS WRITTEN PERMISSION OF GIPE ASSOCIATES, INC. Copyright © 2024"

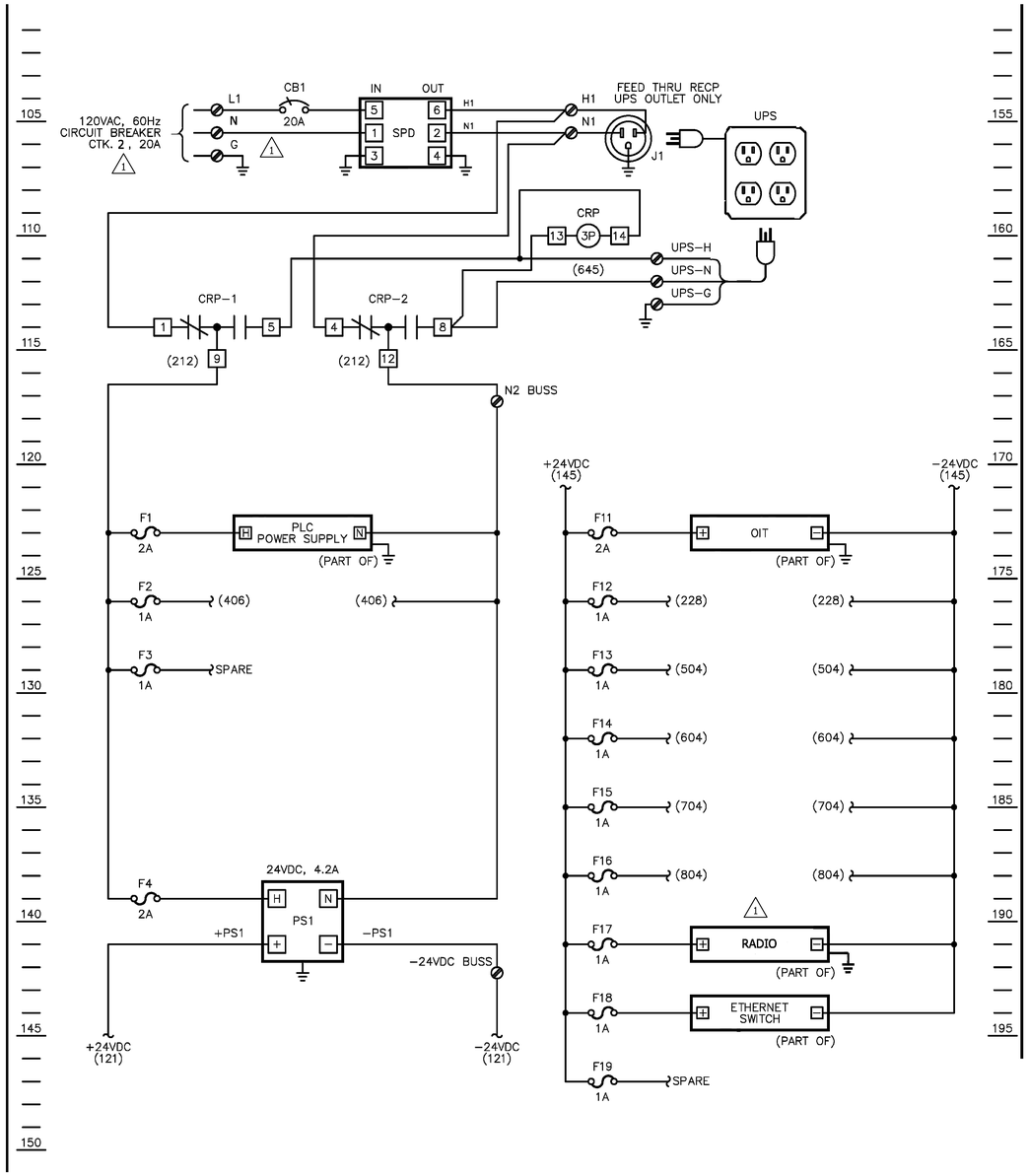

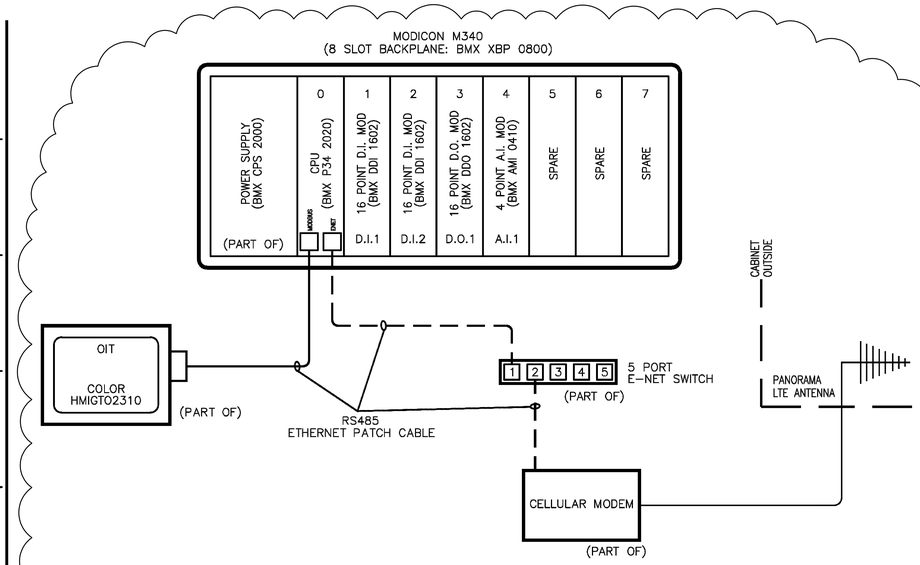

NOTES:

1. PLASTIC WIRE WRAPS SHALL BE USED TO BUNDLE WIRES EXCEPT WITHIN WIRING DUCTS, BUNDLES WILL BE SECURELY FASTENED TO STEEL STRUCTURE.
2. WIRE TO BE STRANDED COPPER, INSULATED FOR NOT LESS THAN 600 VOLTS WITH A MOISTURE-RESISTANT AND FLAME RETARDANT COVERING.
3. CONTROL CIRCUIT WIRING TO BE 16 AWG MINIMUM. ANALOG CIRCUIT WIRING TO BE 18 AWG TWISTED SHIELDED PAIRS.
4. WIRE NUMBERS ARE TO AGREE WITH THE TERMINAL NUMBERS UNLESS OTHERWISE SHOWN. ALL PLC INPUT & OUTPUT ADDRESS NUMBERS TO BE USED AS WIRE NUMBERS.
5. SPARE TERMINAL NUMBERS: BLANK
6. BOTH ENDS OF ALL WIRES SHALL BE MARKED PER WIRING DIAGRAMS.
7. WIRE COLORS

AC PHASE	BLACK
AC NEUTRAL	WHITE
GROUND	GREEN
AC CONTROL (PANEL POWERED)	RED
AC CONTROL (FIELD POWERED)	YELLOW
DC CONTROL	ORANGE
(+) 24VDC	BLUE
(-) 24VDC	BROWN
DC SIGNAL (ANALOG)	2/C SHIELD (+) RED (-) BLACK

RADIO SYSTEM UTILIZED FOR THIS PROJECT. REFER TO PLC BLOCK DIAGRAM, SHEET NO. E-3.

1

4. CELLULAR MODEM DEVICE SHALL BE CRADLE POINT PART #TB5-650C150M-NON. (PROVIDED BY SUSSEX COUNTY)
5. DETAILS I-10 THRU I-17 REPRESENT TYPICAL WIRING DIAGRAMS FOR A SINGLE PHASE PUMP STATION CONTROL PANEL. ANY DEVIATIONS NECESSARY DUE TO SPECIFIC PUMP STATION REQUIREMENTS MUST BE APPROVED BY SUSSEX COUNTY.
6. CONFIRM SERVICE AVAILABILITY WITH POWER COMPANY.
7. UPS SHALE BE PART SMT750C, AS SUPPLIED BY APC.

SCED DETAIL I-10 (4/25/2023)

PROFESSIONAL CERTIFICATION:
I HEREBY CERTIFY THAT THESE DOCUMENTS WERE PREPARED OR APPROVED BY ME, AND THAT I AM A DULY LICENSED PROFESSIONAL ENGINEER UNDER THE LAWS OF THE STATE OF DELAWARE, LICENSE No. 17123, EXPIRATION DATE: 06/30/2026.

solutions
Integrated Planning
Engineering & Management, LLC
303 North Bedford Street
Georgetown, DE 19947
T. 302.297.9215
3003 Merritt Mill Road
Salisbury, MD 21804
T. 410.572.8833
www.solutionsipem.com
Copyright © 2022

DINA M. DIXON
LICENSE
No. 17123
DELAWARE
PROFESSIONAL ENGINEER

Date: 8/6/2024

REVISIONS

NO.	DATE	DESCRIPTION
1	8/30/24	GAI REVISION

PCP DIAGRAMS
for
LEEWARD CHASE
SUSSEX COUNTY, DELAWARE
Prepared for: Wakefield Development, LLC

Date:	8/24
Job Number:	G21074
Scale:	AS SHOWN
Drawn By:	JLP
Designed By:	DKJ
Approved By:	DKJ

Sheet No.: E-4

File Name: G21074-PUMPSTAITON

Gipe Associates, Inc.
CONSULTING ENGINEERS
www.gipe.net
1220 East Joppa Road, Suite 102
Towson, Maryland 21286
Baltimore, Maryland 410.832.2420
Easton, Maryland 410.822.8688
W.O.# 24039

"THIS DRAWING AND THE DESIGN AND CONSTRUCTION FEATURES DISCLOSED ARE PROPRIETARY TO GIPE ASSOCIATES, INC. AND SHALL NOT BE ALTERED OR REUSED IN WHOLE OR IN PART WITHOUT THE EXPRESS WRITTEN PERMISSION OF GIPE ASSOCIATES, INC. Copyright © 2024"

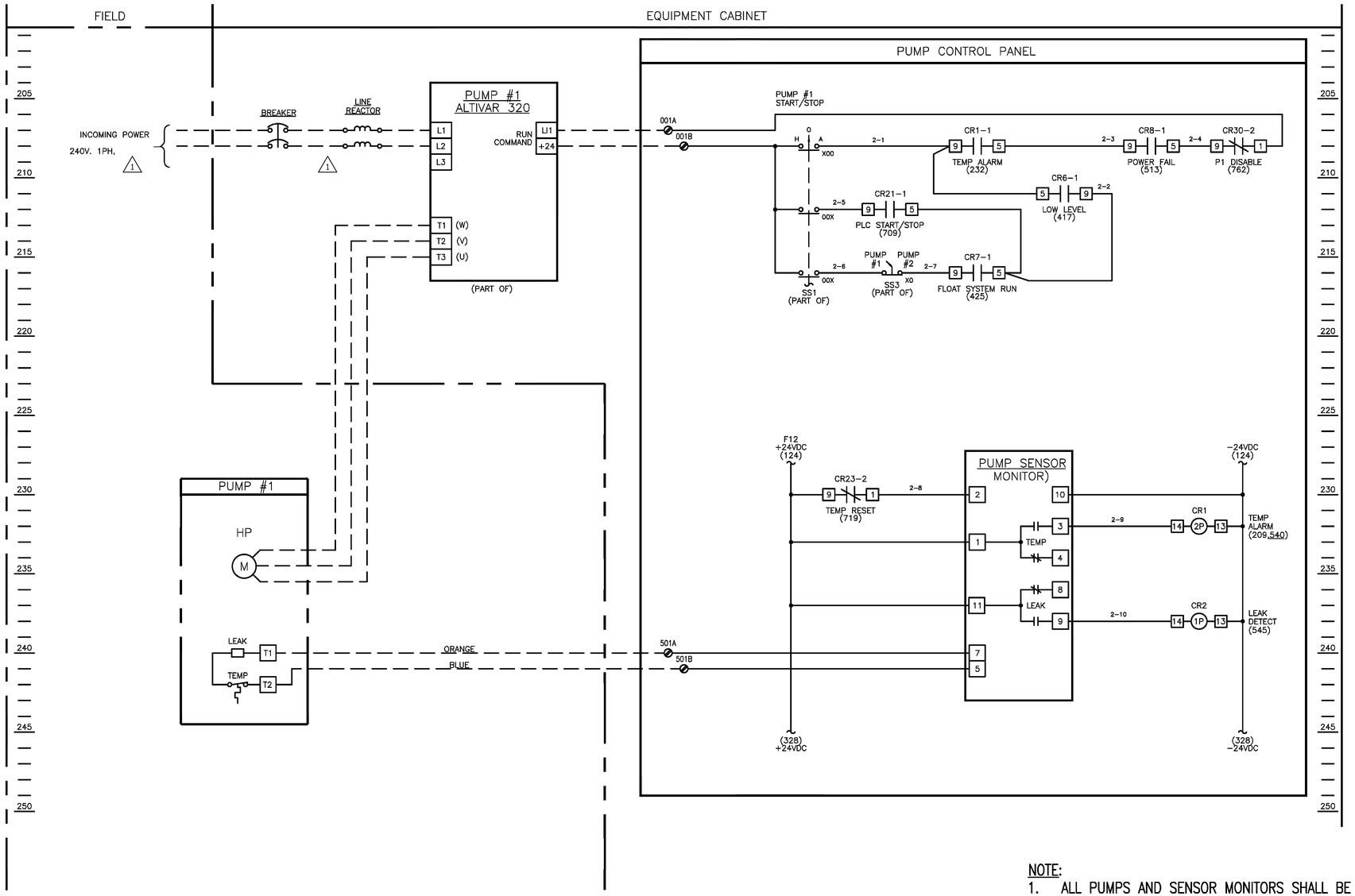

NOTE:

1. ALL PUMPS AND SENSOR MONITORS SHALL BE FLYGT PRODUCTS UNLESS OTHERWISE APPROVED BY COUNTY.

SCED DETAIL I-11 (4/25/2023)

PROFESSIONAL CERTIFICATION:
I HEREBY CERTIFY THAT THESE DOCUMENTS WERE PREPARED OR APPROVED BY ME, AND THAT I AM A DULY LICENSED PROFESSIONAL ENGINEER UNDER THE LAWS OF THE STATE OF DELAWARE, LICENSE No. 17123, EXPIRATION DATE: 06/30/2026.

solutions
Integrated Planning
Engineering & Management, LLC

303 North Bedford Street
Georgetown, DE 19947
T. 302.297.9215

3003 Merritt Mill Road
Salisbury, MD 21804
T. 410.572.8833

www.solutionsipem.com Copyright © 2022

DINA M. DIXON
LICENSE
No. 17123
DELAWARE
PROFESSIONAL ENGINEER

Date: 8/6/2024

REVISIONS

NO.	DATE	DESCRIPTION
1	8/30/24	GAI REVISION
.	.	.
.	.	.

PCP DIAGRAMS
for
LEEWARD CHASE
SUSSEX COUNTY, DELAWARE
Prepared for: Wakefield Development, LLC

Date: 8/24
Job Number: G21074
Scale: AS SHOWN
Drawn By: JLP
Designed By: DKJ
Approved By: DKJ

Sheet No.: E-5

File Name: G21074-PUMPSTAITON

Gipe Associates, Inc.
CONSULTING ENGINEERS
www.gipe.net
1220 East Joppa Road, Suite 102
Towson, Maryland 21286
Baltimore, Maryland 410.832.2420
Easton, Maryland 410.822.8688
W.O.# 24039

"THIS DRAWING AND THE DESIGN AND CONSTRUCTION FEATURES DISCLOSED ARE PROPRIETARY TO GIPE ASSOCIATES, INC. AND SHALL NOT BE ALTERED OR REUSED IN WHOLE OR IN PART WITHOUT THE EXPRESS WRITTEN PERMISSION OF GIPE ASSOCIATES, INC. Copyright © 2024"

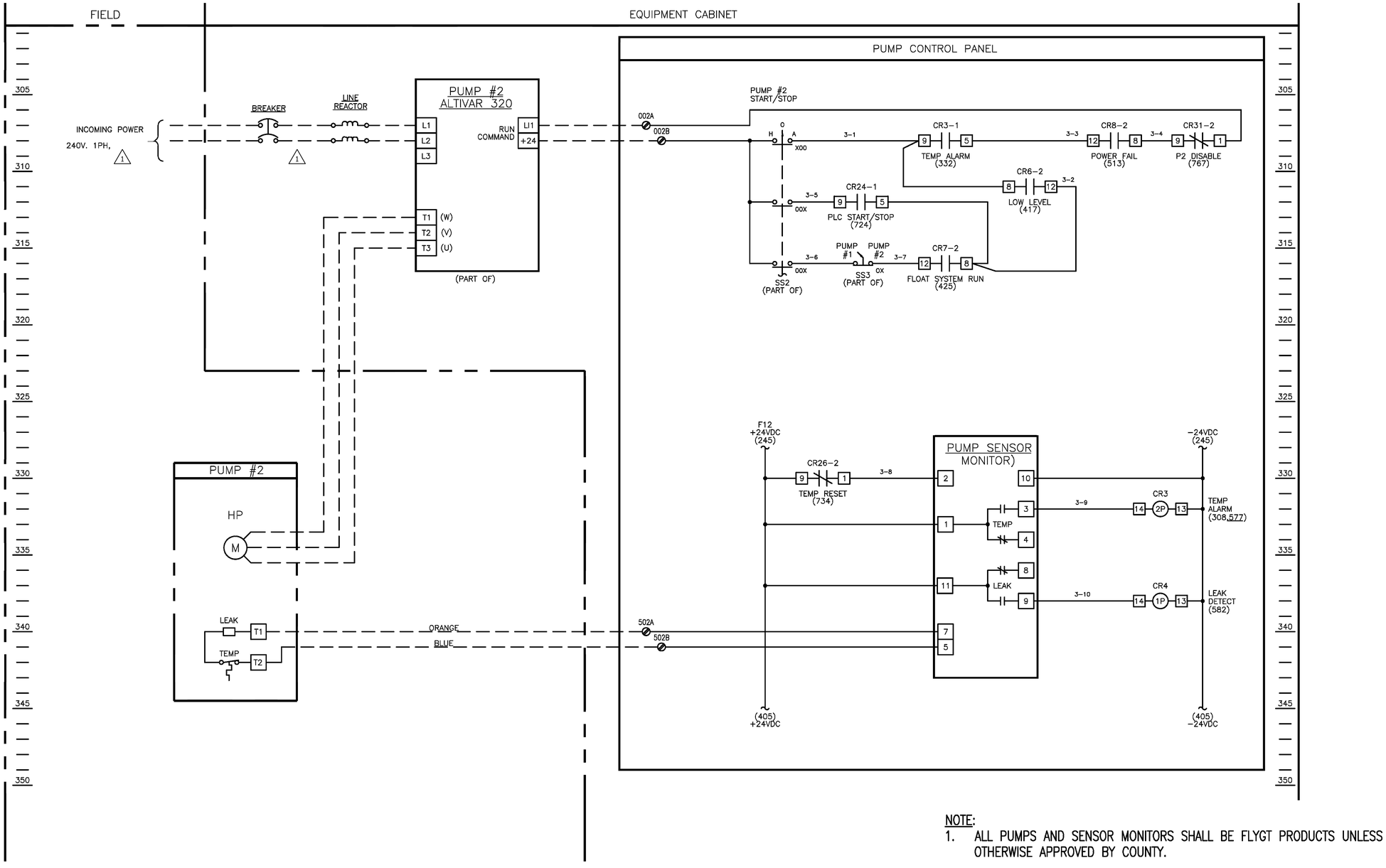

NOTE:
1. ALL PUMPS AND SENSOR MONITORS SHALL BE FLYGT PRODUCTS UNLESS OTHERWISE APPROVED BY COUNTY.

SCED DETAIL I-12 (4/25/2023)

PROFESSIONAL CERTIFICATION:
I HEREBY CERTIFY THAT THESE DOCUMENTS WERE PREPARED OR APPROVED BY ME, AND THAT I AM A DULY LICENSED PROFESSIONAL ENGINEER UNDER THE LAWS OF THE STATE OF DELAWARE, LICENSE No. 17123, EXPIRATION DATE: 06/30/2026.

solutions
Integrated Planning
Engineering & Management, LLC
303 North Bedford Street
Georgetown, DE 19947
T. 302.297.9215
3003 Merritt Mill Road
Salisbury, MD 21804
T. 410.572.8833
www.solutionsIpem.com
Copyright © 2022

DINA M. DIXON
LICENSE
No. 17123
DELAWARE
PROFESSIONAL ENGINEER

Date: 8/6/2024

REVISIONS

NO.	DATE	DESCRIPTION
1	8/30/24	GAI REVISION

PCP DIAGRAMS
for
LEEWARD CHASE
SUSSEX COUNTY, DELAWARE
Prepared for: Wakefield Development, LLC

Date:	8/24
Job Number:	G21074
Scale:	AS SHOWN
Drawn By:	JLP
Designed By:	DKJ
Approved By:	DKJ

Sheet No.: E-6

File Name: G21074-PUMPSTAITON

Gipe Associates, Inc.
CONSULTING ENGINEERS
1220 East Joppa Road, Suite 102
Towson, Maryland 21286
Baltimore, Maryland
Easton, Maryland
www.gipe.net
410.832.2420
410.822.8688
W.O.# 24039

"THIS DRAWING AND THE DESIGN AND CONSTRUCTION FEATURES DISCLOSED ARE PROPRIETARY TO GIPE ASSOCIATES, INC. AND SHALL NOT BE ALTERED OR REUSED IN WHOLE OR IN PART WITHOUT THE EXPRESS WRITTEN PERMISSION OF GIPE ASSOCIATES, INC. Copyright © 2024"

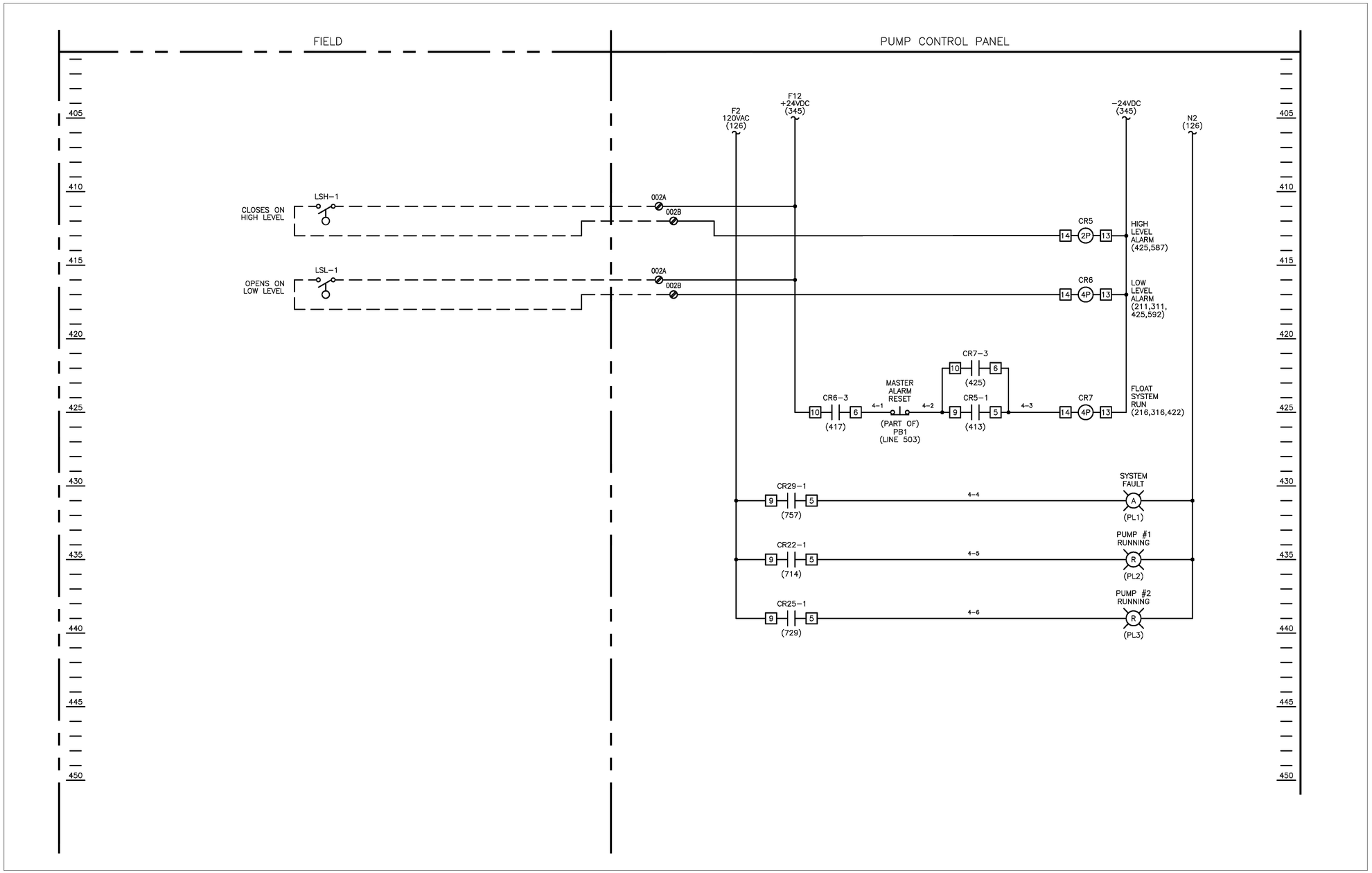

SCED DETAIL I-13 (4/25/2023)

PROFESSIONAL CERTIFICATION:
I HEREBY CERTIFY THAT THESE DOCUMENTS WERE PREPARED OR APPROVED BY ME, AND THAT I AM A DULY LICENSED PROFESSIONAL ENGINEER UNDER THE LAWS OF THE STATE OF DELAWARE, LICENSE No. 17123, EXPIRATION DATE: 06/30/2026.

solutions
Integrated Planning
Engineering & Management, LLC

303 North Bedford Street
Georgetown, DE 19947
T. 302.297.9215

3003 Merritt Mill Road
Salisbury, MD 21804
T. 410.572.8833

www.solutionsipem.com Copyright © 2022

DINA M. D. DIXON
LICENSE
No. 17123
DELAWARE
PROFESSIONAL ENGINEER

Date: 8/6/2024

REVISIONS

NO.	DATE	DESCRIPTION
.	.	.

PCP DIAGRAMS
for
LEEWARD CHASE
SUSSEX COUNTY, DELAWARE
Prepared for: Wakefield Development, LLC

Date:	8/24
Job Number:	G21074
Scale:	AS SHOWN
Drawn By:	JLP
Designed By:	DKJ
Approved By:	DKJ

Sheet No.: E-7

File Name: G21074-PUMPSTAITON

Gipe Associates, Inc.
CONSULTING ENGINEERS
1220 East Joppa Road, Suite 102
Towson, Maryland 21286
Baltimore, Maryland
Easton, Maryland
www.gipe.net
410.832.2420
410.822.8688
W.O.# 24039

"THIS DRAWING AND THE DESIGN AND CONSTRUCTION FEATURES DISCLOSED ARE PROPRIETARY TO GIPE ASSOCIATES, INC. AND SHALL NOT BE ALTERED OR REUSED IN WHOLE OR IN PART WITHOUT THE EXPRESS WRITTEN PERMISSION OF GIPE ASSOCIATES, INC. Copyright © 2024"

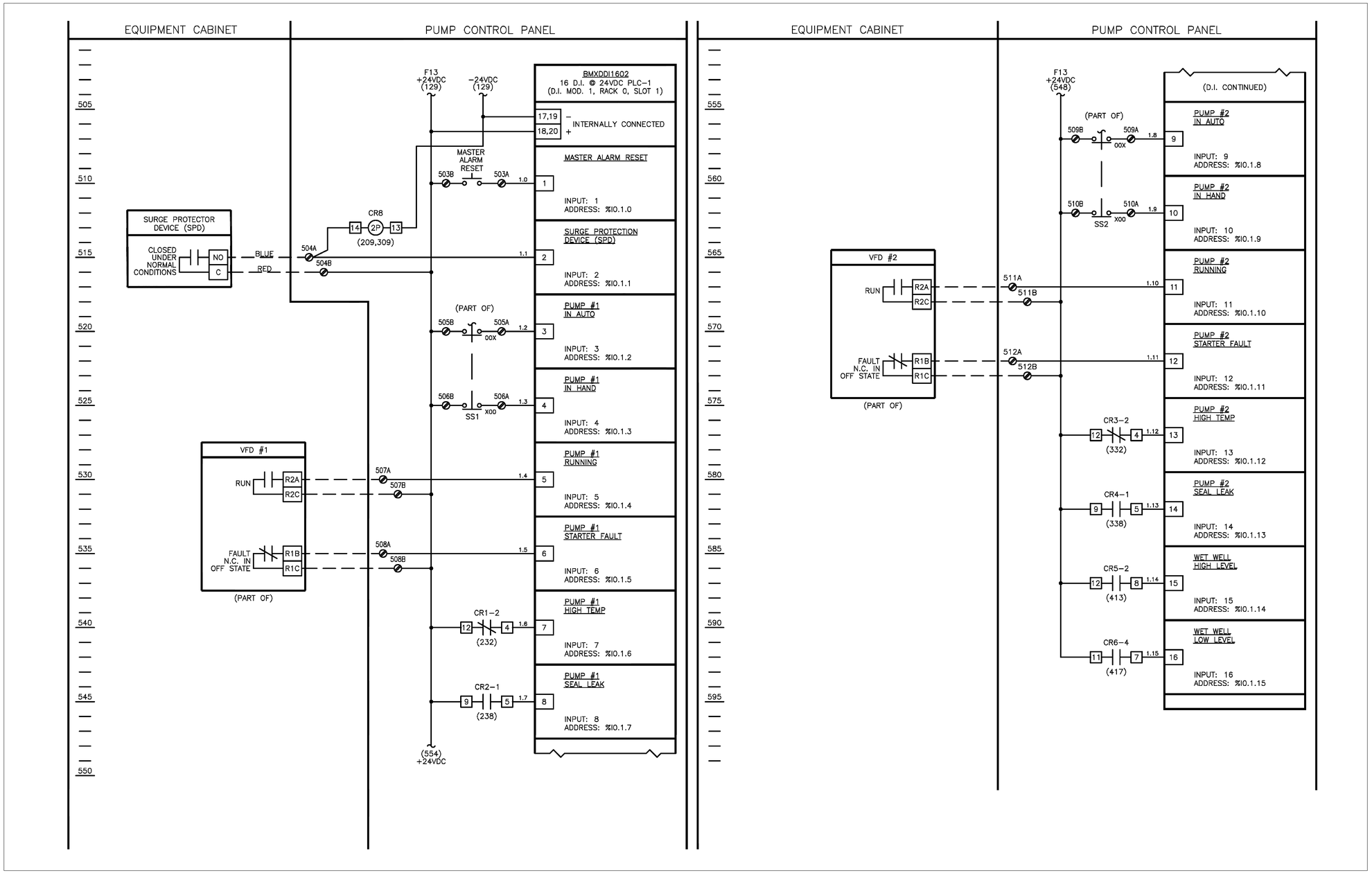

SCED DETAIL I-14 (4/25/2023)

PROFESSIONAL CERTIFICATION:
I HEREBY CERTIFY THAT THESE DOCUMENTS WERE PREPARED OR APPROVED BY ME, AND THAT I AM A DULY LICENSED PROFESSIONAL ENGINEER UNDER THE LAWS OF THE STATE OF DELAWARE, LICENSE No. 17123, EXPIRATION DATE: 06/30/2026.

solutions
Integrated Planning
Engineering & Management, LLC
303 North Bedford Street
Georgetown, DE 19947
T. 302.297.9215
3003 Merritt Mill Road
Salisbury, MD 21804
T. 410.572.8833
www.solutionsipem.com
Copyright © 2022

DINA M. DIXON
LICENSE
No. 17123
DELAWARE
PROFESSIONAL ENGINEER

Date: 8/6/2024

REVISIONS

NO.	DATE	DESCRIPTION
.	.	.

PCP DIAGRAMS
for
LEEWARD CHASE
SUSSEX COUNTY, DELAWARE
Prepared for: Wakefield Development, LLC

Date: 8/24
Job Number: G21074
Scale: AS SHOWN
Drawn By: JLP
Designed By: DKJ
Approved By: DKJ

Sheet No.: E-8

File Name: G21074-PUMPSTAITON

Gipe Associates, Inc.
CONSULTING ENGINEERS
1220 East Joppa Road, Suite 102
Towson, Maryland 21286
Baltimore, Maryland 410.832.2420
Easton, Maryland 410.822.8688
www.gipe.net
W.O.# 24039

"THIS DRAWING AND THE DESIGN AND CONSTRUCTION FEATURES DISCLOSED ARE PROPRIETARY TO GIPE ASSOCIATES, INC. AND SHALL NOT BE ALTERED OR REUSED IN WHOLE OR IN PART WITHOUT THE EXPRESS WRITTEN PERMISSION OF GIPE ASSOCIATES, INC. Copyright © 2024"

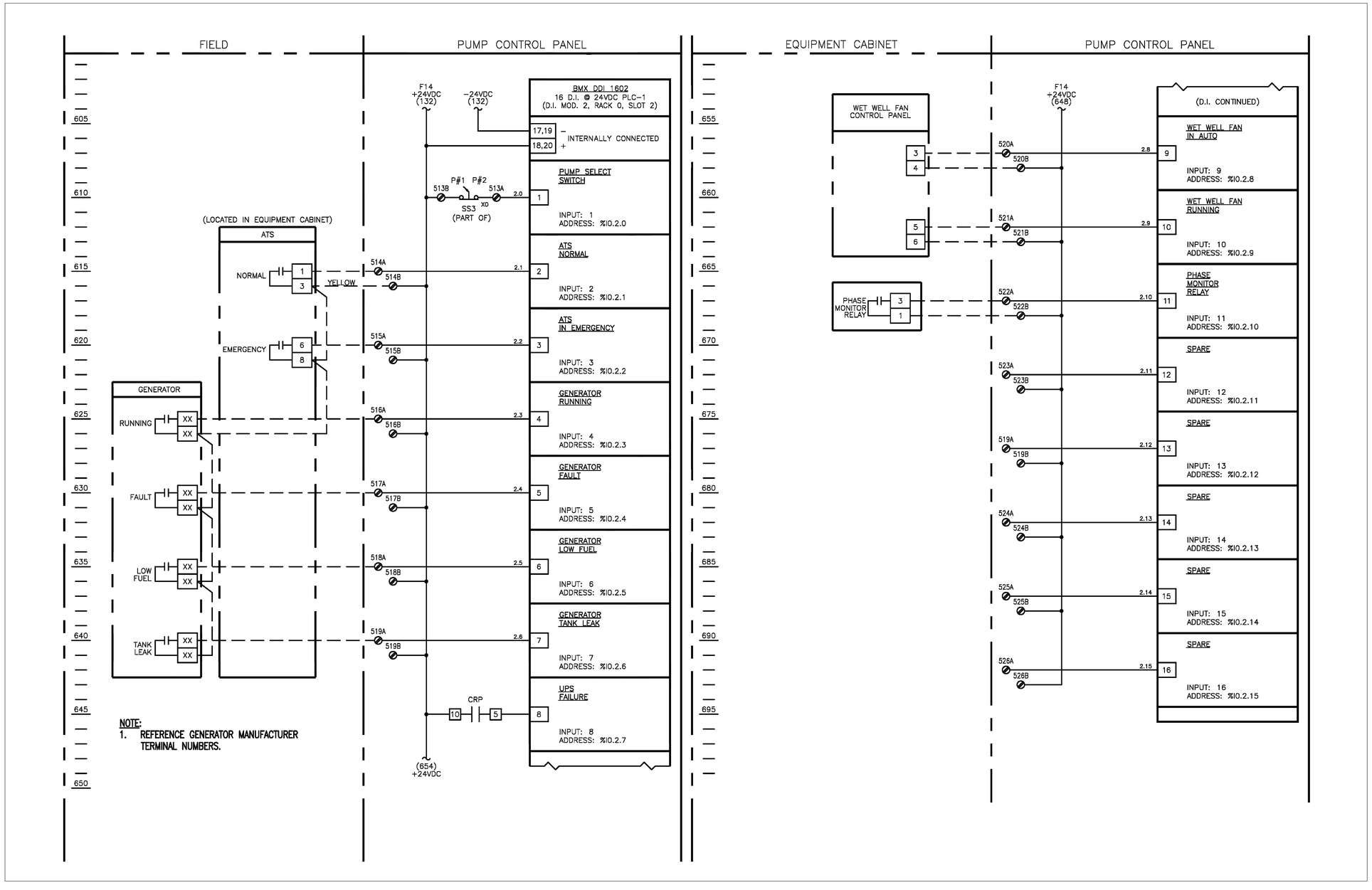

SCED DETAIL I-15 (4/25/2023)

PROFESSIONAL CERTIFICATION:
I HEREBY CERTIFY THAT THESE DOCUMENTS WERE PREPARED OR APPROVED BY ME, AND THAT I AM A DULY LICENSED PROFESSIONAL ENGINEER UNDER THE LAWS OF THE STATE OF DELAWARE, LICENSE No. 17123, EXPIRATION DATE: 06/30/2026.

solutions
Integrated Planning
Engineering & Management, LLC
303 North Bedford Street
Georgetown, DE 19947
T. 302.297.9215
3003 Merritt Mill Road
Salisbury, MD 21804
T. 410.572.8833
www.solutionsipem.com
Copyright © 2022

DINA M. DIXON
LICENSE
No. 17123
DELAWARE
PROFESSIONAL ENGINEER

Date: 8/6/2024

REVISIONS		
NO.	DATE	DESCRIPTION
.	.	.

PCP DIAGRAMS
for
LEEWARD CHASE
SUSSEX COUNTY, DELAWARE
Prepared for: Wakefield Development, LLC

Date:	8/24
Job Number:	G21074
Scale:	AS SHOWN
Drawn By:	JLP
Designed By:	DKJ
Approved By:	DKJ

Sheet No.: E-9

File Name: G21074-PUMPSTAITON

Gipe Associates, Inc.
CONSULTING ENGINEERS
1220 East Joppa Road, Suite 102
Towson, Maryland 21286
Baltimore, Maryland 410.832.2420
Easton, Maryland 410.822.8688
www.gipe.net
W.O.# 24039

"THIS DRAWING AND THE DESIGN AND CONSTRUCTION FEATURES DISCLOSED ARE PROPRIETARY TO GIPE ASSOCIATES, INC. AND SHALL NOT BE ALTERED OR REUSED IN WHOLE OR IN PART WITHOUT THE EXPRESS WRITTEN PERMISSION OF GIPE ASSOCIATES, INC. Copyright © 2024"

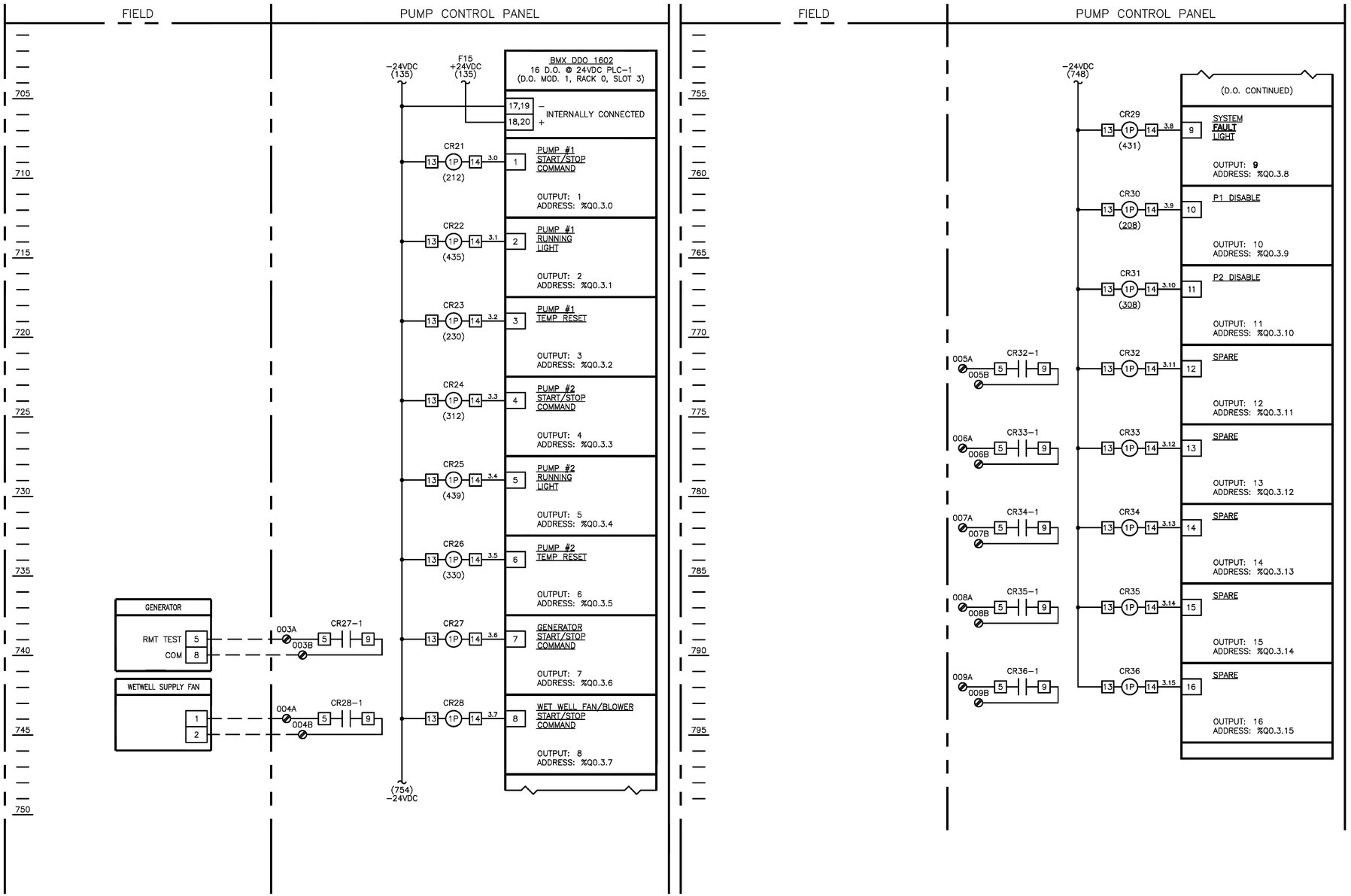

SCED DETAIL I-16 (4/25/2023)

PROFESSIONAL CERTIFICATION:
I HEREBY CERTIFY THAT THESE DOCUMENTS WERE PREPARED OR APPROVED BY ME, AND THAT I AM A DULY LICENSED PROFESSIONAL ENGINEER UNDER THE LAWS OF THE STATE OF DELAWARE, LICENSE No. 17123, EXPIRATION DATE: 06/30/2026.

solutions
Integrated Planning Engineering & Management, LLC
303 North Bedford Street
Georgetown, DE 19947
T. 302.297.9215
3003 Merritt Mill Road
Salisbury, MD 21804
T. 410.572.8833
www.solutionsipem.com
Copyright © 2022

DINA M. DIXON
LICENSE No. 17123
DELAWARE PROFESSIONAL ENGINEER

Date: 8/6/2024

REVISIONS

NO.	DATE	DESCRIPTION
.	.	.

PCP DIAGRAMS
for
LEEWARD CHASE
SUSSEX COUNTY, DELAWARE
Prepared for: Wakefield Development, LLC

Date:	8/24
Job Number:	G21074
Scale:	AS SHOWN
Drawn By:	JLP
Designed By:	DKJ
Approved By:	DKJ

Sheet No.: E-10

File Name: G21074-PUMPSTAITON

Gipe Associates, Inc.
CONSULTING ENGINEERS
1220 East Joppa Road, Suite 102
Towson, Maryland 21286
Baltimore, Maryland
Easton, Maryland
www.gipe.net
410.832.2420
410.822.8688
W.O.# 24039

"THIS DRAWING AND THE DESIGN AND CONSTRUCTION FEATURES DISCLOSED ARE PROPRIETARY TO GIPE ASSOCIATES, INC. AND SHALL NOT BE ALTERED OR REUSED IN WHOLE OR IN PART WITHOUT THE EXPRESS WRITTEN PERMISSION OF GIPE ASSOCIATES, INC. Copyright © 2024"

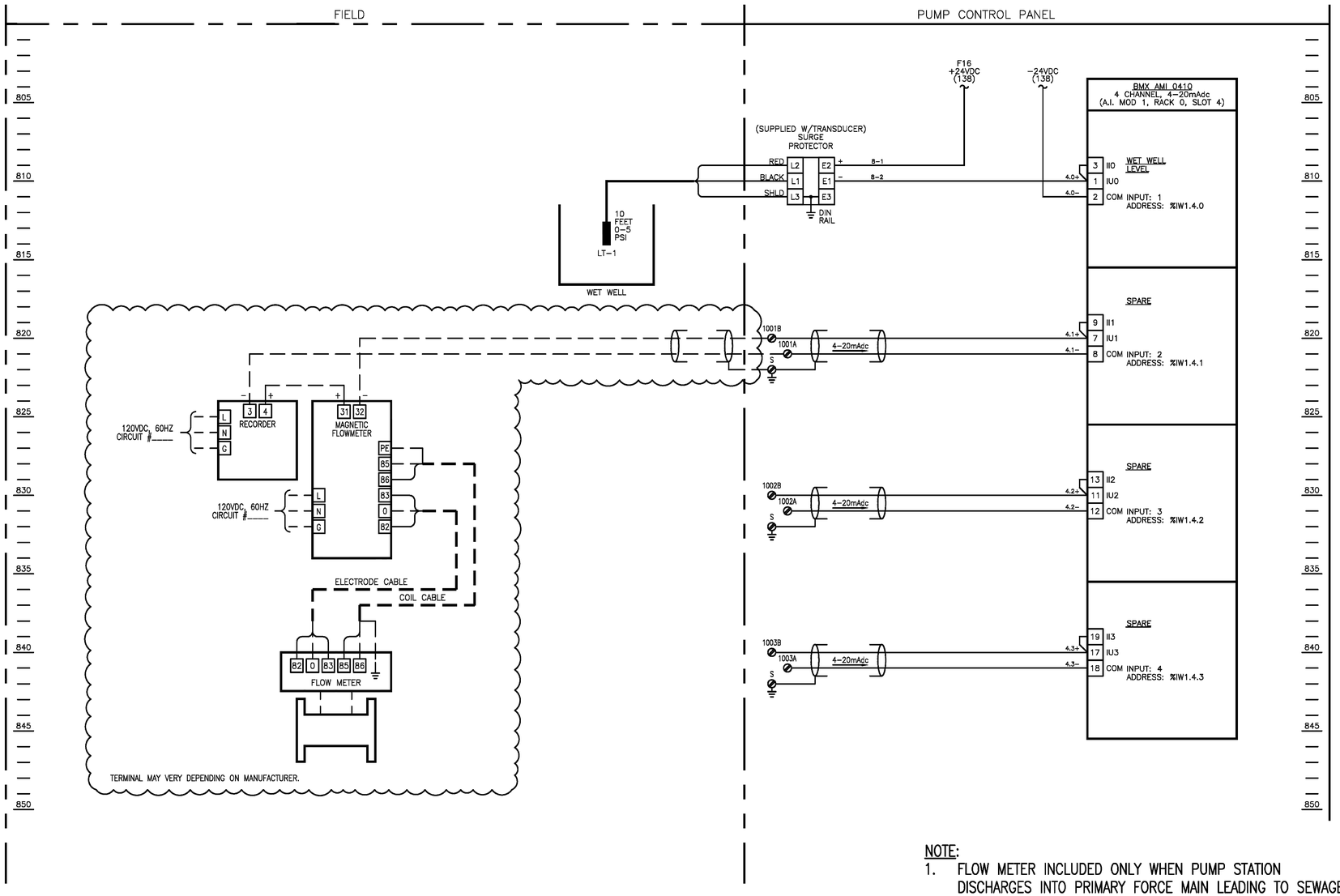

NOTE:

1. FLOW METER INCLUDED ONLY WHEN PUMP STATION DISCHARGES INTO PRIMARY FORCE MAIN LEADING TO SEWAGE TREATMENT PLANT.

SCED DETAIL I-17 (4/25/2023)

PROFESSIONAL CERTIFICATION:
I HEREBY CERTIFY THAT THESE DOCUMENTS WERE PREPARED OR APPROVED BY ME, AND THAT I AM A DULY LICENSED PROFESSIONAL ENGINEER UNDER THE LAWS OF THE STATE OF DELAWARE, LICENSE No. 17123, EXPIRATION DATE: 06/30/2026.

DINA M. DIXON
LICENSE
No. 17123
DELAWARE
PROFESSIONAL ENGINEER

Date: 8/6/2024

solutions
Integrated Planning
Engineering & Management, LLC
303 North Bedford Street
Georgetown, DE 19947
T. 302.297.9215
3003 Merritt Mill Road
Salisbury, MD 21804
T. 410.572.8833
www.solutionsipem.com
Copyright © 2022

REVISIONS

NO.	DATE	DESCRIPTION
.	.	.

PCP DIAGRAM
for
LEEWARD CHASE
SUSSEX COUNTY, DELAWARE
Prepared for: Wakefield Development, LLC

Date: 8/24
Job Number: G21074
Scale: AS SHOWN
Drawn By: JLP
Designed By: DKJ
Approved By: DKJ

Sheet No.: E-11

File Name: G21074-PUMPSTAITON

Gipe Associates, Inc.
CONSULTING ENGINEERS
1220 East Joppa Road, Suite 102
Towson, Maryland 21286
Baltimore, Maryland 410.832.2420
Easton, Maryland 410.822.8688
www.gipe.net
W.O.# 24039

"THIS DRAWING AND THE DESIGN AND CONSTRUCTION FEATURES DISCLOSED ARE PROPRIETARY TO GIPE ASSOCIATES, INC. AND SHALL NOT BE ALTERED OR REUSED IN WHOLE OR IN PART WITHOUT THE EXPRESS WRITTEN PERMISSION OF GIPE ASSOCIATES, INC. Copyright © 2024"

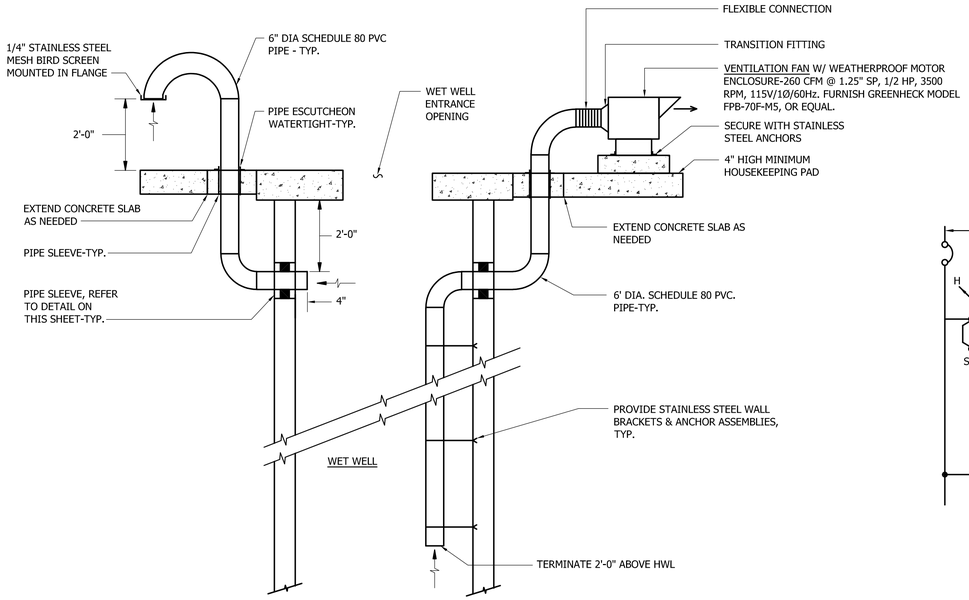

DETAIL - WET WELL VENTILATION FAN INSTALLATION

NO SCALE

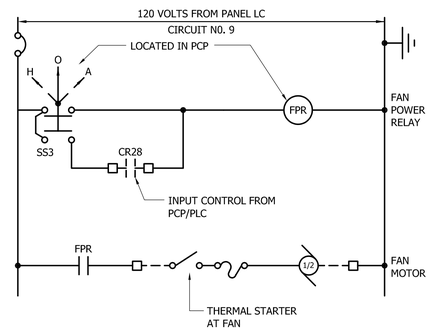

WET WELL SUPPLY FAN CONTROL DIAGRAM

PANEL SCHEDULE :	"LC" 240/120V., 1 PHASE, 3 WIRE	125 A. BUS CAPACITY 50 A. MAIN BREAKER

CIRC. NO.	FOR	BREAKERS FRM.	BREAKERS P	BREAKERS TRIP	CIRC. NO.	FOR	BREAKERS FRM.	BREAKERS P	BREAKERS TRIP
1	S.E.C. LIGHTS	100	1	20	2	PCP	100	1	20
3	S.E.C. RECEPTACLE	100	1	20	4	SPARE	100	1	20
5	S.E.C. HEATERS	100	1	20	6	GEN. BLOCK HEATER	100	1	20
7	S.E.C. COOLING FANS	100	1	20	8	GEN. BATTERY CHARGER	100	1	20
9	W.W. SUPPLY FAN	100	1	20	10	SITE LIGHT	100	1	20
11	SPACE W/BUS	-	1	-	12	SPACE W/BUS	-	1	-
13	SPACE W/BUS	-	1	-	14	SPACE W/BUS	-	1	-
15	SPACE W/BUS	-	1	-	16	SPACE W/BUS	-	1	-

PROFESSIONAL CERTIFICATION:
I HEREBY CERTIFY THAT THESE DOCUMENTS WERE PREPARED OR APPROVED BY ME, AND THAT I AM A DULY LICENSED PROFESSIONAL ENGINEER UNDER THE LAWS OF THE STATE OF DELAWARE, LICENSE No. 17123, EXPIRATION DATE: 06/30/2026.

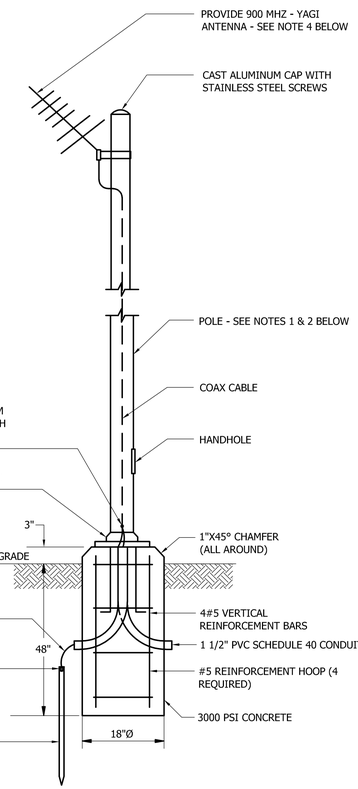

DETAIL - SCADA ANTENNA & POLE/FOUNDATION

SCALE: NONE

SCED DETAIL I-13 (4/25/2023)

NOTES

1. POLE HEIGHT WILL SHALL BE 20'-40' AND SHALL BE DETERMINED BY THE COUNTY DURING CONSTRUCTION AFTER COORDINATES HAVE BEEN SUBMITTED AND A RADIO PATH REPORT HAS BEEN COMPLETED BY THE COUNTY.
2. POLES SHALL BE HINGED ALUMINUM FOR ANTENNA HEIGHTS 20' AND BELOW. POLES SHALL BE NON HINGED ALUMINUM FOR ANTENNA HEIGHTS GREATER THAN 20'.
3. MOUNTING STUDS SHALL BE POURED INTO CONCRETE BASE PER MANUFACTURES RECOMMENDATIONS. LAGS OR DRIVE PINS WILL NOT BE PERMITTED.
4. THE CONTRACTOR SHALL ADJUST THE DIRECTION OF THE ANTENNA AS DIRECTED BY THE COUNTY.

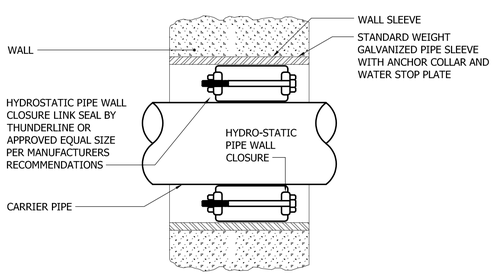

DETAIL -TYPICAL PIPE SLEEVE THRU EXTERIOR WALL

1. DETAIL TYPICAL FOR ABOVE GRADE AND BELOW GRADE

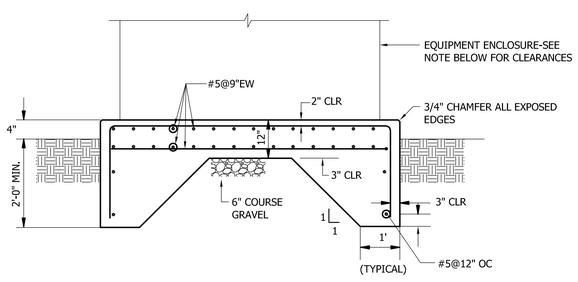

DETAIL - TYPICAL GENERATOR/SERVICE EQUIPMENT CONCRETE PAD

SCALE: NONE

CLEARANCES:

1. GENERATOR - 12" ON ALL SIDES.
2. SERVICES EQUIPMENT CABINET - 5'-0" ON POWER SIDE & CONTROL SIDE & 6" BOTH ENDS.

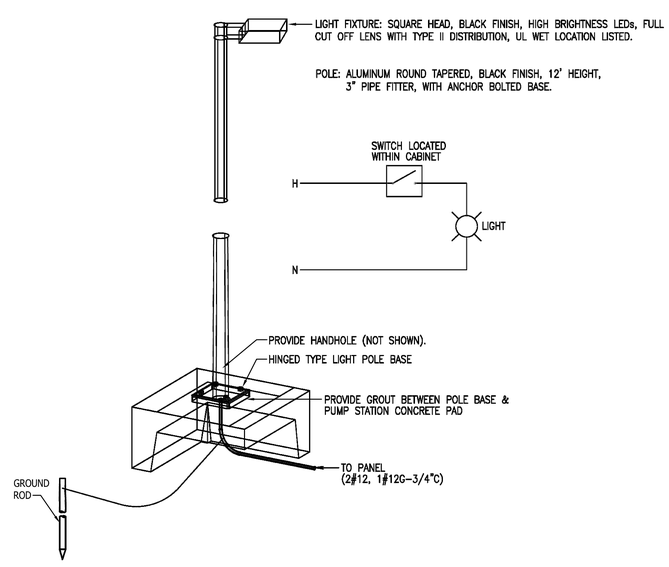

DETAIL - SITE LIGHT - SCED DETAIL E-2 (REV. 12/21)

SCALE: NONE

Gipe Associates, Inc.
CONSULTING ENGINEERS
www.gipe.net
1220 East Joppa Road, Suite 102
Towson, Maryland 21286 410.832.2420
Baltimore, Maryland
Easton, Maryland 410.822.8688
W.O.# 24039

"THIS DRAWING AND THE DESIGN AND CONSTRUCTION FEATURES DISCLOSED ARE PROPRIETARY TO GIPE ASSOCIATES, INC. AND SHALL NOT BE ALTERED OR REUSED IN WHOLE OR IN PART WITHOUT THE EXPRESS WRITTEN PERMISSION OF GIPE ASSOCIATES, INC. Copyright © 2024"

solutions
Integrated Planning
Engineering & Management, LLC
303 North Bedford Street
Georgetown, DE 19947
T. 302.297.9215
3003 Merritt Mill Road
Salisbury, MD 21804
T. 410.572.8833
www.solutionsipem.com

Copyright © 2022

DIANA M. DIXON
LICENSE
No. 17123
DELAWARE
PROFESSIONAL ENGINEER

Date: 8/6/2024

REVISIONS

NO.	DATE	DESCRIPTION
.	.	.

DETAILS, DIAGRAM, & SCHEDULES
for
LEEWARD CHASE
SUSSEX COUNTY, DELAWARE
Prepared for: Wakefield Development, LLC

Date:	8/24
Job Number:	G21074
Scale:	AS SHOWN
Drawn By:	JLP
Designed By:	DKJ
Approved By:	DKJ

Sheet No.: E-12

File Name: G21074-PUMPSTAITON