Standard Detail & Specifications

Slope Treatment - EC Log

DATA
Log diameter (D)
Sock Material

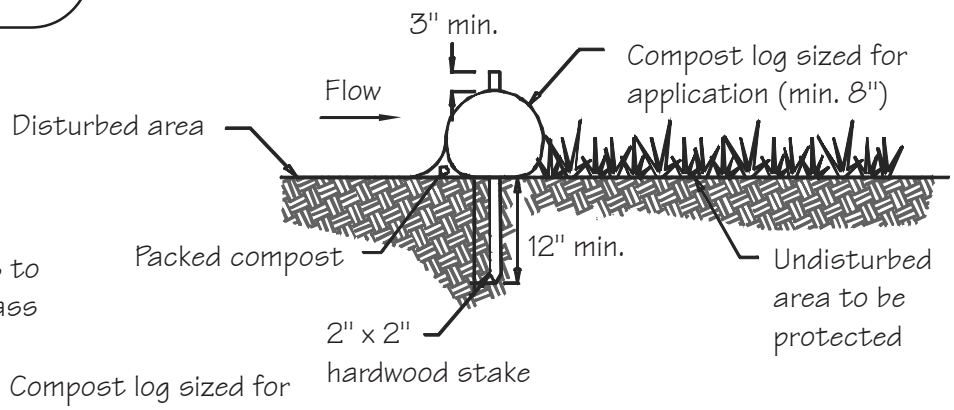

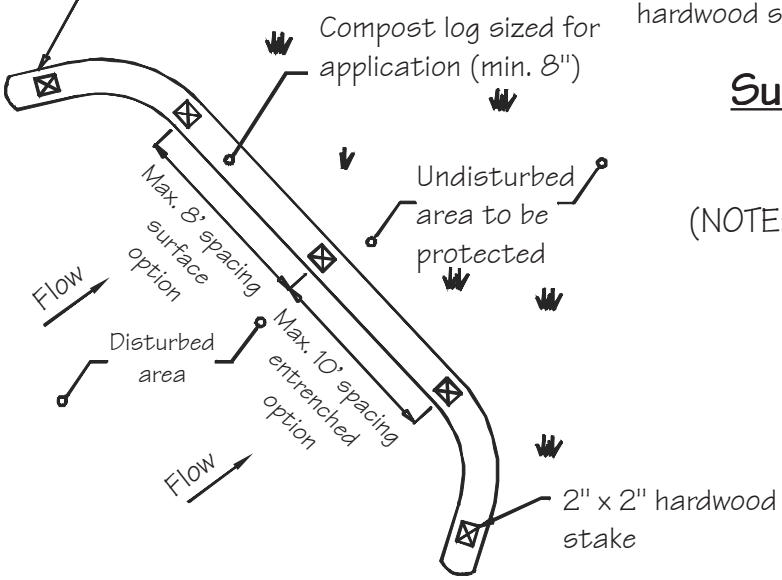

Plan

Surface Option Shown for Slopes less than 8:1

(NOTE: For steeper slopes, drive stakes perpendicular to surface)

NOTE: Manufacturer's recommendations supersede any installation details shown for this practice

Source:	Symbol:	Detail No.
Adapted from Filtrexx™ International	ST-L	**DE-ESC-3.4.2.4** Sheet 1 of 2 Effective July 2023

Slope Treatment - EC Log

Construction Notes:

1. All graded or disturbed areas including slopes shall be protected during clearing and construction in accordance with the approved sediment control plan until they are permanently stabilized.
2. The erosion control log shall be placed perpendicular to the slope gradient. The product must have intimate contact with the soil to reduce the occurrence of undermining of the product.
3. Stakes should be driven so that they are perpendicular to the ground surface slope. Refer to the product manufacturer's guidelines for more information on installation and spacing of the stakes.
4. Installing a slope interruption product on frozen ground is not recommended. In the case where the product must be installed on frozen ground, trenching is not required and staking can be accomplished with metal stakes.

Spacing Specifications:

Straw Wattle	12" dia.	Fiber Filt. Tube	9" dia.	Compost Log	12" dia.	18" dia.	24" dia.
Slope Ratio (x:1)	Spacing (L) in ft.	Slope Ratio (x:1)	Spacing (L) in ft.	Slope Ratio (x:1)	Spacing (L) in ft.	Spacing (L) in ft.	Spacing (L) in ft.
1:1	5	1:1	15	1:1 to 2:1	20	30	35
2:1 to 1:1	10	2:1	25	3:1	30	45	60
4:1 to 2:1	20	3:1	35	5:1	50	70	130
5:1 to 4:1	40	4:1	50				
< 6:1	50						

Source:	Symbol:	Detail No.
Adapted from Filtrexx™ International	ST-L	**DE-ESC-3.4.2.4** Sheet 2 of 2 Effective July 2023