STANDARD AND SPECIFICATIONS FOR TEMPORARY SEDIMENT BASIN

Definition: A temporary barrier or dam constructed across a drainageway or at other suitable locations to intercept sediment-laden runoff and to trap and retain the sediment.

Purpose: The purpose of a sediment basin is to intercept sediment-laden runoff and reduce the amount of sediment leaving the disturbed area in order to protect drainageways, properties, and rights-of-way below the sediment basin.

Scope: This standard applies to the installation of temporary sediment basins on sites where:

1. Failure of the structure would not result in loss of life, damage to homes or buildings, or interruption of use or service of public roads or utilities;

2. The drainage area does not exceed 100 acres;

3. The basin is to be removed within 36 months after the beginning of construction of the basin.

Permanent (to function more than 36 months) sediment basins or structures that temporarily function as a sediment basin but are intended for use as a permanent stormwater management facility shall be classified as permanent structures and shall conform to criteria appropriate for permanent structures. These structures shall be designed and constructed to conform to State criteria, local requirements, and/or U.S.D.A. Natural Resource Conservation Service Standards and Specifications No. 378 for ponds; whichever is more restrictive. The total volume of permanent sediment basins shall equal or exceed the capacity requirements for temporary basins contained herein.

Proposed 2023 Update

Criteria for Temporary Sediment Basins For the purpose of this standard, sediment basins must meet the following minimum criteria:				
Max.Drainage Area, acres	Max.Height* of Dam, Ft.	Min.Embankment Top Width, Ft.	Embankment Side Slopes	Anti-Seep Collar Req'd
100	15	10	2:1 Inside 3:1 Outside	Yes
* Height is measured from the low point of original ground along the centerline of dam to the top of the dam.				

Conditions Where Practice Applies:

A sediment basin is appropriate where physical site conditions or land ownership restrictions preclude the installation of other erosion control measures to adequately control runoff, erosion, and sedimentation. It may be used below construction operations which expose critical areas to soil erosion. The basin shall be maintained until the disturbed area is protected against erosion by permanent stabilization.

Design Criteria for Temporary Sediment Basins:
Standard designs have been established for temporary sediment basins having drainage areas less than 20 acres. The data for these standard designs are shown in Figure 3.1.4a for drainage areas less than 10 acres and in Figure 3.1.4b for drainage areas from 10 to 20 acres. Basins which have drainage areas greater than 20 acres or which have special circumstances which preclude the use of a standard design shall have a site specific design. A worksheet has been provided based on the recommended design procedure (see Figure 3.1.4c). The following discussion outlines additional criteria to be considered in the design process.

Compliance with Laws and Regulations
Design and construction shall comply with state and local laws, ordinances, rules and regulations.

Location
The sediment basin should be located to obtain the maximum storage benefits from the terrain and for ease of cleanout of the trapped sediment. It should be located to minimize interference with construction activities and construction of utilities. Whenever possible, sediment basins should be located so that storm drains may outfall or be diverted into the basin.

Size of the Basin
The volume of the sediment basin, as measured from the bottom of the base to the elevation of the crest of the principal spillway shall be at least 3,600 cubic feet per acre of drainage area. This 3,600 cubic feet is equivalent to 1.0 inch of sediment per acre of drainage area. Additional storage in the form of a permanent wet pool shall be provided whenever practicable, but may not be used to fulfill the temporary storage volume requiement.

Sediment basins shall be cleaned out when the volume remaining as described above is reduced by sedimentation to 1,800 cubic feet per acre of drainage area (50 percent full). In no case shall the sediment level be permitted to build up higher than one foot below the principal spillway crest. At this elevation, cleanout shall be performed to restore the original design volume to the sediment basin. The elevation of the maximum allowable sediment level shall be determined and shall be stated in the design data as a distance below the top of the riser and be clearly marked on the riser.

The basin dimensions necessary to obtain the required basin volume as stated above shall be clearly shown on the plans to facilitate plan review, construction and inspection.

Shape of the Basin
It is recommended that the designer of a sediment basin strive to incorporate the following features:

- Length to width ratio greater than 2:1, where length is the distance between the inlet and outlet.
- A wedge shape with the inlet located at the narrow end.

In cases where site conditions prevent the use of the recommended shape, function can sometimes be improved by installing baffles in the basin pool area. A procedure for the design of these structures is discussed later in this standard and specification.

Spillway Design
Peak rates of runoff values used in spillway design shall be based on USDA-NRCS methodology as outlined in TR 55 Urban Hydrology and/or TR 20 Project Formulation - Hydrology. Special situations which warrant a different methodology require approval from the Department. Runoff computations shall be based upon the worst soil-cover conditions expected to prevail in the contributing drainage area during the anticipated effective life of the structure. The combined capacities of the principal and emergency spillway shall be sufficient to pass the peak rate of runoff from a 10-year frequency, 24-hour NRCS Type II rainfall event or a higher frequency corresponding to the hazard involved.

1. **Principal spillway** - A spillway consisting of a vertical pipe or box type riser joined (watertight connection) to a pipe (barrel) which shall extend through the embankment and outlet beyond the downstream toe of the fill. The minimum capacity of the principal spillway shall be 0.2 cfs per acre of drainage area when the water surface is at the emergency spillway crest elevation. For those basins with no emergency spillway, the principal spillway shall have the capacity to handle the peak flow from a ten year frequency rainfall event. The minimum size of the barrel shall be 8 inches in diameter. ***See Figures 3.1.4d, 3.1.4e, and 3.1.4f for principal spillway sizes and capacities.***

    a. *Crest elevation* - When used in combination with an emergency spillway, the crest elevation of the riser shall be a minimum one foot below the elevation of the control section of the emergency spillway.

    b. *Watertight riser and barrel assembly* - The riser and all pipe connections shall be completely watertight except for the inlet opening at the top or a dewatering opening and shall not have any other holes, leaks, rips or perforations in it.

c. *Dewatering the basin* - There are two stages of dewatering the basin: (1) the detention pool which is below the crest of the riser and above the surface of the trapped sediment; and (2) the sediment itself which will have a high water content to the point of being "soupy."

   i. Individual dewatering methods may be dictated by the intended use of the basin, i.e., sediment, flyash, or other special materials, that are to be trapped and retained within the basin. If a dewatering device is needed it shall be included in the sediment basin plans submitted for approval and shall be installed during construction of the basin. Dewatering shall be done in such a manner as to remove the relatively clean water without removing any of the sediment that has settled out and without removing any appreciable quantities of floating debris. Dewatering sediments trapped in a basin are often advantageous to the developer or contractor. Relatively dry material can be handled with on-site equipment rather than the expensive draglines often needed to handle wet (underwatered) sediments. Usually, the detention pool may be dewatered by a siphon installed on the riser, mechanical pumping, and surface or subsurface drains. For details on these methods of dewatering, see Section 3.2 of the Handbook.

   ii. Dewatering the sediment is not required but some local ordinances may require some methods to dewater the basin and facilitate the cleanout process. One very successful means of doing this is by use of a dewatering device.

d. *Anti-vortex device and trash rack* - An anti-vortex device and trash rack shall be securely installed on top of the riser and shall be the concentric type as shown on Sheet 3 of the Standard Detail and Specification for Temporary Sediment Basin.

e. *Base* - The riser shall have a base attached with a watertight connection and shall have sufficient weight to prevent flotation of the riser. Two approved bases for risers ten feet or less in height are: (1) a concrete base 18" thick with the riser embedded 9" in the base, and (2) a 1/4" minimum thickness steel plate attached to the riser by a continuous weld around the circumference of the riser to form a watertight connection. The plate shall have 2.5 feet of stone, gravel, or compacted earth placed on it to prevent flotation. In either case, each side of the square base shall be twice the riser diameter.

   For risers greater than ten feet high computations shall be made to design a base which will prevent flotatation. The minimum factor of safety shall be 1.20 (Downward forces = 1.20 x upward forces).

f. *Anti-Seep Collars* - anti-seep collars shall be installed around all conduits through earth fills of impoundment structures according to the following criteria:

   i. Collars shall be placed to increase the seepage length along the conduit by a minimum of 15 percent of the pipe length located within the saturation zone.

   ii. Collar spacing shall be between 5 and 14 times the vertical projection of each collar.

   iii. All collars shall be placed within the saturation zone.

   iv. The assumed normal saturation zone (phreatic line) shall be determined by projecting a line at a slope of 4 horizontal to 1 vertical from the point where the normal water (riser crest) elevation touches the

the upstream slope of the fill to a point where this line intersects the invert of the pipe conduit. All fill located within this line may be assumed as saturated.

When anti-seep collars are used, the equation for revised seepage length becomes:

$$2(N)V = 0.15(Ls) \quad \text{or} \quad N = \frac{0.075(Ls)}{V}$$

Where: Ls = saturated length is length, in feet, of pipe between riser and intersection of phreatic line and pipe invert.
N = number of anti-seep collars.
V = vertical projection of collar from pipe, in feet.

v. All anti-seep collars and their connections shall be watertight.

g. Outlet - An outlet shall be provided, including a means of conveying the discharge in an erosion-free manner to an existing stable channel. Where discharge occurs at the property line, drainage easements will be obtained in accordance with local ordinances. Adequate notes and references will be shown on the erosion and sediment control plan.

Protection against scour at the discharge end of the pipe spillway shall be provided. Measures may include impact basin, riprap, revetment, excavated plunge pools, or other approved methods. See the Standard and Specifications for Riprap Outlet Protection or Riprap Stilling Basin.

2. **Emergency Spillways** - The entire flow area of the emergency spillway shall be constructed in undisturbed ground (not fill). The emergency spillway cross-section shall be trapezoidal with a minimum bottom width of eight feet. This spillway channel shall have a straight control section of at least 20 feet in length; and a straight outlet section of at least 25 feet in length.

a. *Capacity* - The minimum capacity of the emergency spillway shall be that required to pass the peak rate of runoff from the 10-year 24-hour frequency storm, less any reduction due to flow in the pipe spillway.

b. *Velocities* - The velocity of flow in the exit channel shall not exceed 5 feet per second for vegetated channels during a 10 year runoff event. For channels with erosion protection other than vegetation, velocities shall be within the non-erosive range for the type of protection used.

c. *Erosion Protection* - Erosion protection shall be provided for by vegetation as prescribed in this publication or by other suitable means such as riprap, asphalt or concrete.

d. *Freeboard* - Freeboard is the difference between the design high water elevation in the emergency spillway and the top of the settled embankment. If there is no emergency spillway it is the difference between the water surface elevation required to pass the design flow through the pipe and the top of the settled embankment. *The freeboard shall be at least one foot.*

Embankment Cross-Section
The minimum top width shall be ten feet. The inside slopes shall be 2:1 or flatter, outside slopes shall be 3:1 or flatter.

Entrance of Runoff Into Basin
Points of entrance of surface runoff into excavated basins shall be protected to prevent erosion. Considerable care should be given to the major points of inflow into basins. In many cases the difference in elevation of the inflow and the bottom of the basin is considerable, thus creating potential for severe gullying and sediment generation. Often a riprap chute at major points of inflow would eliminate gullying and sediment generation.

Diversions, grade stabilization structures or other water control devices shall be installed as necessary to insure direction of runoff and protect points of entry into the basin. Points of entry should be located so as to insure maximum travel distance of the incoming runoff to point of exit (the riser) from the basin.

Procedure for Determining or Altering Sediment Basin Shape
As specified in the Standard and Specification, the pool area at the elevation of the crest of the principal spillway shall have a length to width ratio of at least 2.0 to 1. The purpose of this requirement is to minimize the "short-circuiting" effect of the sediment laden inflow to the riser and thereby increase the effectiveness of the sediment basin. The purpose of this procedure is to prescribe the parameters, procedures and methods of determining and modifying the shape of the basin.

The length of the flow path (L) is the distance from the point of inflow to the riser (outflow point). The point of inflow is the point that the stream enters the normal pool (pool level at the riser crest elevation). The pool area (A) is the area of the normal pool. The effective width (W_e) is found by the equation:

$$W_e = A/L_e \quad \text{and L:W ratio} = L/W_e$$

In the event there is more than one inflow point, any inflow point which conveys more than 30 percent of the total peak inflow rate shall meet the length-width ratio criteria.

The required basin shape may be obtained by proper site selection, by excavation or by constructing a baffle in the basin. The purpose of the baffle is to increase the effective flow length from the inflow point to the riser. Baffles shall be placed mid-way between the inflow point and the riser. The baffle length shall be as required to provide the minimum 2:1 length-width ratio. The effective length (L_e) shall be the shortest distance the water must flow from the inflow point around the end of the baffle to the outflow point. Then:

$$W_e = A/L_e \quad \text{and L:W ratio} = L_e/W_e$$

Three examples are shown on Sheet 9 of the Standard Detail and Specification for Temproary Sediment Basin. Note that for the special case in Example C, the water is allowed to go around both ends of the baffle and the effective length, $L_e = L_1 + L_2$. Otherwise, the length-width ratio computations are the same as shown above. This special case procedure for computing L_e is allowable only when the two flow paths are equal, i.e., when $L_1 = L_2$. A baffle detail is also shown.

Disposal

The sediment basin plans shall indicate the method(s) of disposing of the sediment removed from the basin. The sediment shall be placed in such a manner that it will not erode from the site. The sediment shall not be deposited downstream from the basin, or adjacent to a stream, or floodplain. Disposal sites will be stabilized as required by an approved erosion and sediment control plan.

The sediment basin plans shall also show the method of removing the sediment basin after the drainage area is stabilized, and shall include the stabilization of the sediment basin site. The basin shall be dewatered in accordance with the approved plan prior to removing or breaching the embankment. Sediment shall not be allowed to flush into a stream or drainageway.

Safety

Sediment basins are attractive to children and can be very dangerous. Local ordinances and regulations must be adhered to regarding health and safety. The developer or owner shall check with local building officials on applicable safety requirements. If temporary fencing of sediment basins is required, the location of and type of fence shall be shown on the plan.

Final Disposal

When temporary structures have served their intended purpose and the contributing drainage area has been properly stabilized, the embankment and resulting sediment deposits are to be leveled or otherwise disposed of in accordance with the approved sediment control plan. The proposed use of a sediment basin site will often dictate final disposition of the basin and any sediment contained therein. If the site is scheduled for future construction, then the basin material and trapped sediments must be removed, safely disposed of, and backfilled with a structural fill. When the basin area is to remain open space the pond may be pumped dry, graded and back filled.

INFORMATION TO BE SUBMITTED

Temporary sediment basin designs and construction plans submitted for review to the regulatory authority shall include the completed hydrologic design computation worksheet (Figure 3.1.4c) and the data required on the Standard Detail and Specification. (NOTE: Standard designs discussed previously do not require hydrologic computations.)

Conditions Where Practice Applies:

1. Drainage area to the basin is less than 10 acres.
2. An emergency spillway is required: $Q_{ES} = Q_{PEAK} - Q_{PIPE} = 52 - 11 = 41$ cfs
3. Volume of storage computed as 3,600 C.F./acre of drainage area.
4. $A/Q_{10} \geq .01$

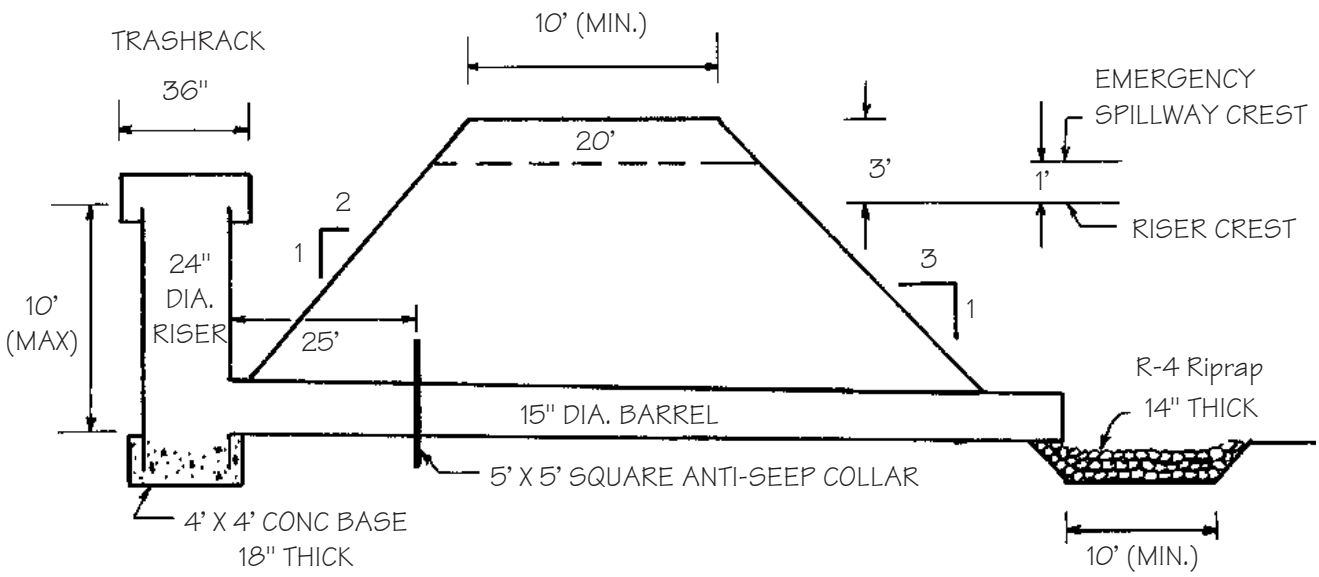

Figure 3.1.4a Standard sediment basin design for drainage areas less than 10 acres

NOTE: This graphic is for informational purposes only.
Data must be transfered to Standard Detail and Specifications for construction purposes.

Proposed 2023 Update

Conditions Where Practice Applies:

1. Drainage area to the basin is 10 to 20 acres.
2. An emergency spillway is required: $Q_{ES} = Q_{PEAK} - Q_{PIPE} = 88 - 35 = 53$ cfs
3. Volume of storage computed as 3,600 C.F./acre of drainage area.
4. $A/Q_{10} \geq .01$

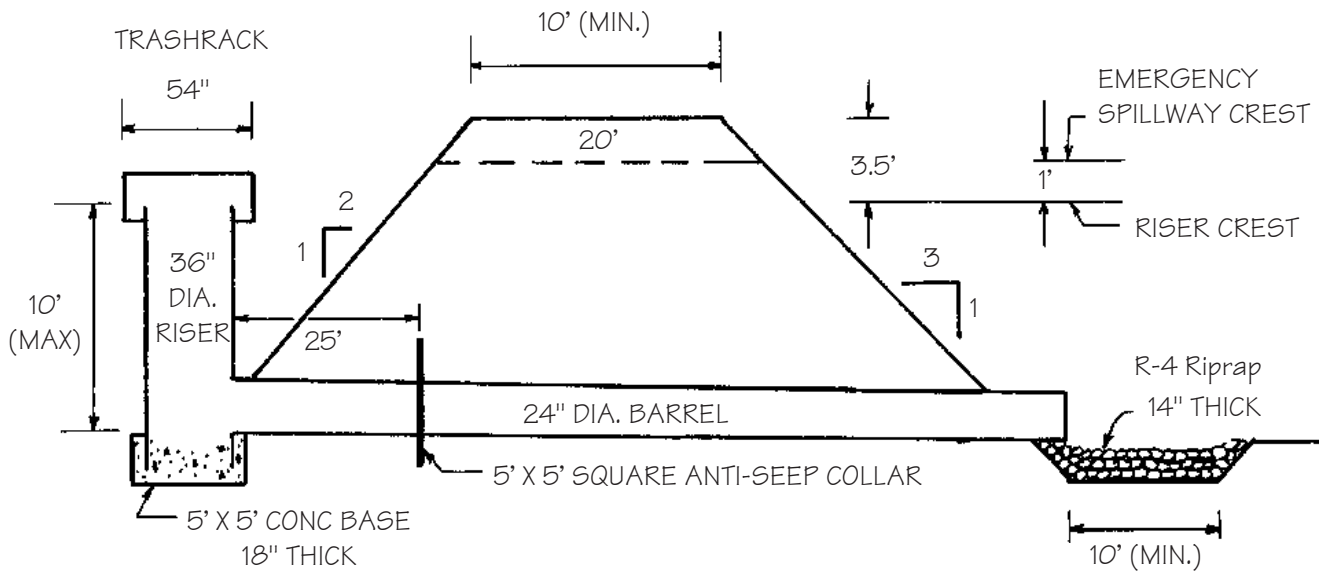

Figure 3.1.4b Standard sediment basin design for drainage areas from 10 to 20 acres.

NOTE: This graphic is for informational purposes only.
Data must be transfered to Standard Detail and Specifications for construction purposes.

Computed by _____ Date_____
Checked by _____ Date_____

Project _____
Basin ID_____Location_____
Total area draining to basin,_____Acres.

BASIN VOLUME DESIGN

1. Min. required volume = 134 cu. yds. x _____ ac. drainage = _____cu. yds.
2. Volume of basin* = _____ = _____ cu. yds.
3. Excavate _____ cu. yds. to obtain required capacity.
   Min. vol. before cleanout = 67 cu. yds. x _____ac. drainage = _____ cu. yds.
   Elevation corresponding to scheduled time to clean out: _____
   Distance below top of riser (ft): _____

DESIGN OF SPILLWAYS

Runoff

4. Qp_{10}= _____ cfs (TR-55 or other appropriate method, attach runoff computation sheet).

Pipe Spillway (Qps)

5. Min. pipe spillway capacity, Qps = 0.2 x _____ ac. drainage = _____ cfs.
   Note: If there is no emergency spillway, then req'd. Qps= Qp_{10} = _____cfs.
6. H = _____ft. Barrel length = _____ft.
7. Barrel: Diam._____inches; Qps = (Q) _____ x (cor.fac.) _____ = _____cfs.
8. Riser: Diam._____inches; Length _____ft.; h = _____ft.
9. Trash Rack: Diam._____inches; H = _____inches.

Emergency Spillway Design

10. Emergency Spillway Flow, Qes = Qp_{10} - Qps = _____ - _____ = _____cfs.
11. Width_____ft. Hp _____ft.
    Entrance channel slope _____%
    Exit channel slope _____%

ANTI-SEEP COLLAR DESIGN

12. y = _____ft.; z = _____:1; pipe slope = _____%, Ls = _____ft.
    Use _____ collars, _____'-_____" square; projection = _____ft.

DESIGN ELEVATIONS

13. Riser Crest = _____ Design High Water = _____
    Emergency Spillway Crest = _____ Top of Dam = _____

*Surface area criteria: Pond Surface Area (A)/10 Year Peak Discharge (Q_{10}) $\geq$ .01

Figure 3.1.4c Temporary sediment basin design worksheet

Proposed 2023 Update

TEMPORARY SEDIMENT BASIN DESIGN DATA SHEET
INSTRUCTIONS FOR USE OF FORM

1. Minimum required detention volume is 134 cubic yards per acres from each acre of drainage area. Values larger than 134 cubic yards per acre may be used for greater protection. Compute volume using entire contributing drainage area, even if only part may be disturbed.
2. Surface area criteria is established such that the pond surface area (ac) during a 10-year frequency storm divided by the peak discharge (cfs) of the 10-year frequency storm shall have a ratio of at least 0.01.
3. If volume of basin is not adequate for required storage, excavate to obtain the required volume.
4. Peak rates of runoff values shall be based on USDA-NRCS methodology as outlined in TR 55 Urban Hydrology and/or TR 20 Project Formulation - Hydrology.
5. The principal spillway shall be designed to carry 0.2 cfs per acre of drainage area. The pipe shall be designed to carry Qp_{10} if site conditions preclude installation of an emergency spillway to protect the structure.
6. Determine value of “H” from field conditions. (“H” is the interval between the centerline of the barrel pipe at the outlet and the emergency spillway crest or, if there is no emergency spillway, to the design high water.)
7. See Pipe Spillway Design Charts (Figure 3.1.4d or Figure 3.1.4e).
8. See Riser Inflow curves (Figure 3.1.4f).
9. See Trash Rack and Anti-Vortex Device Design Table (Figure 3.1.4g).
10. Compute Qes by subtracting actual flow carried by the pipe spillway from the total inflow, Qp.
11. Use Figure 3.1.4h to obtain values of design depth of flow (Hp), bottom width, and design Qes. If no emergency spillway is to be used, so state, giving reason(s).
12. See Anti-Seep Collar Design Graph (Figure 3.1.4j).
13. Fill in design elevations. The emergency spillway crest must be set no closer to riser crest than value of "h" which causes pipe spillway to carry the minimum required Q. Therefore, the elevation difference between spillways shall be equal to the value of "h", or one foot, whichever is greater. Design high water is the elevation of the emergency spillway crest plus the value of Hp, or if there is no emergency spillway, it is the elevation of the riser crest plus "h" required to handle the 10-year storm. Minimum top of dam elevation requires 1.0 ft. of freeboard above design high water.

NOTE: A method for dewatering shall be incorporated into the design.

PIPE FLOW CHART (Full flow assumed)

For Corrugated Metal Pipe Inlet $K_e + K_b = 1.0$ and 70 feet of Corrugated Metal Pipe Conduit n = 0.025. Note correction factors for other pipe lengths.

Dia. / H	12"	15"	18"	21"	24"	30"	36"	42"
2	2.84	4.92	7.73	11.30	15.60	26.60	40.77	58.12
3	3.48	6.03	9.47	13.84	19.10	32.58	49.93	71.19
4	4.02	6.96	10.94	15.98	22.06	37.62	57.66	82.20
5	4.49	7.78	12.23	17.87	24.66	42.06	64.46	91.90
6	4.92	8.52	13.40	19.57	27.01	46.07	70.60	100.65
7	5.32	9.21	14.47	21.14	29.19	49.77	76.28	108.75
8	5.68	9.84	15.47	22.60	31.19	53.19	81.53	116.23
9	6.03	10.44	16.41	23.97	33.09	56.43	86.49	123.30
10	6.36	11.00	17.30	25.26	34.88	59.48	91.16	129.96
11	6.67	11.54	18.14	26.50	36.59	62.39	95.63	136.33
12	6.96	12.05	18.95	27.68	38.21	65.16	99.87	142.37
13	7.25	12.55	19.72	28.81	39.77	67.83	103.96	148.21
14	7.52	13.02	20.47	29.90	41.27	70.39	107.88	153.80
15	7.78	13.48	21.19	30.95	42.72	72.85	111.66	159.18
16	8.04	13.92	21.88	31.96	44.12	75.24	115.32	164.40
17	8.29	14.35	22.55	32.94	45.48	77.55	118.87	169.46
18	8.53	14.77	23.21	33.90	46.80	79.81	122.33	174.39
19	8.76	15.17	23.84	34.83	48.08	81.99	125.67	179.15
20	8.99	15.56	24.46	35.73	49.33	84.12	128.93	183.80
21	9.21	15.95	25.07	36.62	50.55	86.21	132.13	188.36
22	9.43	16.32	25.65	37.47	51.73	88.22	135.21	192.76
23	9.64	16.69	26.23	38.32	52.90	90.21	138.27	197.12
24	9.85	17.05	26.80	39.14	54.04	92.15	141.24	201.35
25	10.05	17.40	27.35	39.95	55.15	94.05	144.15	205.50
L	Correction Factors For Other Pipe Lengths							
40	1.23	1.22	1.20	1.19	1.16	1.14	1.13	1.11
50	1.14	1.13	1.12	1.11	1.10	1.09	1.08	1.07
60	1.07	1.06	1.06	1.05	1.05	1.04	1.04	1.03
70	1.00	1.00	1.00	1.00	1.00	1.00	1.00	1.00
80	0.95	0.95	0.95	0.96	0.96	0.96	0.97	0.97
90	0.90	0.91	0.91	0.92	0.92	0.93	0.94	0.94
100	0.86	0.87	0.88	0.89	0.89	0.90	0.91	0.92

Figure 3.1.4d Pipe flow chart for corrugated pipe drop inlet spillway
(Source: NRCS Engineering Field Manual, Chapter 6)

PIPE FLOW CHART (Full Pipe flow assumed)

For R/C Drop Inlet, $K_e + K_b = 0.65$ with 70 feet of R/C conduit, n = .013. Note correction factors for other pipe lengths.

Dia. / H	12"	15"	18"	21"	24"	30"	36"	42"
2	4.54	8.01	11.74	16.60	22.44	36.74	54.65	76.02
3	5.56	9.81	14.39	20.33	27.49	45.00	66.94	93.11
4	6.42	11.33	16.61	23.48	31.74	51.96	77.30	107.52
5	7.18	12.66	18.57	26.25	35.49	58.09	86.42	120.21
6	7.87	13.86	20.34	28.75	38.87	63.63	94.65	131.66
7	8.50	14.98	21.98	31.06	41.99	68.74	102.27	142.25
8	9.08	16.01	23.49	33.20	44.88	73.47	109.30	152.03
9	9.64	17.00	24.92	35.22	47.61	77.94	115.95	161.28
10	10.16	17.91	26.26	37.12	50.18	82.15	122.21	169.99
11	10.65	18.78	27.55	38.94	52.64	86.18	128.20	178.32
12	11.13	19.62	28.77	40.67	54.97	89.99	133.88	186.22
13	11.58	20.42	29.95	42.33	57.23	93.68	139.37	193.86
14	12.01	21.18	31.07	43.93	59.37	97.19	144.59	201.12
15	12.44	21.93	32.17	45.47	61.46	100.62	149.69	208.21
16	12.85	22.65	33.22	46.96	63.48	103.92	154.60	215.04
17	13.24	23.35	34.24	48.40	65.43	107.12	159.35	221.65
18	13.63	24.03	35.24	49.81	67.34	110.23	163.99	228.10
19	14.00	24.68	36.21	51.17	69.18	113.25	168.48	234.34
20	14.36	25.32	37.14	52.50	70.97	116.18	172.84	240.41
21	14.72	25.95	38.07	53.80	72.73	119.07	177.13	246.38
22	15.06	26.56	38.96	55.06	74.43	121.85	181.27	252.13
23	15.40	27.16	39.84	56.31	76.11	124.60	185.36	257.83
24	15.73	27.74	40.69	57.51	77.75	127.28	189.35	263.37
25	16.06	28.32	41.53	58.70	79.35	129.90	193.25	268.80
L	Correction Factors For Other Pipe Lengths							
40	1.15	1.13	1.11	1.09	1.08	1.06	1.06	1.05
50	1.09	1.08	1.07	1.06	1.05	1.04	1.04	1.03
60	1.04	1.04	1.04	1.03	1.03	1.02	1.02	1.02
70	1.00	1.00	1.00	1.00	1.00	1.00	1.00	1.00
80	0.96	0.96	0.97	0.97	0.98	0.98	0.98	0.99
90	0.93	0.94	0.94	0.95	0.95	0.96	0.97	0.97
100	0.90	0.91	0.92	0.93	0.93	0.95	0.95	0.96

Figure 3.1.4e Pipe flow chart for smooth pipe drop inlet spillway
(Source: NRCS, Engineering Field Manual, Chapter 6)

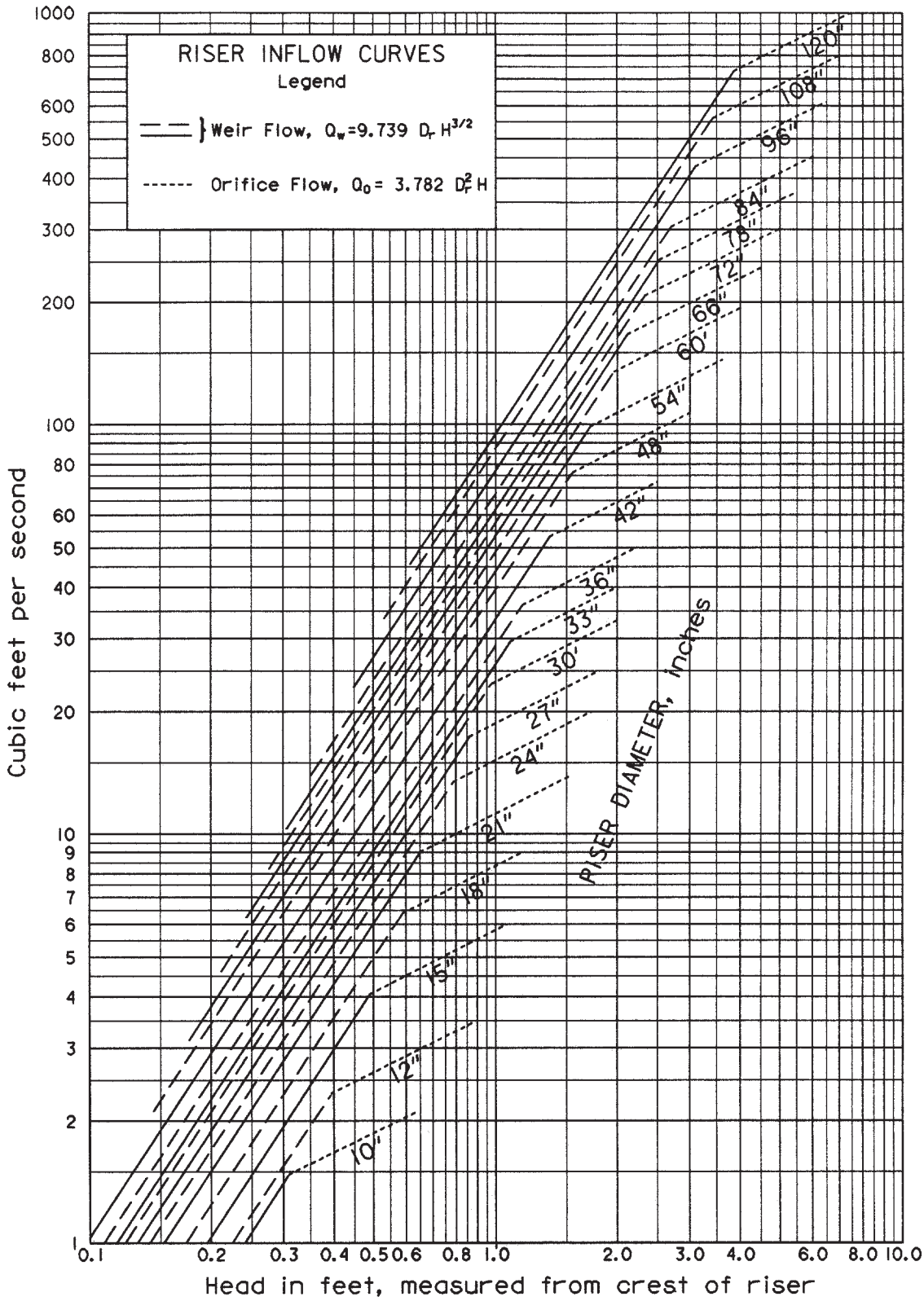

Figure 3.1.4f Riser inflow curves
(Source: USDA-NRCS-MD)

Proposed 2023 Update

CONCENTRIC TRASH RACK AND ANTI-VORTEX DESIGN TABLE

Riser Diameter, inches	Cylinder		Height, inches	Minimum Size Support Bar	Minimum Top	
	Diameter	Thickness, gage			Thickness	Stiffener
12	18	16	6	#6 Rebar or 1.5 x 1.5 x 3/16 angle	16 ga. (F&C)	-
15	21	16	7	" "	" "	-
18	27	16	8	" "	" "	-
21	30	16	11	" "	16 ga.(C), 14 ga. (F)	-
24	36	16	13	" "	" "	-
27	42	16	15	" "	" "	-
36	54	14	17	#8 Rebar	14 ga.(C), 12 ga. (F)	-
42	60	16	19	" "	" "	-
48	72	16	21	1.25" pipe or 1.25 x 1.25 x 0.25 angle	14 ga.(C), 10 ga. (F)	-
54	78	16	25	" "	" "	-
60	90	14	29	1.5" pipe or 1.5 x 1.5 x 0.25 angle	12 ga.(C), 8 ga. (F)	-
66	96	14	33	2" pipe or 2 x 2 x 3/16 angle	12 ga.(C), 8 ga. (F) w/stiffener	2 x 2 x 0.25 angle
72	102	14	36	" "	" "	2.5 x 2.5 x 0.25 angle
78	114	14	39	2.5" pipe or 2 x 2 x 0.25 angle	" "	" "
84	120	12	42	2.5" pipe or 2.5 x 2.5 x 0.25 angle	" "	2.5 x 2.5 x 5/16 angle

Note 1: The criterion for sizing the cylinder is that the area between the inside of the cylinder and the outside of the riser is equal to or greater than the area inside the riser. Therefore, the above table is invalid for use with concrete pipe risers.

Note 2: Corrugation for 12"-36" pipe measures 2 2/3" x 1/2"; for 42"-84" the corrugation measures 5" x 1" or 8" x 1".

Note 3: C = corrugated; F = flat.

Figure 3.1.4g Trash rack and anti-vortex design table
(Source: USDA-NRCS-MD)

Emergency Spillway Widths (feet)		
	Depth of Flow (feet)	
cfs	1.0	1.5
15	10	
20	13	
25	17	
30	20	
35	24	9
40	27	10
45	30	11
50	33	12
60	40	15
70	47	17
80	54	19
90	60	22
100	67	24
125	84	30
150	100	36
175	117	42
200	134	48
250	167	60
300	200	72

The exit slopes for emergency spillways with flow depths of 1.0 and 1.5 feet must fall within the following ranges for this table to be used.

Flow depth	Exit slope (%) Minimum	Maximum
1.0	5	15
1.5	4	8

Figure 3.1.4h Emergency spillway design table
(Source: NRCS, Engineering Field Manual, Chapter 11)

Anti-Seep Collar Design

This procedure provides the anti-seep collar dimensions for only temporary sediment basins to increase the seepage length by 15% for various pipe slopes, embankment slopes and riser heights.

The first step in designing anti-seep collars is to determine the length of pipe within the saturated zone of the embankment. This can be done graphically or by the following equation, assuming that the upstream slope of the embankment intersects the invert of the pipe at its upstream end. (See Figure 3.4.1i below for embankment-invert intersection.)

$$Ls = Y(z+4)\left[1 + \frac{Sp}{0.25-Sp}\right]$$

Where: Ls = length of pipe in the saturated zone (ft.)

Y = distance in feet from upstream invert of pipe to highest normal water level expected to occur during the life of the structure, usually the top of the riser.

Z = slope of upstream embankment as a ratio of z ft. horizontal to one ft. vertical.

Sp = slope of pipe in feet per foot.

This procedure is based on the approximation of the phreatic line as shown in Figure 3.1.4i below:

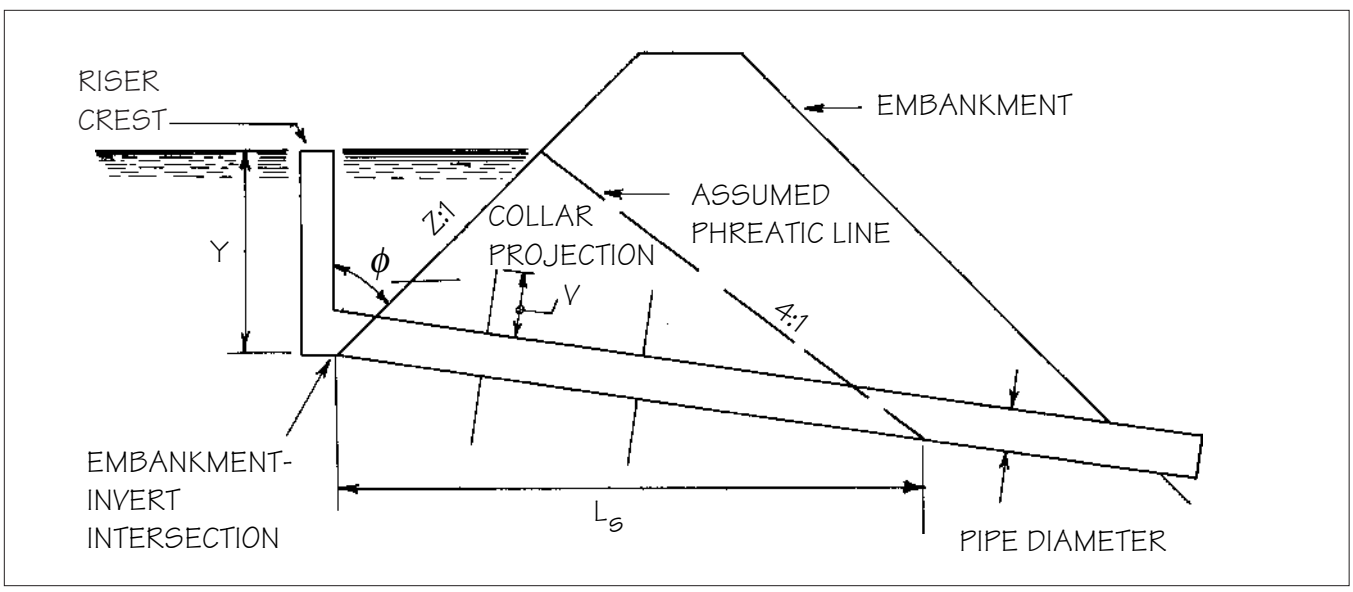

Figure 3.1.4i Terminilogy for anti-seep collar design

Proposed 2023 Update

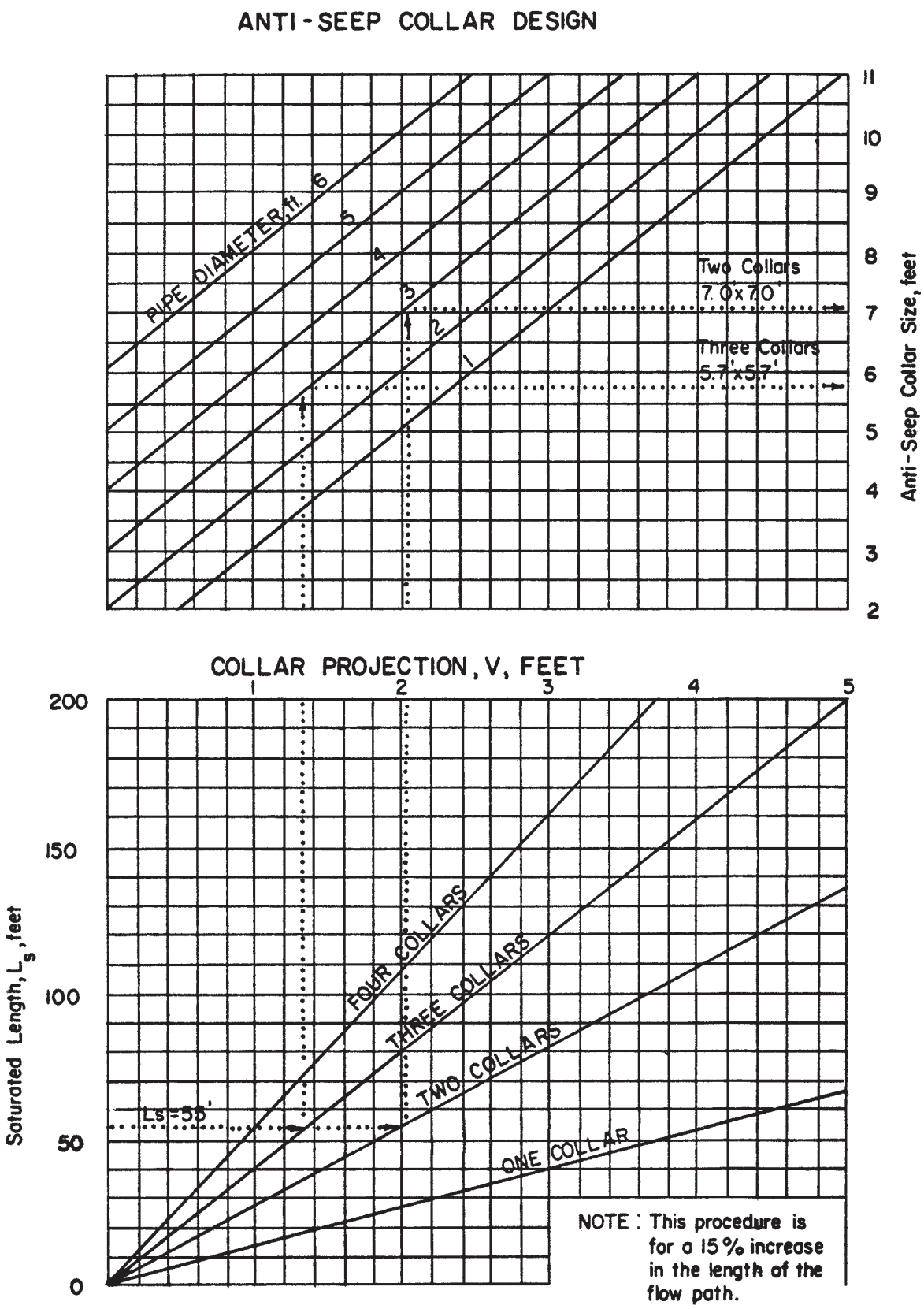

Figure 3.1.4j Anti-seep collar design graph
(Source: USDA-NRCS-MD)

Proposed 2023 Update

Standard Detail & Specifications

Temporary Sediment Basin

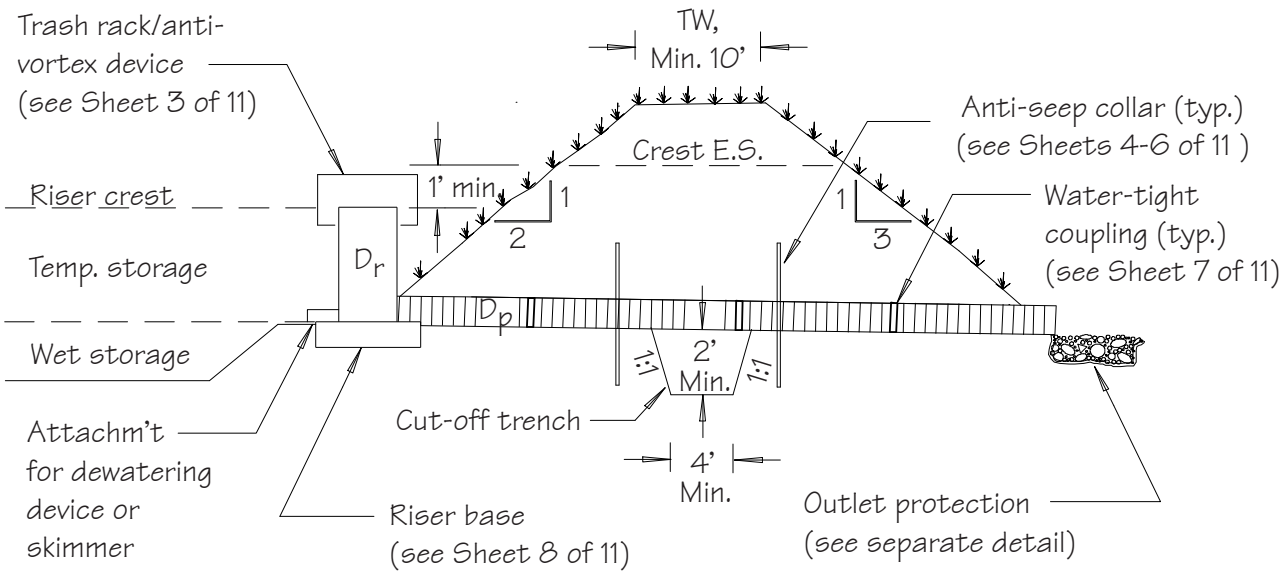

Section thru Principal Spillway

DATA

Drainage area (D.A.)	Crest of riser (El)	Crest of e.s. (El)
Required storage (V_s)	Riser dia. (D_r)	E.S. depth (d)
Design dimensions (L x W x D)	Pipe material	E.S. width (b)
Clean-out elev. (El)	Length of pipe (L)	Anti-seep collars (No.)
Embankment top width (TW)	Pipe dia. (D_p)	Collar dim. (L X W)
Top of embankment (El)	Pipe inverts (El)	Collar spacing (Ft)
Angle of pipe at riser (Deg.)		

See Sheet 3 of 11 for req'd trash rack/anti-vortex device data

Source:	Symbol:	Detail No.
DE ESC Handbook	TSB	DE-ESC-3.1.4 Sheet 1 of 11

Proposed 2023 Update

Standard Detail & Specifications

Temporary Sediment Basin

Emergency Spillway Details

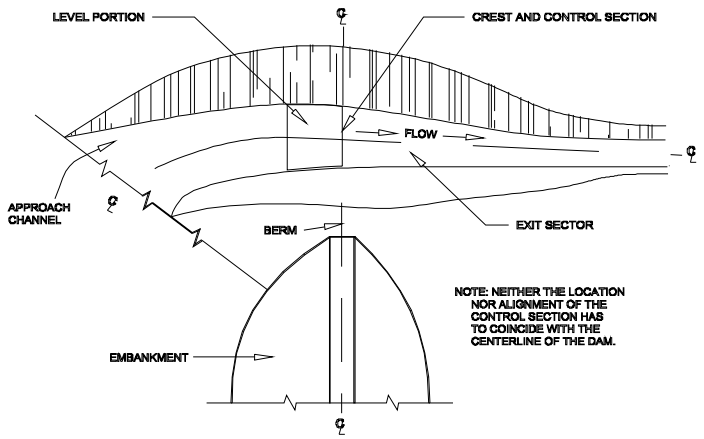

Plan

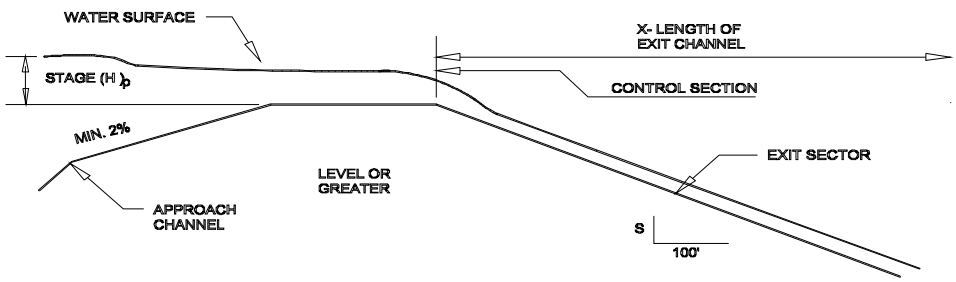

Profile

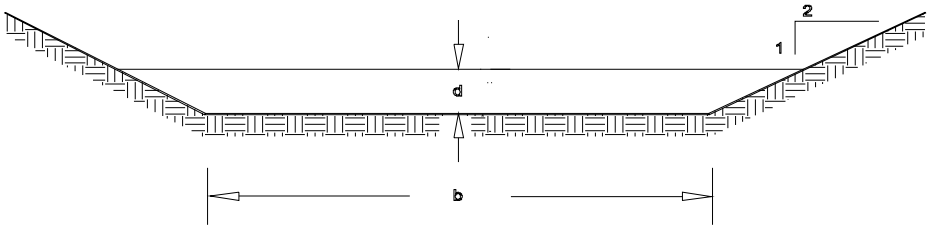

Cross-section

Source:	Symbol:	Detail No.
Adapted from USDA-NRCS	TSB	DE-ESC-3.1.4 Sheet 2 of 11

Proposed 2023 Update

Standard Detail & Specifications

Temporary Sediment Basin

Detail - Trash Rack and Anti-Vortex Device

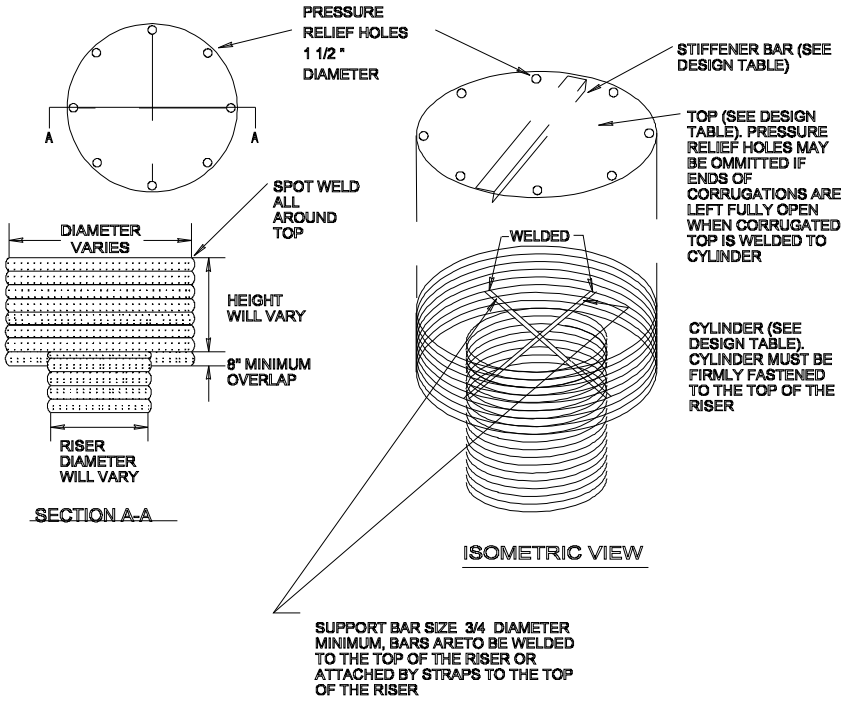

Data

Top stiffener (if required) is ____x____x____ angle welded to top and oriented perpendicular to corrugations.

Top is _____ gage corrugated metal or 1/8" steel plate. Pressure relief holes may be omitted, if ends of corrugations are left fully open when corrugated top is welded to cylinder.

Cylinder is ____ gage corrugated metal pipe or fabricated from 1/8" steel plate.

Dia. = _____

H = _____

Notes:
1. The cylinder must be firmly fastened to the top of the riser.
2. Support bars are welded to the top of the riser or attached by straps bolted to top of riser.

Source:	Symbol:	Detail No.
Adapted from MD Stds. & Specs. for ESC	TSB	DE-ESC-3.1.4 Sheet 3 of 11

Proposed 2023 Update

Temporary Sediment Basin

Detail - One-Piece Metal Anti-Seep Collar

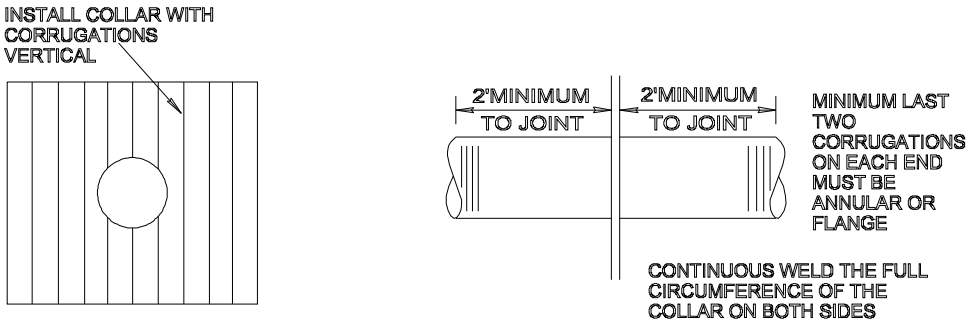

COLLAR WELDED IN PLACE ON BARREL SECTION

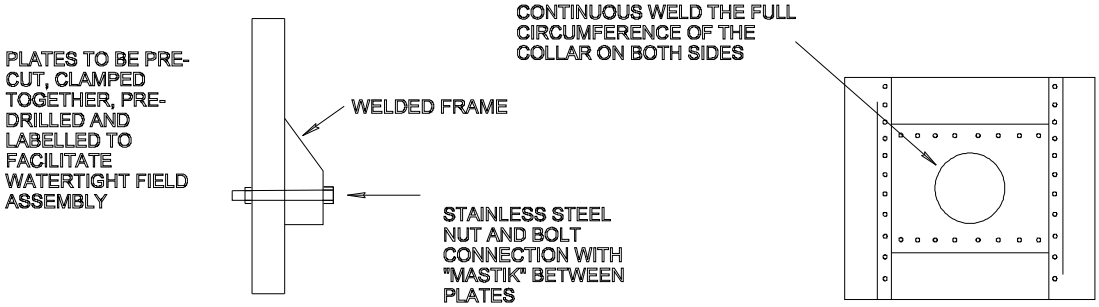

ANTI-SEEP COLLAR DESIGN

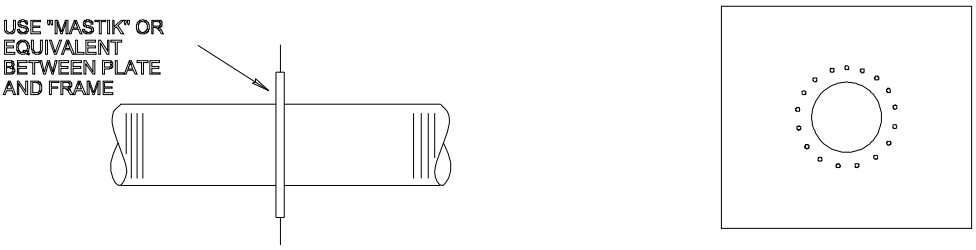

COLLAR FOR FLANGE JOINT PIPE

Source:	Symbol:	Detail No.
Adapted from MD Stds. & Specs. for ESC	TSB	DE-ESC-3.1.4 Sheet 4 of 11

Proposed 2023 Update

Standard Detail & Specifications

Temporary Sediment Basin

Detail - Two-Piece Corrugated Metal Anti-Seep Collar

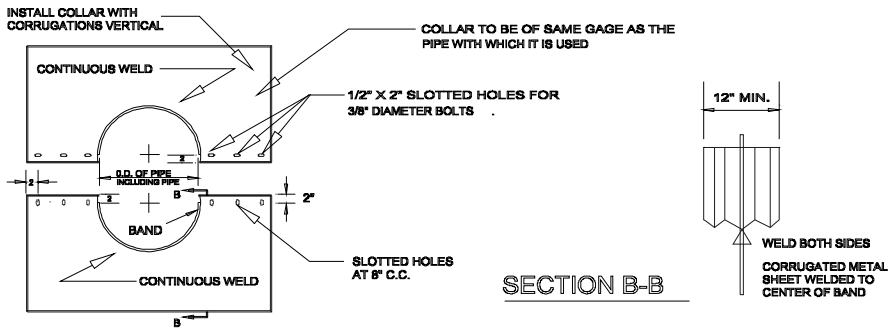

ELEVATION OF UNASSEMBLED COLLAR

SECTION B-B

NOTES FOR COLLARS:

1. ALL MATERIALS TO BE IN ACCORDANCE WITH CONSTRUCTION AND CONSTRUCTION MATERIAL SPECIFICATIONS.
2. WHEN SPECIFIED ON THE PLANS, COATING OF COLLARS SHALL BE IN ACCORDANCE WITH CONSTRUCTION AND CONSTRUCTION MATERIAL SPECIFICATIONS.
3. UNASSEMBLED COLLARS SHALL BE MARKED BY PAINTING OR TAGGING TO IDENTIFY MATCHING PAIRS.
4. THE LAP BETWEEN THE TWO HALF SECTIONS AND BETWEEN THE PIPE AND CONNECTING BAND SHALL BE CAULKED WITH ASPHALT MASTIC AT TIME OF INSTALLATION.
5. EACH COLLAR SHALL BE FURNISHED WITH TWO 1/2" DIAMETER RODS WITH STANDARD TANK LUGS FOR CONNECTING COLLARS TO PIPE.

Detail - Two-Piece Helical Pipe Anti-Seep Collar

SIZE AND SPACING OF SLOTTED OPENINGS SHALL BE THE SAME AS SHOWN FOR CM COLLAR

USE RODS AND LUGS TO CLAMP BANDS SECURELY TO PIPE.

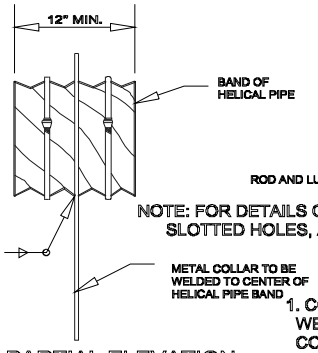

PARTIAL ELEVATION

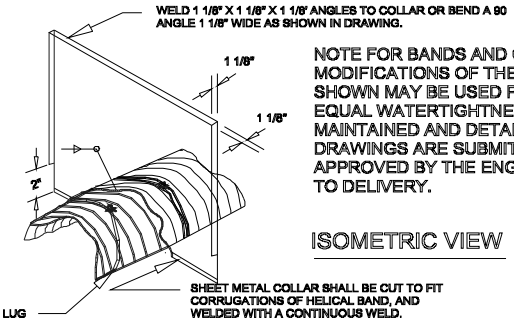

ISOMETRIC VIEW

NOTE FOR BANDS AND COLLARS: MODIFICATIONS OF THE DETAILS SHOWN MAY BE USED PROVIDING EQUAL WATERTIGHTNESS IS MAINTAINED AND DETAILED DRAWINGS ARE SUBMITTED AND APPROVED BY THE ENGINEER PRIOR TO DELIVERY.

NOTE: FOR DETAILS OF FABRICATION DIMENSIONS, MINIMUM GAGES, SLOTTED HOLES, AND NOTES, SEE DETAIL ABOVE.

NOTE: TWO OTHER TYPES OF ANTI-SEEP COLLARS ARE:

1. CORRUGATED METAL, SIMILAR TO UPPER, EXCEPT SHOP WELDED TO A SHORT (4FT.) SECTION OF THE PIPE AND CONNECTED WITH CONNECTING BANDS TO THE PIPE.
2. CONCRETE, SIX INCHES THICK FORMED AROUND THE PIPE WITH #3 REBAR SPACED 15" HORIZONTALLY AND VERTICALLY.

Source:	Symbol:	Detail No.
Adapted from VA ESC Handbook	TSB	DE-ESC-3.1.4 Sheet 5 of 11

Proposed 2023 Update

Temporary Sediment Basin

Detail - Flexible Anti-Seep Collar

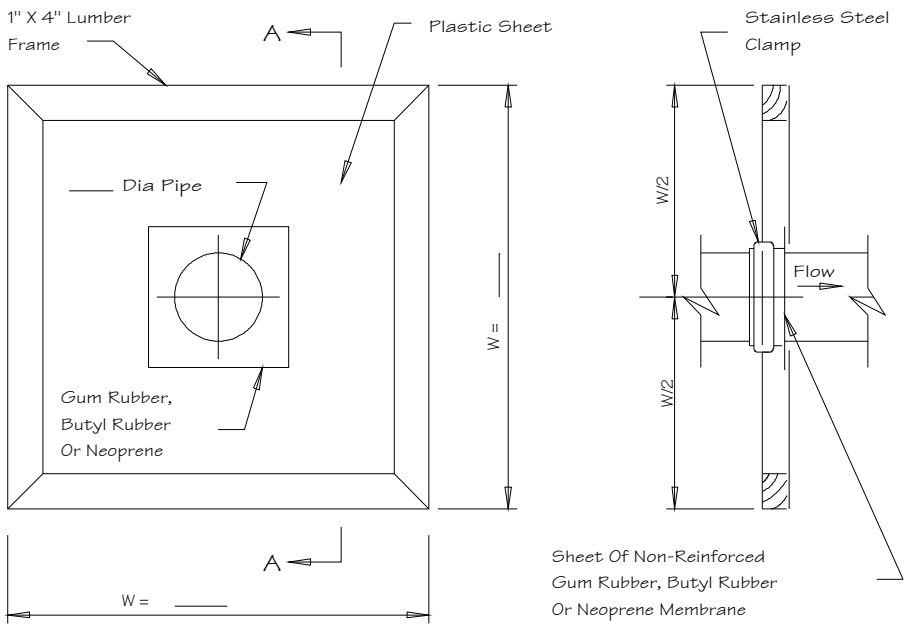

ELEVATION

SECTION A-A

NOTES:

1. Helical pipe shall have a mastic sealer applied at the collar location. The sealer will not be required for PVC or annular pipe.
2. The center membrane section may be 1/16 inch gum rubber, butyl rubber or neoprene. The entire antiseep may be made of these materials.
3. The outer portion of the antiseep collar, away from the pipe, may be made of a minimum 20 mil plastic sheet.
4. Cut a hole, 3 inches smaller than the diameter of the pipe, centered on the material used at the pipe and force it over the end of the pipe.
5. The antiseep material shall be fastened to the pipe using a stainless steel clamp.
6. Completed installation must be watertight.
7. Care must be taken to back fill equally on both sides of the antiseep collar.

Source:	Symbol:	Detail No.
Adapted from IL Urban Manual	TSB	DE-ESC-3.1.4 Sheet 6 of 11

Proposed 2023 Update

Standard Detail & Specifications

Temporary Sediment Basin

Detail - Water-Tight Connectors

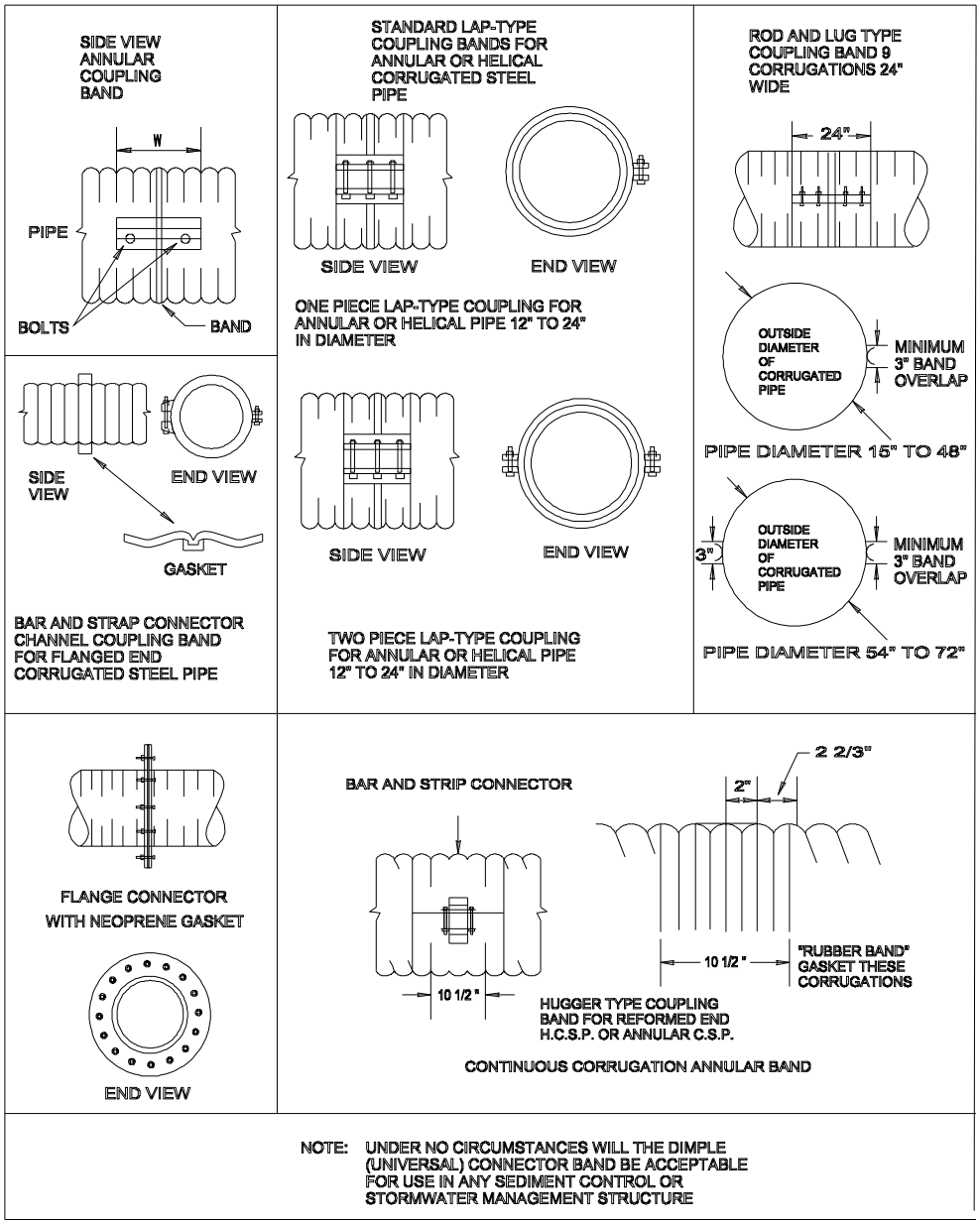

Source:	Symbol:	Detail No.
Adapted from MD Stds. & Specs. for ESC	TSB	**DE-ESC-3.1.4** Sheet 7 of 11

Proposed 2023 Update

Temporary Sediment Basin

RISER BASE DETAIL

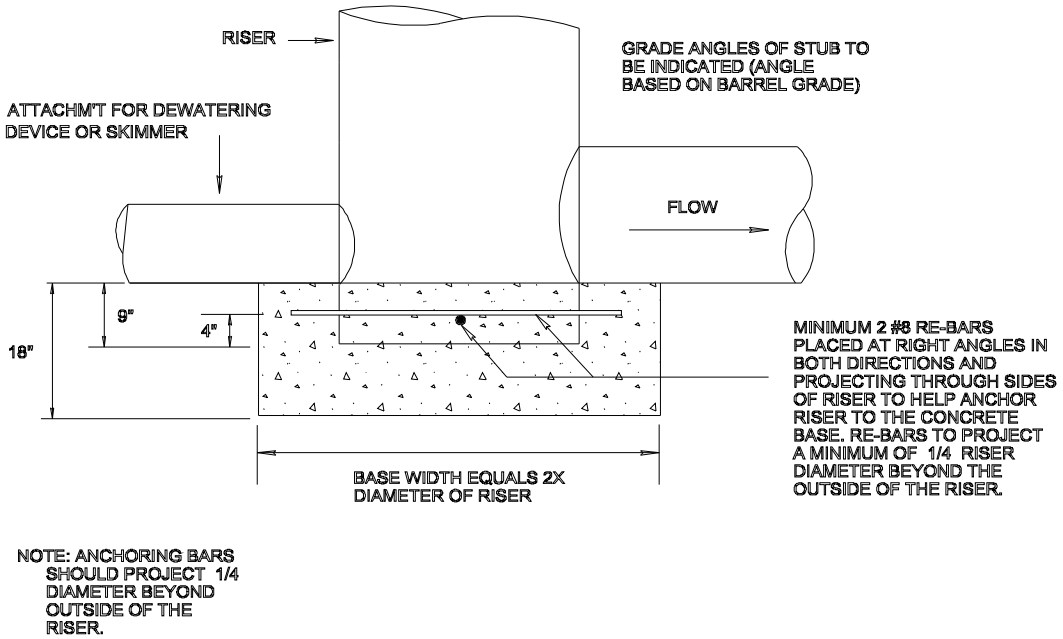

Notes:

1. The concrete base shall be poured in such a manner to insure that the concrete fills the bottom of riser to the invert of the outlet pipe to prevent the riser from breaking away from the base.

2. With aluminum or aluminized pipe, the embedded section must be painted with zinc chromate or equivalent.

3. Riser base may be sized as computed using floatation with a factor of safety of 1.2.

Source:	Symbol:	Detail No.
Adapted from MD Stds. & Specs. for ESC	TSB	DE-ESC-3.1.4 Sheet 8of 11

Proposed 2023 Update

Standard Detail & Specifications

Temporary Sediment Basin

Example Baffle Configurations

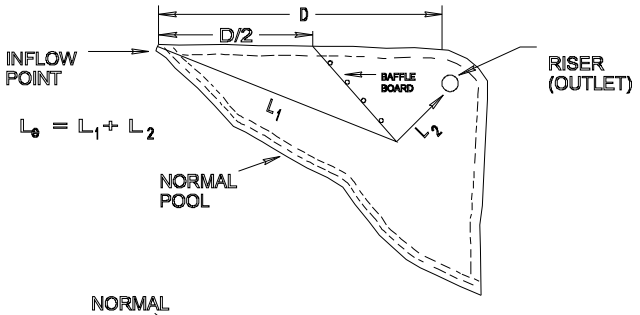

D = DISTANCE BETWEEN INFLOW AND OUTFLOW

A = AREA OF NORMAL POOL

W^e = EFFECTIVE WIDTH = A/D

L^e = TOTAL DISTANCE FROM THE INFLOW POINT AROUND THE BAFFLES TO THE RISER

FORMULA: $\frac{L^e}{W^e} \geq 2$

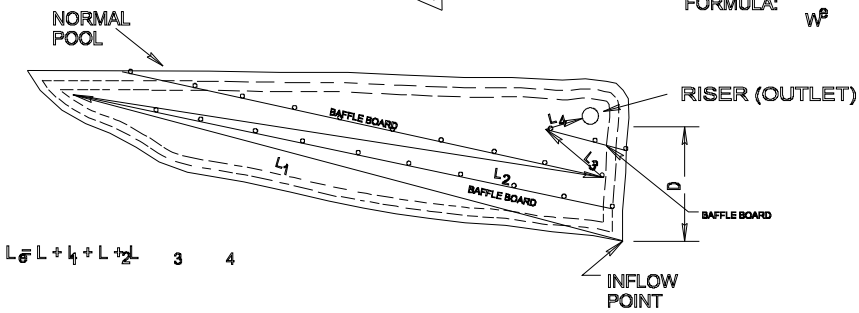

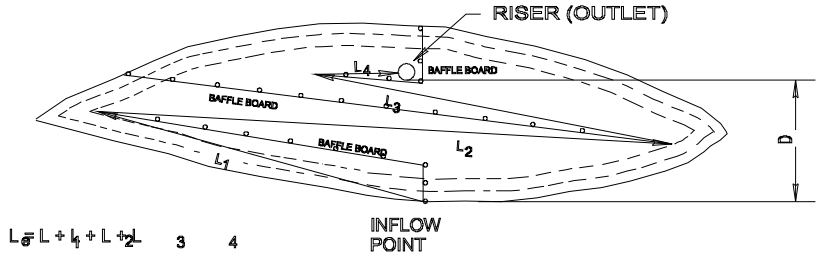

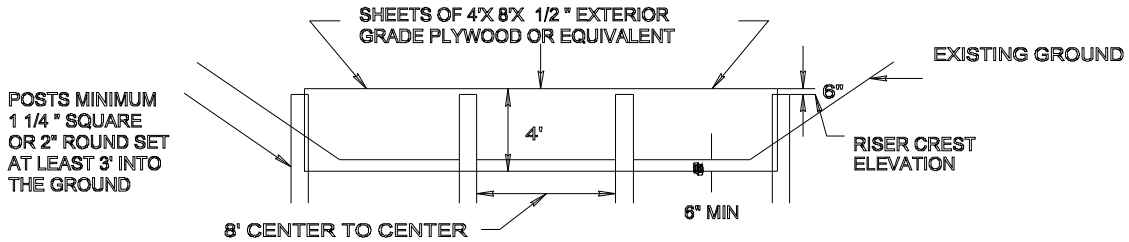

Source:	Symbol:	Detail No.
Adapted from MD Stds. & Specs. for ESC	TSB	DE-ESC-3.1.4 Sheet 9 of 11

Proposed 2023 Update

Temporary Sediment Basin

Construction Notes:

1. **Site Preparation**
   Areas under the embankment shall be cleared, grubbed, and stripped of topsoil. In order to facilitate clean-out and restoration, the pool area (measured at the top of the pipe spillway) will be cleared of all brush, trees, and other objectionable materials.

2. **Cut-off-trench**
   A cut-off trench shall be excavated along the centerline of earth fill embankments. The minimum depth shall be two feet. The cut-off trench shall extend up both abutments to the riser crest elevation. The minimum bottom width shall be four feet, but wide enough to permit operation of excavation and compaction equipment. The side slopes shall be no steeper than 1:1. Compaction requirements shall be the same as those for embankment. The trench shall be dewatered during the backfilling and compaction operations.

3. **Embankment**
   The fill material shall be taken from approved areas shown on the plans. It shall be clean mineral soil free of roots, woody vegetation, oversized stones, rocks, or other objectionable material. Relatively pervious materials such as sand or gravel (Unified Soil Classes GW, GP, SW & SP) shall **not** be placed in the embankment. Areas on which fill is to be placed shall contain sufficient moisture so that it can be formed by hand into a ball without crumbling. If water can be squeezed out of the ball, it is too wet for proper compaction. Fill material shall be placed in six-inch to eight-inch thick continuous layers over the entire length of the fill. Compaction shall be obtained by routing and hauling the construction equipment over the fill so that the entire surface of each layer of the fill is traversed by at least one wheel or tread track of the equipment or by the use of a compactor. The embankment shall be constructed to an elevation 10 percent higher than the design height to allow for settlement.

4. **Pipe Spillways**
   The riser shall be securely attached to the barrel or barrel stub by welding the full circumference making a watertight connection. The barrel stub must be attached to the riser at the same percent (angle) of grade as the outlet conduit. The connection between the riser and the riser base shall be water tight. All connections between barrel sections must be achieved by approved watertight band assemblies. The barrel and riser shall be placed on a firm, smooth foundation of impervious soil. Pervious materials such as sand, gravel, or crushed stone shall not be used as backfill around the pipe or anti-seep collars. The fill material around the pipe spillway shall be placed in four inch layers and compacted by means of a manually directed power tamper under and around the pipe to at least the same density as the adjacent embankment. A minimum depth of two feet of hand compacted backfill shall be placed over the pipe spillway before crossing it with construction equipment. Steel base plates on risers shall have at least 2-1/2 feet of compacted earth, placed over it to prevent flotation.

Source:	Symbol:	Detail No.
DE ESC Handbook	TSB	**DE-ESC-3.1.4** Sheet 10 of 11

Temporary Sediment Basin

Construction Notes (cont.):

5. **Emergency Spillway**
   The emergency spillway shall be installed in undisturbed ground. The achievement of planned elevations, grades, design width, entrance and exit channel slopes are critical to the successful operation of the emergency spillway and must be constructed within a tolerance of + 0.2 feet.

6. **Vegetative Treatment**
   Stabilize the embankment and emergency spillway in accordance with the appropriate Vegetative Standard and Specifications immediately following construction. In no case shall the embankment remain unstabilized for more than seven (7) days.

7. **Safety**
   State and local requirements shall be met concerning fencing and signs, warning the public of hazards of soft sediment and floodwater.

8. **Maintenance**
   a. Repair all damages caused by soil erosion and construction equipment at or before the end of each working day.
   b. **An approved dewatering device shall be considered an integral part of the basin. Dewatering operations shall be conducted in accordance with any and all regulatory requirements.**
   c. Sediment shall be removed from the basin when it reaches the specified distance below the top of the riser. This sediment shall be placed in such a manner that it will not erode from the site. The sediment shall not be deposited downstream from the embankment, or adjacent to a stream or floodplain.

9. **Final Disposal**
   When temporary structures have served their intended purpose and the contributing drainage area has been properly stabilized, the embankment and resulting sediment deposits are to be leveled or otherwise disposed of in accordance with the approved sediment control plan. The proposed use of a sediment basin site will often dictate final disposition of the basin and any sediment contained therein. If the site is scheduled for future construction, then the basin material and trapped sediments must be removed, safely disposed of, and backfilled with a structural fill. When the basin area is to remain open space the pond may be pumped dry, graded and backfilled.

Source:	Symbol:	Detail No.
DE ESC Handbook	TSB	**DE-ESC-3.1.4** Sheet 11 of 11

This page left intentionally blank.