STATE OF DELAWARE
DEPARTMENT OF NATURAL RESOURCES AND ENVIRONMENTAL CONTROL
DIVISION OF PARKS AND RECREATION

AUBURN VALLEY STATE PARK
FARM LANE BRIDGE PHASE 2

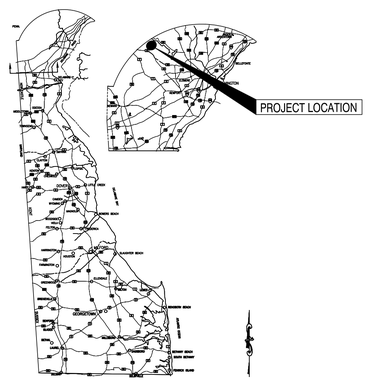

LOCATION MAP

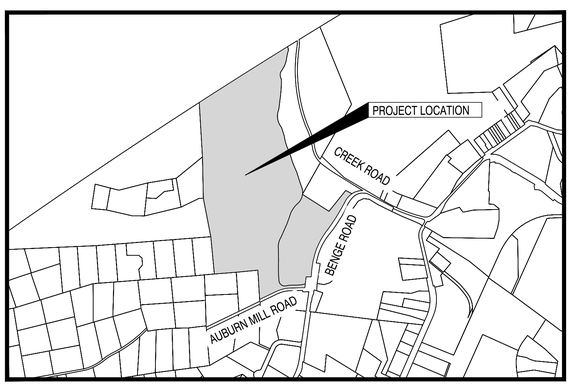

SITE MAP

CONTRACT NO. NAT21021-AVFARMLANE
AUGUST 2021

DELAWARE STATE PARKS
YOUR OUTDOOR ADVENTURE STARTS HERE

INDEX OF SHEETS FOR
CONTRACT NO. NAT21021-AVFARMLANE

SHEET NO.:	TITLE
C300	COVER SHEET
C301	PROJECT NOTES & LEGEND
C302	SITE CONTROL PLAN
C303	PHASING PLAN
C304	DEMOLITION PLAN
C305	TYPICAL SECTIONS
C306	HORIZONTAL ALIGNMENT
C307	PARTIAL SITE PLAN - 1
C308	PARTIAL SITE PLAN - 2
C309	PARTIAL SITE PLAN - 3
C310	PROFILE - FARM LANE
C311	CONSTRUCTION DETAILS
C313	SIGNING AND STRIPING PLAN
C314	SIGNING AND STRIPING PLAN
C315	SIGNING AND STRIPING DETAILS
C316	RACEWAY BRIDGE - RACEWAY BRIDGE
C320	RACEWAY CULVERT PLAN & ELEVATION
C321	RACEWAY CULVERT DETAILS
C360	WINGWALL I EXTENSION - PARKING LOT
C361	WINGWALL II EXTENSION
C362	WINGWALL III EXTENSION
C363	WINGWALL IV EXTENSION
C380	BRIDGE RAILINGS
C381	RAILING CONNECTIONS
C400	BORING LOGS
TT100	TURNING TEMPLATE PLAN - 1
TT101	TURNING TEMPLATE PLAN - 2
ES500	EROSION AND SEDIMENT CONTROL COVER SHEET
ES501	PRE-DEVELOPMENT EROSION AND SEDIMENT CONTROL PLAN
ES502	POST-DEVELOPMENT EROSION AND SEDIMENT CONTROL PLAN
ES503	EROSION AND SEDIMENT CONTROL DETAILS
ES504	EROSION AND SEDIMENT CONTROL DETAILS
ES505	EROSION AND SEDIMENT CONTROL DETAILS
ES506	EROSION AND SEDIMENT CONTROL DETAILS

SHEET NO.:	TITLE
S601	BRIDGE PLAN AND ELEVATION
S602	STRUCTURE GENERAL NOTES
S603	STAKE–OUT PLAN
S605	ABUTMENT A FOOTING PLAN
S606	ABUTMENT A PILE PLAN
S607	ABUTMENT A FOOTING REINFORCING PLAN
S608	ABUTMENT B FOOTING PLAN
S609	ABUTMENT PILE PLAN
S610	ABUTMENT B FOOTING REINFORCING PLAN
S611	ABUTMENT A PLAN AND ELEVATION
S612	ABUTMENT A TYPICAL SECTION
S613	ABUTMENT A CORNER SECTIONS & DETAILS
S614	WING WALL 1
S615	WING WALL 2
S616	ABUTMENT B PLAN AND ELEVATION
S617	ABUTMENT B TYPICAL SECTION
S618	ABUTMENT B CORNER SECTIONS & DETAILS
S619	WING WALL 3
S620	WING WALL 4
S621	PIER PLAN, ELEVATION AND SECTION
S622	BEARING DETAILS
S623	SUPERSTRUCTURE TYPICAL SECTION
S624	FRAMING PLAN
S625	GIRDER 1 AND 4 PLAN, ELEVATION AND SECTION
S626	GIRDER 2 AND 5 PLAN, ELEVATION AND SECTION
S627	GIRDER 3 AND 6 PLAN, ELEVATION AND SECTION
S628	CAMBER TABLE
S629	STEEL DIAPHRAGM DETAILS
S630	BRIDGE DECK REINFORCING DETAILS
S631	APPROACH SPAN 1 DECK ELEVATIONS
S632	APPROACH SPAN 2 DECK ELEVATIONS
S633	CONCRETE END DIAPHRAGM AT ABUTMENT DETAIL
S634	CONCRETE END DIAPHRAGM AT PIER DETAILS
S635	DETAILS – 1
S636	DETAILS – 2
S637	DETAILS – 3

REVISIONS:
DATE: DESCRIPTION: BY:

AUBURN VALLEY STATE PARK
FARM LANE BRIDGE PHASE 2
COVER SHEET

SEAL:
WALTER J. HOEY, III
REGISTERED
NO. 11204
DELAWARE
PROFESSIONAL ENGINEER
8/19/2021

CIVIL ENGINEER:
CENTURY ENGINEERING
CONSULTING ENGINEERS, SURVEYORS
550 S. BAY ROAD
DOVER, DELAWARE 19901

CONTRACT NO.: 175013.09

DELAWARE STATE PARKS
YOUR OUTDOOR ADVENTURE STARTS HERE

DESIGNED BY: WJH
DRAWN BY: ZTP/DLD
CHECKED BY: AES
DATE: AUGUST 2021
SCALE: NONE
SHEET NO.: C300
CONTRACT NO.: NAT21021-AVFARMLANE

CIVIL ENGINEER
PREPARED BY:
CENTURY ENGINEERING
CONSULTING ENGINEERS, SURVEYORS
550 SOUTH BAY ROAD DOVER, DELAWARE 19901 (302) 734-9188
SIGNATURE DATE
Seal

OWNER
OFFICE OF DESIGN & DEVELOPMENT
DELAWARE DIVISION OF PARKS & RECREATION
89 KINGS HIGHWAY
DOVER, DELAWARE 19901
(302) 739-9231
(302) 739-7026 (FAX)
SIGNATURE DATE

G:\Projects\175013.00 (DNREC 2017 Engineering DES)\175013.09 (Farm Lane Bridge)\CADD FILES 2\SHEETS\CONSTRUCTION PLANS\C300 - COVER SHEET.dwg, 8/20/2021 10:28 AM

PROJECT NOTES

1. THE INTENT OF THIS PROJECT IS TO PROVIDE THE FOLLOWING IMPROVEMENTS AT AUBURN VALLEY STATE PARK:
   1.1. CONSTRUCTION OF TWO (2) REINFORCED CONCRETE ABUTMENTS SUPPORTED BY STEEL MICROPILES.
   1.2. ERECTION OF TWO (2) CURVED STEEL GIRDER BRIDGE APPROACH SPANS, INCLUDING REINFORCED CONCRETE DECK AND PARAPETS.
   1.3. CONSTRUCTION OF TWO (2) EARTH EMBANKMENT APPROACHES ROADWAYS.
   1.4. INSTALLATION OF CONCRETE HEADWALLS AND REINFORCED CONCRETE PIPES AT THE RACEWAY CROSSING OF FARM LANE AND AT STORM PIPES BENEATH THE RELOCATED FARM LANE.
   1.5. CONSTRUCTION OF NEW ASPHALT ROADWAYS, SIDEWALKS, PARKING LOT AND TRAIL.
   1.6. SUPPLY AND INSTALLATION OF METAL PEDESTRIAN RAILING AND VEHICULAR GUARD RAIL ON THE EXISTING TRUSS BRIDGE, AND AT LOCATIONS SHOWN ON THE CONSTRUCTION PLANS.
   1.7. REMOVAL OF THE SUPERSTRUCTURE AND CENTER PIER OF THE EXISTING FARM LANE BRIDGE OVER THE RED CLAY CREEK FOLLOWING APPROVAL AND OPENING OF THE NEW FARM LANE ROADWAY.
2. THESE PLANS INCLUDE A PHASING PLAN INTENDED TO MAINTAIN ACCESS TO THE PRIVATE RESIDENCES. THE CONTRACTOR HAS THE OPTION TO USE THIS PLAN OR OFFER ONE OF HIS OWN FOR REVIEW AND APPROVAL BY DNREC PARKS. ACCESS TO THE EXISTING RESIDENCES SERVED BY FARM LANE SHALL REMAIN FOR THE DURATION OF THE CONSTRUCTION.
3. THE CONTRACTOR SHALL WORK CLOSELY WITH AND OBTAIN APPROVAL FROM DNREC PARKS FOR ALL LANE CLOSURES, DETOURS, AND LANE SHIFTS. 48 HOURS WRITTEN NOTICE IS REQUIRED FOR ALL LANE DETOURS AND SHIFTS. 72 HOURS WRITTEN NOTICE IS REQUIRED FOR ALL LANE CLOSURES. LANE CLOSURES MUST BE APPROVED BY DNREC PARKS AND MAY LAST NO MORE THAN TWO (2) HOURS.
4. STATE PARKS SHALL CLOSE FARM LANE AND THE PARKING LOTS TO ALL PARK USERS FOR THE DURATION OF THE CONSTRUCTION. RESIDENTS LIVING ON THE NORTH SIDE OF THE CREEK SHALL BE ALLOWED CONTINUOUS PASSAGE, INCLUDING ALL DELIVERIES AND EMERGENCY VEHICLES.
5. THE ROADWAYS AND ASSOCIATED IMPROVEMENTS SHALL FOLLOW, AS CLOSELY AS POSSIBLE, THE ALIGNMENT, PROFILE, CROSS SLOPE AND RUNNING SLOPE SHOWN ON THE TYPICAL SECTIONS AND PROFILE. MINOR ADJUSTMENT IN THE ALIGNMENT AND/OR PROFILE MAY BE REQUIRED BY THE ENGINEER IN THE FIELD. EXISTING MATERIAL EXCAVATED DURING THE GRADING OF THE ROADWAY AND PATHS MAY BE USED AS FILL MATERIAL ON THE SIDE SLOPES OF THE ROADWAYS PROVIDED IT MEETS THE REQUIREMENTS OF DELDOT BORROW TYPE F. EXISTING MATERIAL, NOT MEETING THE REQUIREMENTS OF BORROW, TYPE F AS DEFINED IN THE DELDOT STANDARD SPECIFICATIONS FOR ROAD AND BRIDGE CONSTRUCTION, SHALL NOT BE ALLOWED FOR BASE MATERIAL OF ANY PAVED OR GRAVEL AREAS.
6. ALL EXCAVATION FOR CONSTRUCTION OF THE PROPOSED IMPROVEMENTS SHALL BE IN ACCORDANCE WITH SECTION 202 – EXCAVATION AND EMBANKMENT, OF THE DELDOT STANDARD SPECIFICATIONS.
7. CLEARING AND GRUBBING IS ASSUMED TO EXTEND A MINIMUM OF SIX (6) INCHES BELOW EXISTING GRADE FOR THE LENGTH OF THE PROJECT. IN AREAS WHERE LARGE BOULDERS ARE ENCOUNTERED IN PAVEMENT SECTIONS, SUCH BOULDERS SHALL BE REMOVED AND STOCKPILES ON SITE FOR USE AS RIPRAP OR AS DIRECTED BY THE ENGINEER. CLEARING AND GRUBBING WITHIN THE LIMITS OF DISTURBANCE (LOD) SHALL CONSIST OF CLEARING, GRUBBING, REMOVING AND DISPOSING OF ALL TREES, VEGETATION AND DEBRIS.
8. TREE TRIMMING SHALL BE LIMITED TO A CORRIDOR NOT EXCEEDING 20 FEET WIDE AND 15 FEET HIGH CENTERED ON THE PROPOSED ROADWAY BASE LINE.
9. ALL TREE REMOVAL AND TREE TRIMMING WITHIN THE LIMITS OF DISTURBANCE, REGARDLESS OF SIZE, SHALL BE INCIDENTAL TO THE CONTRACT. TREES GREATER THAN 6" IN DIAMETER SHALL BE FLAGGED BY THE CONTRACTOR FOR REVIEW AND APPROVAL BY THE ENGINEER PRIOR TO REMOVAL. THE ENGINEER WILL NOT ACCEPT REMOVAL OF TREES INTENDED TO BE PROTECTED.
10. TREES NOT DESIGNATED TO BE REMOVED SHALL BE PROTECTED FROM CONSTRUCTION EQUIPMENT AND COMPACTION OF SOIL WITHIN THE DRIP LINE WITH 3-FOOT HIGH ORANGE SAFETY FENCE, AS SHOWN ON THE EROSION AND SEDIMENT CONTROL PLANS.
11. EXISTING UTILITIES ARE SHOWN IN ACCORDANCE WITH THE BEST AVAILABLE INFORMATION. COMPLETENESS OR CORRECTNESS THEREOF IS NOT GUARANTEED. IT SHALL BE THE CONTRACTOR'S RESPONSIBILITY TO CONTACT THE UTILITY COMPANIES INVOLVED IN ORDER TO SECURE THE MOST ACCURATE INFORMATION AVAILABLE AS TO UTILITY LOCATION AND ELEVATION. NO CONSTRUCTION AROUND OR ADJACENT TO UTILITIES SHALL BEGIN WITHOUT NOTIFYING THEIR OWNERS AT LEAST 48-HOURS IN ADVANCE. THE CONTRACTOR SHALL TAKE THE NECESSARY PRECAUTIONS TO PROTECT THE EXISTING UTILITIES AND MAINTAIN UNINTERRUPTED SERVICE AND ANY DAMAGE DONE TO THEM DUE TO HIS/HER NEGLIGENCE SHALL BE IMMEDIATELY AND COMPLETELY REPAIRED AT THE CONTRACTOR'S EXPENSE. TO LOCATE EXISTING UTILITIES IN THE FIELD PRIOR TO CONSTRUCTION, THE CONTRACTOR SHALL CONTACT MISS UTILITY OF DELAWARE. MISS UTILITY OF DELAWARE SHALL BE NOTIFIED TWO (2) CONSECUTIVE WORKING DAYS PRIOR TO EXCAVATION, AT 1-800-282-8555.
12. THESE DRAWINGS DO NOT INCLUDE ANY HAZARDOUS MATERIALS THAT MAY OR MAY NOT EXIST WITHIN THIS SITE. IN THE EVENT THAT HAZARDOUS MATERIALS ARE LOCATED, THE CONTRACTOR SHALL IMMEDIATELY STOP WORK AND CONTACT THE ENGINEER.

TRAFFIC CONTROL NOTES

1. ALL TEMPORARY TRAFFIC CONTROL AND TEMPORARY TRAFFIC CONTROL DEVICES SHALL BE IN ACCORDANCE WITH: THE CONTRACT DOCUMENTS, THE LATEST VERSION OF THE DELAWARE MANUAL ON UNIFORM TRAFFIC CONTROL DEVICES (HEREINAFTER REFERRED TO AS THE "DELAWARE MUTCD"), CURRENT STATE OF DELAWARE DEPARTMENT OF TRANSPORTATION STANDARD SPECIFICATIONS FOR ROAD AND BRIDGE CONSTRUCTION, AND SUPPLEMENTAL SPECIFICATIONS, INCLUDING ALL REVISIONS AS OF THE DATE OF THE ENTRANCE PERMIT APPROVAL.
2. CONTRACTOR SHALL SUPPLY MESSAGE BOARDS THAT ARE TO BE PLACED TEN (10) DAYS PRIOR TO CONSTRUCTION AND/OR TRAFFIC PATTERN CHANGES. THE MESSAGE BOARDS MUST REMAIN IN PLACE FIVE (5) DAYS AFTER WORK HAS STARTED AND/OR AFTER TRAFFIC PATTERN CHANGES. THE NUMBER OF MESSAGE BOARDS, LOCATIONS, AND WORDING ON THE MESSAGE BOARDS SHALL BE COORDINATED WITH THE DISTRICT SAFETY OFFICER
3. THE DEPARTMENT RESERVES THE RIGHT TO STOP THE CONTRACTOR'S OPERATIONS, IF, IN THE OPINION OF THE DEPARTMENT'S REPRESENTATIVE, THE CONTRACTOR'S OPERATIONS ARE NOT IN COMPLIANCE WITH THE DELAWARE MUTCD, THE SPECIFICATIONS OR THE PLANS OR IF THE CONTRACTOR'S OPERATIONS ARE DEEMED UNSAFE.
4. THE CONTRACTOR SHALL BE RESPONSIBLE FOR NOTIFYING THE LOCAL 911 CENTER, LOCAL SCHOOLS AND DELDOT COMMUNITY RELATIONS OF ALL ROADS AND LANES TO BE CLOSED A MINIMUM OF SEVEN (7) CALENDAR DAYS BEFORE THE CLOSURE.
5. THE CONTRACTOR SHALL BE RESPONSIBLE FOR ENSURING THAT THE TRANSPORTATION MANAGEMENT CENTER IS NOTIFIED EACH AND EVERY DAY WHEN WORK IS BEING PERFORMED IN STATE RIGHT-OF-WAY. THE CONTRACTOR SHALL IDENTIFY THE TYPE OF WORK, ANY LANE(S) OR SHOULDER(S) CLOSED, THE LENGTH OF TIME FOR WORK, WHEN THE LANE RESTRICTIONS ARE IN PLACE AND WHEN LANE RESTRICTIONS ARE LIFTED, CONTACT PERSON/PHONE NUMBER AND STATE INSPECTOR. THE TRANSPORTATION MANAGEMENT CENTER CAN BE REACHED AT (302) 659-4600.
6. WHEN SIDE ROADS INTERSECT THE WORK ZONE, ADDITIONAL TRAFFIC CONTROL DEVICES SHALL BE ERECTED INCLUDING PERMANENT WARNING SIGNS.
7. ALL STORAGE OF EQUIPMENT AND MATERIAL SHALL COMPLY WITH THE DELAWARE MUTCD, SECTION 6G.21.
8. ALL PAVEMENT MARKINGS THAT ARE NO LONGER IN USE AND CONFLICT WITH TEMPORARY PAVEMENT MARKINGS SHALL BE REMOVED AND COMPLETELY OBLITERATED BY A METHOD APPROVED BY THE ENGINEER. PAINTING OVER THE CONFLICTING PAVEMENT MARKINGS WILL NOT BE ACCEPTED AS A METHOD OF REMOVAL.
9. THE CONTRACTOR IS RESPONSIBLE FOR THE MAINTENANCE OF EXISTING PAVEMENT WITHIN THE PROJECT LIMITS FOR THE DURATION OF THE CONTRACT OR AS DIRECTED BY THE ENGINEER.
10. TYPICAL APPLICATIONS PER THE DELAWARE MUTCD SHALL BE INCORPORATED TO ACHIEVE REQUIRED TEMPORARY TRAFFIC CONTROL AND SAFETY REQUIREMENTS. THIS PROJECT IS SUBJECT TO THE FOLLOWING TYPICAL APPLICATIONS UNLESS DIRECTED OTHERWISE BY DELDOT DISTRICT SAFETY OFFICER: TYPICAL APPLICATION 1A-3A: WORK ON THE SHOULDER OF A MULTI-LANE DIVIDED HIGHWAY.
11. WITHIN THE MAINLINE WORK AREA, PERMANENT ADVANCE WARNING SIGNS WITH THE LEGENDS ROAD WORK AHEAD SHALL BE INSTALLED IN ADVANCE OF THE WORK AREA IN BOTH DIRECTIONS. AN END ROAD WORK SIGN SHALL BE LOCATED 500 FEET DOWNSTREAM FROM THE WORK AREA. ON INTERSECTING ROADWAYS WITHIN THE PROJECT LIMITS, A ROAD WORK AHEAD SIGN SHALL BE PLACED AT A DISTANCE NOT LESS THAN 500 FEET IN ADVANCE OF THE WORK AREA. ALL PERMANENT ADVANCE WARNING SIGNS SHALL BE GROUND MOUNTED ON TWO NCHRP-350 OR MASH APPROVED BREAKAWAY POSTS AND SHALL BE MOUNTED IN COMPLIANCE WITH THE DELAWARE MUTCD. PERMANENT ADVANCE WARNING SIGNS SHALL BE MOUNTED AT A HEIGHT OF 7 FEET, MEASURED FROM THE ROADWAY TO THE BOTTOM OF THE SIGN. THE USE OF SKID MOUNTED SIGN SUPPORTS IS NOT ALLOWED UNLESS THE CONTRACTOR CAN DEMONSTRATE THAT A UTILITY CONFLICT EXISTS, WHICH SHALL BE VERIFIED BY THE DISTRICT SAFETY OFFICER; OR CONCRETE MEDIANS PREVENT THE INSTALLATION OF THE PERMANENT ADVANCE WARNING SIGNS IN THE APPROPRIATE LOCATION.
12. THE USE OF MILLINGS AND GRADED AGGREGATE BASE COURSE (GABC) IN THE TRAVEL WAY, TEMPORARY TRAVEL WAY, HIGH VOLUME ENTRANCES AND ACCESS RAMP FOR THE PURPOSE OF PROVIDING A TEMPORARY ROADWAY SURFACE, POTHOLE REPAIR, TAPERED EDGE FOR UTILITIES, BUTT JOINTS, AND LONGITUDINAL DROP-OFFS (MILLING AND PAVING OPERATIONS) IS PROHIBITED UNLESS IT IS OTHERWISE DESIGNATED TO BE USED IN THE CONTRACT PLANS. USE COLD PATCH, BITUMINOUS CONCRETE, BITUMINOUS CONCRETE WEDGE, OR TAPER MILL, AS NOTED IN THE CONTRACT DOCUMENTS OR APPROVED BY THE ENGINEER.

    MILLINGS OR GABC SHALL BE USED AT THE FOLLOWING LOCATIONS WHERE ACCESS TO A BUSINESS, RESIDENCE, OR EDGE DROP OFF NEEDS TO BE MAINTAINED UNLESS OTHERWISE NOTED IN THE PLANS OR DIRECTED BY THE ENGINEER TO USE BITUMINOUS CONCRETE OR COLD PATCH. ALL MILLINGS AND GABC WILL BE ROLLED AND COMPACTED TO HELP PREVENT THE MATERIAL FROM UNRAVELLING:

    a. DRIVEWAYS
    b. ENTRANCES
    c. LOW VOLUME ACCESS RAMPS (IDENTIFIED IN THE CONTRACT DOCUMENTS)
    d. EDGE DROP-OFFS ADJACENT TO LIVE ROADWAY (LANES AND SHOULDER) AND THE PROPOSED ROAD CONSTRUCTION
    e. EDGE OF ROADWAY DROP-OFF

    THE BASE COURSE MATERIAL SHALL BE PLACED AT NO GREATER THAN THE SLOPE SPECIFIED IN THE DELAWARE MUTCD, TABLE 6G-1 AND SHALL BE COMPACTED.

    VERTICAL DIFFERENCES SHALL BE CORRECTED IN ACCORDANCE WITH THE DELAWARE MUTCD, TABLE 6G-1.
13. ACCEPTABLE MATERIALS FOR TEMPORARY PEDESTRIAN PATHS SHALL INCLUDE CONCRETE, HOT-MIX, COMPACTED MILLINGS OR PLYWOOD WALKWAY STRUCTURE. PLYWOOD WALKWAY STRUCTURES SHALL ALSO INCLUDE DETECTABLE EDGING AND RAILINGS IN ACCORDANCE WITH ADA GUIDELINES AND THE DELAWARE MUTCD. STONE OR GRADED AGGREGATE BASE COURSE SHALL NOT BE USED FOR TEMPORARY PEDESTRIAN PATHS.
14. THE CONTRACTOR SHALL ADD THE BICYCLE IN LANE (W11-1-DE) SIGN TO THE TYPICAL APPLICATION SIGNING STACK DURING CONSTRUCTION ACTIVITIES THAT RESTRICT USE OF THE EXISTING SHOULDER/BIKE LANE.

GENERAL NOTES

1. THE BASE SURVEY, INCLUDING ALL CONTOURS AND ELEVATIONS, IS BASED ON AERIAL SURVEY PROVIDE BY DNREC PARKS AND CONVENTIONAL SURVEY TAKEN IN THE FIELD.
2. SURVEY CONTROL: DELAWARE STATE COORDINATE SYSTEM (NAD83).
3. THE CONTRACTOR SHALL PROTECT ALL FEATURES NOT DESIGNATED TO BE REMOVED. DAMAGED ITEMS SHALL BE REPAIRED OR REPLACED AS DIRECTED BY DNREC, AT NO COST TO THE OWNER.
4. THE CONTRACTOR SHALL ONLY WORK WITHIN THE DESIGNATED LIMIT OF DISTURBANCE (LOD). ALL RUTS AND DEPRESSIONS CAUSED BY CONSTRUCTION ACTIVITY SHALL BE FILLED, TOPSOILED, SEEDED AND MULCHED TO MATCH THE ADJACENT AREA.
5. THE CONTRACTOR SHALL PROVIDE NECESSARY FACILITIES, INCLUDING BUT NOT LIMITED TO CONSTRUCTION TRAILER, STORAGE FACILITIES, AND RESTROOMS, DURING CONSTRUCTION.
6. THE CONTRACTOR SHALL NOTE THAT IN CASE OF DISCREPANCY BETWEEN THE SCALED AND THE FIGURED DIMENSIONS SHOWN ON THE PLANS, THE FIGURED DIMENSIONS SHALL GOVERN. THE CONTRACTOR SHALL BE RESPONSIBLE FOR CONFIRMING ALL DIMENSIONS.
7. THE CONTRACTOR SHALL DESIGNATE A PERSON WHO SHALL BE RESPONSIBLE FOR IMPLEMENTING AND MAINTAINING THE EROSION AND SEDIMENT CONTROL PLANS, A PERSON WHO SHALL BE RESPONSIBLE FOR IMPLEMENTING AND MAINTAINING THE TRAFFIC CONTROL, AND A PERSON WHO SHALL BE RESPONSIBLE FOR WORKER SAFETY. THE PERSON RESPONSIBLE FOR IMPLEMENTING AND MAINTAINING THE EROSION AND SEDIMENT CONTROL PLANS SHALL BE CERTIFIED BY DNREC FOR EROSION AND SEDIMENT CONTROL RESPONSIBILITY (CERTIFIED CONSTRUCTION REVIEWER – BLUE CARD).
8. THESE DRAWINGS DO NOT INCLUDE NECESSARY ELEMENTS OF CONSTRUCTION SAFETY. ALL CONSTRUCTION MUST BE COMPLETED IN ACCORDANCE WITH THE RULES AND REGULATIONS OF THE OCCUPATIONAL SAFETY AND HEALTH ACT, AND ALL FEDERAL, STATE AND LOCAL REQUIREMENTS. CONTRACTOR IS SOLELY RESPONSIBLE FOR ALL SITE SAFETY.
9. NO DEBRIS SHALL BE BURIED OR BURNED ON THE SITE UNLESS SPECIFICALLY NOTED WITHIN THESE PLANS OR SPECIFICATIONS.
10. BLASTING SHALL NOT BE ALLOWED.
11. WETLAND AND SUBAQUEOUS LANDS PERMITTING HAVE BEEN PERFORMED.
12. CONSTRUCTION STORMWATER MANAGEMENT PLANS HAVE BEEN APPROVED.
13. THE CONTRACTOR MUST OBTAIN A CERTIFIED THIRD PARTY CONSTRUCTION REVIEW (CCR) TO REVIEW AND INSPECT THE PROJECT DURING CONSTRUCTION. THE CCR SHALL PREPARE AND SUBMIT REPORTS IN ACCORDANCE WITH THE LATEST VERSION OF THE DELAWARE SEDIMENT AND STORMWATER REGULATIONS.

SPECIFICATIONS

ELEMENTS UNDER THIS CONTRACT SHALL BE CONSTRUCTED UTILIZING THE FOLLOWING INFORMATION IN THE HIERARCHY LISTED BELOW:

1. CONTRACT AGREEMENT BETWEEN OWNER AND CONTRACTOR.
2. APPROVED PLANS.
3. PROJECT MANUAL AND ENCLOSED TECHNICAL SPECIFICATIONS.
4. STATE OF DELAWARE DEPARTMENT OF NATURAL RESOURCES AND ENVIRONMENTAL CONTROL EROSION AND SEDIMENT CONTROL HANDBOOK, APRIL 2014 OR MOST CURRENT AT DATE OF ADVERTISEMENT.
5. DELAWARE DEPARTMENT OF TRANSPORTATION STANDARD CONSTRUCTION DETAILS, 2020, OR MOST CURRENT AT ADVERTISEMENT.
6. DELAWARE DEPARTMENT OF TRANSPORTATION STANDARDS AND SPECIFICATIONS FOR BRIDGE AND ROAD CONSTRUCTION, 2021, OR MOST CURRENT AT DATE OF ADVERTISEMENT.

MATERIALS:

THE CONTRACTOR SHALL OBTAIN A COPY OF THE DELDOT STANDARD SPECIFICATIONS, EITHER ON LINE OR HARD COPY, FOR REFERENCE TO ITEM NUMBERS NOTED IN THESE PLANS. MATERIALS SHALL CONFORM TO THE FOLLOWING DELDOT SPECIFICATIONS, UNLESS OTHERWISE NOTED OR DIRECTED BY THE ENGINEER:

1. HOT-MIX ASPHALT:
   1.1. ITEM 401044 – SUPERPAVE, TYPE C, PG 64-22 (NON-CARBONATE STONE).
   1.2. ITEM 401014 – SUPERPAVE, TYPE B, PG 64-22.
2. BASE COURSE:
   2.1. ITEM 302005 – GRADED AGGREGATE BASE COURSE, TYPE B.
3. GEOTEXTILE:
   3.1. ITEM 713002 – GEOTEXTILES SEPARATION.

THE CONTRACTOR SHALL OBTAIN A COPY OF THE DNREC DELAWARE EROSION & SEDIMENT CONTROL HANDBOOK FOR REFERENCE TO STANDARD DETAILS AND METHODS FOR STABILIZATION AND POLLUTION CONTROL INCLUDING, BUT NOT LIMITED TO:

1. SILT FENCE,
2. TOPSOILING,
3. STABILIZED CONSTRUCTION ENTRANCE
4. VEGETATIVE STABILIZATION,
5. MULCHING,
6. DUST CONTROL,
7. CONSTRUCTION SITE WASTE MANAGEMENT & SPILL CONTROL,
8. SENSITIVE AREA PROTECTION.

BEAMCLAMP CONNECTIONS USED IN CONNECTIONS FOUND IN THE NEW VEHICULAR RAILING ON THE EXISTING TRUSS BRIDGE ARE BY:

1. LNA SOLUTIONS, 100 STRADTMAN STREET, BUFFALO, NY 14206.
2. APPROVED EQUAL.

DESIGN REFERENCE:

1. AASHTO-GUIDELINES FOR GEOMETRIC DESIGN OF VERY LOW-VOLUME LOCAL ROADS (ADT ≤400)

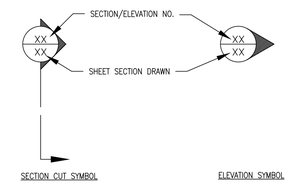

LEGEND	EXISTING	PROPOSED
BUILDING		N/A
CONTOUR		
TREE LINE		N/A
GUARDRAIL	N/A	
PROPERTY LINE		N/A
CONCRETE	N/A	
GRAVEL	N/A	
INSTALL ASPHALT TOP COURSE	N/A	
FULL DEPTH ASPHALT	N/A	
EDGE OF RACEWAY		N/A
SAWCUT	N/A	SAW SAW
DEMOLITION	N/A	
FLOOD MITIGATION AREA		N/A
TEMPORARY ACCESS ROAD	N/A	
BOLLARD	N/A	
DRAINAGE PIPE	N/A	

IDENTIFIERS

RM / C — REMOVE BY CONTRACTOR

DND — DO NOT DISTURB

ABBREVIATION SCHEDULE	
ABBREVIATION	DEFINITION
ADA	AMERICANS WITH DISABILITIES ACT
ALLOW.	ALLOWABLE
ALUM	ALUMINUM
BL	BASE LINE
BOTT	BOTTOM
BRG	BEARING
CAP	CAPACITY
CJ	CONTROL JOINT
CL	CENTER LINE
CLR	CLEAR
CONC	CONCRETE
CORR	CORRUGATED
CSJ	CONSTRUTION JOINT
DFM	DIVISION OF FACILITIES MANAGEMENT
DIAG	DIAGONAL
DL	DEAD LOAD
DNREC	DEPARTMENT OF NATURAL RESOURCES AND ENVIRONMENTAL CONTROL
DOL	DEPARTMENT OF LABOR
DOT	DEPARTMENT OF TRANSPORTATION
E.F.	EACH FACE
EL., ELEV	ELEVATION
EQU.	EQUAL
EX., EXIST.	EXISTING
F.F.	FAR FACE
F'c	COMPRESSIVE STRENGH OF CONCRETE
FIN. FL.	FINISHED FLOOR
FIN. GR.	FINISHED GRADE
FND	FOUNDATION
FTG	FOOTING
Fy	YIELD STRENGTH OF STEEL
GABC	GRADED AGGREGATE BASE COURSE
GALV	GALVANIZED
HORIZ	HORIZONTAL
JT	JOINT
LL	LIVE LOAD
LOC	LIMIT OF CONSTRUCTION
LOD	LIMIT OF DISTURBANCE
LRFD	LOAD RESISTANCE FACTORED DESIGN
MHW	MEAN HIGH WATER
MTL	METAL
N.F.	NEAR FACE
O.C.	ON CENTER
OHW	ORDINARY HIGH WATER
OPP	OPPOSITE
P.L.	PROPERTY LINE
PL	PLATE
PSI	POUNDS PER SQUARE INCH
PT	PRESSURE TREATED
REBAR	REINFORCING BAR
ROW, R/W, RIW	RIGHT OF WAY
SF	SILT FENCE
SIM	SIMILAR
SS	STAINLESS STEEL
STA	STATION
STL	STEEL
STR	STRAIGHT
T&B	TOP AND BOTTOM
TYP	TYPICAL
UHMW	ULTRA HIGH MOLECULAR WEIGHT
UNIF	UNIFORM
UNO	UNLESS NOTED OTHERWISE
VERT	VERTICAL
WSE	WATER SURFACE ELEVATION
WWF	WELDED WIRE FABRIC
NOTE: ABBREVIATIONS MAY OR MAY NOT INCLUDE A PERIOD	

REVISIONS:

DATE:	DESCRIPTION:	BY:

AUBURN VALLEY STATE PARK
FARM LANE BRIDGE PHASE 2

PROJECT NOTES & LEGEND

SEAL:

WALTER J. HOEY II · REGISTERED · NO. 11204 · DELAWARE · PROFESSIONAL ENGINEER

8/19/2021

CIVIL ENGINEER:

CENTURY ENGINEERING
CONSULTING ENGINEERS, SURVEYORS
550 S. BAY ROAD
DOVER, DELAWARE 19901

CONTRACT NO.: 175013.09

DELAWARE STATE PARKS — YOUR OUTDOOR ADVENTURE STARTS HERE

DESIGNED BY: WJH

DRAWN BY: ZTP/DLD

CHECKED BY: AES

DATE: AUGUST 2021

SCALE: N.T.S.

SHEET NO.: C301

CONTRACT NO.: NAT21021-AVFARMLANE

G:\Projects\175013.09 (DNREC 2017 Engineering DES)\175013.09 (Farm Lane Bridge)\CADD FILES 2\SHEETS\CONSTRUCTION PLANS\C301 PROJECT NOTES.dwg, 8/20/2021 9:58 AM

TRAVERSE POINT LAYOUT				
POINT NO.	DESCRIPTION	NORTHING	EASTING	ELEVATION
1	TP1 – REBAR	658564.0514	581927.4642	189.63
3	TP2	658327.0846	582014.1493	196.20
5	TP4	658350.7394	581774.1149	182.02
6	TP7	658310.6544	581969.6428	188.58
20	TP20 DRILL HOLE IN CONC PAD	658314.5931	582023.7317	195.25
21	TP21	658361.8546	582093.8933	200.01
22	TP22	658416.9054	582020.2772	205.32
24	TP24	658369.0487	582071.9481	198.18

GENERAL NOTE:
1. SEE SHEET C306 FOR ALIGNMENT LAYOUT.

0' 40' 80' 120'
SCALE: 1" = 40'

REVISIONS:
DATE: DESCRIPTION: BY:

AUBURN VALLEY STATE PARK
FARM LANE BRIDGE PHASE 2

SITE CONTROL PLAN

SEAL:
WALTER J. HOEY III
REGISTERED
NO. 11204
DELAWARE
PROFESSIONAL ENGINEER
8/19/2021

CIVIL ENGINEER:
CENTURY ENGINEERING
CONSULTING ENGINEERS, SURVEYORS
550 S. BAY ROAD
DOVER, DELAWARE 19901

CONTRACT NO.: 175013.09

DELAWARE STATE PARKS
YOUR OUTDOOR ADVENTURE STARTS HERE

DESIGNED BY: WJH
DRAWN BY: ZTP/DLD
CHECKED BY: AES
DATE: AUGUST 2021
SCALE: 1" = 40'
SHEET NO.: C302
CONTRACT NO.: NAT21021-AVFARMLANE

G:\Projects\175013.00 (DNREC 2017 Engineering DE)\175013.09 (Farm Lane Bridge)\CADD FILES Z\SHEETS\CONSTRUCTION PLANS\C302 SITE CONTROL PLAN.dwg, 8/20/2021 9:58 AM

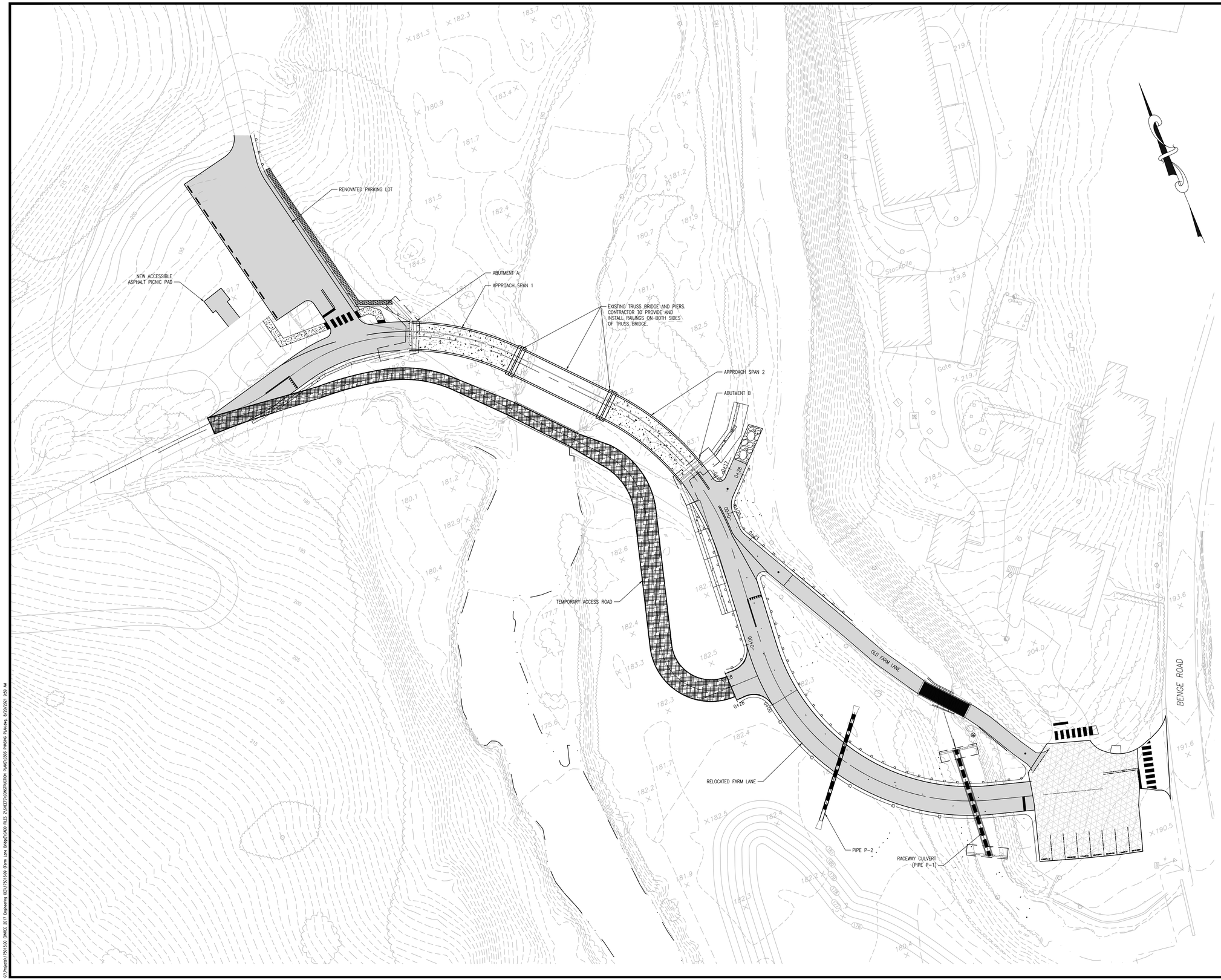

PHASING PLAN

THIS PHASING PLAN IS A SUGGESTED ORDER OF OPERATION FOR THE CONSTRUCTION OF THE BRIDGE APPROACHES AND REALIGNED FARM LANE. THE CONTRACTOR SHALL BE RESPONSIBLE FOR DEVELOPING AND SUBMITTING A PHASING PLAN TO THE OWNER THAT INCORPORATES ALL ASPECTS OF THE CONSTRUCTION AND INCLUDES THE REQUIREMENT TO PROVIDE UNINTERRUPTED VEHICULAR ACCESS TO THE RESIDENTS AT THE END OF FARM LANE. RESIDENT ACCESS MUST INCLUDE DELIVERY AND EMERGENCY VEHICLES.

SPECIAL ATTENTION SHALL BE GIVEN TO THE AREA AT WING WALL II, BETWEEN STATIONS 101+00 AND 102+50, WHERE OLD FARM LANE CONNECTS TO THE NEW ALIGNMENT.

THE CONTRACTOR SHALL APPOINT A CONTACT PERSON OR PERSONS THAT WILL PROVIDE 48 HOURS NOTICE TO THE OWNER OF ANY IMPENDING ROAD CLOSURES THAT MAY AFFECT THE RESIDENTS. THE CONTRACTOR SHALL PROVIDE A PHONE NUMBER FOR THE CONTACT PERSON IN CASE OF EMERGENCIES. HOWEVER, THE CONTRACTOR SHALL BE AWARE THAT CELL SERVICE AT THE CONSTRUCTION SITE IS NOT RELIABLE.

1. PLACE ALL SEDIMENT AND EROSION CONTROLS AS REQUIRED.

2. INSTALL SANDBAG FLOW BLOCK IN RACEWAY AT BOTH ENDS OF PROPOSED CULVERT.

3.
   - INSTALL TEMPORARY SHEET PILES FOR ABUTMENT A AND CONSTRUCT ABUTMENT A.
   - CONSTRUCT RACEWAY CULVERT AND HEADWALLS.
   - CONSTRUCT APPROACH #2 FILL, GRADED AGGREGATE BASE COURSE, AND INITIAL COURSE OF ASPHALT FROM STATION 106+00 TO STATION 108+50.
   - MAINTAIN TRAFFIC ON OLD FARM LANE ROAD.
   - REMOVE RACEWAY SANDBAG BLOCKS TO ALLOW FLOW.

4.
   - CONSTRUCT TEMPORARY GRADED AGGREGATE BASE COURSE ACCESS ROAD, (SEE DETAIL X/C305).
   - RELOCATE TRAFFIC TO APPROACH #2 AND TEMPORARY ACCESS ROAD.
   - CONSTRUCT ABUTMENT B.
   - PLACE FILL FOR APPROACH AT ABUTMENT B.

5.
   - CONSTRUCT APPROACH SPANS 1 AND 2.
   - MAINTAIN TRAFFIC ON TEMPORARY ACCESS ROAD.

6. PLACE FILL FOR NEW PARKING LOT.

6. PAVE APPROACHES AND PARKING LOT AND OPEN NEW ALIGNMENT OF RELOCATED FARM LANE TO TRAFFIC.

7. REMOVE TEMPORARY ACCESS ROAD, BACKFILL, RE-GRADE, AND RESTORE WITH 6-INCHES TOPSOIL AND SEED.

8. REMOVE EROSION AND SEDIMENT CONTROLS WITH APPROVAL OF THE ENGINEER AND PROPER AGENCIES.

9. THE TEMPORARY ROAD MUST REMAIN TO SERVE AS A FUTURE MAINTENANCE ROAD FOR THE BRIDGE, AND THE TEMPORARY STONE ROAD MUST BE TOPSOILED AND SEEDED POST THE COMPLETION OF THE PROJECT.

NOTES:

1. THE EXISTING PIERS SUPPORTING THE SPAN 2 TRUSS WERE CONSTRUCTED UNDER PHASE 1.

2. REFER TO SHEET ES501 FOR ADDITIONAL INFORMATION

REVISIONS:

DATE:	DESCRIPTION:	BY:

AUBURN VALLEY STATE PARK
FARM LANE BRIDGE PHASE 2

PHASING PLAN

SEAL:

WALTER J. HOEY, III
REGISTERED
NO. 11204
DELAWARE
PROFESSIONAL ENGINEER

8/19/2021

CIVIL ENGINEER:

CENTURY ENGINEERING
CONSULTING ENGINEERS, SURVEYORS
550 S. BAY ROAD
DOVER, DELAWARE 19901

CONTRACT NO.: 175013.09

DELAWARE STATE PARKS
YOUR OUTDOOR ADVENTURE STARTS HERE

DESIGNED BY: WJH

DRAWN BY: ZTP/DLD

CHECKED BY: AES

DATE: AUGUST 2021

SCALE: 1" = 30'

SHEET NO.: C303

CONTRACT NO.: NAT21021-AVFARMLANE

G:\Projects\175013.00 (DNREC 2017 Engineering ACE)\175013.09 (Farm Lane Bridge)\CADD FILES 2\SHEETS\CONSTRUCTION PLANS\C303 PHASING PLAN.dwg, 8/20/2021 9:59 AM

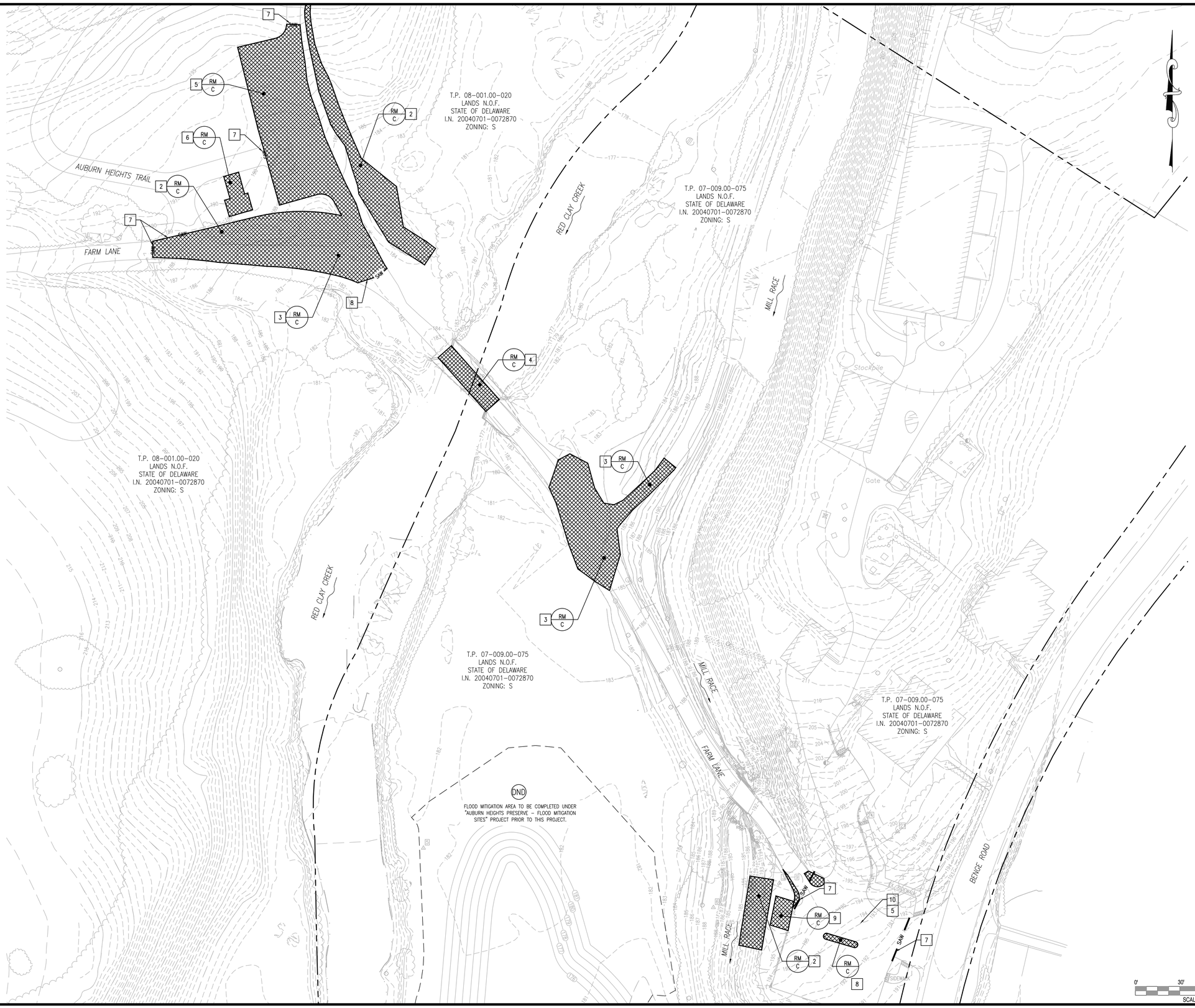

GENERAL NOTES:

1. EXISTING TOPOGRAPHY PROVIDED BY DNREC.
2. REMOVE EXISTING VEGETATION.
3. REMOVE EXISTING ASPHALT AND GRAVEL ROAD.
4. REMOVE EXISTING FARM LANE BRIDGE, DECK, GIRDERS AND CENTER PIER. ABUTMENTS ARE TO REMAIN IN PLACE.
5. REMOVE EXISTING PARKING BUMPERS AND STOCKPILE ON-SITE FOR REUSE.
6. REMOVE EXISTING PICNIC AREA. (SEE SHEET C307 FOR NEW LOCATION).
7. SAWCUT EXISTING PAVEMENT. (SEE PAVEMENT TIE-IN DETAIL)
8. REMOVE EXISTING CONCRETE ISLAND.
9. REMOVE EXISTING TIMBER DUMPSTER CORALE AND CONCRETE PAD.
10. OVERLAY EXISTING ASPHALT PARKING LOT WITH TACK COAT AND SUPERPAVE, TYPE C AT COMPLETION OF CONSTRUCTION. RESTORE PARKING LINES AND CONCRETE STOP BLOCKS AS SHOWN ON THESE PLANS.

REVISIONS:

DATE:	DESCRIPTION:	BY:

AUBURN VALLEY STATE PARK
FARM LANE BRIDGE PHASE 2

DEMOLITION PLAN

SEAL:

WALTER J. HOEY III
REGISTERED
NO. 11204
DELAWARE
PROFESSIONAL ENGINEER

8/19/2021

CIVIL ENGINEER:

CENTURY ENGINEERING
CONSULTING ENGINEERS, SURVEYORS
550 S. BAY ROAD
DOVER, DELAWARE 19901

CONTRACT NO.: 175013.09

DELAWARE STATE PARKS
YOUR OUTDOOR ADVENTURE STARTS HERE

DESIGNED BY: WJH

DRAWN BY: ZTP/DLD

CHECKED BY: AES

DATE: AUGUST 2021

SCALE: 1" = 30'

SHEET NO.: C304

CONTRACT NO.: NAT21021-AVFARMLANE

G:\Projects\175013.00 (DNREC 2017 Engineering DET)\175013.09 (Farm Lane Bridge)\CADD FILES 2\SHEETS\CONSTRUCTION PLANS\C304 DEMOLITION PLAN.dwg, 8/20/2021 9:59 AM

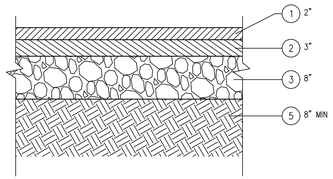

* BORROW, TYPE C, SHALL BE UTILIZED FOR ALL PIPE TRENCH BACK FILL

4 C305 TYPICAL SECTION - FARM LANE ROAD
SCALE: N.T.S.

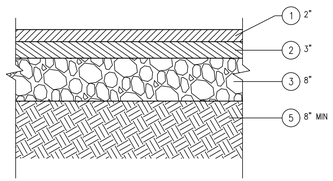

* BORROW, TYPE C, SHALL BE UTILIZED FOR ALL PIPE TRENCH BACK FILL

5 C305 TYPICAL SECTION - PARKING LOT
SCALE: N.T.S.

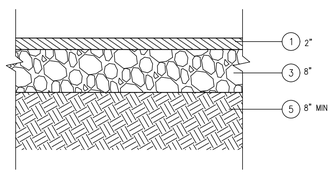

* BORROW, TYPE C, SHALL BE UTILIZED FOR ALL PIPE TRENCH BACK FILL

6 C305 TYPICAL SECTION - RACEWAY TRAIL
STA. 200+-00 TO 202+59±
SCALE: N.T.S.

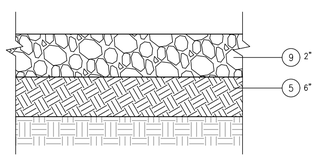

* BORROW, TYPE C, SHALL BE UTILIZED FOR ALL PIPE TRENCH BACK FILL

7 C305 TYPICAL SECTION - TROLLEY TRAIL
STA. 300+36 TO 300+62 ±
SCALE: N.T.S.

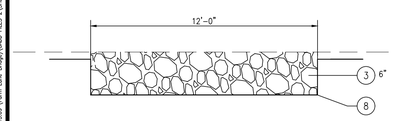

8 C305 TYPICAL SECTION - TEMPORARY ACCESS ROAD
SCALE: N.T.S.

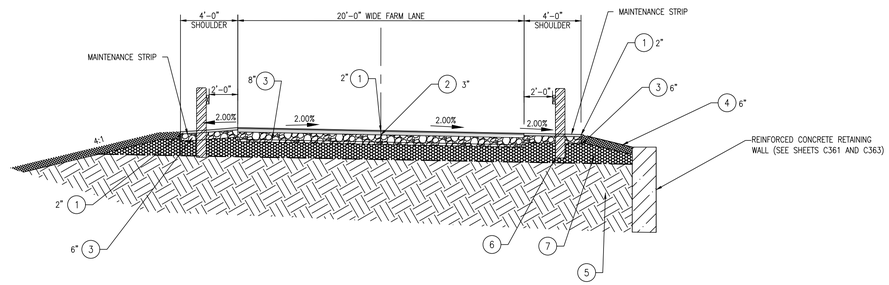

1 C305 TYPICAL SECTION - FARM LANE
SCALE: 1" = 5' STA. 104+70.36 TO STA. 105+67.07

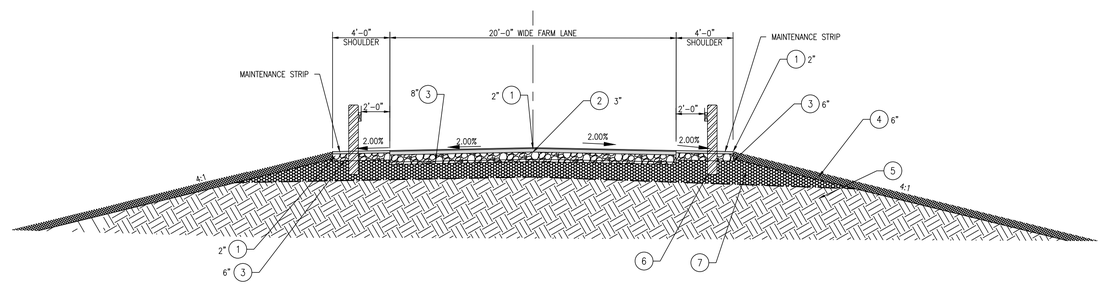

2 C305 TYPICAL SECTION - FARM LANE
SCALE: 1" = 5' STA. 105+67.07 TO STA. 106+67.07

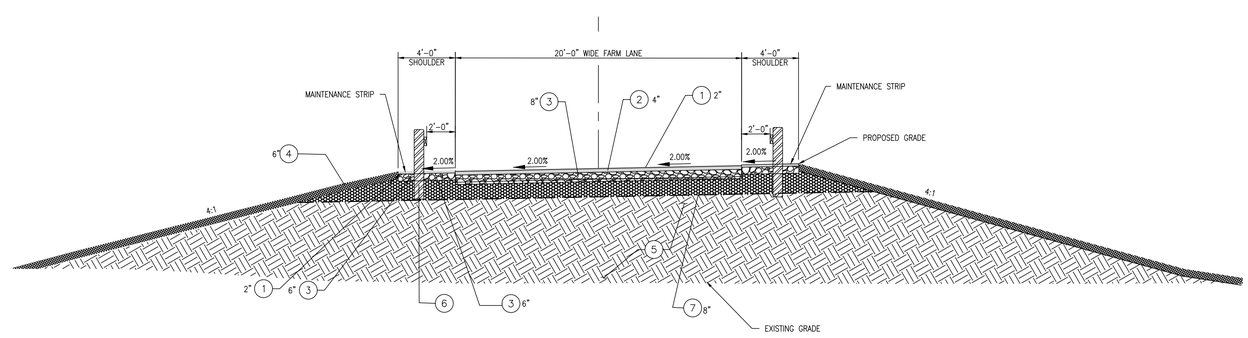

SN = 2.44

3 C305 TYPICAL SECTION - FARM LANE
SCALE: 1" = 5' STA. 106+67.07 TO STA. 107+85.86

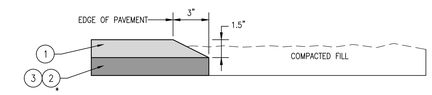

NOTE:
* REFER TO 4 THRU 8 FOR MATERIAL TYPE AND THICKNESS.

7 C305 ASPHALT SAFETY EDGE
SCALE: NONE

LEGEND

1. SUPERPAVE TYPE C, PG 64-22 (CARBONATE STONE), (ITEM NO. 401005)
2. SUPERPAVE TYPE B, PG 64-22, (ITEM NO. 401014)
3. GRADED AGGREGATE BASE COURSE, TYPE B, (ITEM NO. 301003)
4. TOPSOIL (ITEM NO. 908004)
5. BORROW, TYPE F, MAXIMUM 8" LIFTS, COMPACTION: 95% OF MAXIMUM DENSITY PER MODIFIED PROCTOR TEST (ITEM NO. 209006)
6. TIMBER GUARDRAIL (SEE DETAIL SHEET C112)
7. BORROW, TYPE A, MAXIMUM 8" LIFTS, COMPACTION 95% OF MAXIMUM DRY DENSITY PER MODIFIED PROCOTOR TEST (ITEM NO. 209007)
8. GEOTEXTILE FABRIC SEPERATION (ITEM NO. 708002)
9. DELAWARE STONE #10 (ITEM NO. 302004)

NOTE:

1. ALL AREAS TO RECEIVE TOPSOIL SHALL BE SEEDED AND MULCHED IN ACCORDANCE WITH DELDOT SECTION 908016 – PERMANENT GRASS SEEDING, SUBDIVISION.

0' 10' 20' 30'
SCALE: 1" = 10'

REVISIONS:

DATE:	DESCRIPTION:	BY:

AUBURN VALLEY STATE PARK
FARM LANE BRIDGE PHASE 2
TYPICAL SECTIONS

SEAL:
WALTER J. HOEC, III
REGISTERED
NO. 11204
DELAWARE
PROFESSIONAL ENGINEER
8/19/2021

CIVIL ENGINEER:
CENTURY ENGINEERING
CONSULTING ENGINEERS, SURVEYORS
550 S. BAY ROAD
DOVER, DELAWARE 19901

CONTRACT NO.: 175013.09

DELAWARE STATE PARKS
YOUR OUTDOOR ADVENTURE STARTS HERE

DESIGNED BY: WJH
DRAWN BY: ZTP/DLD
CHECKED BY: AES
DATE: AUGUST 2021
SCALE: AS SHOWN
SHEET NO.: C305
CONTRACT NO.: NAT21021-AVFARMLANE

G:\Projects\175013.00 (NREC 2017 Engineering RE)\175013.09 (Farm Lane Bridge)\CADD FILES 2\SHEETS\CONSTRUCTION PLANS\C305 TYPICAL SECTIONS.dwg, 8/20/2021 10:00 AM

FARM LANE ROAD					
LINE/CURVE #	RADIUS	ARC	DELTA	CHORD BEARING	CHORD DISTANCE
C57	120.00'	64.00'	030° 33' 25"	S88° 22' 35"E	64.00'
C58	169.00'	92.67'	031° 25' 03"	S57° 23' 21"E	92.67'
C59	169.00'	138.06'	046° 48' 22"	S18° 16' 38"E	138.06'
C60	91.00'	14.89'	009° 22' 41"	N81° 02' 03"E	14.89'
C61	150.00'	205.64'	078° 32' 55"	S34° 08' 54"E	205.64'
L83				N85° 43' 24"E	125.22'
L84				N76° 20' 42"E	25.69'
L85				S41° 41' 00"E	71.00'
L86				S05° 07' 33"W	69.44'
L87				S73° 25' 21"E	77.67'

FARM LANE ROAD LAYOUT			
POINT #	NORTHING	EASTING	STATION
1000	658749.0718	581498.8656	POB STA. 100+00.00
1001	658758.5596	581623.7264	PC STA. 101+25.22
1002	658849.3062	581616.9402	RADIUS: 91.00'
1003	658760.8783	581638.4229	PT STA. 101+40.12
1004	658766.9426	581663.3851	PC STA. 101+65.80
1005	658650.3344	581691.7139	RADIUS: 120.00'
1006	658765.1507	581726.6025	PCC STA. 102+29.80
1007	658603.4510	581677.4678	RADIUS: 169.00'
1008	658715.8315	581803.6883	PT STA. 103+22.47
1009	658662.8064	581850.9042	PC STA. 103+93.47
1010	658550.4259	581724.6836	RADIUS: 169.00'
1011	658535.3267	581893.0078	PT STA. 105+31.53
1012	658466.1677	581886.8040	PC STA. 106+00.97
1013	658452.7661	582036.2041	RADIUS: 150.00
1014	658309.0008	581993.4076	PT STA. 108+06.61
1015	658286.8415	582067.8466	POE STA. 108+84.28

PARKING LOT ACCESS					
LINE/CURVE #	RADIUS	ARC	DELTA	CHORD BEARING	CHORD DISTANCE
C62	25.00'	8.17'	018° 43' 25"	N02° 27' 08"W	8.17'
C63	55.00'	19.92'	020° 45' 07"	N01° 26' 17"W	19.92'
L88				N06° 54' 34"E	14.98'
L89				N11° 48' 51"W	104.68'
L90				N08° 56' 16"E	16.20'

PARKING LOT ACCESS LAYOUT			
POINT #	NORTHING	EASTING	STATION
2000	658769.4628	581706.1502	POB STA. 50+00.00
2001	658784.3337	581707.9523	PC STA. 50+04.98
2002	658787.3412	581683.1339	RADIUS: 25.00'
2003	658792.4596	581707.6043	PT STA. 50+13.15
2004	658894.9235	581686.1723	PC STA. 51+17.83
2005	658906.1840	581740.0072	RADIUS: 55.00'
2006	658914.7289	581685.6750	PT STA. 51+37.75
2007	658930.7319	581688.1919	POE 51+53.95

RACEWAY TRAIL					
LINE/CURVE #	RADIUS	ARC	DELTA	CHORD BEARING	CHORD DISTANCE
L96				S30° 02' 35"E	45.72'
L97				S34° 01' 18"E	136.57'
L98				S27° 47' 37"E	110.79'

RACEWAY TRAIL LAYOUT			
POINT #	NORTHING	EASTING	STATION
3000	658555.2555	581893.6146	POB STA. 200+00.00
3001	658457.2432	581945.2764	STA. 201+10.79
3002	658417.6689	581968.1642	STA. 201+56.51
3003	658333.1098	582026.7193	POE STA. 202+59.36

TROLLEY TRAIL					
LINE/CURVE #	RADIUS	ARC	DELTA	CHORD BEARING	CHORD DISTANCE
C64	10.00'	6.22'	035° 38' 39"	N63° 45' 13"E	6.22'
L91				N81° 34' 32"E	11.58'
L92				N45° 55' 54"E	44.30'
L93				N33° 37' 11"E	16.97'
L94				N27° 07' 16"E	29.82'
L95				N17° 26' 13"E	29.42'

TROLLEY TRAIL LAYOUT			
POINT #	NORTHING	EASTING	STATION
4000	658575.1849	581891.8602	POB STA. 300+00.00
4001	658576.8808	581903.3107	PC STA. 300+11.58
4002	658586.7729	581901.8457	RADIUS: 10.00'
4003	658579.5878	581908.8009	PT STA. 300+17.80
4004	658610.4018	581940.6336	STA. 300+62.10
4005	658624.5341	581950.0300	STA. 300+79.07
4006	658651.0780	581963.6255	STA. 301+08.89
4007	658679.1457	581972.4413	POE STA. 301+38.31

PIPE 1					
LINE/CURVE #	RADIUS	ARC	DELTA	CHORD BEARING	CHORD DISTANCE
L99				S04° 39' 01"W	105.25'
L100				S04° 49' 35"E	22.71'
L101				S22° 55' 56"E	43.47'

PIPE 1 LAYOUT			
POINT #	NORTHING	EASTING	STATION
5000	658377.8799	581986.2822	POB STA. 500+00.00
5001	658272.9793	581977.7493	STA. 501+05.25
5002	658250.3528	581979.6598	STA. 501+27.95
5003	658210.3156	581996.5987	POE STA. 501+71.43

PIPE 2					
LINE/CURVE #	RADIUS	ARC	DELTA	CHORD BEARING	CHORD DISTANCE
L102				S39° 42' 14"W	115.13'

PIPE 2 LAYOUT			
POINT #	NORTHING	EASTING	STATION
6000	658419.8119	581944.3521	POB STA. 700+00
6001	658331.2382	581870.8068	POE STA. 701+15.13

DRIVEWAY					
LINE/CURVE #	RADIUS	ARC	DELTA	CHORD BEARING	CHORD DISTANCE
L103				N90° 00' 00"W	43.46'

DRIVEWAY LAYOUT			
POINT #	NORTHING	EASTING	STATION
7000	658449.9031	581876.2332	POB STA. 600+00
7001	658449.9031	581832.7678	POE STA. 600+43.46

0' 40' 80' 120'
SCALE: 1" = 40'

REVISIONS:
DATE: DESCRIPTION: BY:

AUBURN VALLEY STATE PARK
FARM LANE BRIDGE PHASE 2
HORIZONTAL ALIGNMENT

SEAL:
WALTER J. HOEY, III
REGISTERED
NO. 11204
DELAWARE
PROFESSIONAL ENGINEER
8/19/2021

CIVIL ENGINEER:
CENTURY ENGINEERING
CONSULTING ENGINEERS, SURVEYORS
550 S. BAY ROAD
DOVER, DELAWARE 19901

CONTRACT NO.: 175013.09

DELAWARE STATE PARKS
YOUR OUTDOOR ADVENTURE STARTS HERE

DESIGNED BY: WJH
DRAWN BY: ZTP/DLD
CHECKED BY: AES
DATE: AUGUST 2021
SCALE: 1" = 40'
SHEET NO.: C306
CONTRACT NO.: NAT21021-AVFARMLANE

G:\Projects\175013.00 [DAMIE. 2017 Engineering 0(E)\175013.09 (Farm Lane Bridge)\CADD FILES 2\SHEETS\CONSTRUCTION PLANS\C306 HORIZONTAL ALIGNMENT.dwg, 8/20/2021 10:03 AM

POINT TABLE

POINT NO.	ELEVATION	NORTHING	EASTING
1000	192.49	658785.1392	581693.6664
1001	192.56	658790.1710	581692.7584
1002	193.02	658786.3260	581656.7835
1003	193.04	658791.1970	581660.8729
1004	193.75	658807.6020	581652.3333
1005	193.83	658808.9920	581657.1508
1006	193.76	658816.0666	581638.3832
1007	193.61	658813.2945	581628.7751
1008	193.82	658826.7458	581624.8941
1009	193.86	658826.0528	581622.4921
1010	193.93	658835.6609	581619.7200
1011	194.16	658839.8191	581634.1321
1012	194.01	658830.2110	581636.9042
1013	193.97	658829.5179	581634.5022
1014	192.40	658780.3013	581688.7818
1015	192.54	658785.3000	581688.6690
1016	192.50	658786.3237	581693.5631
1017	192.95	658805.2974	581689.5944
1018	192.99	658804.3977	581684.7815
1019	193.04	658809.1678	581683.6767
1020	193.79	658804.4589	581661.1639
1021	200.44	658916.0440	581637.8240
1022	201.11	658923.0015	581671.0871
1023	203.09	658937.6838	581668.0160
1024	202.45	658934.3696	581682.6453
1025	201.92	658929.9445	581693.1295
1026	200.25	658916.8750	581691.1620
1027	194.29	658906.1840	581740.0072
1028	197.36	658895.9472	581691.0664
1029	192.56	658784.4726	581714.3831
1030	192.64	658789.4726	581713.3373
1031	192.77	658789.4726	581723.6175
1032	192.76	658784.4726	581721.8682
1033	193.01	658783.8278	581730.6972
1034	192.99	658781.4196	581725.6972
1035	192.92	658775.8140	581725.6972
1036	193.01	658774.3534	581730.6972
1037	192.86	658776.7924	581721.8529
1038	192.84	658786.5200	581724.1713
1039	193.31	658801.3515	581630.6692
1040	191.59	658807.5740	581608.9480

GENERAL NOTES:

1. NEW APPROACH SPAN 1.
2. NEW BRIDGE ABUTMENT A AND WINGWALLS.
3. RELOCATED PICNIC AREA AS SHOWN.
4. NEW GABION RETAINING WALL.
5. NEW CAST-IN-PLACE CONCRETE WINGWALL EXTENSION II (SEE SHEET C361 FOR DETAILS)

NOTES:

1. SEE SHEETS C314 AND C315 FOR SIGNING AND STRIPING PLANS.
2. SEE TT100 FOR TURNING TEMPLATE PLAN.

REVISIONS:

DATE:	DESCRIPTION:	BY:

AUBURN VALLEY STATE PARK
FARM LANE BRIDGE PHASE 2

PARTIAL SITE PLAN - 1

SEAL: WALTER J. HOEY III REGISTERED NO. 11204 DELAWARE PROFESSIONAL ENGINEER
8/19/2021

CIVIL ENGINEER:
CENTURY ENGINEERING
CONSULTING ENGINEERS, SURVEYORS
550 S. BAY ROAD
DOVER, DELAWARE 19901

CONTRACT NO.: 175013.09

DELAWARE STATE PARKS
YOUR OUTDOOR ADVENTURE STARTS HERE

DESIGNED BY: WJH
DRAWN BY: ZTP/DLD
CHECKED BY: AES
DATE: AUGUST 2021
SCALE: 1" = 10'
SHEET NO.: C307
CONTRACT NO.: NAT21021-AVFARMLANE

G:\Projects\175013.00 (DNREC 2017 Engineering REV)\175013.09 (Farm Lane Bridge)\CADD FILES 2\SHEETS\CONSTRUCTION PLANS\C307 SPE PLAN.dwg, 8/20/2021 10:04 AM

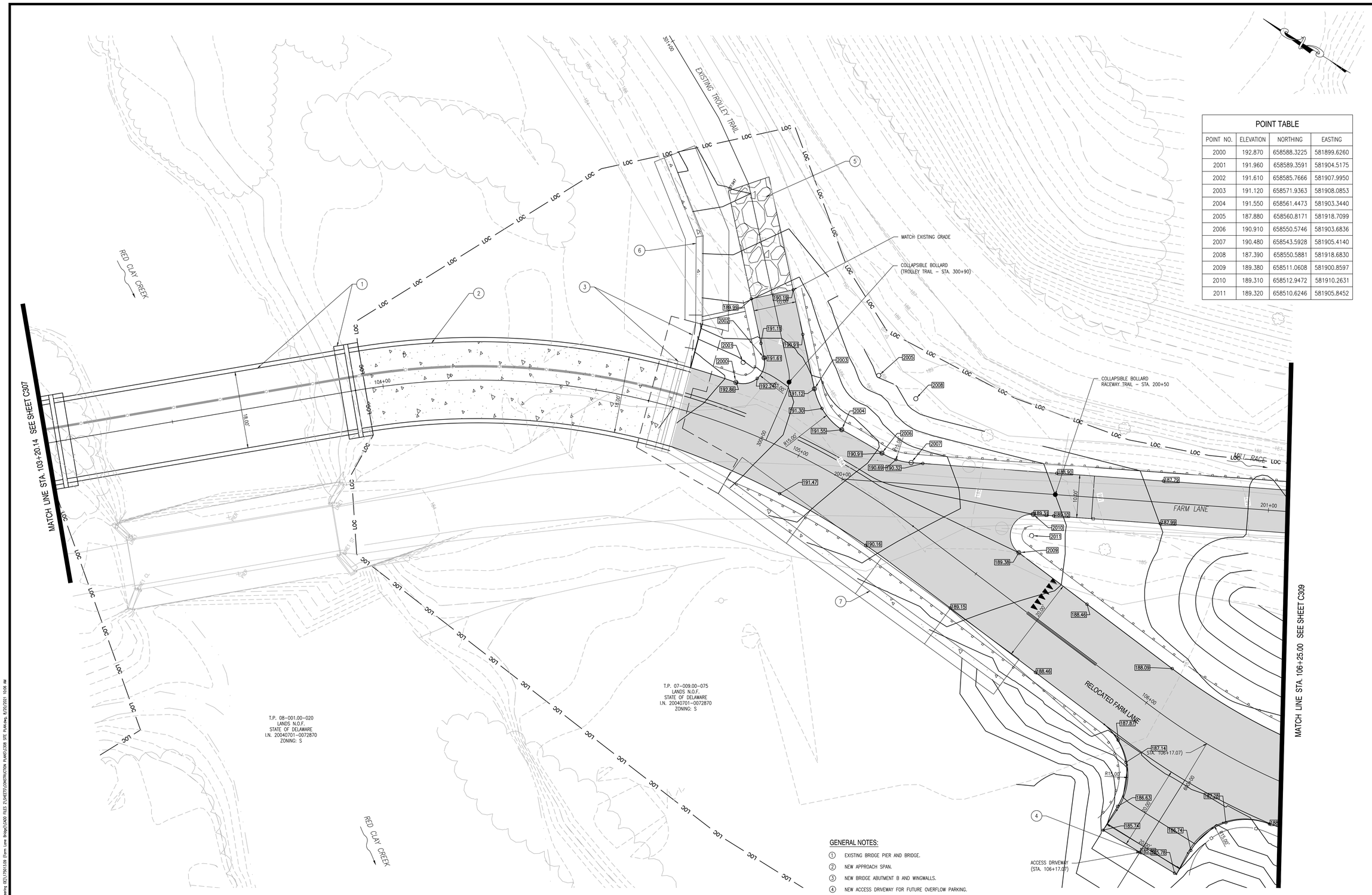

POINT TABLE			
POINT NO.	ELEVATION	NORTHING	EASTING
2000	192.870	658588.3225	581899.6260
2001	191.960	658589.3591	581904.5175
2002	191.610	658585.7666	581907.9950
2003	191.120	658571.9363	581908.0853
2004	191.550	658561.4473	581903.3440
2005	187.880	658560.8171	581918.7099
2006	190.910	658550.5746	581903.6836
2007	190.480	658543.5928	581905.4140
2008	187.390	658550.5881	581918.6830
2009	189.380	658511.0608	581900.8597
2010	189.310	658512.9472	581910.2631
2011	189.320	658510.6246	581905.8452

GENERAL NOTES:

1. EXISTING BRIDGE PIER AND BRIDGE.
2. NEW APPROACH SPAN.
3. NEW BRIDGE ABUTMENT B AND WINGWALLS.
4. NEW ACCESS DRIVEWAY FOR FUTURE OVERFLOW PARKING.
5. NEW GABC 10' WIDE CONNECTION TO EXISTING RACEWAY TRAIL.
6. NEW REINFORCED CONCRETE RETAINING WALL EXTENSION III
7. REINFORCED CONCRETE RETAINING WALL EXTENSION IV.

NOTES:

1. SEE SHEETS C314 AND C315 FOR SIGNING AND STRIPING PLANS.
2. SEE T1101 FOR TURNING TEMPLATE PLAN.

REVISIONS:

DATE:	DESCRIPTION:	BY:

AUBURN VALLEY STATE PARK
FARM LANE BRIDGE PHASE 2

PARTIAL SITE PLAN - 2

SEAL:

WALTER J. HOEY III
REGISTERED PROFESSIONAL ENGINEER
NO. 11204
DELAWARE
8/19/2021

CIVIL ENGINEER:

CENTURY ENGINEERING
CONSULTING ENGINEERS, SURVEYORS
550 S. BAY ROAD
DOVER, DELAWARE 19901

CONTRACT NO.: 175013.09

DELAWARE STATE PARKS
YOUR OUTDOOR ADVENTURE STARTS HERE

DESIGNED BY: WJH

DRAWN BY: ZTP/DLD

CHECKED BY: AES

DATE: AUGUST 2021

SCALE: 1" = 10'

SHEET NO.: C308

CONTRACT NO.: NAT21021-AVFARMLANE

G:\Projects\175013.00 (DNREC 2017 Engineering IQC)\175013.09 (Farm Lane Bridge)\CADD FILES Z\SHEETS\CONSTRUCTION PLANS\C308 SITE PLAN.dwg, 8/20/2021 10:56 AM

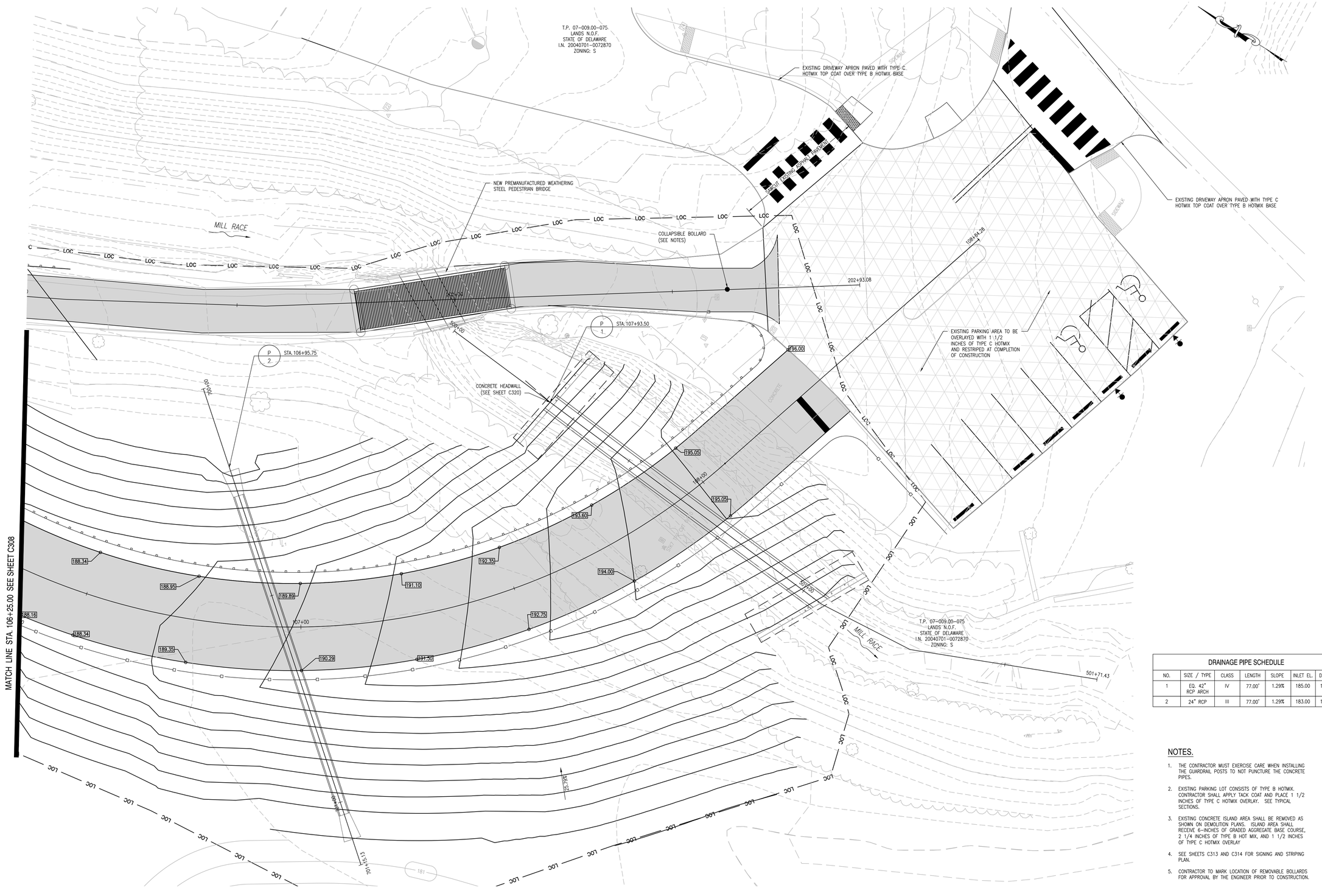

DRAINAGE PIPE SCHEDULE						
NO.	SIZE / TYPE	CLASS	LENGTH	SLOPE	INLET EL.	DIS. EL.
1	EQ. 42" RCP ARCH	IV	77.00'	1.29%	185.00	184.00
2	24" RCP	III	77.00'	1.29%	183.00	182.00

NOTES.

1. THE CONTRACTOR MUST EXERCISE CARE WHEN INSTALLING THE GUARDRAIL POSTS TO NOT PUNCTURE THE CONCRETE PIPES.
2. EXISTING PARKING LOT CONSISTS OF TYPE B HOTMIX. CONTRACTOR SHALL APPLY TACK COAT AND PLACE 1 1/2 INCHES OF TYPE C HOTMIX OVERLAY. SEE TYPICAL SECTIONS.
3. EXISTING CONCRETE ISLAND AREA SHALL BE REMOVED AS SHOWN ON DEMOLITION PLANS. ISLAND AREA SHALL RECEIVE 6-INCHES OF GRADED AGGREGATE BASE COURSE, 2 1/4 INCHES OF TYPE B HOT MIX, AND 1 1/2 INCHES OF TYPE C HOTMIX OVERLAY
4. SEE SHEETS C313 AND C314 FOR SIGNING AND STRIPING PLAN.
5. CONTRACTOR TO MARK LOCATION OF REMOVABLE BOLLARDS FOR APPROVAL BY THE ENGINEER PRIOR TO CONSTRUCTION.

0' 10' 20' 30'
SCALE: 1" = 10'

REVISIONS:

DATE:	DESCRIPTION:	BY:

AUBURN VALLEY STATE PARK FARM LANE BRIDGE PHASE 2

PARTIAL SITE PLAN - 3

SEAL:
WALTER J. HOEY, III
REGISTERED
NO. 11204
DELAWARE
PROFESSIONAL ENGINEER
8/19/2021

CIVIL ENGINEER:
CENTURY ENGINEERING
CONSULTING ENGINEERS, SURVEYORS
550 S. BAY ROAD
DOVER, DELAWARE 19901

CONTRACT NO.: 175013.09

DELAWARE STATE PARKS
YOUR OUTDOOR ADVENTURE STARTS HERE

DESIGNED BY: WJH

DRAWN BY: ZTP/DLD

CHECKED BY: AES

DATE: AUGUST 2021

SCALE: 1" = 10'

SHEET NO.: C309

CONTRACT NO.: NAT21021-AVFARMLANE

G:\Projects\175013.00 (DNREC 2017 Engineering OE)\175013.09 (Farm Lane Bridge)\CADD FILES 2\SHEETS\CONSTRUCTION PLANS\C309 SITE PLAN.dwg, 8/20/2021 10:07 AM

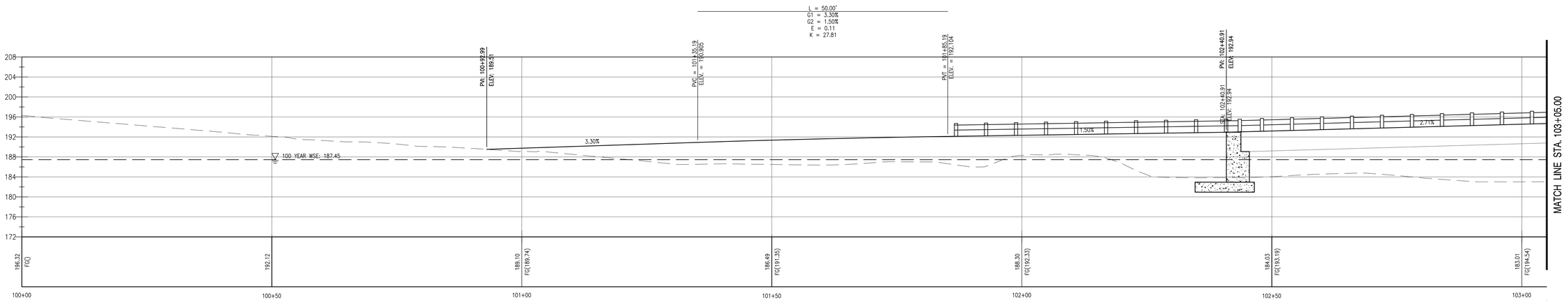

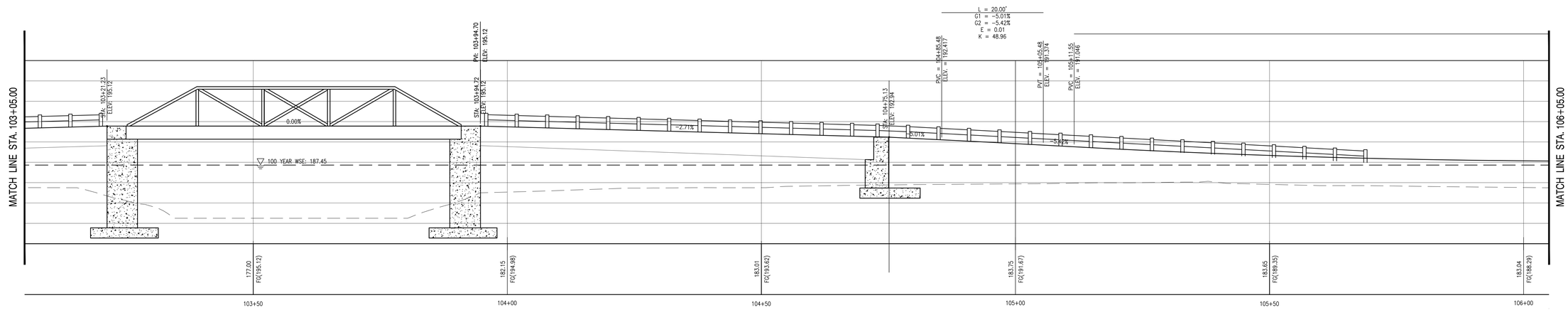

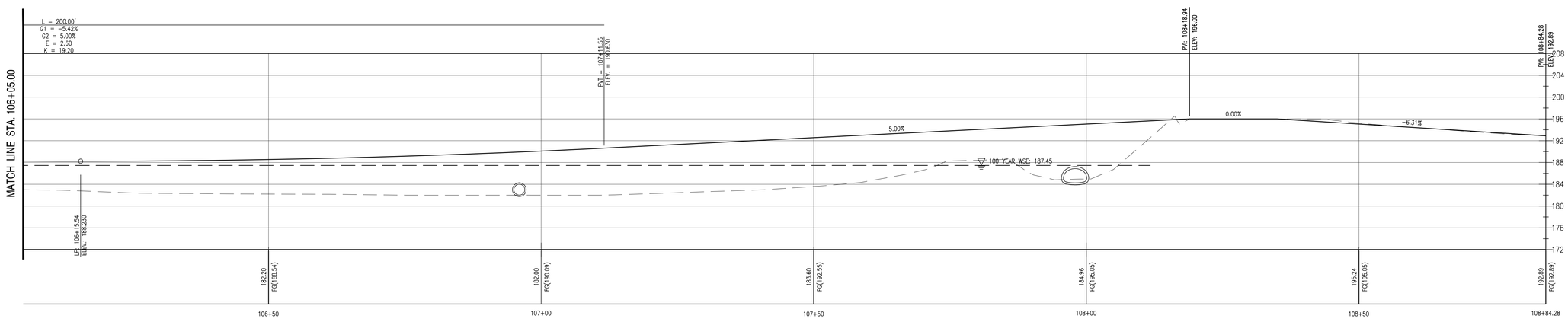

NOTE:
GUARDRAIL SHOWN FOR INFORMATIONAL PURPOSES ONLY. REFER TO PLAN SHEETS C307, C308, AND C309 FOR GUARDRAIL LAYOUT.

0' 10' 20' 30'
HORZ. SCALE: 1" = 10'

0' 10' 20' 30'
VERT. SCALE: 1" = 10'

REVISIONS:

DATE:	DESCRIPTION:	BY:

AUBURN VALLEY STATE PARK
FARM LANE BRIDGE PHASE 2

PROFILE - FARM LANE

SEAL:
WALTER J. HOEC, III
REGISTERED
NO. 11204
DELAWARE
PROFESSIONAL ENGINEER
8/19/2021

CIVIL ENGINEER:
CENTURY ENGINEERING
CONSULTING ENGINEERS, SURVEYORS
550 S. BAY ROAD
DOVER, DELAWARE 19901

CONTRACT NO.: 175013.09

DELAWARE STATE PARKS
YOUR OUTDOOR ADVENTURE STARTS HERE

DESIGNED BY: WJH
DRAWN BY: ZTP/DLD
CHECKED BY: AES
DATE: AUGUST 2021
SCALE: 1" = 10'
SHEET NO.: C310
CONTRACT NO.: NAT21021-AVFARMLANE

G:\Projects\175013.00 (DNREC 2017 Engineering RFQ)\175013.09 (Farm Lane Bridge)\CADD FILES 2\SHEETS\CONSTRUCTION PLANS\C310 PROFILE - FARM LANE.dwg, 8/20/2021 10:08 AM

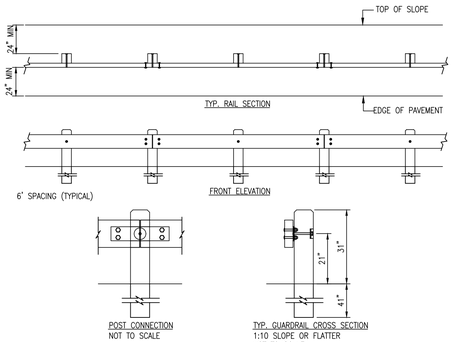

NOTES:
1. INSTALLATION TO BE COMPLETED IN ACCORDANCE WITH MANUFACTURER'S SPECIFICATIONS.
2. DO NOT SCALE DRAWINGS.
3. IF TOP OF SLOPE IS CLOSER THAN 24" INCREASE POST LENGTH TO 7'.
4. DRIVE POSTS OR AUGER, BACKFILL WITH NATIVE SOIL AND COMPACT EVERY 12".
5. ALL TIMBER #1 S4S SOUTHERN PINE, PRESSURE TREATED: AWPA-C14, WOOD FOR USE IN HWY. CONSTR.
6. TYP. POST: 8" X 8" X 6' – TYP. RAIL: 4" X 12" X 11' -11 1/2"
7. FASTENERS: ASTM A307; A242; F436 TYPE 3; A563 DH3.
8. TIMBARRIER® SPLICE PLATE & PLATE WASHER ASTM-A588.
9. UNDER EACH BOLT HEAD ON FACE OF RAIL INSTALL ONE 7/8" WASHER.
10. REFER TO DRAWINGS 651-003b OR 651-003c FOR TERMINAL DETAILS
11. CONTRACTORS NOTE: FOR PRODUCT AND COMPANY INFORMATION VISIT www.CADdetails.com/info REFERENCE NUMBER 651-003.

651-003

1 C311 TIMBARRIER - ROADWAY APPLICATION
SCALE: N.T.S.

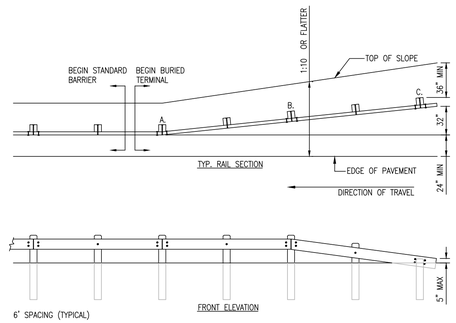

NOTES:
1. INSTALLATION TO BE COMPLETED IN ACCORDANCE WITH MANUFACTURER'S SPECIFICATIONS.
2. DO NOT SCALE DRAWINGS.
3. REFER TO DRAWING 651-003 FOR MATERIAL SPECIFICATIONS AND CONNECTION DETAIL.
4. A. SPICE PLATE T1 (PRE-BENT);
   B. SPLICE PLATE T2 (SLOTTED);
   C. ALL HARDWARE FOR THIS CONNECTION HOT DIP GALVANIZED
5. CONTRACTORS NOTE: FOR PRODUCT AND COMPANY INFORMATION VISIT www.CADdetails.com/info REFERENCE NUMBER 651-003b.

651-003b

2 C311 TIMBARRIER BURIED END
SCALE: N.T.S.

NOTES:
1. ALL STEEL SHALL BE HOT DIPPED GALVANIZED AFTER FABRICATION.
2. REMOVABLE BOLLARD SLEEVE IS MODEL #BPD-YL-3 1/2-66-S DISTRIBUTED BY BOLLARDS AND SLEEVES, LLC (1-800-914-4771).
3. BOLLARD TO BE PROVIDED BY THE CONTRACTOR PER DNREC PARKS SPECIFICATIONS.

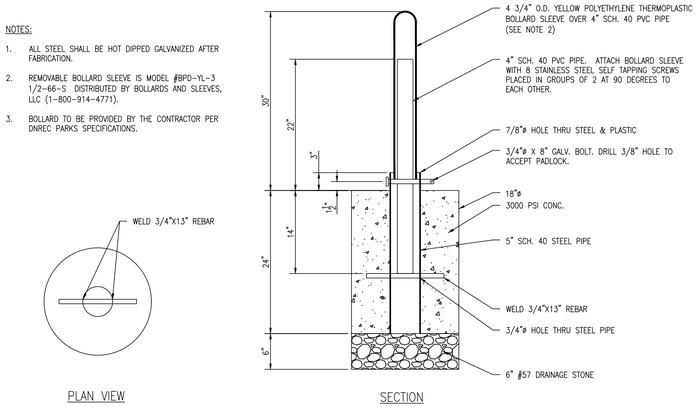

3 C311 REMOVABLE BOLLARD DETAIL
SCALE: N.T.S.

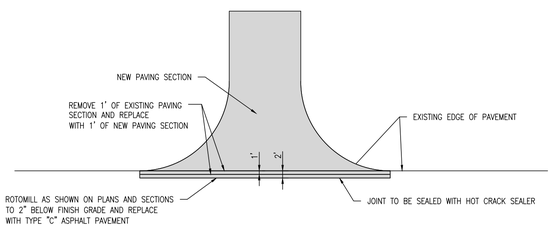

4 C311 TYPICAL SAWCUT DETAIL
SCALE: N.T.S.

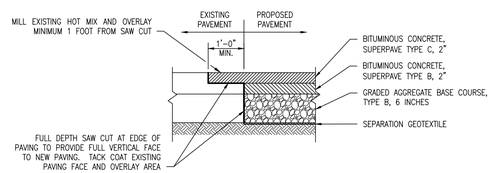

5 C311 PAVEMENT TIE-IN DETAIL
SCALE: N.T.S.

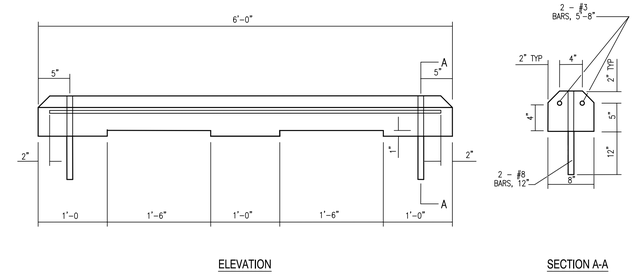

6 C311 CONCRETE WHEEL STOP DETAIL
SCALE: N.T.S.

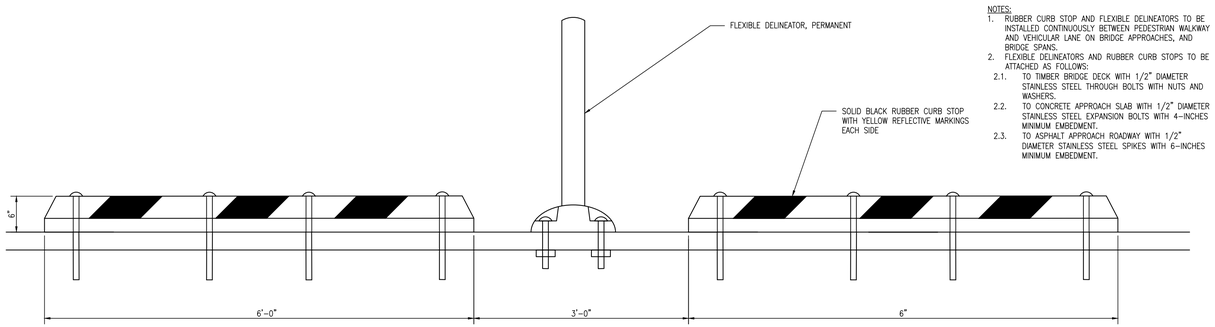

NOTES:
1. RUBBER CURB STOP AND FLEXIBLE DELINEATORS TO BE INSTALLED CONTINUOUSLY BETWEEN PEDESTRIAN WALKWAY AND VEHICULAR LANE ON BRIDGE APPROACHES, AND BRIDGE SPANS.
2. FLEXIBLE DELINEATORS AND RUBBER CURB STOPS TO BE ATTACHED AS FOLLOWS:
   2.1. TO TIMBER BRIDGE DECK WITH 1/2" DIAMETER STAINLESS STEEL THROUGH BOLTS WITH NUTS AND WASHERS.
   2.2. TO CONCRETE APPROACH SLAB WITH 1/2" DIAMETER STAINLESS STEEL EXPANSION BOLTS WITH 4-INCHES MINIMUM EMBEDMENT.
   2.3. TO ASPHALT APPROACH ROADWAY WITH 1/2" DIAMETER STAINLESS STEEL SPIKES WITH 6-INCHES MINIMUM EMBEDMENT.

7 C311 PEDESTRIAN / VEHICLE DELINEATOR DETAIL
SCALE: N.T.S.

REVISIONS:

DATE:	DESCRIPTION:	BY:

AUBURN VALLEY STATE PARK
FARM LANE BRIDGE PHASE 2

CONSTRUCTION DETAILS

SEAL: WALTER J. HOEY II REGISTERED NO. 11204 DELAWARE PROFESSIONAL ENGINEER
8/19/2021

CIVIL ENGINEER:
CENTURY ENGINEERING
CONSULTING ENGINEERS, SURVEYORS
550 S. BAY ROAD
DOVER, DELAWARE 19901

CONTRACT NO.: 175013.09

DELAWARE STATE PARKS
YOUR OUTDOOR ADVENTURE STARTS HERE

DESIGNED BY: WJH
DRAWN BY: ZTP/DLD
CHECKED BY: AES
DATE: AUGUST 2021
SCALE: NONE
SHEET NO.: C311
CONTRACT NO.: NAT21021-AVFARMLANE

G:\Projects\175013.00 (DNREC 2017 Engineering DET)\175013.09 (Farm Lane Bridge)\CAD FILES 2\SHEETS\CONSTRUCTION PLANS\C311 CONSTRUCTION DETAILS.dwg, 8/20/2021 10:08 AM

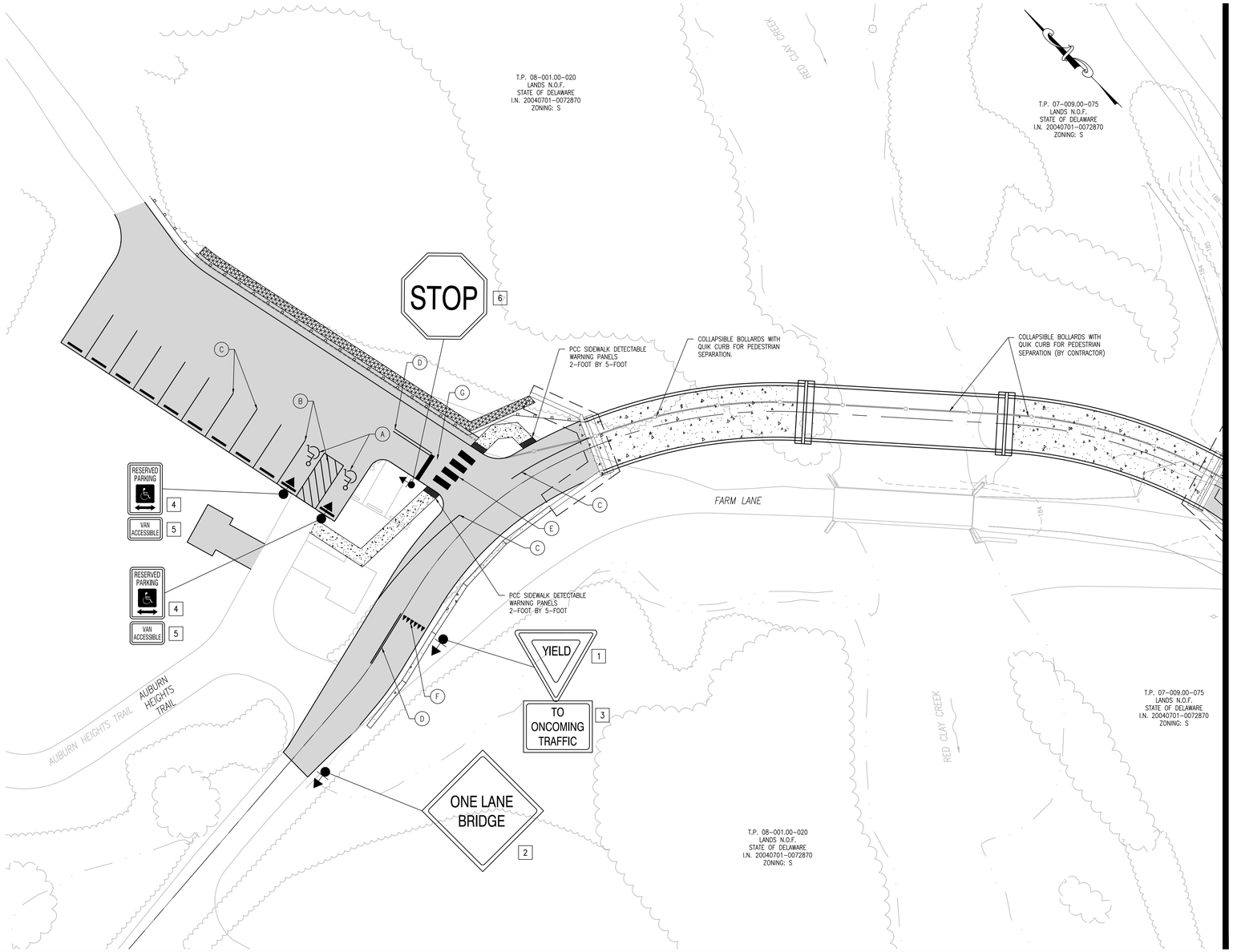

SIGN SCHEDULE:

PERMANENT SIGN SCHEDULE

SHEET NO.	PLAN IDENTIFIER	SIGN DESIGNATION	QTY.	DESCRIPTION	SIGN WIDTH (IN)	SIGN HEIGHT (IN)	SIGN AREA (SF)	ITEM 819018 INSTALLATION OR REMOVAL OF TRAFFIC SIGN(S) ON SINGLE POST (EACH)			ITEM 819019 INSTALLATION OR REMOVAL OF TRAFFIC SIGN(S) ON MULTIPLE SIGN POSTS (SF)			POST INSTALLATION TYPE	Code X11 12' Post (W/Basepost) (EACH)	Code X11A 15' Post (W/Basepost) (EACH)	ITEM 819016 4"HOLE, 0-6" (EACH)	ITEM 819017 4"HOLE, >6" (EACH)	REMARKS
								SIGN DISPOSITION	REMOVE	INSTALL	SIGN DISPOSITION	REMOVE	INSTALL						
	1	R1-2(30)	2	YIELD	30	30	5.4	NEW		2				SOIL					
	2	W5-3(30)	2	ONE LANE BRIDGE - 30x30	30	30	12.5	NEW		2				SOIL	2				
	3	R1-2aP(24)	1	TO ONCOMING TRAFFIC (plaque)	24	18	3.0	NEW		1				SOIL	1				
	4	R7-8	2	RESERVED PARKING (Disabilities - symbols)	12	18	3.0	NEW		2				SOIL	2				
	5	R7-8P	2	VAN ACCESSIBLE (plaque)	18	9	2.3	NEW		2				SOIL	2				
	6	R1-1(24)	2	STOP (on stop/slow paddle)	24	24	6.6	NEW		2				SOIL	2				
PAGE TOTALS							33		0	11		0	0		9	0	0	0	

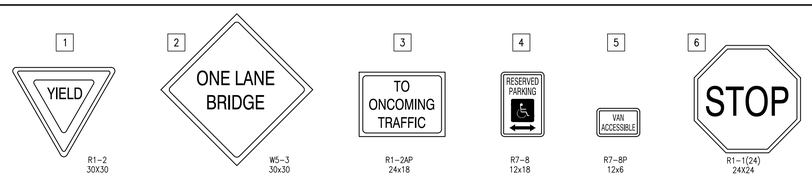

PAVEMENT MARKINGS LEGEND

SYMBOL	ITEM	MATERIAL
A	BLUE HANDICAP SYMBOL	EPOXY
B	4" SOLID WHITE SOLID PAVEMENT STRIPING	EPXOY
C	5" SOLID WHITE STRIPE	EPOXY
D	5" DOUBLE YELLOW STRIPE	EPOXY
E	24" SOLID WHITE PAVEMENT STRIPING	THERMOPLASTIC PAINT
F	WHITE YIELD LINE	THERMOPLASTIC PAINT
G	16" SOLID WHITE PAVEMENT STRIPING	THERMOPLASTIC PAINT

NOTES:

1. CONTRACTOR TO VERIFY LOCATION OF EXITING UTILITIES. PROPOSED SIGNS TO BE PLACED WITH REQUIRED CLEARANCE FROM ALL UTILITIES.

0' 20' 40' 60'
SCALE: 1" = 20'

REVISIONS:

DATE:	DESCRIPTION:	BY:

AUBURN VALLEY STATE PARK
FARM LANE BRIDGE PHASE 2

SEAL:

WALTER J. HOEY III
REGISTERED
NO. 11204
DELAWARE
PROFESSIONAL ENGINEER

8/19/2021

CIVIL ENGINEER:

CENTURY ENGINEERING
CONSULTING ENGINEERS, SURVEYORS
550 S. BAY ROAD
DOVER, DELAWARE 19901

CONTRACT NO.: 175013.09

DELAWARE STATE PARKS
YOUR OUTDOOR ADVENTURE STARTS HERE

DESIGNED BY: WJH

DRAWN BY: ZTP/DLD

CHECKED BY: AES

DATE: AUGUST 2021

SCALE: 1" = 20'

SHEET NO.: C313

CONTRACT NO.: NAT21021-AVFARMLANE

G:\Projects\175013.00 (DMBE 2017 Engineering IQ)\175013.09 (Farm Lane Bridge)\CAD FILES 2\SHEETS\CONSTRUCTION PLANS\C313 SIGNING AND STRIPING PLAN.dwg, 8/20/2021 10:09 AM

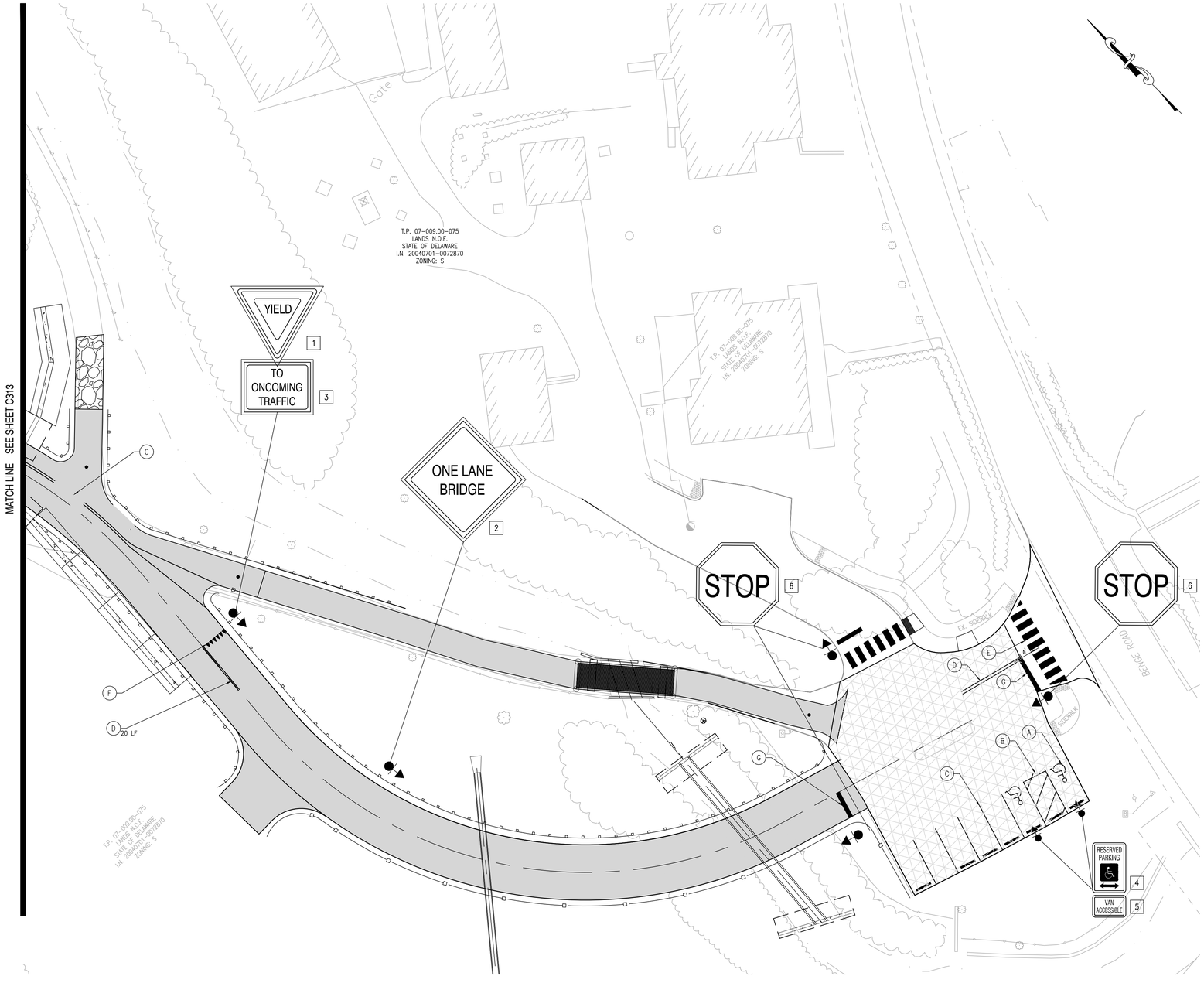

NOTES:
1. REFER TO SHEET C313 FOR SIGN SCHEDULE AND PAVEMENT MARKING LEGEND.

0' 20' 40' 60'
SCALE: 1" = 20'

REVISIONS:

DATE:	DESCRIPTION:	BY:

AUBURN VALLEY STATE PARK
FARM LANE BRIDGE PHASE 2

SIGNING AND STRIPING PLAN

SEAL:
WALTER J. HOEY III
REGISTERED
NO. 11204
DELAWARE
PROFESSIONAL ENGINEER
8/19/2021

CIVIL ENGINEER:
CENTURY ENGINEERING
CONSULTING ENGINEERS, SURVEYORS
550 S. BAY ROAD
DOVER, DELAWARE 19901

CONTRACT NO.: 175013.09

DELAWARE STATE PARKS
YOUR OUTDOOR ADVENTURE STARTS HERE

DESIGNED BY: WJH
DRAWN BY: ZTP/DLD
CHECKED BY: AES
DATE: AUGUST 2021
SCALE: 1" = 20'
SHEET NO.: C314
CONTRACT NO.: NAT21021-AVFARMLANE

G:\Projects\175013.00 (DNREC 2017 Engineering DET)\175013.09 (Farm Lane Bridge)\CAD FILES 2\SHEETS\CONSTRUCTION PLANS\C314 SIGNING AND STRIPING PLAN.dwg, 8/26/2021 10:09 AM

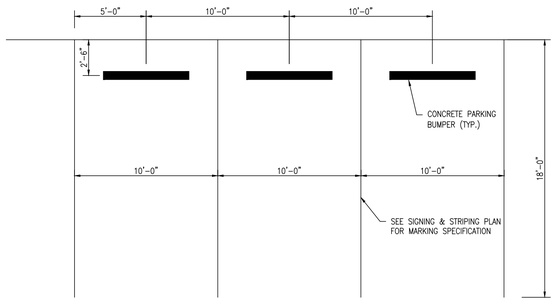

1 C315 TYPICAL PARKING LOT STRIPING DETAIL
SCALE: N.T.S.

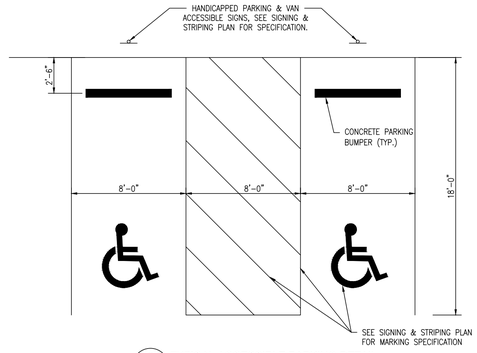

2 C315 TYPICAL ACCESSIBLE PARKING DETAIL
SCALE: N.T.S.

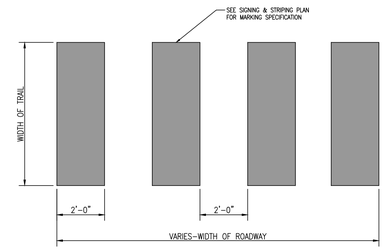

3 C315 TYPICAL CROSSWALK DETAIL
SCALE: N.T.S.

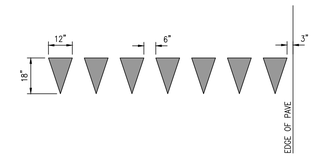

4 C315 YIELD LINE DETAIL
SCALE: N.T.S.

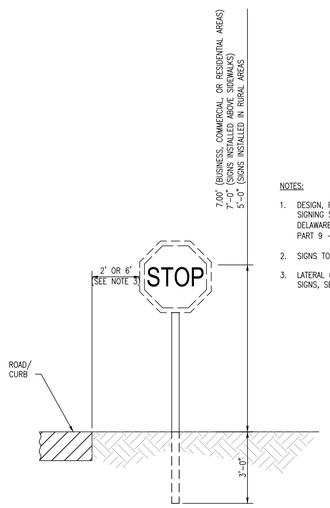

NOTES:

1. DESIGN, FABRICATION AND INSTALLATION OF ALL PERMANENT SIGNING SHALL COMPLY WITH THE LATEST EDITION OF THE DELAWARE MUTCD. (SPECIFIC REQUIREMENTS OUTLINED UNDER PART 9 – TRAFFIC CONTROLS FOR BICYCLE FACILITIES.)
2. SIGNS TO BE ON 2" SQUARE TUBING.
3. LATERAL OFFSET TO COMPLY WITH DELAWARE MUTCD, PART 2 – SIGNS, SECTION 2A.19 LATERAL OFFSET

5 C315 SIGN PLACEMENT DETAIL
SCALE: N.T.S.

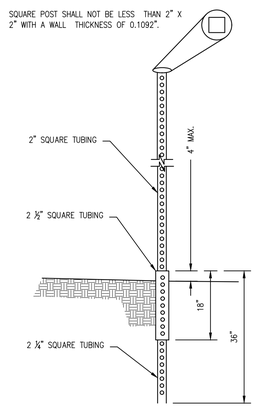

NOTES:

1. SQUARE TUBES ARE TO BE FORMED FROM GALVANIZED SHEET STRUCTURAL (PHYSICAL) QUALITY, ASTM A 446, GRADE A, COATING DESIGNATION G 90, REGULAR SPANGLE, OR HOT ROLLED CARBON SHEET STEEL STRUCTURAL (PHYSICAL) QUALITY, ASTM A 570, GRADE 33.
   A. NOMINAL OUTSIDE DIMENSION, (INCHES):
      2 X 2
      2 1/4 X 2 1/4
      2 1/2 X 2 1/2
   B. ALL FOUR SIDES ARE TO HAVE EVENLY SPACED 7/16" DIAMETER HOLES ON 1" CENTERS THE ENTIRE LENGTH OF THE TUBE.
   C. TOLERANCE ON HOLE SIZE IS ± 1/64". TOLERANCE ON HOLE SPACING IS ± 1/8" IN 20 FEET.
   D. STANDARD CORNER RADIUS SHALL BE 5/32" ± 1/64".
   E. THE FASTENERS TO BE SUPPLIED UNDER THIS SPECIFICATION SHALL BE 5/16" GRADE 5 UNC CORNER BOLTS WITH CADMIUM OR ZINC PLATING, INSTALLATION OF SIGNS SHALL BE WITH 3/8" X 2 1/2" BOLT WITH LOCKNUT AND WASHER.
2. REGULATORY SIGNS WIDER THAN 30" SHALL BE MOUNTED ON TWO POSTS. WHEN MORE THAN ONE REGULATORY SIGN IS TO BE INSTALLED ON THE SAME POST ASSEMBLY, THE MOUNTING HOLES SHALL BE DRILLED IN THE FIELD AS THE ASSEMBLY IS BEING CONSTRUCTED.
3. DEVELOPMENT SIGNS THAT ARE GREATER THAN 36" WIDE SHALL BE DISPLAYED ON TWO POSTS.
   A. DEVELOPMENT SIGN FACE BACKGROUNDS SHALL BE GREEN; LEGENDS SHALL BE SILVER (WHITE).
   B. LEGEND SHALL BE 5" SERIES "C" LETTERS.
   C. NO BORDER ON DEVELOPMENT SIGN PANELS.
   D. MAXIMUM DEVELOPMENT SIGN WIDTH OF 36" FOR SINGLE LINE SIGNS, 54" FOR TWO OR MORE LINES.
   E. DEVELOPMENT SIGNS SHALL BE INSTALLED WITHIN THE RIGHT-OF-WAY OF THE HIGHWAY ON WHICH THE ENTRANCE(S) IS (ARE) LOCATED. THE SIGNS SHALL BE PLACED WITHIN 750 FEET OF THE CENTERLINE OF THE ENTRANCE(S).

6 C315 TELESCOPING SIGN POST DETAIL
SCALE: N.T.S.

REVISIONS:

DATE:	DESCRIPTION:	BY:

AUBURN VALLEY STATE PARK
FARM LANE BRIDGE PHASE 2

SIGNING AND STRIPING DETAILS

SEAL:
WALTER J. HOEY, III
REGISTERED
NO. 11204
DELAWARE
PROFESSIONAL ENGINEER
8/19/2021

CIVIL ENGINEER:
CENTURY ENGINEERING
CONSULTING ENGINEERS, SURVEYORS
550 S. BAY ROAD
DOVER, DELAWARE 19901

CONTRACT NO.: 175013.09

DELAWARE STATE PARKS
YOUR OUTDOOR ADVENTURE STARTS HERE

DESIGNED BY: WJH
DRAWN BY: ZTP/DLD
CHECKED BY: AES
DATE: AUGUST 2021
SCALE: NONE
SHEET NO.: C315
CONTRACT NO.: NAT21021-AVFARMLANE

G:\Projects\175013.00 (NMEC 2017 Engineering RFE)\175013.09 (Farm Lane Bridge)\CADD FILES 2\SHEETS\CONSTRUCTION PLANS\C315 SIGNING AND STRIPING DETAILS.dwg, 8/20/2021 10:09 AM

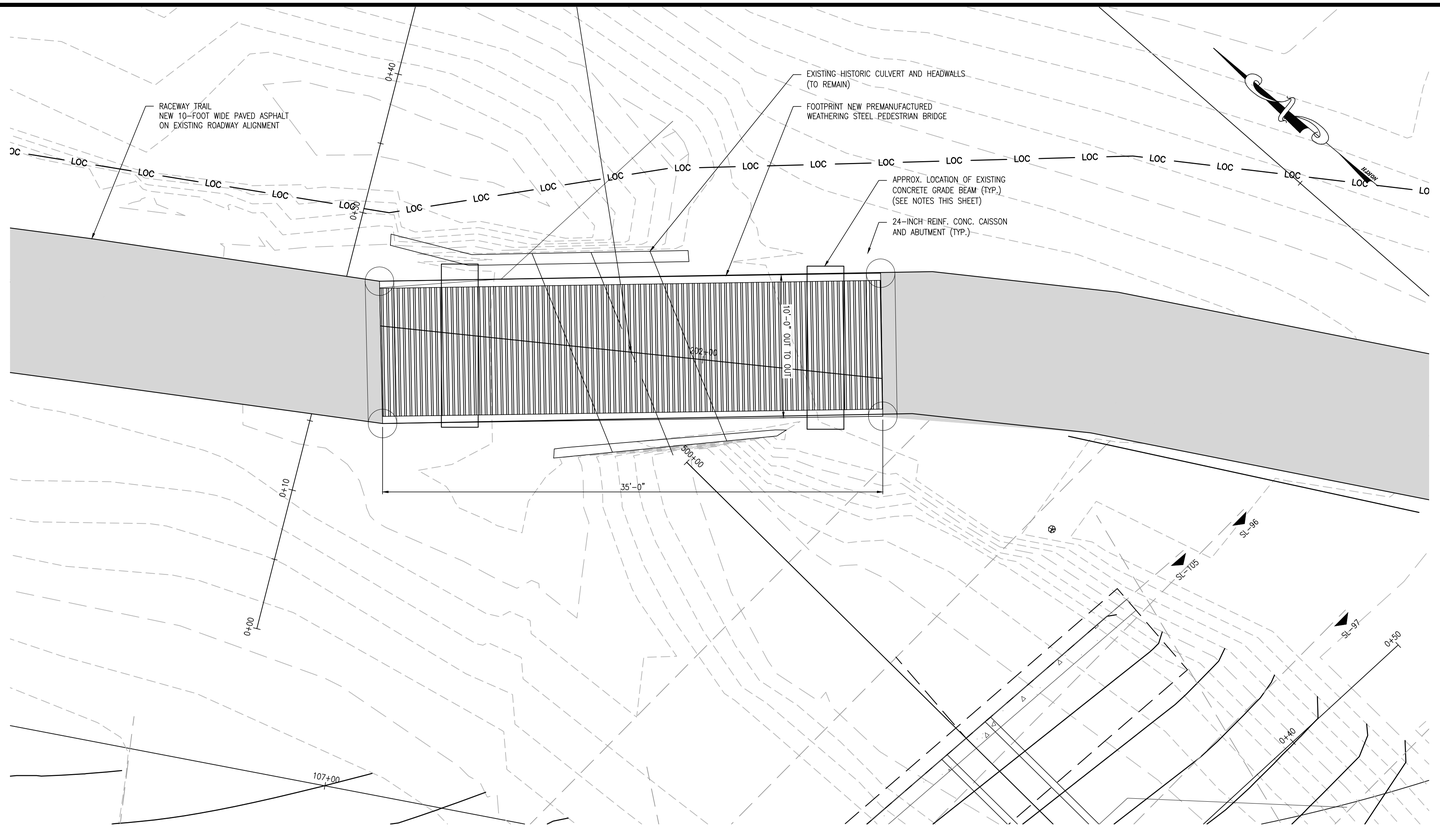

1 C316 RACEWAY TRAIL BRIDGE PLAN
SCALE: 1" = 5'-0"

BRIDGE GENERAL NOTES:

1. EXISTING CONCRETE GRADE BEAMS SHOWN ON PLANS ARE TO BE LOCATED BY CONTRACTOR PRIOR TO CONSTRUCTION.
2. CONTRACTOR SHALL ASSUME REMOVAL, OR PARTIAL REMOVAL OF GRADE BEAMS SHALL BE NECESSARY FOR THE CONSTRUCTION OF THE NEW CAISSONS AND ABUTMENTS AND NO ADDITIONAL COST TO THE OWNER.
3. EXISTING HISTORIC CULVERT SHALL BE PROTECTED FROM COLLAPSE BY THE CONTRACTOR.
4. THE CONTRACTOR SHALL REMOVE ALL TIMBER MATTS AND/OR STEEL PLATING ON THE HISTORIC CULVERT PRIOR TO CONSTRUCTION OF THE NEW BRIDGE. VEHICLES SHALL BE PROHIBITED FROM CROSSING THE CULVERT ONCE MATTS AND PLATING ARE REMOVED.

DESIGN:
SERVICE LOAD DESIGN (ABUTMENTS)
ALLOWABLE STRESS DESIGN OR LOAD RESISTANCE FACTOR DESIGN (SUPERSTRUCTURE)

LOADS:
LIVE LOAD – IN ACCORDANCE WITH AASHTO GUIDE SPECIFICATIONS FOR DESIGN OF PEDESTRIAN BRIDGES, 2ND EDITION, EXCEPT AS NOTED.

VEHICLE LOAD – 2,000 POUNDS.

MATERIALS:
BRIDGE SUPERSTRUCTURE SHALL BE HOLLOW STEEL SECTIONS, AS NOTED IN THE TECHNICAL SPECIFICATIONS. FIELD CONNECTIONS SHALL BE MADE WITH ASTM A325 BOLTS, HOT-DIPPED IN ACCORDANCE WITH ASTM A-153, WITH LOCK WASHERS AND NUTS. ALL STEEL TUBING SHALL BE ASTM A847 WEATHERING STEEL, OR APPROVED EQUAL.

ALL REINFORCING STEEL SHALL BE AASHTO M31, GRADE 60 (ASTM A615).

WOOD DECKING SHALL BE SOUTHERN YELLOW PINE, NO. 2 AND SHALL BE TREATED WITH AMMONIACAL COPPER QUAT, TYPE B (ACQ TYPE B) WITH A MINIMUM RETENTION OF 0.40 LBS/FT3. FIELD TREATMENT OF HOLES AND CUTS SHALL BE IN ACCORDANCE WITH THE TECHNICAL SPECIFICATIONS.

CONCRETE FOR ABUTMENT FOOTING SHALL BE DELDOT CLASS B ($f'c$ = 3000 PSI) AND SHALL CONFORM TO SECTION 602003 – PORTLAND CEMENT CONCRETE MASONRY, ABUTMENT FOOTING, CLASS B.

CONCRETE FOR ABUTMENT STEM, WINGWALL AND BACKWALL SHALL BE DELDOT CLASS A
($f'c$ = 4500 PSI) AND SHALL CONFORM TO SECTION 602015 – PORTLAND CEMENT MASONRY, ABUTMENT ABOVE FOOTING, CLASS A.

CONCRETE FOR ANY SUBFOUNDATIONS SHALL BE DELDOT CLASS B ($f'c$ = 3000 PSI).

MINIMUM CONCRETE COVER FOR REBAR SHALL BE: 3" MINIMUM FOR SURFACES CAST AGAINST EARTH, AND 2" FOR ALL OTHER FIELD-FORMED SURFACES.

CHAMFER ALL EXPOSED EDGES 3/4" UNLESS OTHERWISE NOTED.

BRIDGE DESIGN AND CONSTRUCTION:
THE BRIDGE SHALL BE PRATT TRUSS SYSTEM, WITH ONE DIAGONAL PER PANEL, OR AN APPROVED EQUAL. ALL END POSTS AND INTERMEDIATE POSTS SHALL BE PLUMB (VERTICAL). ANY REQUEST FOR APPROVAL SHALL BE SUBMITTED AS A REQUEST FOR SUBSTITUTION IN ACCORDANCE WITH SPECIFICATION SECTION 016000 OF THE PROJECT MANUAL.

DESIGN AND MANUFACTURE OF THE BRIDGE SHALL BE IN ACCORDANCE WITH SECTION 132950 – PREFABRICATED STEEL BRIDGE. THE CONTRACTOR SHALL SUBMIT AN ERECTION PLAN TO THE ENGINEER FOR REVIEW A MINIMUM OF 30 CALENDAR DAYS PRIOR TO ANY SCHEDULED BRIDGE ERECTION. NECESSARY REVISIONS AND ADDITIONS TO THE ERECTION PLAN AS DEEMED NECESSARY BY THE ENGINEER SHALL BE PREPARED BY THE CONTRACTOR AND SUBMITTED FOR REVIEW. THE ENGINEER MUST APPROVE AN ERECTION PLAN BEFORE ANY TRUSS PLACEMENT WORK SHALL BE PERMITTED. THE SUBMITTAL MUST CONTAIN, BUT IS NOT LIMITED TO, THE FOLLOWING:

1. CALCULATIONS SHOWING THE WEIGHT OF MATERIALS AND LIFTING EQUIPMENT.
2. TYPE AND POSITIONING OF EQUIPMENT, INCLUDING MOVEMENTS.
3. LOCATION OF STAGING AREA(S).

CONTRACTOR/FABRICATOR SHALL CONSIDER SITE ACCESSIBILITY AND ERECTION PATH IN DETERMINING MAXIMUM BRIDGE SPLICE LENGTHS FOR PREFABRICATION. SHOP DRAWINGS AND CALCULATIONS SHALL SHOW THE SPLICE LOCATIONS. ALL PLANS AND CALCULATIONS SHALL BE SIGNED AND SEALED BY A PROFESSIONAL ENGINEER REGISTERED IN THE STATE OF DELAWARE.

CONTRACTOR SHALL PROVIDE DEWATERING SYSTEM AS NECESSARY FOR CONSTRUCTION OF BRIDGE ABUTMENTS. DEWATERING SYSTEM SHALL BE INCIDENTAL TO THE CONTRACT. CONTRACTOR SHALL OBTAIN ANY NECESSARY DEWATERING PERMITS.

PROVIDE 1/2 INCH THICK WEATHERING STEEL COVER PLATES WITH 1/4 INCH BEVEL ON TOP FACES, AS SPECIFIED IN THE PROJECT MANUAL TO COVER GAP BETWEEN TIMBER DECKING AND CONCRETE ABUTMENT BACKWALL. COVER PLATES TO BE ATTACHED TO BRIDGE DECK WITH 1/2 INCH DIAMETER STAINLESS STEEL BEVEL HEAD BOLTS WITH HEADS COUNTERSUNK FLUSH WITH PLATE. COVER PLATES TO BE ONE PIECE FABRICATED TO FIT THE FULL WIDTH OF THE DECK.

CONTRACTOR TO PROVIDE AND INSTALL STAINLESS STEEL ANCHOR BOLTS, NUTS, AND WASHERS AS REQUIRED BY THE BRIDGE MANUFACTURER. ANCHOR BOLTS SHALL BE DESIGNED TO RESIST BRIDGE LOADS AS PROVIDED BY THE MANUFACTURER. MINIMUM EMBEDMENT DEPTH OF ANCHOR BOLTS TO BE 6 INCHES.

BOLTED CONNECTIONS THAT ARE EXPOSED TO PEDESTRIANS ON THE BRIDGE SHALL BE POSITIONED SUCH THAT THE BOLT HEADS FACE THE DECK AND NUTS FACE AWAY FROM THE CENTERLINE OF THE BRIDGE.

NO FILL, TEMPORARY SCAFFOLDING, MATTING, PERSONNEL, OR EQUIPMENT IS/ARE TO BE PLACED WITHIN STREAM BED.

TRANSPORTING OF MACHINERY OR VEHICLES ACROSS STREAM SHALL NOT BE ALLOWED.

CONSTRUCTION VEHICLES SHALL BE PROHIBITED FROM PASSING OVER THE NEW BRIDGE UNLESS APPROVED BY THE STATE.

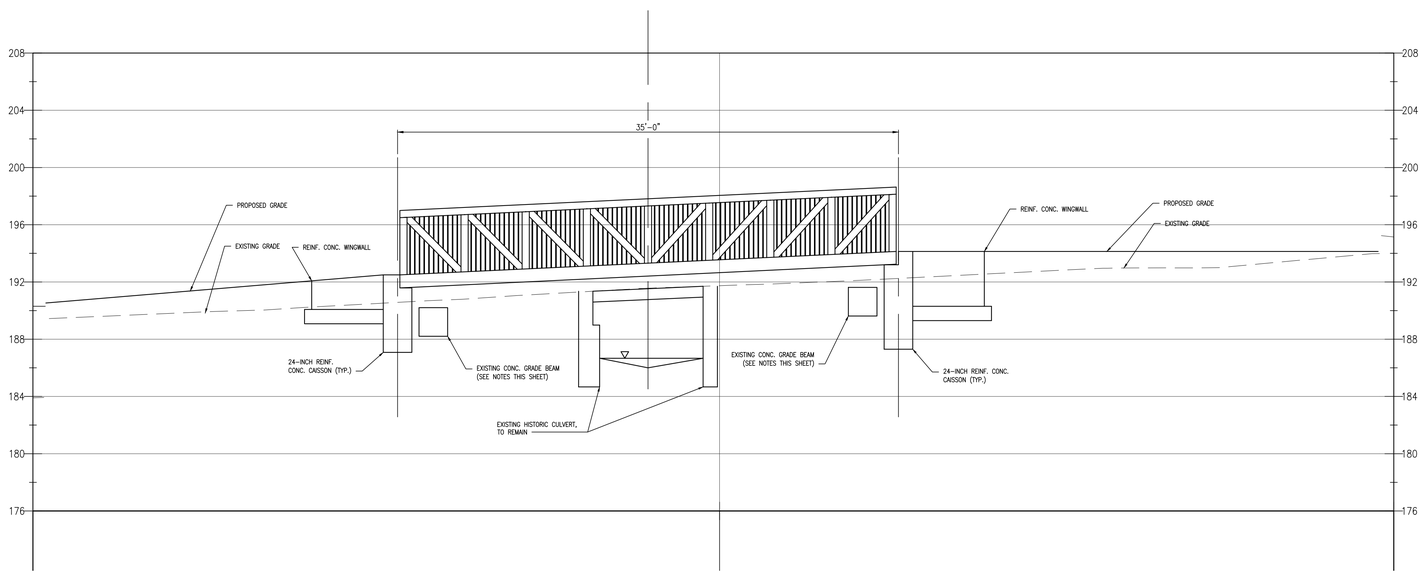

2 C316 RACEWAY TRAIL BRIDGE ELEVATION
SCALE: 1" = 5'-0"

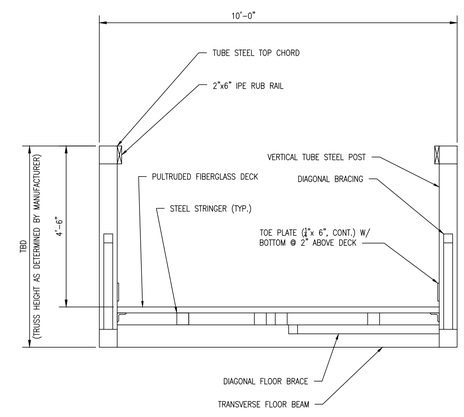

3 C316 RACEWAY TRAIL BRIDGE SECTION
SCALE: NONE

REVISIONS:
DATE: DESCRIPTION: BY:

AUBURN VALLEY STATE PARK
FARM LANE BRIDGE PHASE 2

RACEWAY BRIDGE - RACEWAY BRIDGE

SEAL:
WALTER J. HOEY III
REGISTERED
NO. 11204
DELAWARE
PROFESSIONAL ENGINEER
8/19/2021

CIVIL ENGINEER:
CENTURY ENGINEERING
CONSULTING ENGINEERS, SURVEYORS
550 S. BAY ROAD
DOVER, DELAWARE 19901

CONTRACT NO.: 175013.09

DELAWARE STATE PARKS
YOUR OUTDOOR ADVENTURE STARTS HERE

DESIGNED BY: WJH
DRAWN BY: ZTP/DLD
CHECKED BY: AES
DATE: AUGUST 2021
SCALE:
SHEET NO.: C316
CONTRACT NO.: NAT21021-AVFARMLANE

G:\Projects\175013.00 (DNREC 2017 Engineering IQC)\175013.09 (Farm Lane Bridge)\CADD FILES Z\SHEETS\CONSTRUCTION PLANS\C1161 - RACEWAY BRIDGE.dwg, 8/20/2021 10:11 AM

1 C320 RACEWAY PIPE PLAN
SCALE: 1"= 10'-0"

NOTE:
SEE PLAN SHEET C321 FOR WORKING POINT SCHEDULE.

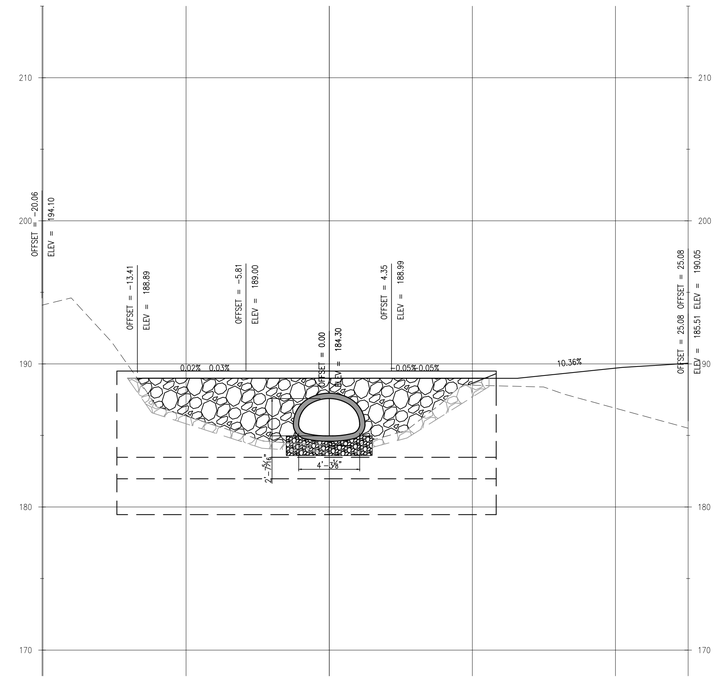

3 C320 RACEWAY HEADWALL #1 ELEVATION
SCALE: 1"= 5'-0"

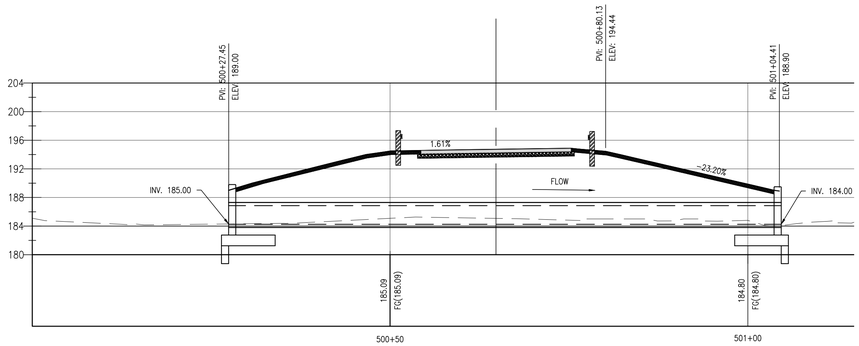

2 C320 RACEWAY PIPE SECTION
SCALE: 1"= 10'-0"

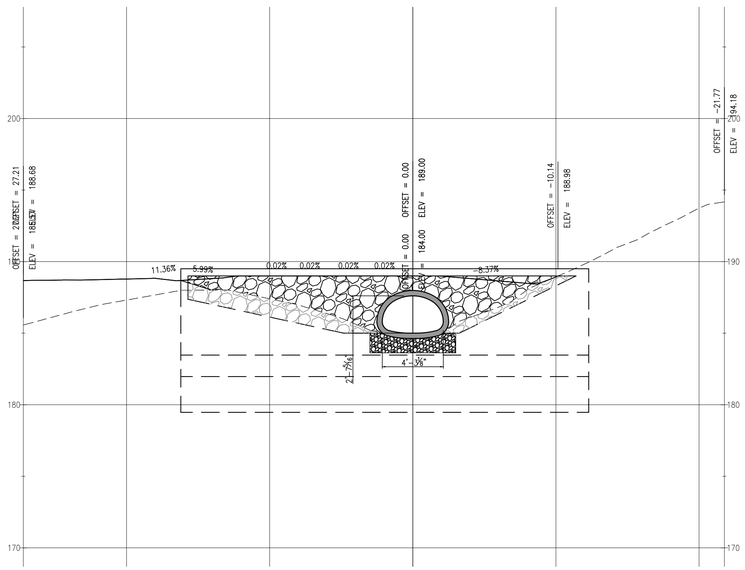

4 C320 RACEWAY HEADWALL #2 ELEVATION
SCALE: 1"= 5'-0"

REVISIONS:

DATE:	DESCRIPTION:	BY:

AUBURN VALLEY STATE PARK
FARM LANE BRIDGE PHASE 2

RACEWAY CULVERT PLAN & ELEVATION

SEAL:
WALTER J. HOEY, III
REGISTERED
NO. 11204
DELAWARE
PROFESSIONAL ENGINEER
8/19/2021

CIVIL ENGINEER:
CENTURY ENGINEERING
CONSULTING ENGINEERS, SURVEYORS
550 S. BAY ROAD
DOVER, DELAWARE 19901

CONTRACT NO.: 175013.09

DELAWARE STATE PARKS
YOUR OUTDOOR ADVENTURE STARTS HERE

DESIGNED BY: WJH

DRAWN BY: ZTP/DLD

CHECKED BY: AES

DATE: AUGUST 2021

SCALE: AS SHOWN

SHEET NO.: C320

CONTRACT NO.: NAT21021-AVFARMLANE

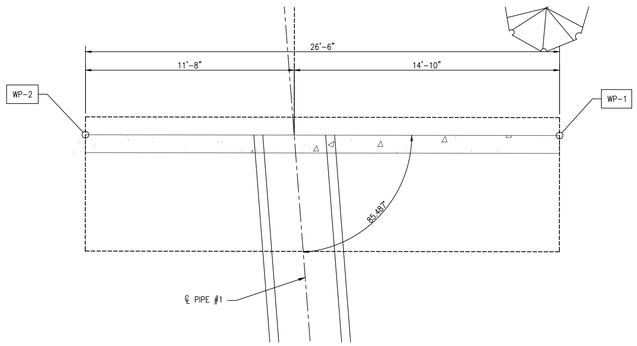

1 / C321 HEADWALL #1 PLAN
SCALE: 1/4"= 1'-0"

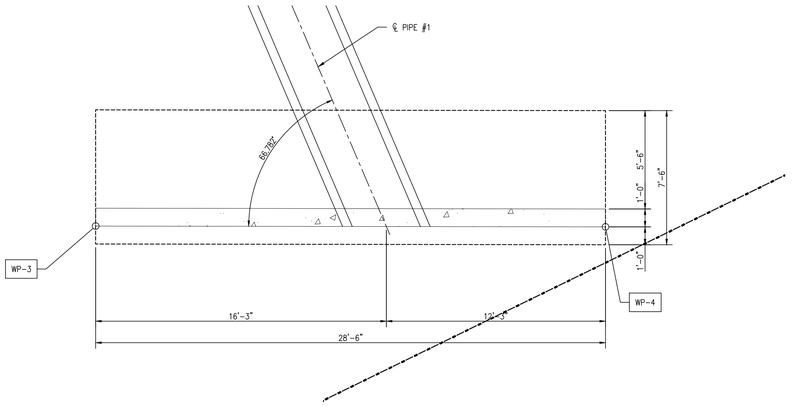

2 / C321 HEADWALL #2 PLAN
SCALE: 1/4"= 1'-0"

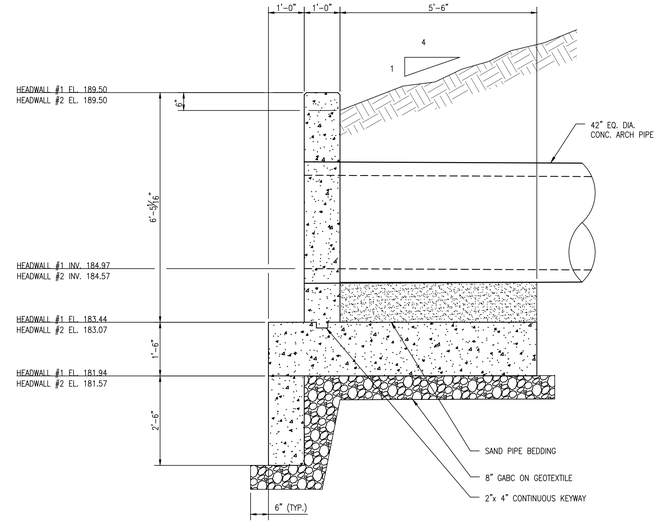

3 / C321 RACEWAY HEADWALL TYPICAL SECTION
SCALE: 1/2"= 1'-0"

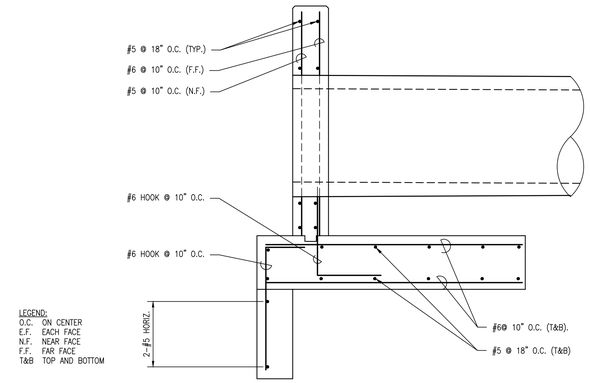

4 / C321 RACEWAY HEADWALL REBAR DETAILS
SCALE: 1/2"= 1'-0"

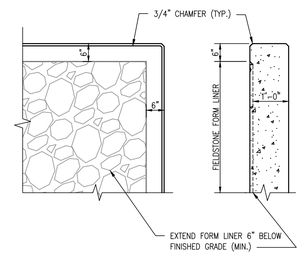

7 / C321 RACEWAY HEADWALL FORMLINER DETAILS
SCALE: 1/2"= 1'-0"

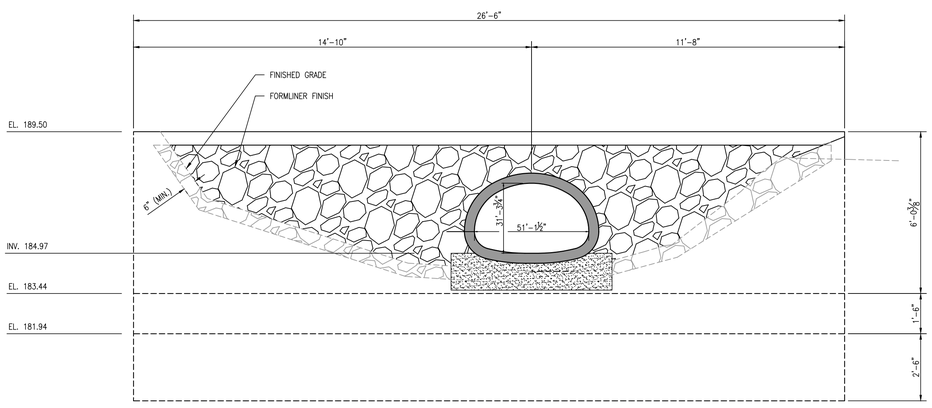

5 / C321 RACEWAY HEADWALL #1 TYPICAL ELEVATION
SCALE: 3/8"= 1'-0"

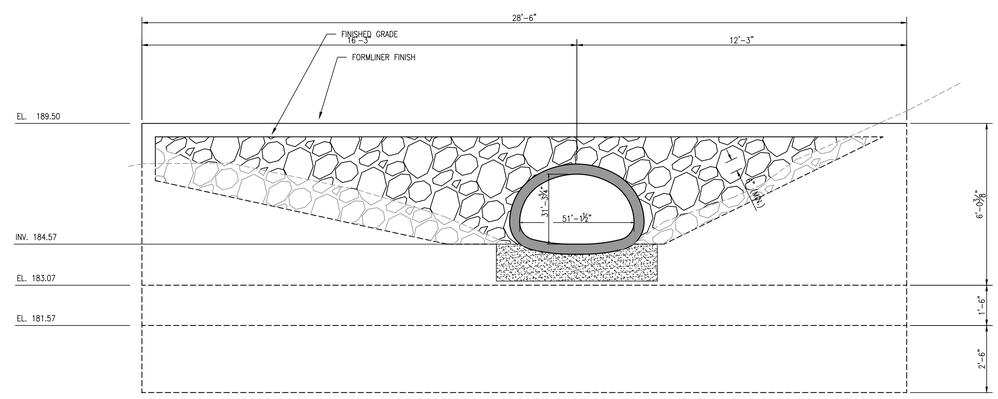

6 / C321 RACEWAY HEADWALL #2 TYPICAL ELEVATION
SCALE: 3/8"= 1'-0"

REVISIONS:

DATE:	DESCRIPTION:	BY:

AUBURN VALLEY STATE PARK
FARM LANE BRIDGE PHASE 2

RACEWAY CULVERT DETAILS

SEAL:
WALTER J. HOEY, II
REGISTERED
NO. 11204
DELAWARE
PROFESSIONAL ENGINEER
8/19/2021

CIVIL ENGINEER:
CENTURY ENGINEERING
CONSULTING ENGINEERS, SURVEYORS
550 S. BAY ROAD
DOVER, DELAWARE 19901

CONTRACT NO.: 175013.09

DELAWARE STATE PARKS
YOUR OUTDOOR ADVENTURE STARTS HERE

DESIGNED BY: WJH
DRAWN BY: ZTP/DLD
CHECKED BY: AES
DATE: AUGUST 2021
SCALE: AS SHOWN
SHEET NO.: C321
CONTRACT NO.: NAT21021-AVFARMLANE

G:\Projects\175013.00 (DNREC 2017 Engineering RFP)\175013.09 (Farm Lane Bridge)\CADD FILES 2\SHEETS\CONSTRUCTION PLANS\C321 - HEADWALL SECTIONS.dwg, 8/20/2021 10:12 AM

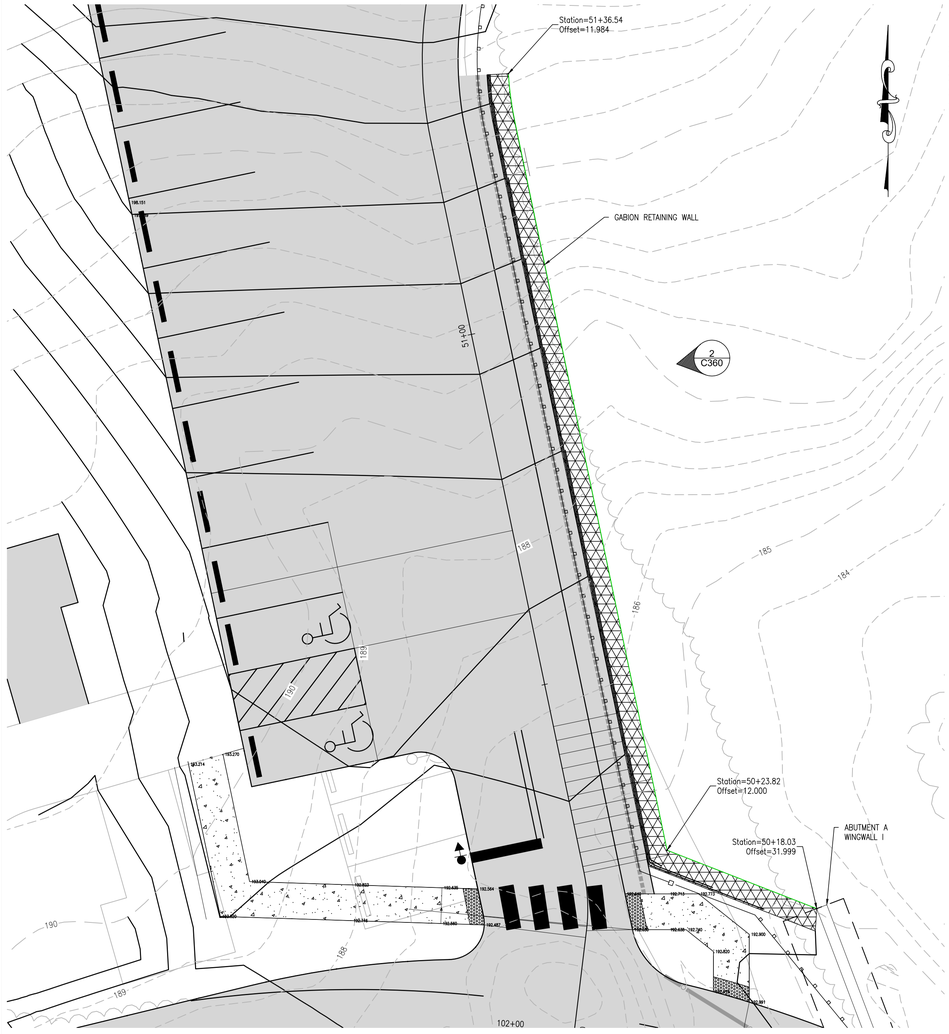

1 C360 PARKING LOT GABION WALL - PLAN
SCALE: 1"= 10'-0"

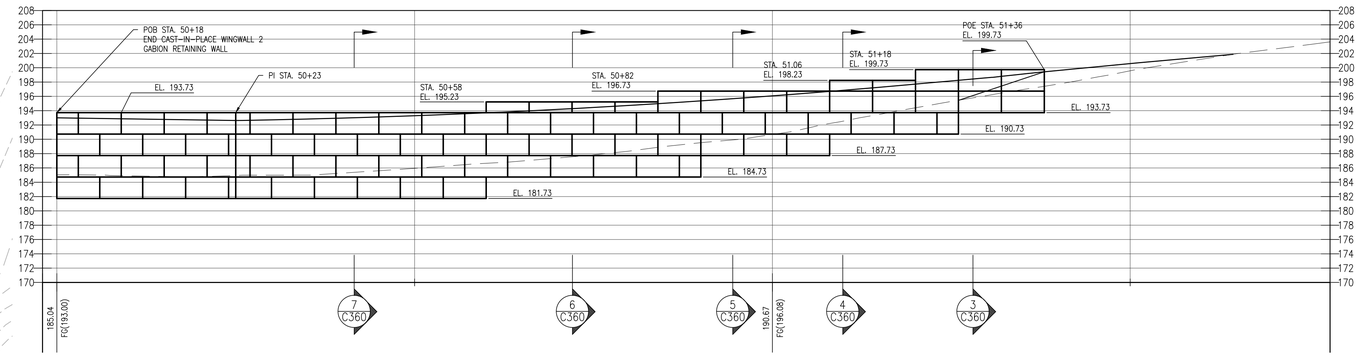

2 C360 PARKING LOT GABION WALL ELEVATION
SCALE: 1"= 10'-0"

NOTES:

1. ELEVATION UTILIZES PARKING LOT ALIGNMENT FOR STATIONING.
2. GUARDRAIL NOT SHOWN FOR CLARITY.
3. CONTRACTOR MAY SUBSTITUTE PRE-CAST CONCRETE ELEMENT RETAINING WALL IN PLACE OF GABION WALL AT NO ADDITIONAL COST TO THE OWNER. COMPUTATIONS AND DRAWINGS FOR SUBSTITUTION SHALL BE SIGNED AND SEALED BY AN ENGINEER REGISTERED IN THE STATE OF DELAWARE. ACCEPTABLE MANUFACTURERS INCLUDE:
   - 3.1. REDI-ROCK (WWW.REDI-ROCK.COM).
   - 3.2. STRONG STONE SYSTEMS (WWW.STRONGSTONE.COM).
   - 3.3. APPROVED EQUAL.

GABION NOTES:

1. ALL DIMENSIONS MUST BE CHECKED ON SITE AND NOT SCALED FROM THIS DRAWING.
2. GABIONS ARE TO BE INSTALLED IN ACCORDANCE WITH MANUFACTURER'S INSTRUCTIONS.
3. ALL GABION PANEL INTERSECTIONS ARE TO BE LACED WITH WIRE MATCHING THE GABION MESH.
4. INTERNAL BRACING WIRES ARE TO BE PROVIDED TO EPOSED FACES. WIRE TO MATCH GABION MESH. WIRE TO BE PROVIDED AT 1/3 AND 2/3 GABION HEIGHT FOR 3-FOOT HIGH GABIONS, AND 1/2 HEIGHT FOR 1.5-FOOT HIGH GABIONS.
5. GABION SIZES ARE NOMINAL AND ARE 6-FEET NOMINAL LENGTH. ACTUAL SIZES ARE TO BE TO THE NEAREST 3 INCHES.
6. BACKFILL MATERIAL SHALL BE COMPRISED OF A WELL GRADED GRANULAR MATERIAL WITH A MAXIMUM PARTICLE SIZE OF 40MM, UNIFORMITY COEFFICIENT GRATER THAN 10 AND AT A MOISTURE CONTENT TO ENSURE A DENSE TABLE COMPACTED STATE.
7. GEOTEXTILE FABRIC SHALL BE INSTALLED BETWEEN GABIONS AND BACKFILL MATERIAL TO PREVENT LOSS OF FILL.

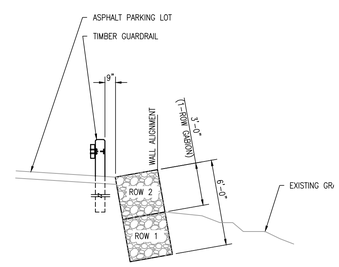

ROW 1: 3'-0"H x 3'-0"W
ROW 2: 3'-0"H x 3'-0"W

3 C360 GABION WALL SECTION
SCALE: 1"= 5'-0"

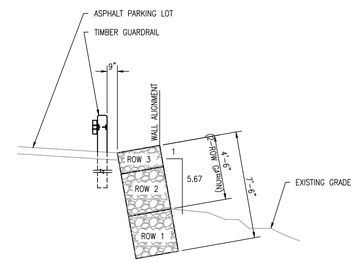

ROW 1: 3'-0"H x 3'-0"W
ROW 2: 3'-0"H x 3'-0"W
ROW 3: 1'-6"H x 3'-0"W

4 C360 GABION WALL SECTION
SCALE: 1"= 5'-0"

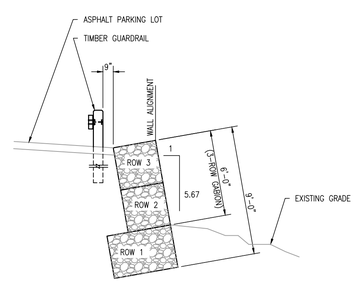

ROW 1: 3'-0"H x 6'-0"W
ROW 2: 3'-0"H x 4'-6"W
ROW 3: 3'-0"H x 3'-0"W
ROW 4: 3'-0"H x 3'-0"W

5 C360 GABION WALL SECTION
SCALE: 1"= 5'-0"

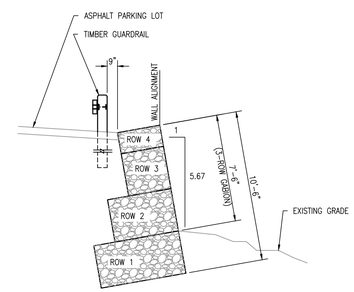

ROW 1: 3'-0"H x 6'-0"W
ROW 2: 3'-0"H x 4'-6"W
ROW 3: 3'-0"H x 3'-0"W
ROW 4: 3'-0"H x 3'-0"W

6 C360 GABION WALL SECTION
SCALE: 1"= 5'-0"

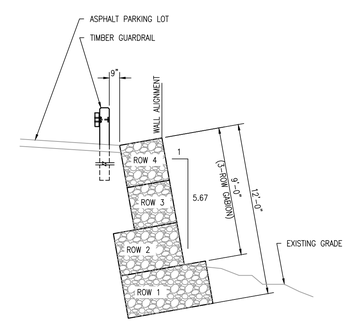

ROW 1: 3'-0"H x 6'-0"W
ROW 2: 3'-0"H x 4'-6"W
ROW 3: 3'-0"H x 3'-0"W
ROW 4: 3'-0"H x 3'-0"W

7 C360 GABION WALL SECTION
SCALE: 1"= 5'-0"

REVISIONS:

DATE:	DESCRIPTION:	BY:

AUBURN VALLEY STATE PARK
FARM LANE BRIDGE PHASE 2

WINGWALL I EXTENSION - PARKING LOT

SEAL:
WALTER J. HOEY III
REGISTERED
NO. 11204
DELAWARE
PROFESSIONAL ENGINEER
8/19/2021

CIVIL ENGINEER:
CENTURY ENGINEERING
CONSULTING ENGINEERS, SURVEYORS
550 S. BAY ROAD
DOVER, DELAWARE 19901

CONTRACT NO.: 175013.09

DELAWARE STATE PARKS
YOUR OUTDOOR ADVENTURE STARTS HERE

DESIGNED BY: WJH
DRAWN BY: ZTP/DLD
CHECKED BY: AES
DATE: AUGUST 2021
SCALE: AS SHOWN
SHEET NO.: C360
CONTRACT NO.: NAT21021-AVFARMLANE

G:\Projects\175013.00 (DAMIE 2017 Engineering IQC)\175013.09 (Farm Lane Bridge)\CADD FILES 2\SHEETS\CONSTRUCTION PLANS\C360 - WINGWALL1.dwg, 8/20/2021 10:14 AM

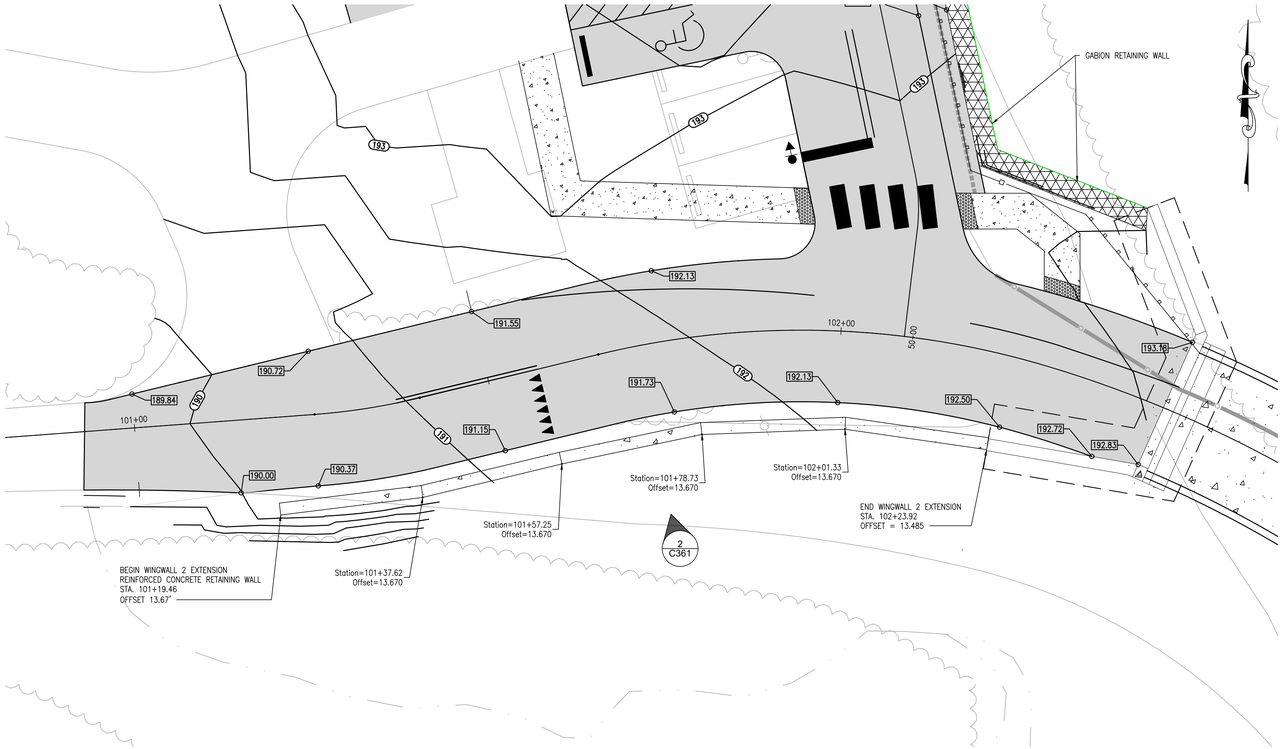

NOTES:
1. GUARDRAIL NOT SHOWN FOR CLARITY.

1 C361 WINGWALL II EXTENSION - PLAN
SCALE: 1"= 10'-0"

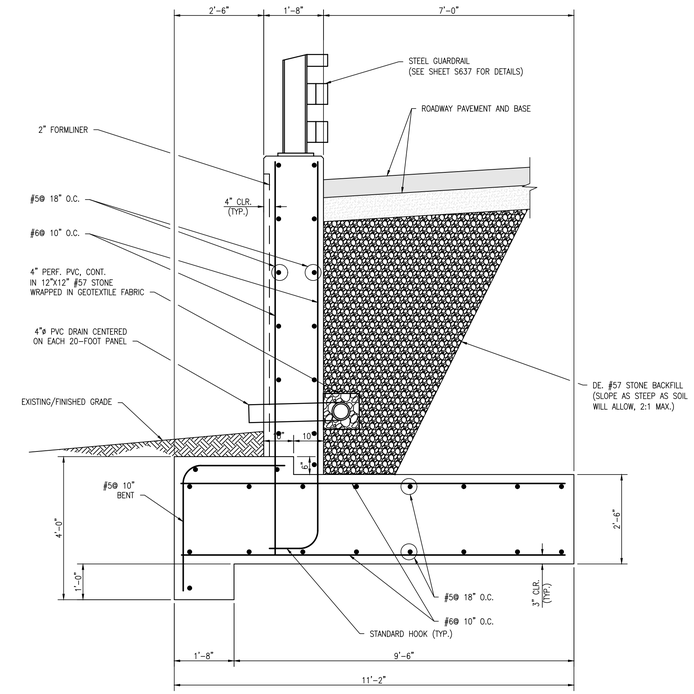

3 C361 WINGWALL II EXTENSION - RETAINING WALL, TYPICAL SECTION
SCALE: 1"= 2'-0"

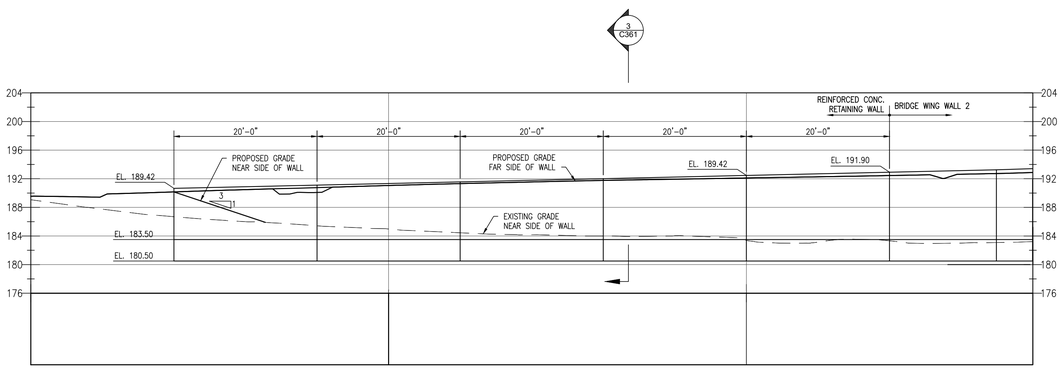

NOTES:
1. LAYOUT BASED ON FARM LANE ALIGNMENT STATIONING.
2. GUARDRAIL NOT SHOWN FOR CLARITY.

2 C361 WINGWALL II EXTENSION ELEVATION
SCALE: 1"= 10'-0"

REVISIONS:

DATE:	DESCRIPTION:	BY:

AUBURN VALLEY STATE PARK
FARM LANE BRIDGE PHASE 2

WINGWALL II EXTENSION

SEAL:
WALTER J. HOEY III
REGISTERED
NO. 11204
DELAWARE
PROFESSIONAL ENGINEER
8/19/2021

CIVIL ENGINEER:
CENTURY ENGINEERING
CONSULTING ENGINEERS, SURVEYORS
550 S. BAY ROAD
DOVER, DELAWARE 19901

CONTRACT NO.: 175013.09

DELAWARE STATE PARKS
YOUR OUTDOOR ADVENTURE STARTS HERE

DESIGNED BY: WJH
DRAWN BY: ZTP/DLD
CHECKED BY: AES
DATE: AUGUST 2021
SCALE: AS SHOWN
SHEET NO.: C361
CONTRACT NO.: NAT21021-AVFARMLANE

G:\Projects\175013.00 (DNREC 2017 Engineering QC)\175013.09 (Farm Lane Bridge)\CADD FILES Z\SHEETS\CONSTRUCTION PLANS\C361 - WINGWALL2.dwg, 8/20/2021 10:15 AM

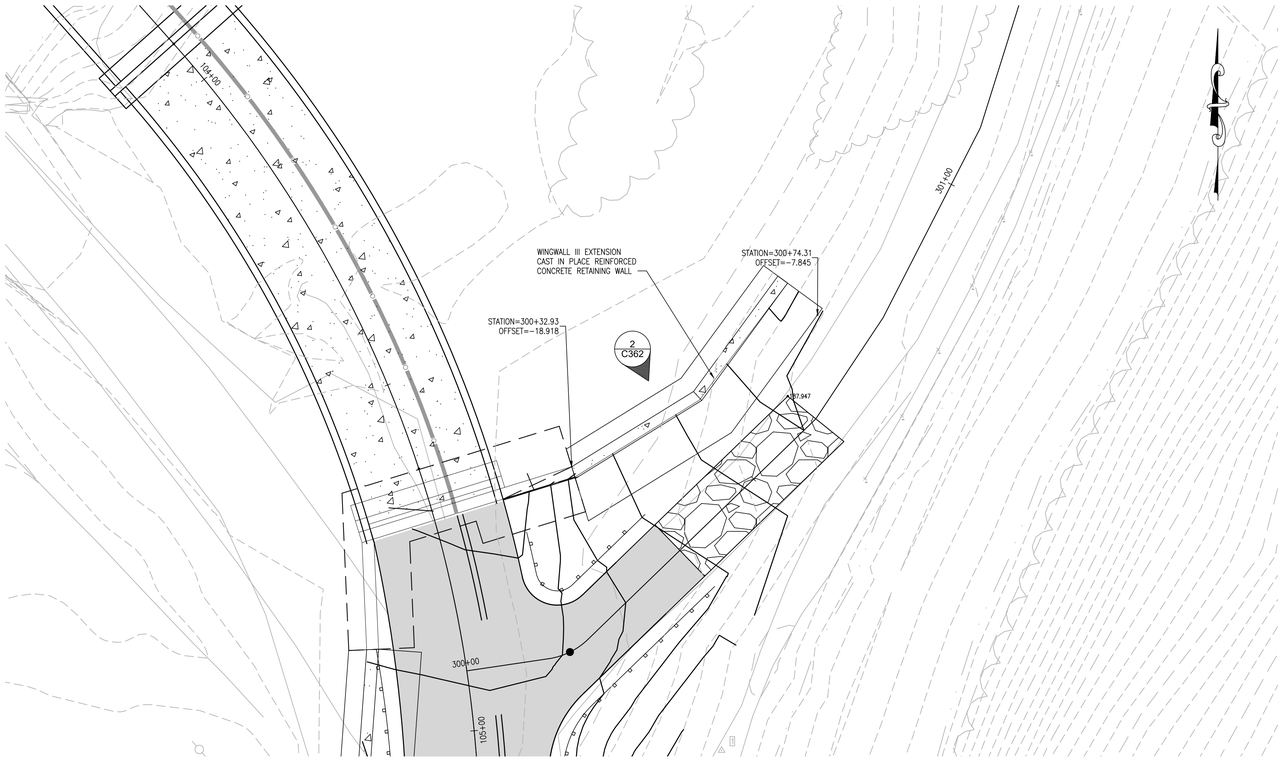

1 C362 WINGWALL III EXTENSION - PLAN
SCALE: 1"= 10'-0"

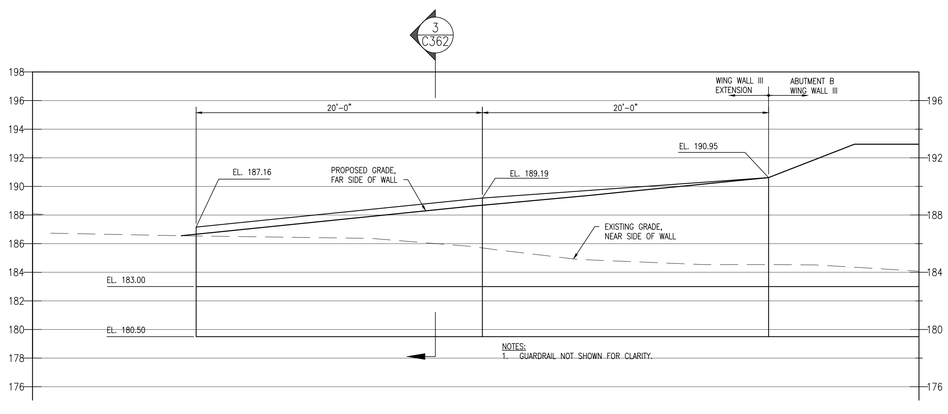

2 C362 WINGWALL III EXTENSION ELEVATION
SCALE: 1"= 5'-0"

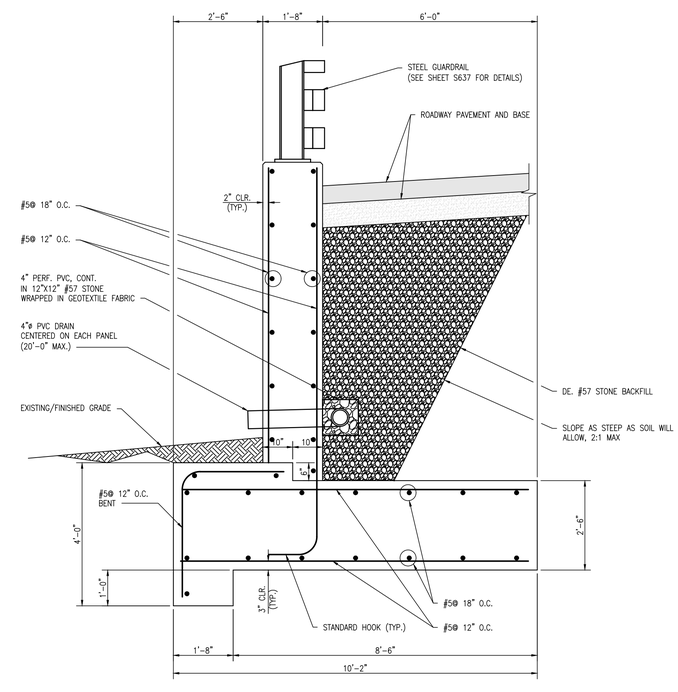

3 C362 WINGWALL III EXTENSION - RETAINING WALL, TYPICAL SECTION
SCALE: 1"= 2'-0"

REVISIONS:

DATE:	DESCRIPTION:	BY:

AUBURN VALLEY STATE PARK
FARM LANE BRIDGE PHASE 2

WINGWALL III EXTENSION

SEAL:
WALTER J. HOEY III
REGISTERED
NO. 11204
DELAWARE
PROFESSIONAL ENGINEER
8/19/2021

CIVIL ENGINEER:
CENTURY ENGINEERING
CONSULTING ENGINEERS, SURVEYORS
550 S. BAY ROAD
DOVER, DELAWARE 19901

CONTRACT NO.: 175013.09

DELAWARE STATE PARKS
YOUR OUTDOOR ADVENTURE STARTS HERE

DESIGNED BY: WJH
DRAWN BY: ZTP/DLD
CHECKED BY: AES
DATE: AUGUST 2021
SCALE: AS SHOWN
SHEET NO.: C362
CONTRACT NO.: NAT21021-AVFARMLANE

G:\Projects\175013.00 (DNREC 2017 Engineering IQC)\175013.09 (Farm Lane Bridge)\CADD FILES F\SHEETS\CONSTRUCTION PLANS\C362 - WINGWALL3.dwg, 8/20/2021 10:16 AM

1 C363 WINGWALL IV EXTENSION - PLAN
SCALE: 1"= 10'-0"

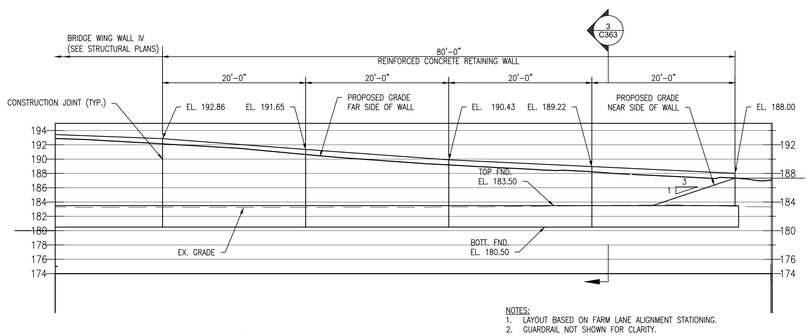

NOTES:
1. LAYOUT BASED ON FARM LANE ALIGNMENT STATIONING.
2. GUARDRAIL NOT SHOWN FOR CLARITY.

2 C363 WINGWALL IV EXTENSION ELEVATION
SCALE: 1"= 10'-0"

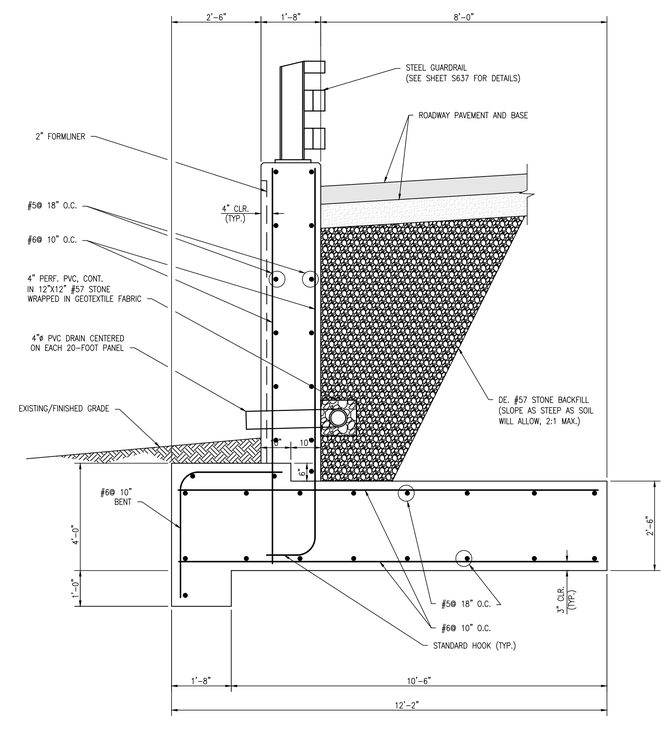

3 C363 WINGWALL IV EXTENSION - RETAINING WALL, TYPICAL SECTION
SCALE: 1"= 2'-0"

REVISIONS:

DATE:	DESCRIPTION:	BY:

AUBURN VALLEY STATE PARK
FARM LANE BRIDGE PHASE 2

WINGWALL IV EXTENSION

SEAL:
WALTER J. HOEY, III
REGISTERED
NO. 11204
DELAWARE
PROFESSIONAL ENGINEER
8/19/2021

CIVIL ENGINEER:
CENTURY ENGINEERING
CONSULTING ENGINEERS, SURVEYORS
550 S. BAY ROAD
DOVER, DELAWARE 19901

CONTRACT NO.: 175013.09

DELAWARE STATE PARKS
YOUR OUTDOOR ADVENTURE STARTS HERE

DESIGNED BY: WJH
DRAWN BY: ZTP/DLD
CHECKED BY: AES
DATE: AUGUST 2021
SCALE: AS SHOWN
SHEET NO.: C363
CONTRACT NO.: NAT21021-AVFARMLANE

G:\Projects\175013.00 (DNREC 2017 Engineering OE)\175013.09 (Farm Lane Bridge)\CADD FILES 2\SHEETS\CONSTRUCTION PLANS\C363 - WINGWALL4.dwg, 8/20/2021 10:17 AM

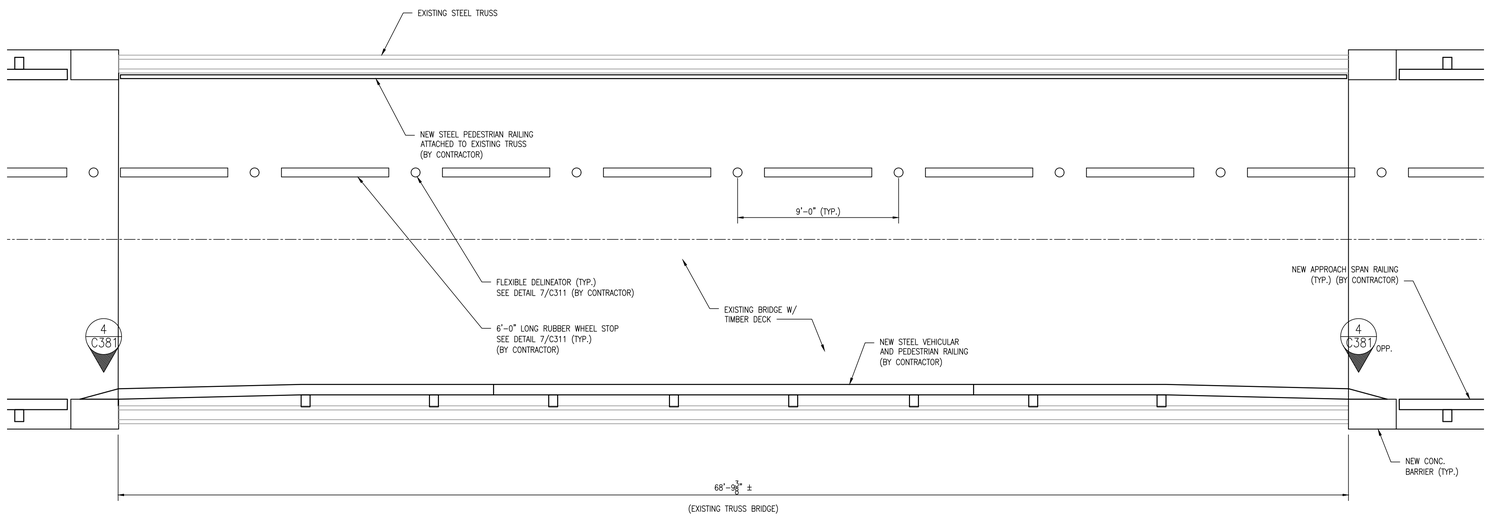

1 C380 TRUSS SPAN RAILING PLAN
SCALE: 1/4"= 1'-0"

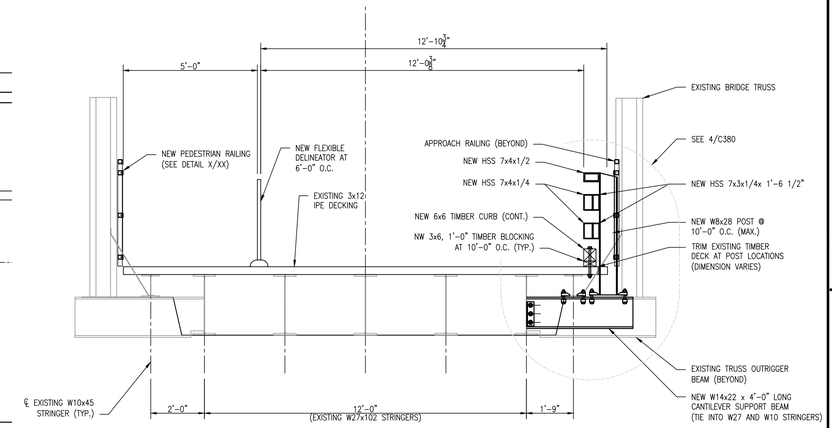

3 C380 GUARDRAIL - BRIDGE SECTION
SCALE: 3/8"= 1'-0"

NOTES:
1. DETAIL (3/C380) ELEMENTS IDENTIFIED AS "NEW" ARE TO BE SUPPLIED AND INSTALLED BY THE CONTRACTOR.
2. THE CONTRACTOR SHALL PAINT THE NEW W14x22 CANTILEVER SUPPORT BEAM GREEN TO MATCH THE EXISTING TRUSS BRIDGE.
3. THE CONTRACTOR SHALL PAINT THE NEW RAILING ELEMENTS BLACK.

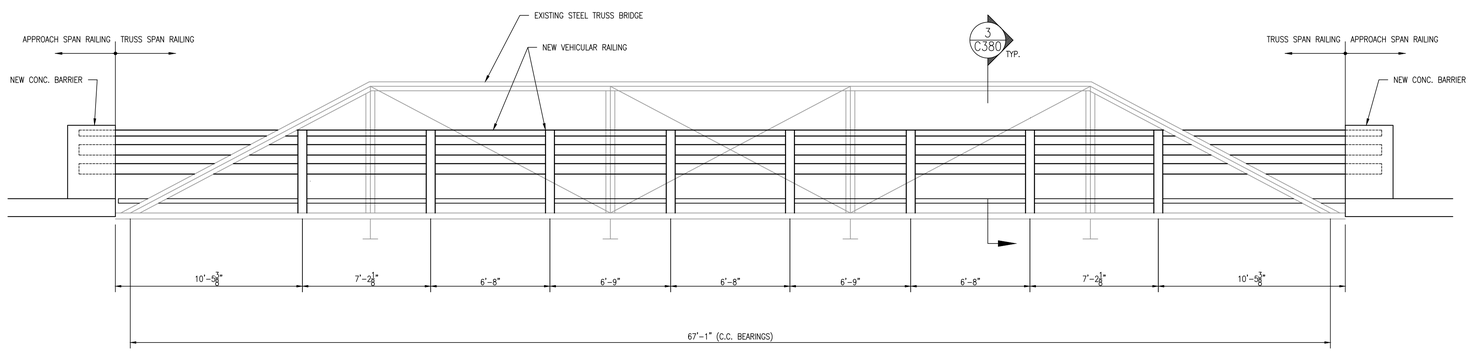

2 C380 TRUSS SPAN RAILING ELEVATION
SCALE: 1/4"= 1'-0"

NOTES:
1. APPROACH RAILINGS NOT SHOWN FOR CLARITY.
2. CONTRACTOR SHALL PROVIDE AND INSTALL VEHICULAR AND PEDESTRIAN RAILING, AND STRIPING AND REMOVABLE BOLLARDS ON THE EXISTING BRIDGE.

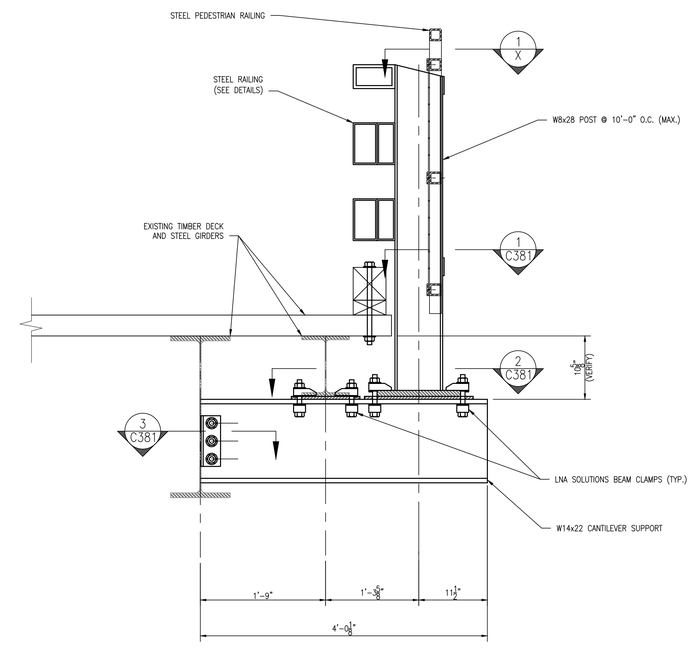

4 C380 GUARDRAIL - ATTACHMENT DETAIL
SCALE: 1"= 1'-0"

REVISIONS:

DATE:	DESCRIPTION:	BY:

AUBURN VALLEY STATE PARK
FARM LANE BRIDGE PHASE 2

BRIDGE RAILINGS

SEAL:
WALTER J. HOEY, III
REGISTERED
NO. 11204
DELAWARE
PROFESSIONAL ENGINEER
8/19/2021

CIVIL ENGINEER:
CENTURY ENGINEERING
CONSULTING ENGINEERS, SURVEYORS
550 S. BAY ROAD
DOVER, DELAWARE 19901

CONTRACT NO.: 175013.09

DELAWARE STATE PARKS
YOUR OUTDOOR ADVENTURE STARTS HERE

DESIGNED BY: WJH
DRAWN BY: ZTP/DLD
CHECKED BY: AES
DATE: AUGUST 2021
SCALE:
SHEET NO.: C380
CONTRACT NO.: NAT21021-AVFARMLANE

G:\Projects\175013.00 (DNREC 2017 Engineering IQ)\175013.09 (Farm Lane Bridge)\CAD FILES 2\SHEETS\CONSTRUCTION PLANS\C380 - BRIDGE RAILINGS.dwg, 8/20/2021 10:18 AM

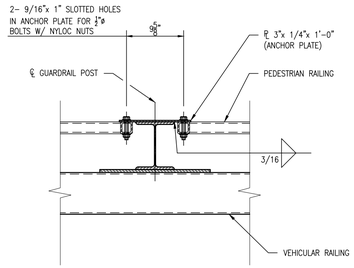

PLAN

NOTE:
REFER TO SHEET S637 FOR VEHICULAR RAILING DETAILS.

1 C381 GUARDRAIL - POST DETAIL
SCALE: 1"= 1'-0"

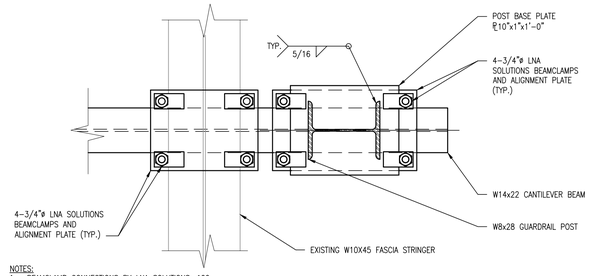

NOTES:
1. BEAMCLAMP CONNECTIONS BY LNA SOLUTIONS, 100 STRADTMAN STREET, BUFFALO, NY 14206, OR APPROVED EQUAL.
2. LNA SOLUTIONS ALIGNMENT PLATES TO BE SIZED BY MANUFACTURER. CONTRACTOR SHALL ADJUST ASSEMBLY AS REQUIRED.

PLAN

2 C381 GUARDRAIL TO CANTILEVER BEAM CONNECTION
SCALE: 1 1/2"= 1'-0"

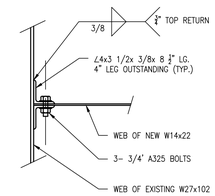

PLAN

3 C381 CANTILEVER BEAM TO STRINGER CONNECTION
SCALE: 1"= 1'-0"

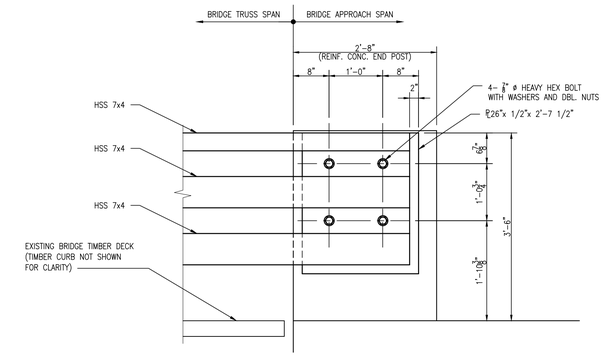

4 C381 GUARDRAIL BRIDGE CONNECTION
SCALE: 3/4"= 1'-0"

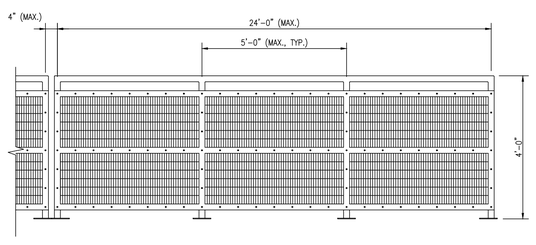

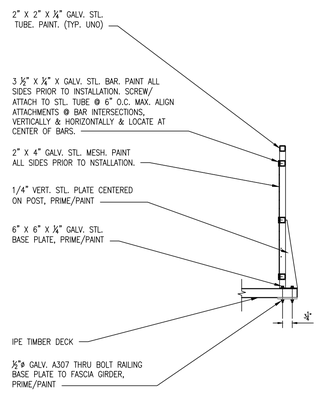

5 C381 PEDESTRIAN RAILING DETAIL
SCALE: 1/2"= 1'-0"

REVISIONS:

DATE:	DESCRIPTION:	BY:

AUBURN VALLEY STATE PARK
FARM LANE BRIDGE PHASE 2

RAILING CONNECTIONS

SEAL:
WALTER J. HOEFFILL
REGISTERED
NO. 11204
DELAWARE
PROFESSIONAL ENGINEER
8/19/2021

CIVIL ENGINEER:
CENTURY ENGINEERING
CONSULTING ENGINEERS, SURVEYORS
550 S. BAY ROAD
DOVER, DELAWARE 19901

CONTRACT NO.: 175013.09

DELAWARE STATE PARKS
YOUR OUTDOOR ADVENTURE STARTS HERE

DESIGNED BY: WJH
DRAWN BY: ZTP/DLD
CHECKED BY: AES
DATE: AUGUST 2021
SCALE:
SHEET NO.: C381
CONTRACT NO.: NAT21021-AVFARMLANE

G:\Projects\175013.00 (DNREC 2017 Engineering IQC)\175013.09 (Farm Lane Bridge)\CADD FILES Z\SHEETS\CONSTRUCTION PLANS\C381 - RAILING CONNECTIONS.dwg, 8/20/2021 10:18 AM

TEST BORING LOG — BORING B-1

CENTURY ENGINEERING

PROJECT : Farm Lane Bridge Replacement
CLIENT :
CONTRACTOR : Hynes & Associates

GROUNDWATER		DEPTH (ft) OF:			EQUIPMENT	CASING	SAMPLER	CORE
Date	Time	Water	Casing	Hole	Type:			
01/16/18	Drill	11			Size I.D.:			
					Hammer Wt.:			----
					Hammer Fall:			----

CONTRACT NO.: 175013.09
SHEET NO. : 1 of 1
STATION : 104+85
OFFSET : CL
ELEVATION : 184
DATE START : 1-16-18
END : 1-16-18
DRILLER : M. Hynes
INSPECTOR :

Depth in Feet	Strata Change	Case BPF (Drill) (min/ft)	Sampler Blows Per 6" (RQD%)	Sample Number	Type	Sample Depth Range (ft)	Sample Recov-ery (in)	Elev-ation/ Depth (ft)	FIELD CLASSIFICATION AND REMARKS
						0.0 1.5		183.0 1.0	Topsoil (12")
			2-2-3-4					181.5 2.5	Brown moist clayey SILT, with little f-m sand (ML)
			1-2-3			3.0 4.5			Brown moist silty CLAY, with trace f-m SAND (micaceous) (CL)
5								178.5 5.5	Brown moist Silty fine SAND, trace Clay (micaceous) (SM)
			1-2-4			6.0 7.5			
10			2-13-14			9.0 10.5		174.0 10.0	Gray moist f-m SAND, with some Silt (decomposed rock) (SM)
								172.0 12.0	Brown wet clayey SILT, with little f-m SAND (micaceous) (ML)
15			31-23-22			14.0 15.5			
								167.0 17.0	Dark Brown wet f-m SAND, with some silt (decomposed rock) (SM)
20			14-22-30			19.0 20.5			
			50/1			24.0		159.0	
25			69%			24.1 25.0 30.0	60"	25.0	Gray GNEISS Bedrock, fine-med. grained (%Rec.=100%, RQD=69%)
30								154.0 30.0	Bottom of Boring @ 30.0 Ft.

BLOWS/FT.	DENSITY	BLOWS/FT.	CONSISTENCY	SAMPLE IDENTIFICATION	SUMMARY
0-5 Very Loose; 6-10 Loose; 11-30 Medium Dense; 31-50 Dense; 51+ Very Dense		0-3 Very Soft; 4-5 Soft; 6-10 Medium Stiff; 11-15 Stiff; 16-30 Very Stiff; 31+ Hard		- S - Split Spoon; - T - Thin Wall Tube; - U - Undisturbed Piston; - C - Diamond Core; - W - Wash Sample; - See Remarks	Overburden: Rock: Samples:

BORING B-1

Aug 11, 21

TEST BORING LOG — BORING B-2

CENTURY ENGINEERING

PROJECT : Farm Lane Bridge Replacement
CLIENT :
CONTRACTOR : Hynes & Associates

GROUNDWATER		DEPTH (ft) OF:			EQUIPMENT	CASING	SAMPLER	CORE
Date	Time	Water	Casing	Hole	Type:			
01/15/18	Drill	12			Size I.D.:			
					Hammer Wt.:			----
					Hammer Fall:			----

CONTRACT NO.: 175013.09
SHEET NO. : 1 of 1
STATION : 104+07
OFFSET : CL
ELEVATION : 181
DATE START : 1-15-18
END : 1-15-18
DRILLER : M. Hynes
INSPECTOR :

Depth in Feet	Strata Change	Case BPF (Drill) (min/ft)	Sampler Blows Per 6" (RQD%)	Sample Number	Type	Sample Depth Range (ft)	Sample Recov-ery (in)	Elev-ation/ Depth (ft)	FIELD CLASSIFICATION AND REMARKS
								180.5 0.5	Topsoil (6")
			2-2-2-3			0.0 1.5			Brown moist clayey SILT, with trace f-m sand (ML)
								178.5 2.5	Brown moist clayey SILT, with little fine sand (micaceous) (ML)
			1-2-3			3.0 4.5			
5								175.5 5.5	Brown wet f-e SAND, trace Silt and weathered rock fragments (SP-SM)
			1-4-10			6.0 7.5			
10			21-40-50/4			9.0 10.3			
15			12-21-33			14.0 15.5			
20			24-13-23			19.0 20.5			
			50/1			24.0			
25			53%			24.1 25.0 30.0	56"	156.0 25.0	Gray GNEISS Bedrock, fine-med. grained (Rec=93%, RQD=53%)
30								151.0 30.0	Bottom of Boring @ 30.0 Ft.

BLOWS/FT.	DENSITY	BLOWS/FT.	CONSISTENCY	SAMPLE IDENTIFICATION	SUMMARY
0-5 Very Loose; 6-10 Loose; 11-30 Medium Dense; 31-50 Dense; 51+ Very Dense		0-3 Very Soft; 4-5 Soft; 6-10 Medium Stiff; 11-15 Stiff; 16-30 Very Stiff; 31+ Hard		- S - Split Spoon; - T - Thin Wall Tube; - U - Undisturbed Piston; - C - Diamond Core; - W - Wash Sample; - See Remarks	Overburden: Rock: Samples:

BORING B-2

May 18, 21

TEST BORING LOG — BORING B-3

CENTURY ENGINEERING

PROJECT : Farm Lane Bridge Replacement
CLIENT :
CONTRACTOR : Hynes & Associates

GROUNDWATER		DEPTH (ft) OF:			EQUIPMENT	CASING	SAMPLER	CORE
Date	Time	Water	Casing	Hole	Type:			
01/17/18	Drill	8			Size I.D.:			
					Hammer Wt.:			----
					Hammer Fall:			----

CONTRACT NO.: 175013.09
SHEET NO. : 1 of 1
STATION : 103+33
OFFSET : CL
ELEVATION : 182
DATE START : 1-17-18
END : 1-17-18
DRILLER : M. Hynes
INSPECTOR :

Depth in Feet	Strata Change	Case BPF (Drill) (min/ft)	Sampler Blows Per 6" (RQD%)	Sample Number	Type	Sample Depth Range (ft)	Sample Recov-ery (in)	Elev-ation/ Depth (ft)	FIELD CLASSIFICATION AND REMARKS
						0.0 1.5		181.0 1.0	Topsoil (12")
			1-2-2-3						Brown moist clayey SILT, with little f-m sand (ML)
			2-4-4			3.0 4.5		176.5 5.5	Brown moist to wet f-c SAND, with little silt, some weathered rock fragments (decomposed rock) (SP-SM)
5									
			3-16-20			6.0 7.5			
10			3-21-16			9.0 10.5		170.0 12.0	Dark Brown moist clayey SILT, with little f-m sand (decomposed rock) (ML)
15			9-11-16			14.0 15.5			
20			50/5			19.0 19.4		161.0 21.0	Gray GNEISS Bedrock, fine.-med. grained (Rec=88%, RQD=69%)
			69%			21.0 26.0	53"		
25								156.0 26.0	Bottom of Boring @ 26.0 Ft.
30									

BLOWS/FT.	DENSITY	BLOWS/FT.	CONSISTENCY	SAMPLE IDENTIFICATION	SUMMARY
0-5 Very Loose; 6-10 Loose; 11-30 Medium Dense; 31-50 Dense; 51+ Very Dense		0-3 Very Soft; 4-5 Soft; 6-10 Medium Stiff; 11-15 Stiff; 16-30 Very Stiff; 31+ Hard		- S - Split Spoon; - T - Thin Wall Tube; - U - Undisturbed Piston; - C - Diamond Core; - W - Wash Sample; - See Remarks	Overburden: Rock: Samples:

BORING B-3

May 18, 21

TEST BORING LOG — BORING B-4

CENTURY ENGINEERING

PROJECT : Farm Lane Bridge Replacement
CLIENT :
CONTRACTOR : Hynes & Associates

GROUNDWATER		DEPTH (ft) OF:			EQUIPMENT	CASING	SAMPLER	CORE
Date	Time	Water	Casing	Hole	Type:			
01/22/18	Drill	8			Size I.D.:			
01/22/18	Completion	6.5			Hammer Wt.:			----
					Hammer Fall:			----

CONTRACT NO.: 175013.09
SHEET NO. : 1 of 1
STATION : 102+65
OFFSET : CL
ELEVATION : 183
DATE START : 1-22-18
END : 1-22-18
DRILLER : M. Hynes
INSPECTOR :

Depth in Feet	Strata Change	Case BPF (Drill) (min/ft)	Sampler Blows Per 6" (RQD%)	Sample Number	Type	Sample Depth Range (ft)	Sample Recov-ery (in)	Elev-ation/ Depth (ft)	FIELD CLASSIFICATION AND REMARKS
						0.0 1.5		182.0 1.0	Topsoil (12")
			2-2-2-4					180.5 2.5	Brown moist clayey SILT, with little f-m sand (ML)
			1-2-3			3.0 4.5			Brown moist clayey SILT, with little f-m sand (micaceous) (ML)
5								177.5 5.5	Brown moist f-m SAND, with some Silt (SM)
			1-2-4			6.0 7.5			
10			8-11-17			9.0 10.5		174.5 8.5	Dark Brown wet f-m SAND, trace Silt and Clay (SP-SM)
								171.0 12.0	Brown wet f-m SAND, with some silt (SM)
15			4-8-16			14.0 15.5			
20			8-31-46			19.0 20.5			
						24.0		159.0 24.0	Gray GNEISS Bedrock, fine-med. grained (Rec=71%, RQD=69%)
25			69%			24.0 29.0	43"		
30								153.0 30.0	Bottom of Boring @ 30.0 Ft.

BLOWS/FT.	DENSITY	BLOWS/FT.	CONSISTENCY	SAMPLE IDENTIFICATION	SUMMARY
0-5 Very Loose; 6-10 Loose; 11-30 Medium Dense; 31-50 Dense; 51+ Very Dense		0-3 Very Soft; 4-5 Soft; 6-10 Medium Stiff; 11-15 Stiff; 16-30 Very Stiff; 31+ Hard		- S - Split Spoon; - T - Thin Wall Tube; - U - Undisturbed Piston; - C - Diamond Core; - W - Wash Sample; - See Remarks	Overburden: Rock: Samples:

BORING B-4

May 18, 21

TEST BORING LOG — BORING

CENTURY ENGINEERING

PROJECT : Farm Lane Bridge Replacement
CLIENT :
CONTRACTOR : Hynes & Associates

GROUNDWATER		DEPTH (ft) OF:			EQUIPMENT	CASING	SAMPLER	CORE
Date	Time	Water	Casing	Hole	Type:			
5/30/12		5.5			Size I.D.:			
					Hammer Wt.:			----
					Hammer Fall:			----

CONTRACT NO.: 175013.09
SHEET NO. : 1 of 1
STATION :
OFFSET :
ELEVATION : 182
DATE START :
END :
DRILLER :
INSPECTOR :

Depth in Feet	Strata Change	Case BPF (Drill) (min/ft)	Sampler Blows Per 6" (RQD%)	Sample Number	Type	Sample Depth Range (ft)	Sample Recov-ery (in)	Elev-ation/ Depth (ft)	FIELD CLASSIFICATION AND REMARKS
			4-11-10-10			0.0 2.0		181.8 0.2	
5			2-17-6-4			5.0 7.0		177.0 5.0	
			2-2-16-22			7.0 9.0		175.0 7.0	
10			38-42-42-12			9.0 11.0		173.0 9.0	
			0%			11.0 15.0	0"	171.0 11.0	
15			0%			13.0 18.0	6"	167.0 15.0	
20			0%			18.0 23.0	2"		
			0%			19.0 23.5	0"	162.0 20.0	
25								157.0 25.0	
30								152.5 29.5	

BLOWS/FT.	DENSITY	BLOWS/FT.	CONSISTENCY	SAMPLE IDENTIFICATION	SUMMARY
0-5 Very Loose; 6-10 Loose; 11-30 Medium Dense; 31-50 Dense; 51+ Very Dense		0-3 Very Soft; 4-5 Soft; 6-10 Medium Stiff; 11-15 Stiff; 16-30 Very Stiff; 31+ Hard		- S - Split Spoon; - T - Thin Wall Tube; - U - Undisturbed Piston; - C - Diamond Core; - W - Wash Sample; - See Remarks	Overburden: Rock: Samples:

BORING S-B-1

May 18, 21

TEST BORING LOG — BORING

CENTURY ENGINEERING

PROJECT : Farm Lane Bridge Replacement
CLIENT :
CONTRACTOR : Hynes & Associates

GROUNDWATER		DEPTH (ft) OF:			EQUIPMENT	CASING	SAMPLER	CORE
Date	Time	Water	Casing	Hole	Type:			
5/30/12					Size I.D.:			
					Hammer Wt.:			----
					Hammer Fall:			----

CONTRACT NO.: 175013.09
SHEET NO. : 1 of 1
STATION :
OFFSET :
ELEVATION : 183
DATE START :
END :
DRILLER :
INSPECTOR :

Depth in Feet	Strata Change	Case BPF (Drill) (min/ft)	Sampler Blows Per 6" (RQD%)	Sample Number	Type	Sample Depth Range (ft)	Sample Recov-ery (in)	Elev-ation/ Depth (ft)	FIELD CLASSIFICATION AND REMARKS
			8-6-3-10			0.0 2.0		182.5 0.5	
5			4-5-8-20			5.0 7.0		178.0 5.0	
			3-15-23-23			7.0 9.0			
10			17-19-22-26			9.0 11.0		172.0 11.0	
			23-37-23-24			11.0 13.0			
15			22-51			13.0 14.0			
20			50/3			18.0		164.0 19.0	
			25%			18.8 19.0 23.0	26"	160.0 23.0	
25									
30									

BLOWS/FT.	DENSITY	BLOWS/FT.	CONSISTENCY	SAMPLE IDENTIFICATION	SUMMARY
0-5 Very Loose; 6-10 Loose; 11-30 Medium Dense; 31-50 Dense; 51+ Very Dense		0-3 Very Soft; 4-5 Soft; 6-10 Medium Stiff; 11-15 Stiff; 16-30 Very Stiff; 31+ Hard		- S - Split Spoon; - T - Thin Wall Tube; - U - Undisturbed Piston; - C - Diamond Core; - W - Wash Sample; - See Remarks	Overburden: Rock: Samples:

BORING S-B-2

May 18, 21

REVISIONS:
DATE: DESCRIPTION: BY:

AUBURN VALLEY STATE PARK
FARM LANE BRIDGE PHASE 2
BORING LOGS

SEAL: WALTER J. HOEY III REGISTERED NO. 11204 DELAWARE PROFESSIONAL ENGINEER 8/19/2021

CIVIL ENGINEER:
CENTURY ENGINEERING
CONSULTING ENGINEERS, SURVEYORS
550 S. BAY ROAD
DOVER, DELAWARE 19901

CONTRACT NO.: 175013.09

DELAWARE STATE PARKS — YOUR OUTDOOR ADVENTURE STARTS HERE

DESIGNED BY: WJH
DRAWN BY: ZTP/DLD
CHECKED BY: AES
DATE: AUGUST 2021
SCALE: AS SHOWN
SHEET NO.: C400
CONTRACT NO.: NAT21021-AVFARMLANE

G:\Projects\175013.00 (DNREC 2017 Engineering IQC)\175013.09 (Farm Lane Bridge)\CADD FILES Z:\SHEETS\CONSTRUCTION PLANS\C400 - BORING LOGS.dwg, 8/20/2021 10:18 AM

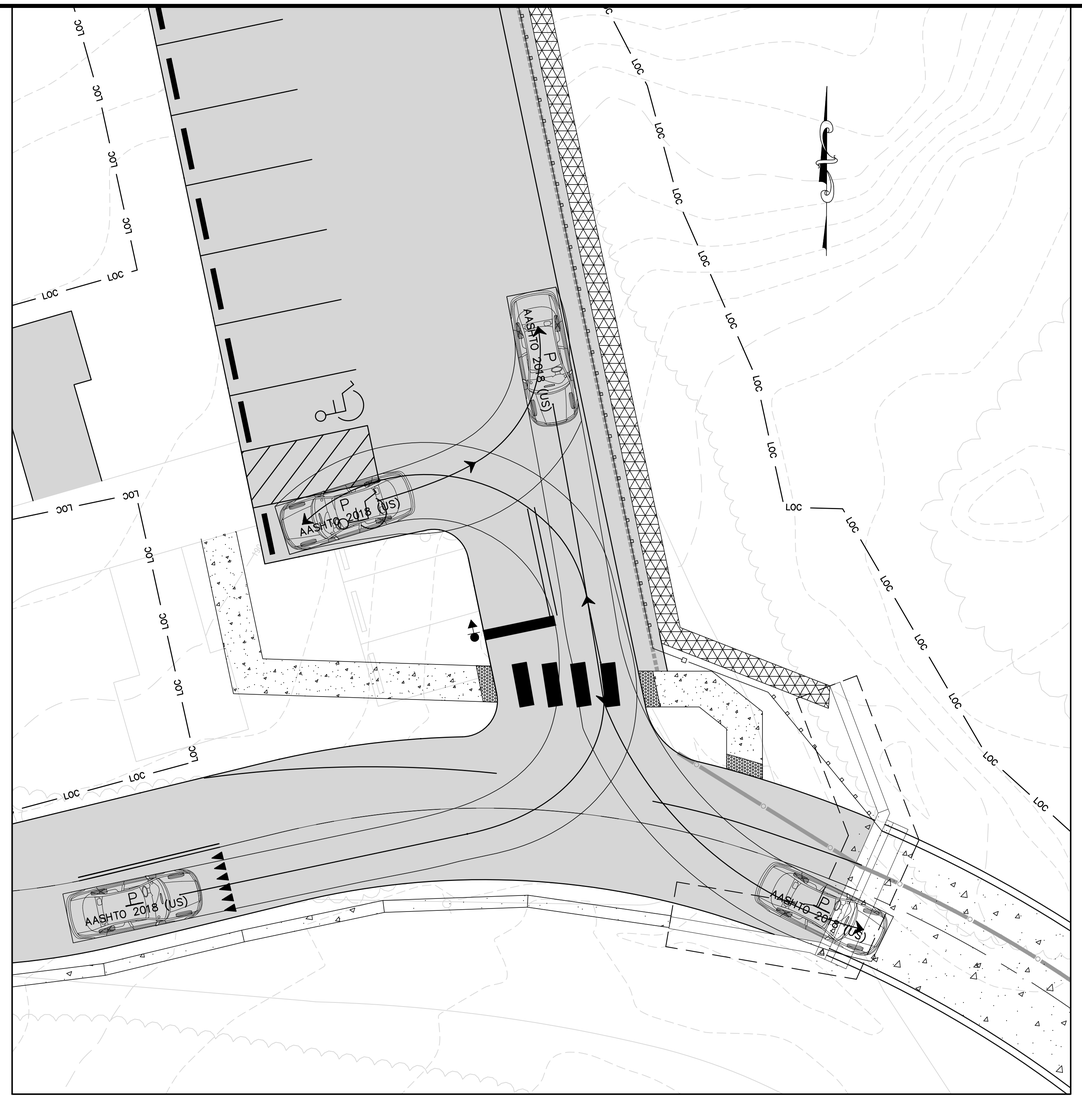

TURNING TEMPLATE: P CAR ENTERING FROM FARM LANE BRIDGE APPROACH AND EXITING RIGHT

SCALE: 1" = 10'

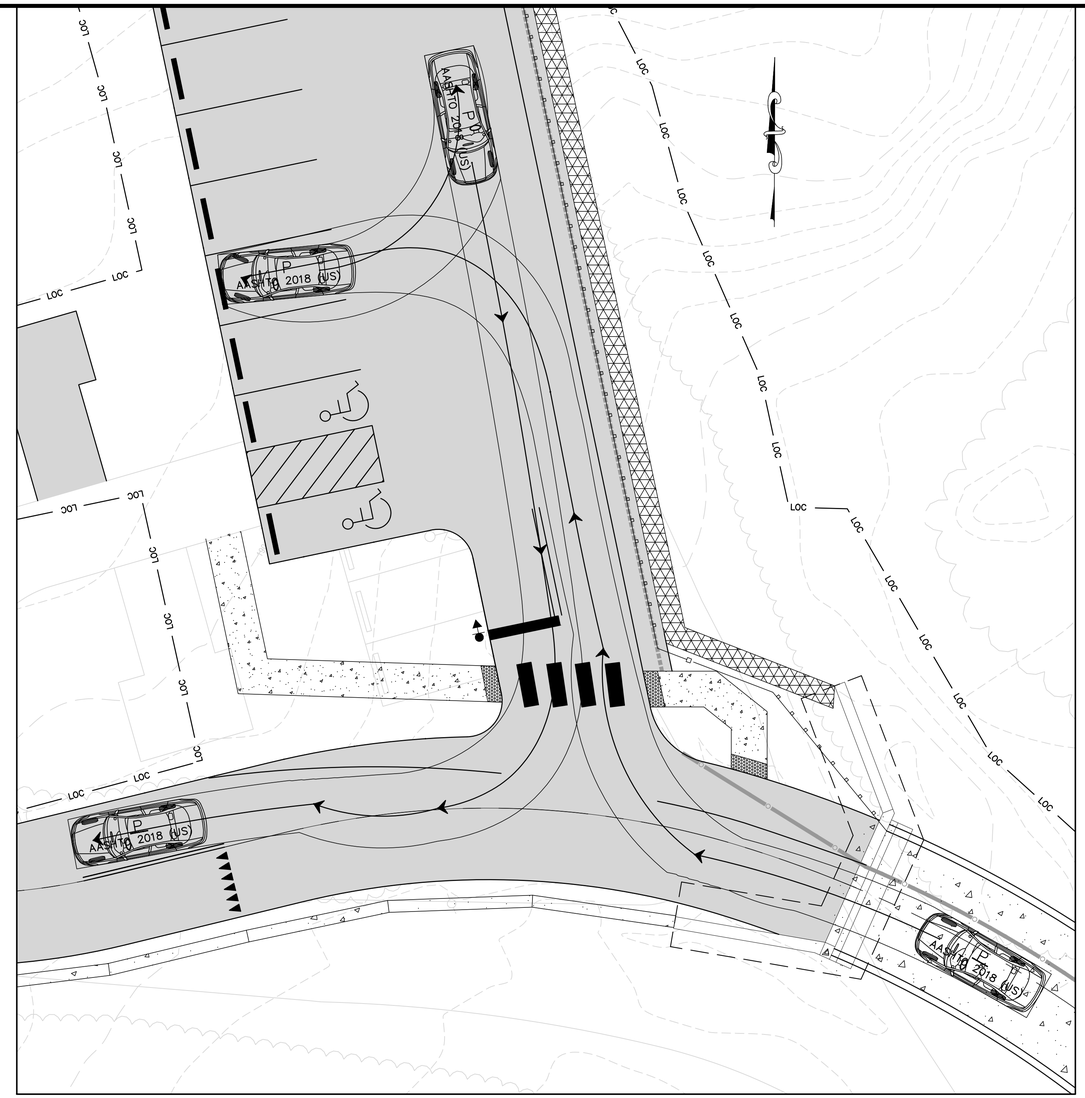

TURNING TEMPLATE: P ENTERING FROM WESTERN APPROACH AND EXITING LEFT

SCALE: 1" = 10'

0' 10' 20' 30'

SCALE: 1" = 10'

REVISIONS:

DATE:	DESCRIPTION:	BY:

AUBURN VALLEY STATE PARK
FARM LANE BRIDGE PHASE 2

TURNING TEMPLATE PLAN - 1

SEAL:

WALTER J. HOEY, III
REGISTERED
NO. 11204
DELAWARE
PROFESSIONAL ENGINEER

8/19/2021

CIVIL ENGINEER:

CENTURY ENGINEERING
CONSULTING ENGINEERS, SURVEYORS
550 S. BAY ROAD
DOVER, DELAWARE 19901

CONTRACT NO.: 175013.09

DELAWARE STATE PARKS
YOUR OUTDOOR ADVENTURE STARTS HERE

DESIGNED BY: WJH

DRAWN BY: ZTP/DLD

CHECKED BY: AES

DATE: AUGUST 2021

SCALE: 1" = 10'

SHEET NO.: TT100

CONTRACT NO.: NAT21021-AVFARMLANE

G:\Projects\175013.00 (DNREC 2017 Engineering 0Q)\175013.09 (Farm Lane Bridge)\CADD FILES 2\SHEETS\CONSTRUCTION PLANS\TT100 TURNING TEMPLATE PLAN.dwg, 8/20/2021 10:19 AM

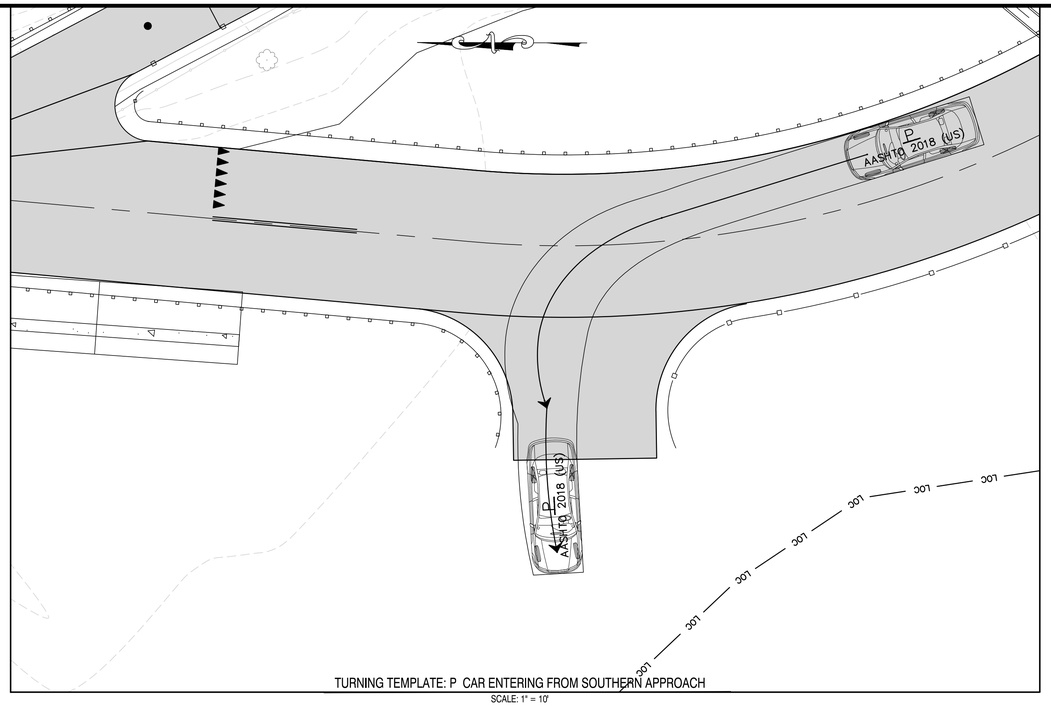

TURNING TEMPLATE: P CAR ENTERING FROM SOUTHERN APPROACH

SCALE: 1" = 10'

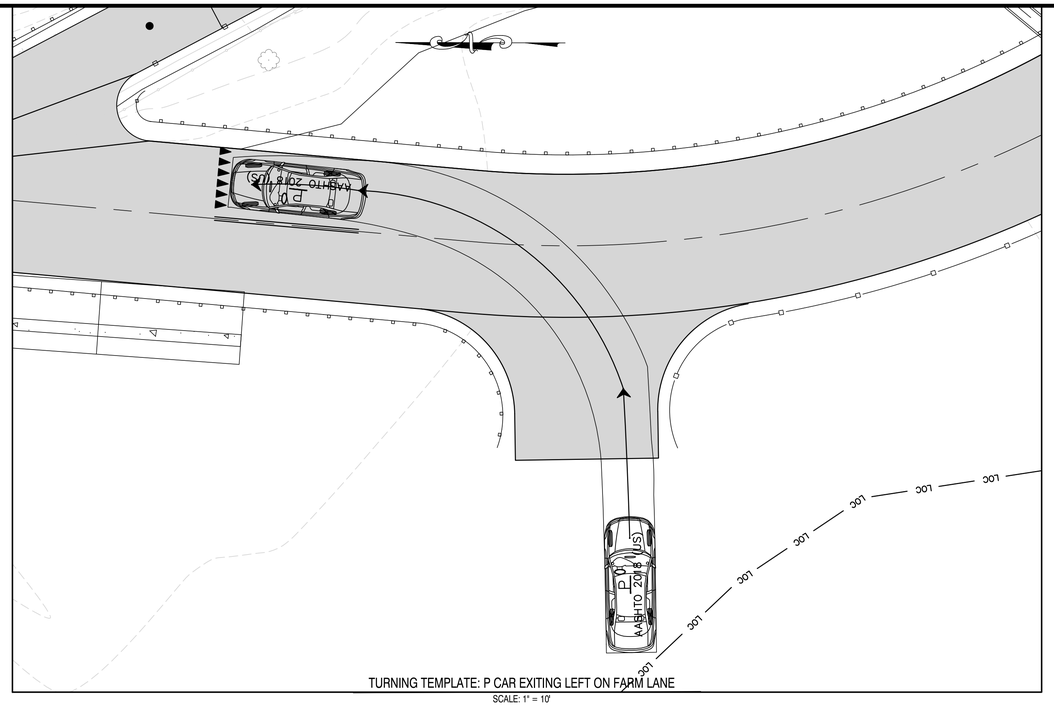

TURNING TEMPLATE: P CAR EXITING LEFT ON FARM LANE

SCALE: 1" = 10'

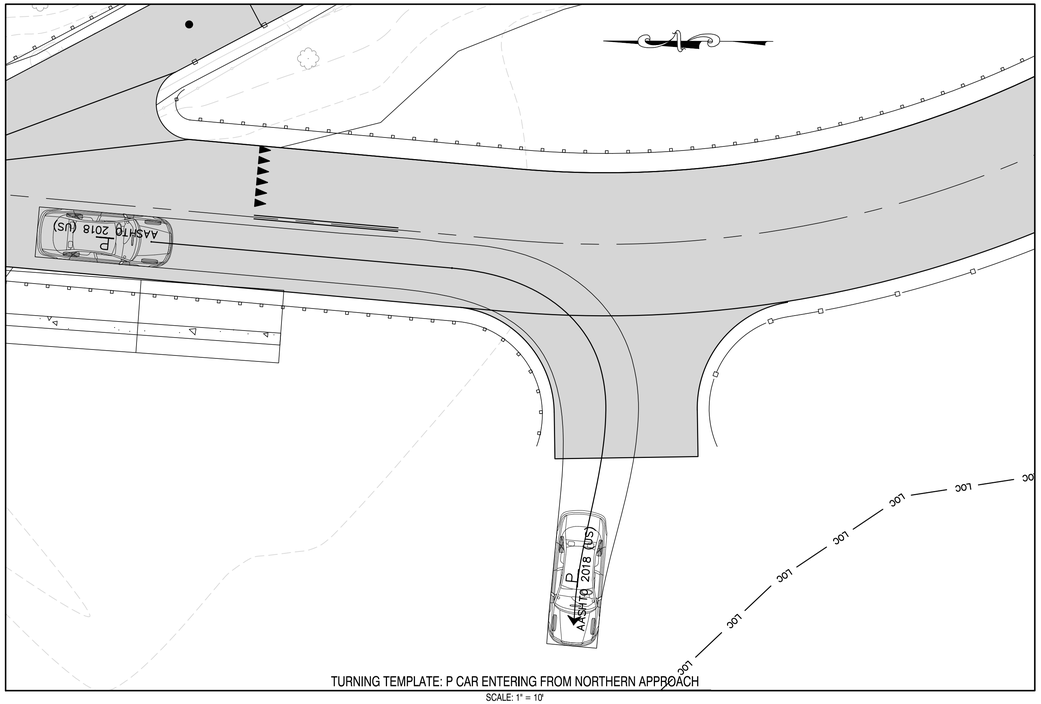

TURNING TEMPLATE: P CAR ENTERING FROM NORTHERN APPROACH

SCALE: 1" = 10'

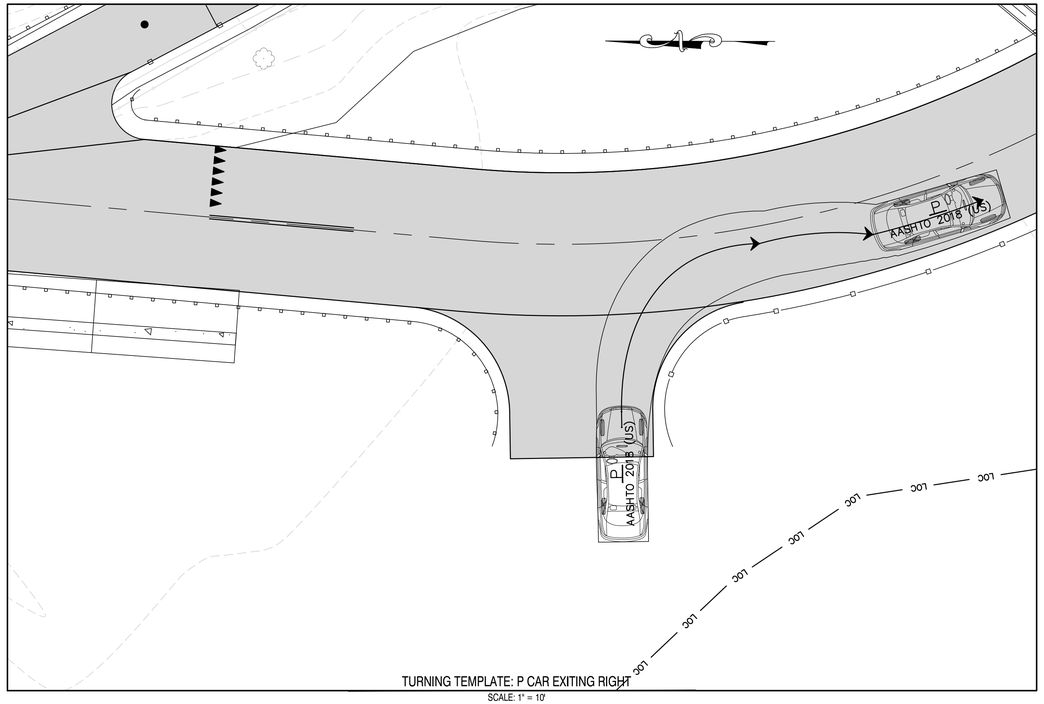

TURNING TEMPLATE: P CAR EXITING RIGHT

SCALE: 1" = 10'

0' 10' 20' 30'

SCALE: 1" = 10'

REVISIONS:

DATE:	DESCRIPTION:	BY:

AUBURN VALLEY STATE PARK
FARM LANE BRIDGE PHASE 2

TURNING TEMPLATE PLAN - 2

SEAL:

WALTER J. HOEY, III
REGISTERED
NO. 11204
DELAWARE
PROFESSIONAL ENGINEER

8/19/2021

CIVIL ENGINEER:

CENTURY ENGINEERING
CONSULTING ENGINEERS, SURVEYORS
550 S. BAY ROAD
DOVER, DELAWARE 19901

CONTRACT NO.: 175013.09

DELAWARE STATE PARKS
YOUR OUTDOOR ADVENTURE STARTS HERE

DESIGNED BY: WJH

DRAWN BY: ZTP/DLD

CHECKED BY: AES

DATE: AUGUST 2021

SCALE: 1" = 10'

SHEET NO.: TT101

CONTRACT NO.: NAT21021-AVFARMLANE

G:\Projects\175013.00 (DNREC 2017 Engineering OE)\175013.09 (Farm Lane Bridge)\CADD FILES 2\SHEETS\CONSTRUCTION PLANS\TT101 TURNING TEMPLATE PLAN.dwg, 8/20/2021 10:19 AM

STATE OF DELAWARE
DEPARTMENT OF NATURAL RESOURCES AND ENVIRONMENTAL CONTROL
DIVISION OF PARKS AND RECREATION

AUBURN VALLEY STATE PARK
FARM LANE BRIDGE PHASE 2

EROSION AND SEDIMENT CONTROL PLAN

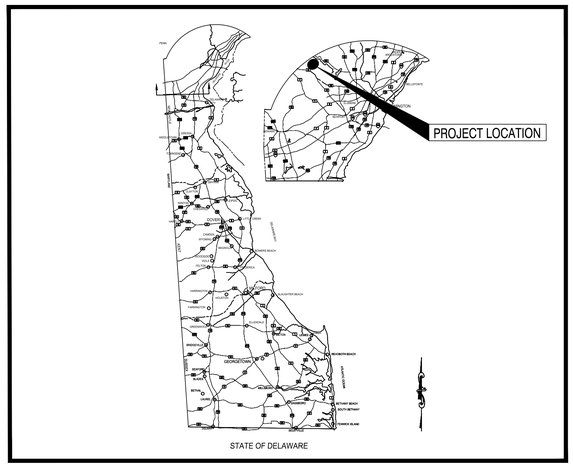

LOCATION MAP

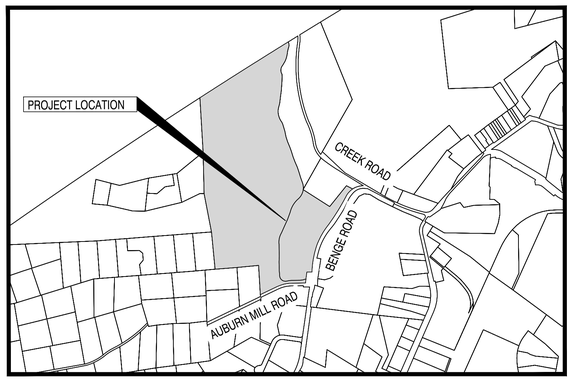

SITE MAP

DELAWARE STATE PARKS
YOUR OUTDOOR ADVENTURE STARTS HERE

PROJECT NO. NAT21021-AVFFARMLANE
AUGUST 2021

INDEX OF SHEETS FOR PROJECT NO.
NAT21021-AVFARMLANE

SHEET NO.:	TITLE
ES500	ES500 - EROSION AND SEDIMENT CONTROL COVER SHEET
ES501	PRE-DEVELOPMENT EROSION AND SEDIMENT CONTROL PLAN
ES502	POST-DEVELOPMENT EROSION AND SEDIMENT CONTROL PLAN
ES503	EROSION AND SEDIMENT CONTROL DETAILS
ES504	EROSION AND SEDIMENT CONTROL DETAILS
ES505	EROSION AND SEDIMENT CONTROL DETAILS
ES506	EROSION AND SEDIMENT CONTROL DETAILS

This drawing is the property of Century Engineering, Inc. and is prepared for the exclusive use of its clients at the location indicated. No other use is authorized or intended.

CENTURY ENGINEERING
CONSULTING ENGINEERS ■ SURVEYORS
ADDRESS: 550 BAY ROAD DOVER, DE 19901
P: (302) 734-9188 F: (302) 734-6589
WEBSITE: www.centuryeng.com
EMAIL: cei@centuryeng.com

REVISIONS

WALTER J. HOEY, III
REGISTERED
NO. 11204
DELAWARE
PROFESSIONAL ENGINEER
8/19/2021

ADDENDUM

DESCRIPTION	DATE

PROJECT
EROSION AND SEDIMENT CONTROL PLANS
FOR
AUBURN VALLEY STATE PARK
FARM LANE BRIDGE PHASE 2
CHRISTIANA HUNDRED
NEW CASTLE COUNTY, DELAWARE

SHEET TITLE
EROSION AND SEDIMENT CONTROL COVER SHEET

CIVIL ENGINEER
PREPARED BY:
CENTURY ENGINEERING
CONSULTING ENGINEERS, SURVEYORS
550 BAY RD. DOVER, DELAWARE 19901 (302) 734-9188
SIGNATURE DATE

Seal

CLIENT
OFFICE OF DESIGN & DEVELOPMENT
DELAWARE DIVISION OF PARKS & RECREATION
89 KINGS HIGHWAY
DOVER, DELAWARE 19901
(302) 739-9231
(302) 739-7026 (FAX)
SIGNATURE DATE

DNREC, DIVISION OF WATERSHED STEWARDSHIP
August 2021

DRAWN	CHK'D/DESIGNER
ARC/ZTP	AES
SCALE	SHEET NO.
N.T.S	ES500

PROJECT NO.
175013.09

G:\Projects\175013.09 (DNREC 2017 Engineering GS)\175013.09 (Farm Lane Bridge)\CADD FILES 3\SHEETS\EROSION AND SEDIMENT CONTROL PLANS\ES500_-EroslonandSedimentControlCover.dwg, 8/20/2021 11:45 AM

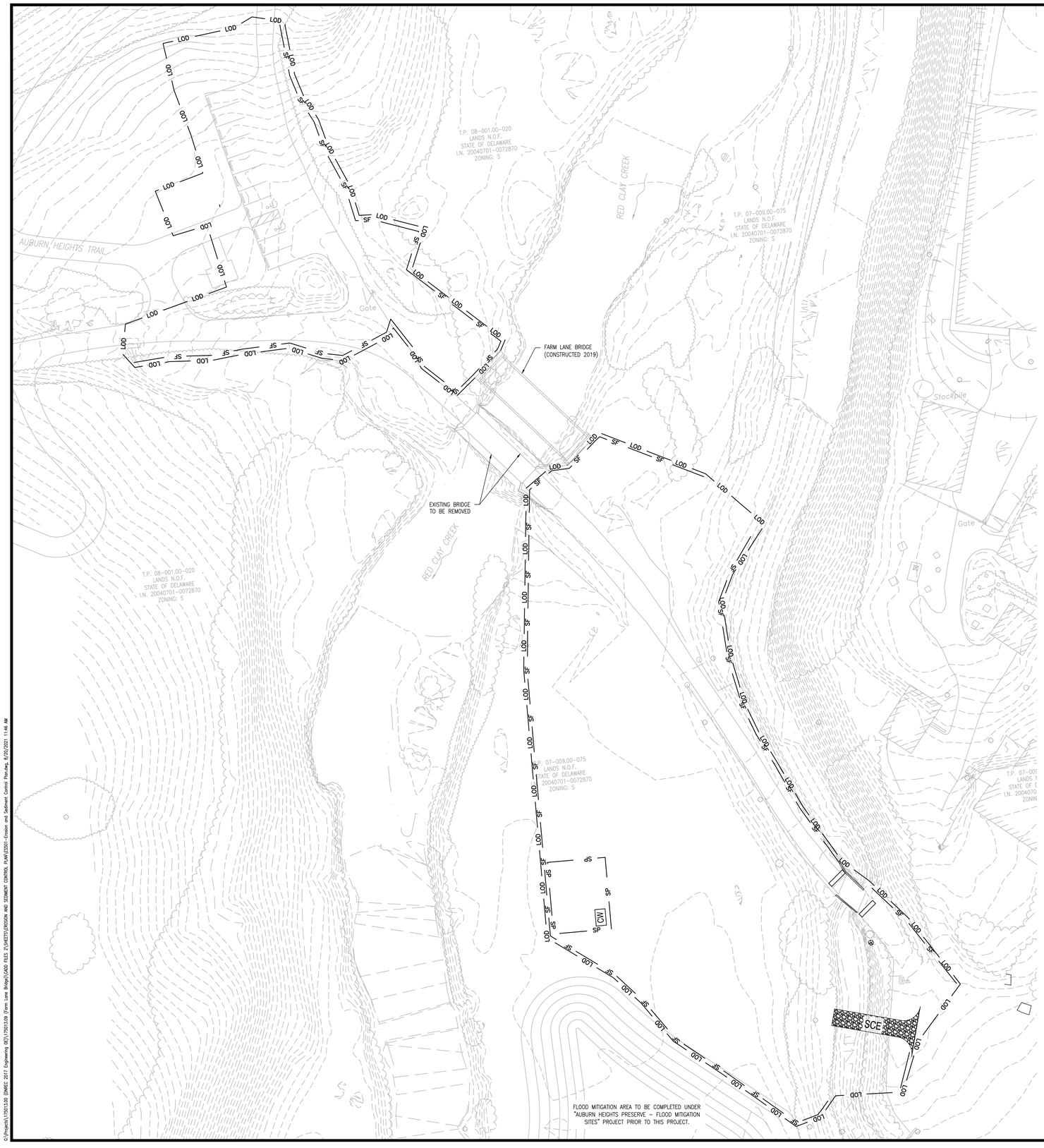

SEQUENCE OF CONSTRUCTION

1. NOTIFY THE DNREC, DIVISION OF SOIL AND WATER CONSERVATION, IN WRITING, OF THE INTENT TO START CONSTRUCTION AT LEAST FIVE DAYS PRIOR TO COMMENCING WORK (TELEPHONE: 302-739-9921).
2. CONDUCT PRECONSTRUCTION CONFERENCE, ON SITE, WITH ALL APPROPRIATE PERSONNEL, INCLUDING THE DNREC CERTIFIED CONSTRUCTION REVIEWER TO SET UP PROJECT SCHEDULE AND PROCEDURES FOR COMPLETING THE SCOPE OF WORK AND CCR NOTIFICATION.
3. DELINEATE WORK AREA ON INTERIOR TRAILS WITHIN THE STATE PARK.
4. CLEAR AND GRUB FOR THOSE AREAS NECESSARY FOR INSTALLATION OF PERIMETER CONTROLS AND EROSION AND SEDIMENT CONTROL MEASURES.
5. INSTALL PERIMETER CONTROLS AND INSTALL EROSION AND SEDIMENT CONTROLS AS REQUIRED FOR FOLLOWING CONSTRUCTION ACTIVITIES.
6. PERFORM THE REMAINING CLEARING AND GRUBBING NECESSARY FOR THE CONSTRUCTION.
7. CONSTRUCT BRIDGE ABUTMENTS.
8. CONSTRUCT NEW CULVERTS.
9. CONSTRUCT NEW PARKING LOT AND PAVE REALIGNED FARM LANE.
10. STABILIZE ALL DISTURBED AREAS.
11. UPON COMPLETION OF ALL LAND DISTURBING ACTIVITIES AND ONCE ALL AREAS ARE STABILIZED, REMOVE EROSION AND SEDIMENT CONTROL MEASURES AT DIRECTION OF DNREC CERTIFIED CONSTRUCTION REVIEWER.

LEGEND

SM-S	STABILIZATION MATTING – SLOPE
—RSF—	REINFORCED SILT FENCE
—CSF—	CONSTRUCTION SAFETY FENCE
—LOC—	LIMIT OF CONSTRUCTION
—LOD—	LIMIT OF DISTURBANCE
— SF —	SILT FENCE
- -151- -	EXISTING CONTOUR
—151—	PROPOSED CONTOUR
	EXISTING WOODS LINE
SCE	STABILIZED CONSTRUCTION ENTRANCE
CIP	CULVERT INLET PROTECTION
CW	CONCRETE WASHOUT AREA
	EXISTING TREE
SAP	SENSITIVE AREA PROTECTION
ST	SEDIMENT TANK

PROJECT NOTES FOR SEDIMENT AND STORMWATER MANAGEMENT

1. THE CONTRACTOR SHALL BE RESPONSIBLE FOR PROVIDING CERTIFIED CONSTRUCTION REVIEW (CCR), INCLUDING CERTIFICATION BY A PROFESSIONAL ENGINEER, REGISTERED IN THE STATE OF DELAWARE.
2. THE DNREC, SEDIMENT AND STORMWATER MANAGEMENT PROGRAM MUST BE NOTIFIED IN WRITING FIVE (5) DAYS PRIOR TO COMMENCING WITH CONSTRUCTION TO SCHEDULE A PRE-CONSTRUCTION MEETING. FAILURE TO DO SO CONSTITUTES A VIOLATION OF THE APPROVED SEDIMENT AND STORMWATER MANAGEMENT PLAN.
3. REVIEW AND APPROVAL OF THE SEDIMENT AND STORMWATER MANAGEMENT PLAN SHALL NOT RELIEVE THE CONTRACTOR FROM HIS OR HER RESPONSIBILITIES FOR COMPLIANCE WITH THE REQUIREMENTS OF THE SEDIMENT AND STORMWATER REGULATIONS, NOR SHALL IT RELIEVE THE CONTRACTOR FROM ERRORS OR OMISSIONS IN THE APPROVED PLAN.
4. IF THE APPROVED PLAN NEEDS TO BE MODIFIED, ADDITIONAL SEDIMENT AND STORMWATER CONTROL MEASURES MAY BE REQUIRED AS DEEMED NECESSARY BY DNREC.
5. FOLLOWING SOIL DISTURBANCE OR REDISTURBANCE, PERMANENT OR TEMPORARY STABILIZATION SHALL BE COMPLETED WITHIN 14 CALENDAR DAYS AS TO THE SURFACE OF ALL PERIMETER SEDIMENT CONTROLS, SOIL STOCKPILES, AND ALL OTHER DISTURBED OR GRADED AREAS ON THE SITE.
6. THE CONTRACTOR SHALL BE RESPONSIBLE FOR MAINTENANCE AND REPAIRS OF ALL EROSION AND SEDIMENT CONTROL AND STORMWATER MANAGEMENT PRACTICES DURING UTILITY INSTALLATION AND THE DURATION OF THE PROJECT.
7. THE DNREC, DIVISION OF PARKS AND RECREATION SHALL BE RESPONSIBLE FOR LONG TERM MAINTENANCE OF THE STRUCTURES, PARKING FACILITIES, AND ALL STORMWATER MANAGEMENT PRACTICES.
8. THE CONTRACTOR SHALL CLEAR AND GRUB AND/OR EXCAVATE ONLY THOSE AREAS ALONG THE PATH WHICH CAN BE BACKFILLED TO THE TOP OF THE BASE COURSE, ROUGH GRADED AND STABILIZED BY THE END OF EACH WORK DAY. SHOULD THE CONTRACTOR CHOOSE TO DISTURB AREAS IN EXCESS OF WHAT CAN BE BACKFILLED, GRADED AND STABILIZED, ADDITIONAL EROSION AND SEDIMENT CONTROL DEVICES MAY BE REQUIRED, AS DETERMINED BY THE ENGINEER IN THE FIELD.
9. ALL DISTURBED AREAS SHALL BE STABILIZED WITH 4" TOPSOIL, SEED, AND STRAW MULCH OR SOIL RETENTION BLANKET, AS REQUIRED, UNLESS OTHERWISE NOTED ON THE PLANS.
10. EROSION CONTROL MATTING IS REQUIRED, AS SHOWN ON THE PLANS, ON SLOPES OF 2:1 OR GREATER AND IN AREAS OF CONCENTRATED FLOW. EROSION CONTROL MATTING SHALL BE NORTH AMERICAN GREEN S75BN, OR APPROVED EQUAL.
11. DUST IS TO BE CONTROLLED EXCLUSIVELY THROUGH THE USE OF WATER, COSTS ASSOCIATED WITH THE FURNISHING AND APPLICATION OF WATER FOR DUST CONTROL SHALL BE INCIDENTAL TO THE PROJECT.
12. ALL EROSION CONTROL MEASURES SHALL BE REMOVED PER THE DIRECTION OF THE ON-SITE DNREC CERTIFIED CONSTRUCTION REVIEWER OR THE APPROPRIATE DELEGATING AGENCY.
13. PERMANENT AND TEMPORARY STABILIZATION SHALL BE IN ACCORDANCE WITH THE LATEST EDITION OF THE DELAWARE EROSION AND SEDIMENT CONTROL HANDBOOK.
14. CONSTRUCTION METHODS FOR VEGETATION STABILIZATION SHALL CONFORM TO THE REQUIREMENTS OF THE DELAWARE EROSION AND SEDIMENT CONTROL HANDBOOK (LATEST EDITION), STANDARDS AND SPECIFICATIONS FOR VEGETATIVE STABILIZATION WITH PERMANENT SEEDING.
15. IT IS INTENDED THAT MUD TRACKING BE ELIMINATED ON ALL ROADWAYS ADJOINING THE PROJECT. CONTRACTOR SHALL CLEAN ALL PAVED SURFACES ADJACENT TO THE SITE AT THE END OF EACH WORK DAY. PERFORM REPAIRS AND MAINTENANCE OF ALL EROSION AND SEDIMENT CONTROL MEASURES AS NECESSARY AND/OR REQUIRED BY DNREC CERTIFIED CONSTRUCTION REVIEWER. ALL PAVED SURFACES ADJOINING THE PROJECT LIMITS SHALL BE LEFT IN A BROOM CLEAN CONDITION AT THE END OF EACH WORK DAY.
16. THE CONTRACTOR SHALL PROVIDE EROSION AND SEDIMENT CONTROL IN ACCORDANCE WITH THE SEDIMENT CONTROL ACT. ALL EROSION AND SEDIMENT CONTROL PRACTICES SHALL BE IN ACCORDANCE WITH THE STANDARDS AND SPECIFICATIONS OF THE DELAWARE EROSION AND SEDIMENT CONTROL HANDBOOK (CURRENT VERSION) AND ALL OTHER APPLICABLE LOCAL REQUIREMENTS.
17. PREFABRICATED CONCRETE WASHOUTS SHALL BE USED. A MANUFACTURED UNIT WITH MINIMUM 4'X4' AREA AND 12" DEPTH SHALL BE PLACED ON TOP OF A WOODEN PALLET. THE UNIT SHALL BE LINED WITH A MINIMUM 4MIL POLYETHYLENE LINER (MUST MEET MANUFACTURER'S RECOMMENDATIONS) THAT CAN BE TIED OFF DURING RAIN EVENTS. AFTER THE WASHOUT UNIT IS UTILIZED IT SHALL REMAIN EXPOSED (EXCEPT DURING RAIN EVENTS) SO THAT THE WASTEWATER CAN EVAPORATE, LEAVING ONLY SOLID CONCRETE RESIDUE. THE PALLET SHALL BE PICKED UP WITH A FORKLIFT AND LEGALLY DISPOSED OFF SITE. A TYPICAL 4'X4' UNIT MAY BE ABLE TO ACCOMMODATE 10 WASHOUTS BEFORE NEEDING TO BE REPLACED. THE UNIT SIZE OR DISPOSAL FREQUENCY SHALL BE ADJUSTED DEPENDING ON THE EXPECTED FREQUENCY OF USE.
18. THE LOCATION OF THE PREFABRICATED CONCRETE WASHOUTS SHALL BE SUBMITTED TO THE ENGINEER FOR APPROVAL.

0' 30' 60' 90'
SCALE: 1" = 30'

REVISIONS:

DATE:	DESCRIPTION:	BY:

AUBURN VALLEY STATE PARK
FARM LANE BRIDGE PHASE 2

PRE-DEVELOPMENT EROSION AND SEDIMENT CONTROL PLAN

SEAL:
WALTER J. HOEY, III
REGISTERED
NO. 11204
DELAWARE
PROFESSIONAL ENGINEER
8/19/2021

CIVIL ENGINEER:
CENTURY ENGINEERING
CONSULTING ENGINEERS, SURVEYORS
550 S. BAY ROAD
DOVER, DELAWARE 19901

CONTRACT NO.: 175013.09

DELAWARE STATE PARKS
YOUR OUTDOOR ADVENTURE STARTS HERE

DESIGNED BY: ARC
DRAWN BY: ARC
CHECKED BY: AES
DATE: AUGUST 2021
SCALE: 1" = 30'
SHEET NO.: ES501
CONTRACT NO.: AVSP-NVF-10A

G:\Projects\175013.00 (DNREC 2017 Engineering IQC)\175013.09 (Farm Lane Bridge)\CADD FILES Z\SHEETS\EROSION AND SEDIMENT CONTROL PLAN\ES501-Erosion and Sediment Control Plan.dwg, 8/20/2021 11:48 AM

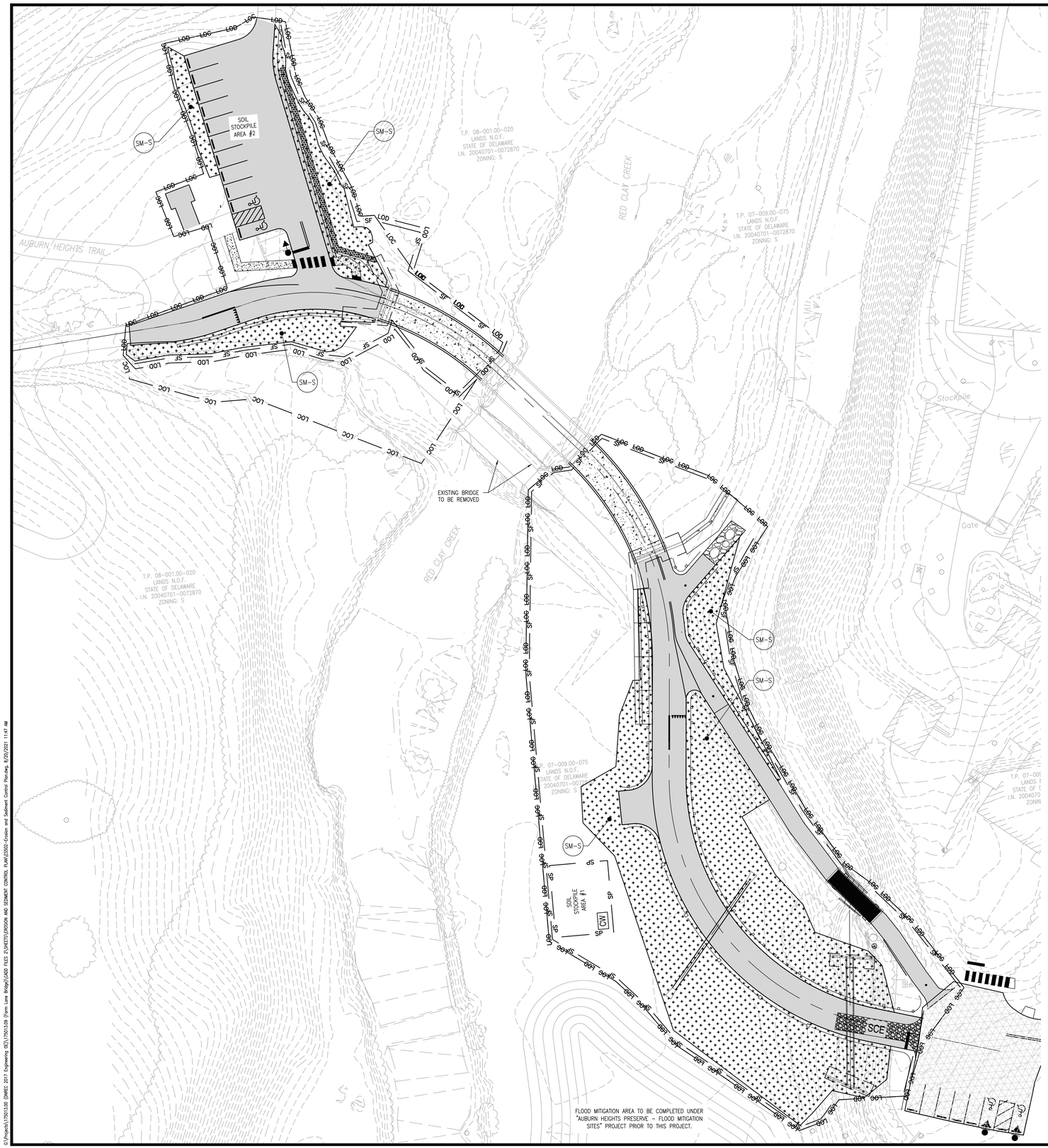

SEQUENCE OF CONSTRUCTION

1. NOTIFY THE DNREC, DIVISION OF SOIL AND WATER CONSERVATION, IN WRITING, OF THE INTENT TO START CONSTRUCTION AT LEAST FIVE DAYS PRIOR TO COMMENCING WORK (TELEPHONE: 302-739-9921).
2. CONDUCT PRECONSTRUCTION CONFERENCE, ON SITE, WITH ALL APPROPRIATE PERSONNEL, INCLUDING THE DNREC CERTIFIED CONSTRUCTION REVIEWER TO SET UP PROJECT SCHEDULE AND PROCEDURES FOR COMPLETING THE SCOPE OF WORK AND CCR NOTIFICATION.
3. DELINEATE WORK AREA ON INTERIOR TRAILS WITHIN THE STATE PARK.
4. CLEAR AND GRUB FOR THOSE AREAS NECESSARY FOR INSTALLATION OF PERIMETER CONTROLS AND EROSION AND SEDIMENT CONTROL MEASURES.
5. INSTALL PERIMETER CONTROLS AND INSTALL EROSION AND SEDIMENT CONTROLS AS REQUIRED FOR FOLLOWING CONSTRUCTION ACTIVITIES.
6. PERFORM THE REMAINING CLEARING AND GRUBBING NECESSARY FOR THE CONSTRUCTION.
7. CONSTRUCT BRIDGE ABUTMENTS.
8. CONSTRUCT NEW CULVERTS.
9. CONSTRUCT NEW PARKING LOT AND PAVE REALIGNED FARM LANE.
10. STABILIZE ALL DISTURBED AREAS.
11. UPON COMPLETION OF ALL LAND DISTURBING ACTIVITIES AND ONCE ALL AREAS ARE STABILIZED, REMOVE EROSION AND SEDIMENT CONTROL MEASURES AT DIRECTION OF DNREC CERTIFIED CONSTRUCTION REVIEWER.

LEGEND

SM-S	STABILIZATION MATTING – SLOPE
—RSF—	REINFORCED SILT FENCE
—CSF—	CONSTRUCTION SAFETY FENCE
—LOC—	LIMIT OF CONSTRUCTION
—LOD—	LIMIT OF DISTURBANCE
— SF —	SILT FENCE
- -151- -	EXISTING CONTOUR
151	PROPOSED CONTOUR
	EXISTING WOODS LINE
SCE	STABILIZED CONSTRUCTION ENTRANCE
CIP	CULVERT INLET PROTECTION
CW	CONCRETE WASHOUT AREA
	EXISTING TREE
SAP	SENSITIVE AREA PROTECTION
ST	SEDIMENT TANK

PROJECT NOTES FOR SEDIMENT AND STORMWATER MANAGEMENT

1. THE CONTRACTOR SHALL BE RESPONSIBLE FOR PROVIDING CERTIFIED CONSTRUCTION REVIEW (CCR), INCLUDING CERTIFICATION BY A PROFESSIONAL ENGINEER, REGISTERED IN THE STATE OF DELAWARE.
2. THE DNREC, SEDIMENT AND STORMWATER MANAGEMENT PROGRAM MUST BE NOTIFIED IN WRITING FIVE (5) DAYS PRIOR TO COMMENCING WITH CONSTRUCTION TO SCHEDULE A PRE-CONSTRUCTION MEETING. FAILURE TO DO SO CONSTITUTES A VIOLATION OF THE APPROVED SEDIMENT AND STORMWATER MANAGEMENT PLAN.
3. REVIEW AND APPROVAL OF THE SEDIMENT AND STORMWATER MANAGEMENT PLAN SHALL NOT RELIEVE THE CONTRACTOR FROM HIS OR HER RESPONSIBILITIES FOR COMPLIANCE WITH THE REQUIREMENTS OF THE SEDIMENT AND STORMWATER REGULATIONS, NOR SHALL IT RELIEVE THE CONTRACTOR FROM ERRORS OR OMISSIONS IN THE APPROVED PLAN.
4. IF THE APPROVED PLAN NEEDS TO BE MODIFIED, ADDITIONAL SEDIMENT AND STORMWATER CONTROL MEASURES MAY BE REQUIRED AS DEEMED NECESSARY BY DNREC.
5. FOLLOWING SOIL DISTURBANCE OR REDISTURBANCE, PERMANENT OR TEMPORARY STABILIZATION SHALL BE COMPLETED WITHIN 14 CALENDAR DAYS AS TO THE SURFACE OF ALL PERIMETER SEDIMENT CONTROLS, SOIL STOCKPILES, AND ALL OTHER DISTURBED OR GRADED AREAS ON THE SITE.
6. THE CONTRACTOR SHALL BE RESPONSIBLE FOR MAINTENANCE AND REPAIRS OF ALL EROSION AND SEDIMENT CONTROL AND STORMWATER MANAGEMENT PRACTICES DURING UTILITY INSTALLATION AND THE DURATION OF THE PROJECT.
7. THE DNREC, DIVISION OF PARKS AND RECREATION SHALL BE RESPONSIBLE FOR LONG TERM MAINTENANCE OF THE STRUCTURES, PARKING FACILITIES, AND ALL STORMWATER MANAGEMENT PRACTICES.
8. THE CONTRACTOR SHALL CLEAR AND GRUB AND/OR EXCAVATE ONLY THOSE AREAS ALONG THE PATH WHICH CAN BE BACKFILLED TO THE TOP OF THE BASE COURSE, ROUGH GRADED AND STABILIZED BY THE END OF EACH WORK DAY. SHOULD THE CONTRACTOR CHOOSE TO DISTURB AREAS IN EXCESS OF WHAT CAN BE BACKFILLED, GRADED AND STABILIZED, ADDITIONAL EROSION AND SEDIMENT CONTROL DEVICES MAY BE REQUIRED, AS DETERMINED BY THE ENGINEER IN THE FIELD.
9. ALL DISTURBED AREAS SHALL BE STABILIZED WITH 4" TOPSOIL, SEED, AND STRAW MULCH OR SOIL RETENTION BLANKET, AS REQUIRED, UNLESS OTHERWISE NOTED ON THE PLANS.
10. EROSION CONTROL MATTING IS REQUIRED, AS SHOWN ON THE PLANS, ON SLOPES OF 2:1 OR GREATER AND IN AREAS OF CONCENTRATED FLOW. EROSION CONTROL MATTING SHALL BE NORTH AMERICAN GREEN S75BN, OR APPROVED EQUAL.
11. DUST IS TO BE CONTROLLED EXCLUSIVELY THROUGH THE USE OF WATER, COSTS ASSOCIATED WITH THE FURNISHING AND APPLICATION OF WATER FOR DUST CONTROL SHALL BE INCIDENTAL TO THE PROJECT.
12. ALL EROSION CONTROL MEASURES SHALL BE REMOVED PER THE DIRECTION OF THE ON-SITE DNREC CERTIFIED CONSTRUCTION REVIEWER OR THE APPROPRIATE DELEGATING AGENCY.
13. PERMANENT AND TEMPORARY STABILIZATION SHALL BE IN ACCORDANCE WITH THE LATEST EDITION OF THE DELAWARE EROSION AND SEDIMENT CONTROL HANDBOOK.
14. CONSTRUCTION METHODS FOR VEGETATION STABILIZATION SHALL CONFORM TO THE REQUIREMENTS OF THE DELAWARE EROSION AND SEDIMENT CONTROL HANDBOOK (LATEST EDITION), STANDARDS AND SPECIFICATIONS FOR VEGETATIVE STABILIZATION WITH PERMANENT SEEDING.
15. IT IS INTENDED THAT MUD TRACKING BE ELIMINATED ON ALL ROADWAYS ADJOINING THE PROJECT. CONTRACTOR SHALL CLEAN ALL PAVED SURFACES ADJACENT TO THE SITE AT THE END OF EACH WORK DAY, PERFORM REPAIRS AND MAINTENANCE OF ALL EROSION AND SEDIMENT CONTROL MEASURES AS NECESSARY AND/OR REQUIRED BY DNREC CERTIFIED CONSTRUCTION REVIEWER. ALL PAVED SURFACES ADJOINING THE PROJECT LIMITS SHALL BE LEFT IN A BROOM CLEAN CONDITION AT THE END OF EACH WORK DAY.
16. THE CONTRACTOR SHALL PROVIDE EROSION AND SEDIMENT CONTROL IN ACCORDANCE WITH THE SEDIMENT CONTROL ACT. ALL EROSION AND SEDIMENT CONTROL PRACTICES SHALL BE IN ACCORDANCE WITH THE STANDARDS AND SPECIFICATIONS OF THE DELAWARE EROSION AND SEDIMENT CONTROL HANDBOOK (CURRENT VERSION) AND ALL OTHER APPLICABLE LOCAL REQUIREMENTS.
17. PREFABRICATED CONCRETE WASHOUTS SHALL BE USED. A MANUFACTURED UNIT WITH MINIMUM 4'X4' AREA AND 12" DEPTH SHALL BE PLACED ON TOP OF A WOODEN PALLET. THE UNIT SHALL BE LINED WITH A MINIMUM 4MIL POLYETHYLENE LINER (MUST MEET MANUFACTURER'S RECOMMENDATIONS) THAT CAN BE TIED OFF DURING RAIN EVENTS. AFTER THE WASHOUT UNIT IS UTILIZED IT SHALL REMAIN EXPOSED (EXCEPT DURING RAIN EVENTS) SO THAT THE WASTEWATER CAN EVAPORATE, LEAVING ONLY SOLID CONCRETE RESIDUE. THE PALLET SHALL BE PICKED UP WITH A FORKLIFT AND LEGALLY DISPOSED OFF SITE. A TYPICAL 4'X4' UNIT MAY BE ABLE TO ACCOMMODATE 10 WASHOUTS BEFORE NEEDING TO BE REPLACED. THE UNIT SIZE OR DISPOSAL FREQUENCY SHALL BE ADJUSTED DEPENDING ON THE EXPECTED FREQUENCY OF USE.
18. THE LOCATION OF THE PREFABRICATED CONCRETE WASHOUTS SHALL BE SUBMITTED TO THE ENGINEER FOR APPROVAL.

0' 30' 60' 90'
SCALE: 1" = 30'

REVISIONS:

DATE:	DESCRIPTION:	BY:

AUBURN VALLEY STATE PARK
FARM LANE BRIDGE PHASE 2

POST-DEVELOPMENT EROSION AND SEDIMENT CONTROL PLAN

SEAL: WALTER J. HOEY III REGISTERED NO. 11204 DELAWARE PROFESSIONAL ENGINEER
8/19/2021

CIVIL ENGINEER:
CENTURY ENGINEERING
CONSULTING ENGINEERS, SURVEYORS
550 S. BAY ROAD
DOVER, DELAWARE 19901

CONTRACT NO.: 175013.09

DELAWARE STATE PARKS
YOUR OUTDOOR ADVENTURE STARTS HERE.

DESIGNED BY: ARC
DRAWN BY: ARC
CHECKED BY: AES
DATE: AUGUST 2021
SCALE: 1" = 30'
SHEET NO.: ES502
CONTRACT NO.: AVSP-NVF-10A

G:\Projects\175013.00 (DNREC 2017 Engineering OES)\175013.09 (Farm Lane Bridge)\CADD FILES A\SHEETS\EROSION AND SEDIMENT CONTROL PLAN\ES502-Erosion and Sediment Control Plan.dwg, 8/20/2021 11:47 AM

Standard Detail & Specifications
Reinforced Silt Fence

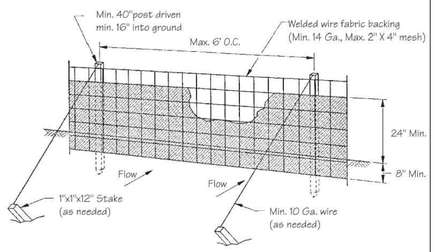

DATA
Max. controlled slope

Perspective

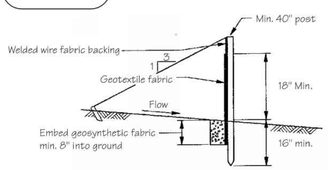

Cross-section

Source:	Symbol:	Detail No.
Adapted from Transco, Inc.	RSF	DE-ESC-3.1.2.2 Sheet 1 of 2 Effective FEB 2019

Standard Detail & Specifications
Reinforced Silt Fence

Construction Notes:

1. Welded wire fabric to be fastened securely to the fence posts with wire ties or staples.
2. Filter cloth to be fastened securely to woven wire fence with ties spaced every 24 inches at top and mid-section.
3. When two sections of fabric adjoin each other, they shall be overlapped by six inches and folded.
4. Maintenance shall be performed as needed and material removed when "bulges" develop in the silt fence.

Materials:

1. Posts: Steel either T or U or 2" x 2" hardwood
2. Geotextile Fabric: Type GD-I
3. Backing: Woven welded wire, 14 Ga., 2" X 4" mesh opening

Source:	Symbol:	Detail No.
Adapted from Transco, Inc.	RSF	DE-ESC-3.1.2.2 Sheet 2 of 2 Effective FEB 2019

Standard Detail & Specifications
Stabilized Construct. Entrance

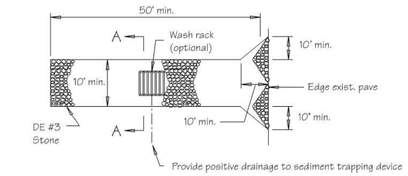

Plan

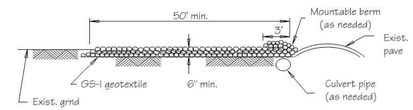

Profile

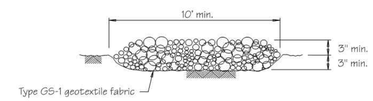

Section A-A (Std.)

Source:	Symbol:	Detail No.
Adapted from VA ESC Handbook	SCE	DE-ESC-3.4.7 Sheet 1 of 2 Effective FEB 2019

Standard Detail & Specifications
Stabilized Construct. Entrance

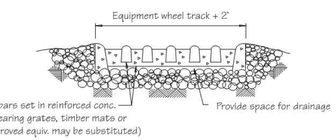

Section A-A (Opt.)

Construction Notes:

1. Stone size - Use DE #3 stone.
2. Length - As required, but not less than 50 feet (except on a single residence lot where a 30 foot minimum length would apply).
3. Thickness - Not less than size (6) inches.
4. Width - Ten (10) foot minimum, but not less than the full width at points where ingress or egress occurs.
5. Geotextile - Type GS-I; placed over the entire area prior to placing of stone.
6. Surface Water - All surface water flowing or diverted toward construction entrances shall be piped across the entrance. If piping is impractical, a mountable berm with 5:1 slopes will be permitted.
7. Maintenance - The entrance shall be maintained in a condition which will prevent tracking or flowing of sediment onto public rights-of-way. This may require periodic top dressing with additional stone as conditions demand and repair and/or cleanout of any measures used to trap sediment. All sediment spilled, dropped, washed or tracked onto public rights-of-way must be removed immediately.
8. Washing - Vehicle wheels shall be cleaned to remove sediment prior to entrance onto public rights-of-way. When washing is required, it shall be done on an area stabilized with stone and which drains into an approved sediment trapping device.
9. Inspection - Periodic inspection and needed maintenance shall be provided after each rain.

Source:	Symbol:	Detail No.
Adapted from VA ESC Handbook	SCE	DE-ESC-3.4.7 Sheet 2 of 2 Effective FEB 2019

Standard Detail & Specifications
Stabilization Matting - Slope

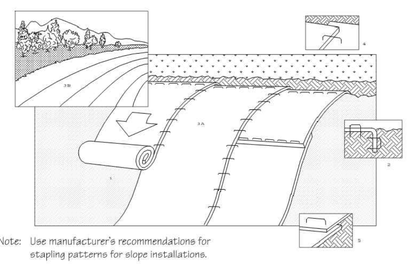

Note: Use manufacturer's recommendations for stapling patterns for slope installations.

Perspective

Construction Notes:

1. Prepare soil before installing matting, including application of lime, fertilizer, and seed.
2. Begin at the top of the slope by anchoring the mat in a 6" deep X 6" wide trench. Backfill and compact trench after stapling.
3. Roll the mats (A) down or (B) horizontally across the slope.
4. The edges of parrallel mats must be stapled with approx. 2" overlap.
5. When mats must be spliced down the slope, place mats end over end (shingle style) with approx. 4" overlap. Staple through overlapped area, approx. 12" apart.

Source:	Symbol:	Detail No.
Adapted from North American Green, Inc.	SM-S	DE-ESC-3.4.6.1 Sheet 1 of 2 Effective FEB 2019

Standard Detail & Specifications
Stabilization Matting - Slope

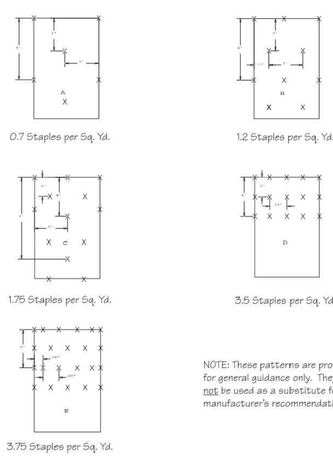

NOTE: These patterns are provided for general guidance only. They shall not be used as a substitute for manufacturer's recommendations.

Stapling Patterns

Source:	Symbol:	Detail No.
Adapted from North American Green, Inc.	SM-S	DE-ESC-3.4.6.1 Sheet 2 of 2 Effective FEB 2019

Standard Detail & Specifications
Soil Stockpile

DATA
Max. height (H)

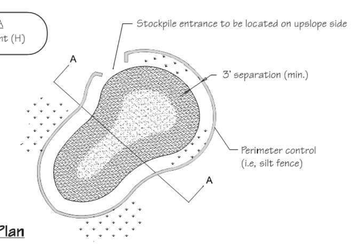

Plan

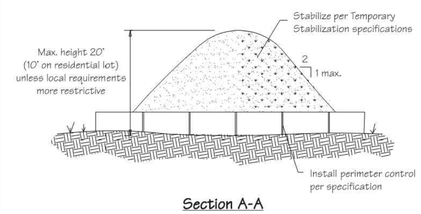

Section A-A

Source:	Symbol:	Detail No.
Adapted from Colorado Urban Storm Drainage Criteria Manual, Vol 3	SP	DE-ESC-3.7.3 Sheet 1 of 2 Effective FEB 2019

Standard Detail & Specifications
Soil Stockpile

Construction Notes:

1. Locate stockpiles so that they are 50 feet from any storm drain inlet, open channel, wetland or waterbody. Redirect any concentrated flow around the stockpile using an approved erosion and sediment control measure.
2. Secure the perimeter of the stockpile with an approved erosion and sediment control perimeter device.
3. If stockpile is to remain inactive for more than 14 calendar days, the stockpile must be vegetated. Follow the temporary vegetation specifications. The vegetation chosen shall last the duration of the stockpile; the stockpile shall be restabilized if the temporary vegetation dies or erosion results.

Source:	Symbol:	Detail No.
Adapted from Colorado Urban Storm Drainage Criteria Manual, Vol 3	SP	DE-ESC-3.7.3 Sheet 2 of 2 Effective FEB 2019

REVISIONS:

DATE:	DESCRIPTION:	BY:

AUBURN VALLEY STATE PARK
FARM LANE BRIDGE PHASE 2

EROSION AND SEDIMENT CONTROL DETAILS

SEAL:
WALTER J. HOEY III
REGISTERED
NO. 11204
DELAWARE
PROFESSIONAL ENGINEER
8/19/2021

CIVIL ENGINEER:
CENTURY ENGINEERING
CONSULTING ENGINEERS, SURVEYORS
550 S. BAY ROAD
DOVER, DELAWARE 19901

CONTRACT NO.: 175013.09

DELAWARE STATE PARKS
YOUR OUTDOOR ADVENTURE STARTS HERE

DESIGNED BY: WJH
DRAWN BY: ZTP/DLD
CHECKED BY: AES
DATE: AUGUST 2021
SCALE: NONE
SHEET NO.: ES503
CONTRACT NO.: NAT21021-AVFARMLANE

G:\Projects\175013.00 (DNREC 2017 Engineering IQC)\175013.09 (Farm Lane Bridge)\CADD FILES Z\SHEETS\EROSION AND SEDIMENT CONTROL PLAN\ES503-Erosion and Sediment Control Details.dwg, 8/20/2021 11:47 AM

Standard Detail & Specifications
Vegetative Stabilization

TEMPORARY SEEDING BY RATES, DEPTHS AND DATES											
Mix #	Species[6]	Seeding Rate		Optimum Seeding Dates [1] O = Optimum Planting Period; A = Acceptable Planting Period							Planting Depth[3]
				Coastal Plain			Piedmont			All	
	Certified Seed	lb/Ac[5]	lb/1000 sq.ft.	2/1-4/30	[2] 5/1-8/14	8/15-10/31	3/1-4/30	[2] 5/1-7/31	8/1-10/31	10/31-2/1	
1	Barley	125	4	O	A	O	O	A	O		1-2 inches 2-3" sandy soils
2	Oats	125	4	O	A	A	O	A	A		1-2 inches 2-3" sandy soils
3	Rye	125	4	O	A	O	O	A	O	A	1-2 inches 2-3" sandy soils
4	Perennial Ryegrass	125	4	O	A	O	O	A	O		0.5 inches 1-2" sandy soils
5	Annual Ryegrass	125	4	O	A	O	O	A	O	A	0.5 inches 1-2" sandy soils
6	Winter Wheat	125	4	O	A	O	O	A	O	A	1-2 inches 2-3" sandy soils
7	Foxtail Millet	30 PLS	0.7		O			O			0.5 inches 1-2" sandy soils
8	Pearl Millet	20 PLS	0.5		O			O			0.5 inches 1-2" sandy soils

1. Winter seeding requires 3 tons per acre of straw mulch for proper stabilization.
2. May be planted throughout summer if soil moisture is adequate or seeded area can be irrigated.
3. Applicable on slopes 3:1 or less.
4. Fifty pounds per acre of Annual Lespedeza may be added to 1/2 the seeding rate of any of the above species.
5. Use varieties currently recommended for Delaware. Contact a County Extension Office for information.
6. Warm season grasses such as Millet or Weeping Lovegrass may be used between 6/1 and 8/1 if desired. Seed at 3-5 lbs. per acre. Good on low fertility and acid areas. Seed after frost through summer at a depth of 0.5".

TEMPORARY SEED SHALL MEET REQUIREMENTS OF DNREC SEED #3, #5 OR #6.

NOTE: Alternative seed mixes may be used with prior approval from the Department or Delegated Agency.

Source: Delaware ESC Handbook | Symbol: | Detail No. **DE-ESC-3.4.3** Sheet 1 of 4 Effective FEB 2019

Standard Detail & Specifications
Vegetative Stabilization

PERMANENT SEEDING AND SEEDING DATES											
Seeding Mixtures		Seeding Rate[1]		Optimum Seeding Dates [2] O = Optimum Planting Period A = Acceptable Planting Period							Remarks
Mix No.	Certified Seed[3]			Coastal Plain			Piedmont			All[4]	
	Well Drained Soils	lb/Ac	lb/1000 sq.ft.	2/1-4/30	5/1-8/14	8/15-10/31	3/1-4/30	5/1-7/31	8/1-10/31	10/31-2/1	
1	Tall Fescue Weeping Lovegrass	140 10	3.2 0.23	A	O	A	A	O	A	Add 100 lbs./ac Winter Rye	Good erosion control mix Tolerant of low fertility soils Lovegrass very difficult to mow; Germinates only in hot weather
2	Deertongue Sheep Fescue Common Lespedeza[5] Inoculated	30 30 15	0.69 0.69 0.35	A	O	A	A	O	A	Add 100 lbs./ac Winter Rye	Good erosion control mix Tolerant of low fertility soils Good wildlife cover and food
3	Tall Fescue (Turf-type) **or** Strong Creeping Red Fescue **or** Perennial Ryegrass **plus** Flatpea[5]	50 50 50 15	1.15 1.15 1.15 0.34	O	A	O	O	A	O	Add 100 lbs./ac. Winter Rye	Good erosion control mix Tall Fescue for droughty conditions. Creeping Red Fescue for heavy shade. Flatpea to suppress woody vegetation.
4	Strong Creeping Red Fescue Kentucky Bluegrass Perennial Ryegrass **or** Redtop **plus** White Clover[5]	100 70 15 5 3	2.3 1.61 0.35 0.11 0.07	O	A	O	O	A	O	Add 100 lbs./ac. Winter Rye	Suitable waterway mix. Canada Bluegrass more drought tolerant. Use Redtop for increased drought tolerance.
5	Switchgrass[6,7] **or** Coastal Panicgrass Big Bluestem Little Bluestem Indian Grass	10 10 5 5 5	0.23 0.23 0.11 0.11 0.1		O			O			Native warm-season mixture. Tolerant of low fertility soils. Drought tolerant. Poor shade tolerance. N fertilizer discouraged - weeds
6	Tall Fescue (turf-type) (Blend of 3 cultivars)	150	3.5	O	A	O	O	A	O		Managed filter strip for nutrient uptake.
7	Tall Fescue Ky. Bluegrass (Blend) Perennial Ryegrass	150 20 20	3.5 0.46 0.46	O	A	O	O	A	O		Three cultivars of Kentucky Bluegrass. Traffic tolerant.
8	Big Bluestem[7] Indian Grass[7] Little Bluestem[7] Creeping Red Fescue **plus one of:** Partridge Pea Bush Clover Wild Indigo Showy Tick-Trefoil	10 10 8 30 5 3 3 2	0.23 0.23 0.18 0.69 0.11 0.07 0.07 0.05	O	A		O	A			All species are native. Indian Grass and Bluestem have fluffy seeds. Plant with a specialized native seed drill. Creeping Red Fescue will provide erosion protection while the warm season grasses get established.

NOTE: Alternative seed mixes may be used with prior approval from the Department or Delegated Agency.

Source: Delaware ESC Handbook | Symbol: | Detail No. **DE-ESC-3.4.3** Sheet 2 of 4 Effective FEB 2019

Standard Detail & Specifications
Vegetative Stabilization

PERMANENT SEEDING AND SEEDING DATES (cont.)											
Seeding Mixtures		Seeding Rate[1]		Optimum Seeding Dates [2] O = Optimum Planting Period A = Acceptable Planting Period							Remarks
Mix No.	Certified Seed[3]			Coastal Plain			Piedmont			All[4]	
	Poorly Drained Soils	lb/Ac	lb/1000 sq.ft.	2/1-4/30	5/1-8/14	8/15-10/31	3/1-4/30	5/1-7/31	8/1-10/31	10/31-2/1	
9	Redtop Creeping Bentgrass Sheep Fescue Rough Bluegrass	75 35 30 45	1.72 0.8 0.69 1	O	A	O	O	A	O	Add 100 lbs./ac. Winter Rye	Quick stabilization of disturbed sites and waterways
10	Reed Canarygrass[6]	10	0.23	A		O	A		O		Good erosion control, wildlife cover and wetland revegetation.
	Residential Lawns										
11	Tall Fescue Perennial Ryegrass Kentucky Bluegrass Blend	100 25 30	2.3 0.57 0.69	O	A	O	O	A	O		High value, high maintenance, light traffic, irrigation necessary. Well drained soils, full sun.
12	Tall Fescue Perennial Ryegrass Sheep Fescue	100 25 25	2.3 0.57 0.57	O	A	O	O	A	O		Moderate value, low maintenance, traffic tolerant
13	Creeping Red Fescue Chewings Fescue Rough Bluegrass Kentucky Bluegrass	50 50 20 20	1.15 1.15 0.4 0.4	O	A	O	O	A	O		Shade tolerant, moderate traffic tolerance, moderate maintenance.
14	Creeping Red Fescue Rough Bluegrass **or** Chewings Fescue	50 90	1.15 2.1	O	A	O	O	A	O		Shade tolerant, moisture tolerant.
15	K-31 Tall Fescue	150	3.5	O	A	O	O	A	O		Monoculture, but performs well alone in lawns. Discouraged.

1. When hydroseeding is the chosen method of application, the total rate of seed should be increased by 25%.
2. Winter seeding requires 3 tons per acre of straw mulch. Planting dates listed above are average for Delaware. These dates may require adjustment to reflect local conditions.
3. All seed shall meet the minimum purity and minimum germination percentages recommended by the Delaware Department of Agriculture. The maximum % of weed seeds shall be in accordance with Section 1, Chapter 24, Title 3 of the Delaware Code.
4. Cool season species may be planted throughout summer if soil moisture is adequate or seeded area can be irrigated.
5. All leguminous seed must be inoculated.
6. Warm season grass mix and Reed Canary Grass cannot be mowed more than 4 times per year.
7. Warm season grasses require a soil temperature of at least 50 degrees in order to germinate, and will remain dormant until then.

PERMANENT SEED SHALL MEET REQUIREMENTS OF DNREC PERMANENT SEED MIX #9 IN WET AREAS OR PERMANENT SEED MIX #12 IN ALL OTHER AREAS.

NOTE: Alternative seed mixes may be used with prior approval from the Department or Delegated Agency.

Source: Delaware ESC Handbook | Symbol: | Detail No. **DE-ESC-3.4.3** Sheet 3 of 4 Effective FEB 2019

Standard Detail & Specifications
Vegetative Stabilization

Construction Notes:

1. Site Preparation
   a. Prior to seeding, install needed erosion and sediment control practices such as diversions, grade stabilization structures, berms, dikes, grassed waterways, and sediment basins.
   b. Final grading and shaping is not necessary for temporary seedings.
2. Seedbed Preparation

   It is important to prepare a good seedbed to insure the success of establishing vegetation. The seedbed should be well prepared, loose, uniform, and free of large clods, rocks, and other objectionable material. The soil surface should not be compacted or crusted.
3. Soil Amendments
   a. Lime - Apply liming materials based on the recommendations of a **soil test** in accordance with the approved nutrient management plan. If a nutrient management plan is not required, apply dolomitic limestone at the rate of 1 to 2 tons per acre. Apply limestone uniformly and incorporate into the top 4 to 6 inches of soil.
   b. Fertilizer - Apply fertilizer based on the recommendations of a **soil test** in accordance with the approved nutrient management plan. If a nutrient management plan is not required, apply a formulation of 10-10-10 at the rate of 600 pounds per acre. Apply fertilizer uniformly and incorporate into the top 4 to 6 inches of soils.
4. Seeding
   a. For **temporary stabilization**, select a mixture from **Sheet 1**. For a **permanent stabilization**, select a mixture from **Sheet 2** or **Sheet 3** depending on the conditions. Alternative seed mixes may be used with prior approval from the Department or Delegated Agency.
   b. Apply seed uniformly with a broadcast seeder, drill, cultipacker seeder or hydroseeder. All seed will be applied at the recommended rate and planting depth.
   c. Seed that has been broadcast should be covered by raking or dragging and then lightly tamped into place using a roller or cultipacker. If hydroseeding is used and the seed and fertilizer is mixed, they will be mixed on site and the seeding shall be done immediately and without interruption.
5. Mulching

   All mulching shall be done in accordance with detail **DE-ESC-3.4.5**.

Source: Delaware ESC Handbook | Symbol: | Detail No. **DE-ESC-3.4.3** Sheet 4 of 4 Effective FEB 2019

Standard Detail & Specifications
Topsoiling

Construction Notes:

1. Site Preparation (Where Topsoil is to be added)

Note: When topsoiling, maintain needed erosion and sediment control practices such as diversions, grade stabilization structures, berms, dikes, waterways and sediment basins.

a. Grading - Grades on the areas to be topsoiled which have been previously established shall be maintained.

b. Liming - Where the topsoil is either highly acid or composed of heavy clays, ground limestone shall be spread at the rate of 4-8 tons/acre (200-400 pounds per 1,000 square feet). Lime shall be distributed uniformly over designated areas and worked into the soil in conjunction with tillage operations as described in the following procedures.

c. Tilling - After the areas to be topsoiled have been brought to grade, and immediately prior to dumping and spreading the topsoil, the subgrade shall be loosened by discing or by scarifying to a depth of a least 3 inches to permit bonding of the topsoil to the subsoil. Pack by passing a bulldozer up and down over the entire surface area of the slope to create horizontal erosion check slots to prevent topsoil from sliding down the slope.

2. Topsoil Material and Application

Note: Topsoil salvaged from the existing site may often be used but it should meet the same standards as set forth in these specifications. The depth of topsoil to be salvaged shall be no more than the depth described as a representative profile for that particular soil type as described in the soil survey published by USDA-SCS in cooperation with Delaware Agricultural Experimental Station.

Source: USDA - NRCS | Symbol: | Detail No. **DE-ESC-3.4.1** Sheet 1 of 2 Effective FEB 2019

Standard Detail & Specifications
Topsoiling

Construction Notes (cont.)

a. Materials - Topsoil shall be a loam, sandy loam, clay loam, silt loam, sandy clay loam, loamy sand or other soil as approved by an agronomist or soil scientist. It shall not have a mixture of contrasting textured subsoil and contain no more than 5 percent by volume of cinders, stones, slag, coarse fragment, gravel, sticks, roots, trash or other extraneous materials larger than 1-1/2 inches in diameter. Topsoil must be free of plants or plant parts of bermudagrass, quackgrass, Johnsongrass, nutsedge, poison ivy, thistles, or others as specified. All topsoil shall be tested by a reputable laboratory for organic matter content, pH and soluble salts. A pH of 6.0 to 7.5 and an organic content of not less than 1.5 percent by weight is required. If pH value is less than 6.0 lime shall be applied and incorporated with the topsoil to adjust the pH to 6.5 or higher. Topsoil containing soluble salts greater than 500 parts per million shall not be used.

Note: No sod or seed shall be placed on soil which has been treated with soil sterilants or chemicals used for weed control until sufficient time has elapsed to permit dissipation of toxic materials.

b. Grading - The topsoil shall be uniformly distributed and compacted to a minimum of four (4) inches. Spreading shall be performed in such a manner that sodding or seeding can proceed with a minimum of additional soil preparation and tillage. Any irregularities in the surface resulting from topsoiling or other operations shall be corrected in order to prevent the formation of depressions or water pockets. Topsoil shall not be placed while in a frozen or muddy condition, when the subgrade is excessively wet, or in a condition that may otherwise be detrimental to proper grading and seedbed preparation.

Note: Topsoil substitutes or amendments as approved by a qualified agronomist or soil scientist, may be used in lieu of natural topsoil. Compost material used to improve the percentage of organic matter shall be provided by a certified supplier.

Compost amendments that are intended to meet specific post-construction stormwater management goals shall further meet the requirements of **Appendix 3.06.2 Post Construction Stormwater Management BMP Standards and Specifications, Section 14.0 Soil Amendments.**

Source: USDA - NRCS | Symbol: | Detail No. **DE-ESC-3.4.1** Sheet 2 of 2 Effective FEB 2019

Standard Detail & Specifications
Stabilization Matting - Slope

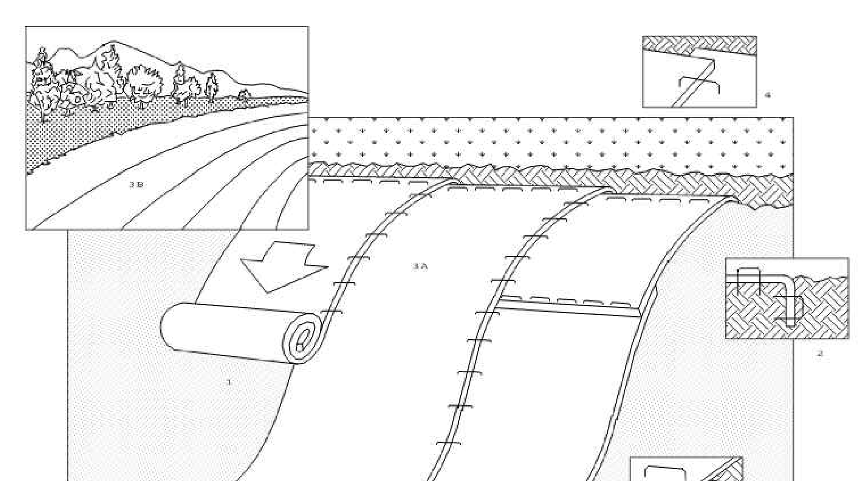

Note: Use manufacturer's recommendations for stapling patterns for slope installations.

Perspective

Construction Notes:

1. Prepare soil before installing matting, including application of lime, fertilizer, and seed.
2. Begin at the top of the slope by anchoring the mat in a 6" deep X 6" wide trench. Backfill and compact trench after stapling.
3. Roll the mats (A) down or (B) horizontally across the slope.
4. The edges of parrallel mats must be stapled with approx. 2" overlap.
5. When mats must be spliced down the slope, place mats end over end (shingle style) with approx. 4" overlap. Staple through overlapped area, approx. 12" apart.

Source: Adapted from North American Green, Inc. | Symbol: SM-S | Detail No. **DE-ESC-3.4.6.1** Sheet 1 of 2 Effective FEB 2019

SOIL STABILIZATION MATTING TYPE 2 (SSM-II) SHALL BE USED FOR SLOPE STABILIZATION. EXAMPLE PRODUCTS INCLDUE NORTH AMERICAN GREEN S150BN AND/OR EAST COAST EROSION BLANKETS ECS-2B.

Standard Detail & Specifications
Stabilization Matting - Slope

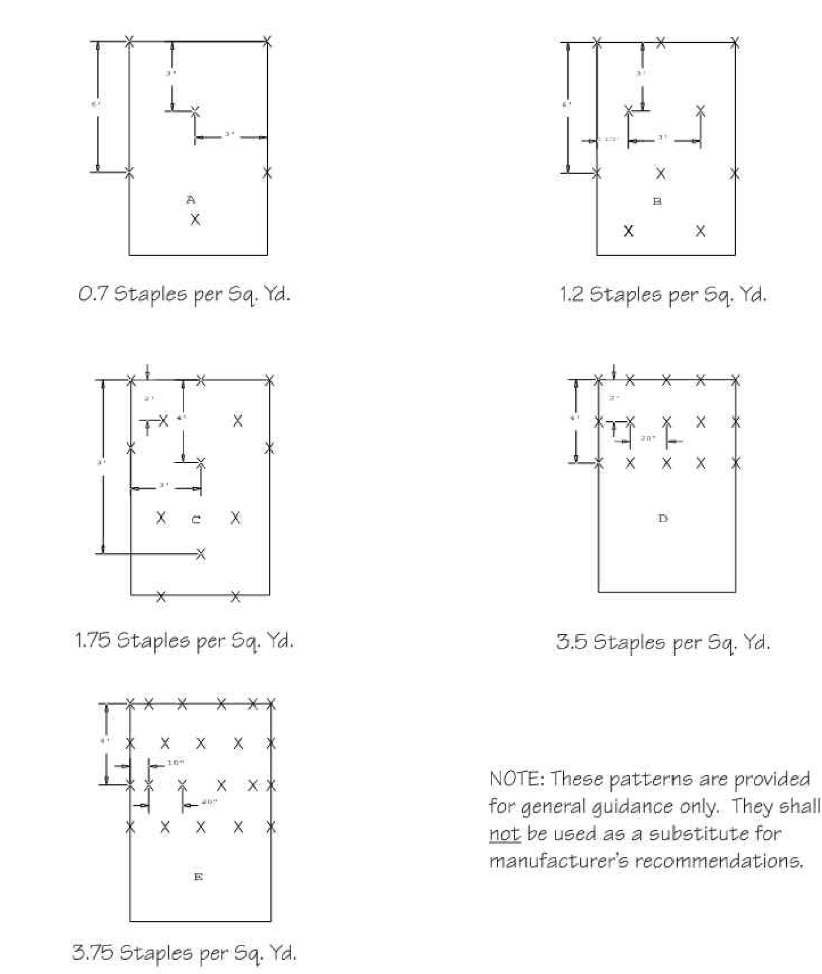

Stapling Patterns

Source: Adapted from North American Green, Inc. | Symbol: SM-S | Detail No. **DE-ESC-3.4.6.1** Sheet 2 of 2 Effective FEB 2019

REVISIONS: DATE: DESCRIPTION: BY:

AUBURN VALLEY STATE PARK
FARM LANE BRIDGE PHASE 2
EROSION AND SEDIMENT CONTROL DETAILS

SEAL: WALTER J. HOEY, III REGISTERED NO. 11204 DELAWARE PROFESSIONAL ENGINEER 8/19/2021

CIVIL ENGINEER: CENTURY ENGINEERING
CONSULTING ENGINEERS, SURVEYORS
550 S. BAY ROAD
DOVER, DELAWARE 19901
CONTRACT NO.: 175013.09

DELAWARE STATE PARKS — YOUR OUTDOOR ADVENTURE STARTS HERE

DESIGNED BY: WJH
DRAWN BY: ZTP/DLD
CHECKED BY: AES
DATE: AUGUST 2021
SCALE: NONE
SHEET NO.: ES504
CONTRACT NO.: NAT21021-AVFARMLANE

Standard Detail & Specifications

Construction Site Waste Mgt & Spill Control

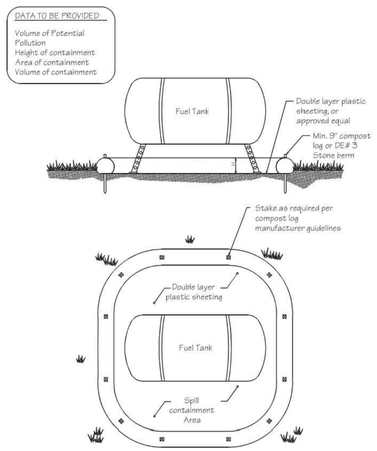

Source:	Symbol:	Detail No.
Delaware ESC Handbook		**DE-ESC-3.6.1** Sheet 1 of 5 Effective FEB 2019

Standard Detail & Specifications

Construction Site Waste Mgt & Spill Control

Pollution Prevention – Spill Prevention

1. Fueling should only take place in signed designated areas, away from downstream drainage facilities and watercourses.
2. Fueling must be with nozzles equipped with automatic shut-off to control drips. Do not top off.
3. Protect the areas where equipment or vehicles are being repaired, maintained, fueled or parked from storm water run-on and runoff.
4. Use barriers such as berms to prevent storm water run-on and runoff, and to contain spills.
5. Place a "Fueling Area" sign next to each fueling area.
6. Store hazardous materials such as fuel, solvents, oil and chemicals in secondary containment.
7. Inspect vehicles and equipment for leaks on each day of use. Repair fluid and oil leaks immediately.
8. Absorbent spill clean-up materials and spill kits must be available in fueling areas and on fuel trucks.
9. If fueling is to take place at night, make sure the fueling area is sufficiently illuminated.
10. Properly dispose of used oil, fluids, lubricants and spill clean-up materials.

CLEAN UP SPILLS

1. If it is safe to do so, immediately contain and clean up any chemical and/or hazardous material spills.
2. Properly dispose of used oil, fluids, lubricants and spill clean-up materials.
3. Do not bury spills or wash them down with water.

LEAKS AND DRIPS

1. Use drip pans or absorbent pads at all times. Place under and around leaky equipment.
2. Do not allow oil, grease, fuel or chemicals to drip onto the ground.
3. Have spill kits and clean up material on-site.
4. Repair leaky equipment promptly or remove problem vehicles and equipment from the site. Clean up contaminated soil immediately.
5. Store contaminated waste in sealed containers constructed of suitable material. Label these containers properly.
6. Clean up all spills and leaks. Promptly dispose of waste and spent clean up materials.

Source:	Symbol:	Detail No.
Delaware ESC Handbook		**DE-ESC-3.6.1** Sheet 2 of 5 Effective FEB 2019

Standard Detail & Specifications

Construction Site Waste Mgt & Spill Control

Notes:

The Construction Site Pollution Prevention Plan should include the following elements:

1. Material Inventory

Document the storage and use of the following materials:

a. Concrete
b. Detergents
c. Paints (enamel and latex)
d. Cleaning solvents
e. Pesticides
f. Wood scraps
g. Fertilizers
h. Petroleum based products

2. Good housekeeping practices

a. Store only enough product required to do the job.
b. All materials shall be stored in a neat, orderly manner in their original labeled containers and covered.
c. Substances shall not be mixed.
d. When possible, all of a product shall be used up prior to disposal of the container.
e. Manufacturers' instructions for disposal shall be strictly adhered to.
f. The site foreman shall designate someone to inspect all BMPs daily.

3. Waste management practices

a. All waste materials shall be collected and stored in securely lidded dumpsters in a location that does not drain to a waterbody.
b. Waste materials shall be salvaged and/or recycled whenever possible.
c. The dumpsters shall be emptied a minimum of twice per week, or more if necessary. The licensed trash hauler is responsible for cleaning out dumpsters.

Source:	Symbol:	Detail No.
Adapted from USEPA Pub. 840-B-92-002		**DE-ESC-3.6.1** Sheet 3 of 5 Effective FEB 2019

Standard Detail & Specifications

Construction Site Waste Mgt & Spill Control

Notes (cont.)

d. Trash shall be disposed of in accordance with all applicable Delaware laws.
e. Trash cans shall be placed at all lunch spots and littering is strictly prohibited. Recycle bins shall be placed near the construction trailer.
f. If fertilizer bags can not be stored in a weather-proof location, they shall be kept on a pallet and covered with plastic sheeting which is overlapped and anchored.

4. Equipment maintenance practices

a. If possible, equipment should be taken to off-site commercial facilities for washing and maintenance.
b. If performed on-site, vehicles shall be washed with high-pressure water spray without detergents in an area contained by an impervious berm.
c. Drip pans shall be used for all equipment maintenance.
d. Equipment shall be inspected for leaks on a daily basis.
e. Washout from concrete trucks shall be disposed of in a temporary pit for hardening and proper disposal.
f. Fuel nozzles shall be equipped with automatic shut-off valves.
g. All used products such as oil, antifreeze, solvents and tires shall be disposed of in accordance with manufacturers' recommendations and local, state and federal laws and regulations.

5. Spill prevention practices

a. Potential spill areas shall be identified and contained in covered areas with no connection to the storm drain system.
b. Warning signs shall be posted in hazardous material storage areas.
c. Preventive maintenance shall be performed on all tanks, valves, pumps, pipes and other equipment as necessary.
d. Low or non-toxic substances shall be prioritized for use.

Source:	Symbol:	Detail No.
Adapted from USEPA Pub. 840-B-92-002		**DE-ESC-3.6.1** Sheet 4 of 5 Effective FEB 2019

Standard Detail & Specifications

Construction Site Waste Mgt & Spill Control

Notes (cont.)

e. Contact information for reporting spills through the DNREC 24-Hour Toll Free Number shall be prominently posted.

6. Education

a. Best management practices for construction site pollution control shall be a part of regular progress meetings.
b. Information regarding waste management, equipment maintenance and spill prevention shall be prominently posted in the construction trailer.

CONTACT INFORMATION

DNREC 24-Hour Toll Free Number	**800-662-8802**
DNREC Solid & Hazardous Waste Management Section	**302-739-9403**

Source:	Symbol:	Detail No.
Adapted from USEPA Pub. 840-B-92-002		**DE-ESC-3.6.1** Sheet 5 of 5 Effective FEB 2019

Standard Detail & Specifications

Dust Control

Temporary Methods:

1. Mulches - See **DE-ESC-3.4.5**, Standard Detail and Specifications for Mulching.
2. Vegetative cover - See **DE-ESC-3.4.3**, Std. Detail and Specifications for Vegetative Stabilization.
3. Adhesives - Use on mineral soils only (not effective on muck soils). Keep traffic off these areas. The following table may be used for general guidance.

Type of Emulsion	Water Dilution	Type of Nozzle	Apply Gal/Ac.
Latex emulsion	12.5:1	Fine spray	235
Resin-in-water emulsion	4:1	Fine spray	300
Acrylic emulsion (non-trafffic)	7:1	Coarse spray	450
Acrylic emulsion (traffic)	3.5:1	Coarse spray	350

4. Tillage - For emergency temporary treatment, scarify the soil surface to prevent or reduce the amount of blowing dust until a more appropriate solution can be implemented. Begin the tillage operation on the windward side of the site using a chisel-type plow for best results.
5. Sprinkling - Sprinkle site with water until the surface is moist . Repeat as needed.
6. Calcium Chloride - Apply as flakes or granular material with a spreader at a rate that will keep the soil surface moist. Re-apply as necessary.
7. Barriers - Place barriers such as soild board fences, snow fences, hay bales, etc. at right angles to the prevailing air currents at intervals of approx. 10X their height.

Permanent Methods:

1. Vegetative cover - See **DE-ESC-3.4.3**, Std. Detail and Specifications for Vegetative Stabilization.
2. Stone - Apply layer of crushed stone or coarse gravel to protect soil surface.

Source:	Symbol:	Detail No.
Adapted from VA ESC Handbook		**DE-ESC-3.4.8** Sheet 1 of 1 Effective FEB 2019

Standard Detail & Specifications

Portable Sediment Tank

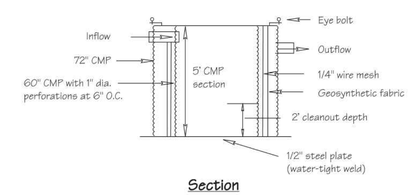

Section

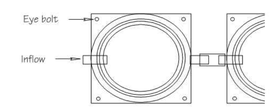

Plan

Construction Notes:

1. Required storage volume = 1 c.f. storage/1 gpm pump discharge.
2. Tanks may be connected in series to provide required storage.

Source:	Symbol:	Detail No.
Adapted from MD Stds. & Specs. for ESC	ST	**DE-ESC-3.2.1.1** Sheet 1 of 1 Effective FEB 2019

REVISIONS:

DATE:	DESCRIPTION:	BY:

AUBURN VALLEY STATE PARK
FARM LANE BRIDGE PHASE 2

EROSION AND SEDIMENT CONTROL DETAILS

SEAL:

WALTER J. HOEY III REGISTERED NO. 11204 DELAWARE PROFESSIONAL ENGINEER

8/19/2021

CIVIL ENGINEER:

CENTURY ENGINEERING
CONSULTING ENGINEERS, SURVEYORS
550 S. BAY ROAD
DOVER, DELAWARE 19901

CONTRACT NO.: 175013.09

DELAWARE STATE PARKS
YOUR OUTDOOR ADVENTURE STARTS HERE

DESIGNED BY: WJH

DRAWN BY: ZTP/DLD

CHECKED BY: AES

DATE: AUGUST 2021

SCALE: NONE

SHEET NO.: ES505

CONTRACT NO.: NAT21021-AVFARMLANE

G:\Projects\175013.00 (DNREC 2017 Engineering IQC)\175013.09 (Farm Lane Bridge)\CADD FILES Z:\SHEETS\EROSION AND SEDIMENT CONTROL PLAN\ES505-Erosion and Sediment Control Details.dwg, 8/20/2021 11:48 AM

Standard Detail & Specifications
Sensitive Area Protection

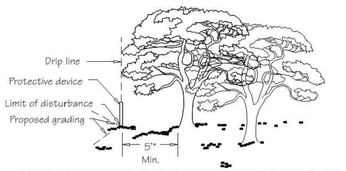

*5' min. setback applies to all sensitve areas covered by this specification.

Location of Sensitive Area Protection

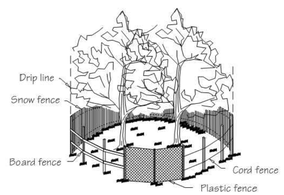

Methods of Sensitive Area Protection

Source:	Symbol:	Detail No.
Adapted from VA ESC Handbook	SAP	DE-ESC-3.7.2 Sheet 1 of 3 Effective FEB 2019

Standard Detail & Specifications
Sensitive Area Protection

Construction Notes:

Fencing shall be installed at the extents of all sensitive areas. For trees, the fencing shall be installed outside the dripline (mature canopy) and at no time within 5 feet of the trunk. Personnel must be instructed to honor protective devices. The devices described are suggested only, and are not intended to exclude the use of other devices which will protect the trees to be retained. If silt fence is to be used for demarcation purposes, appropriate signage shall be provided a minimum of every 20 feet denoting the area as a sensitive area protection zone.

Materials:

1. Snow Fence - Standard 40-inch high snow fence shall be placed at the limits of clearing or construction on standard steel posts set 6 feet apart.

2. Board Fence - Board fencing consisting of 4-inch square posts set securely in the ground and protruding at least 4 feet above the ground shall be placed at the limits of clearing with a minimum of two horizontal boards between posts. For tree proteciton, if it is not practical to erect a fence at the drip line, construct a triangular fence nearer the trunk. The limits of clearing will still be located at the drip line, since the root zone within the drip line will still require protection.

3. Plastic Fencing - 40-inch high "international orange" plastic (polyethylene) web fencing secured to conventional metal "T" or "U" posts driven to a minimum depth of 18 inches on 6-foot minimum centers shall be installed at the limits of clearing. The fence should have the following minimum physical qualities:

   a. Tensile yield: Average 2,000 lbs. per 4-foot width (ASTM D638)

   b. Ultimate tensile yield: Average 2,900 lbs. per 4-foot width (ASTM D638)

   c. Elongation at break (%): Greater than 1000% (ASTM D638)

   d. Chemical resistance: Inert to most chemicals and acids

Source:	Symbol:	Detail No.
Adapted from VA ESC Handbook	SAP	DE-ESC-3.7.2 Sheet 2 of 3 Effective FEB 2019

Standard Detail & Specifications
Sensitive Area Protection

4. Cord Fence - Posts with a minimum size of 2 inches square or 2 inches in diameter set securely in the ground and protruding at least 4 feet above the ground shall be placed at the limits of clearing with two rows of cord 1/4-inch or thicker at least 2 feet apart running between posts with strips of colored surveyor's flagging tied securely to the string at intervals no greater than 3 feet.

5. Earth Berms - Temporary earth berms shall be constructed according to specifications for a Temporary Earth Dike with the base of the berm on the sensitive area side located along the limits of clearing. Earth berms may not be used for this purpose if their presence will conflict with drainage patterns.

6. Trunk Armoring (Tree Protection Only) - As a last resort, a tree trunk can be armored with burlap wrapping and 2-inch studs wired vertically no more than 2 inches apart to a height of 5 feet encircling the trunk. If this alternative is used, the root zone within the drip line will still require protection. Nothing should ever be nailed to a tree.

Maintenance:

Fencing and armoring devices shall be in place before any excavation or grading is begun, shall be kept in good repair for the duration of construction activities, and shall be the last items removed during the final cleanup after the completion of the project.

Source:	Symbol:	Detail No.
Adapted from VA ESC Handbook	SAP	DE-ESC-3.7.2 Sheet 3 of 3 Effective FEB 2019

REVISIONS:

DATE:	DESCRIPTION:	BY:

AUBURN VALLEY STATE PARK
FARM LANE BRIDGE PHASE 2

EROSION AND SEDIMENT CONTROL DETAILS

SEAL:

WALTER J. HOEY III
REGISTERED
NO. 11204
DELAWARE
PROFESSIONAL ENGINEER

8/19/2021

CIVIL ENGINEER:

CENTURY ENGINEERING
CONSULTING ENGINEERS, SURVEYORS
550 S. BAY ROAD
DOVER, DELAWARE 19901

CONTRACT NO.: 175013.09

DELAWARE STATE PARKS
YOUR OUTDOOR ADVENTURE STARTS HERE

DESIGNED BY: WJH

DRAWN BY: ZTP/DLD

CHECKED BY: AES

DATE: AUGUST 2021

SCALE: NONE

SHEET NO.: ES506

CONTRACT NO.: NAT21021-AVFARMLANE

G:\Projects\175013.00 (DNREC 2017 Engineering IQC)\175013.09 (Farm Lane Bridge)\CADD FILES Z\SHEETS\EROSION AND SEDIMENT CONTROL PLAN\ES506-Erosion and Sediment Control Details.dwg, 8/20/2021 11:48 AM

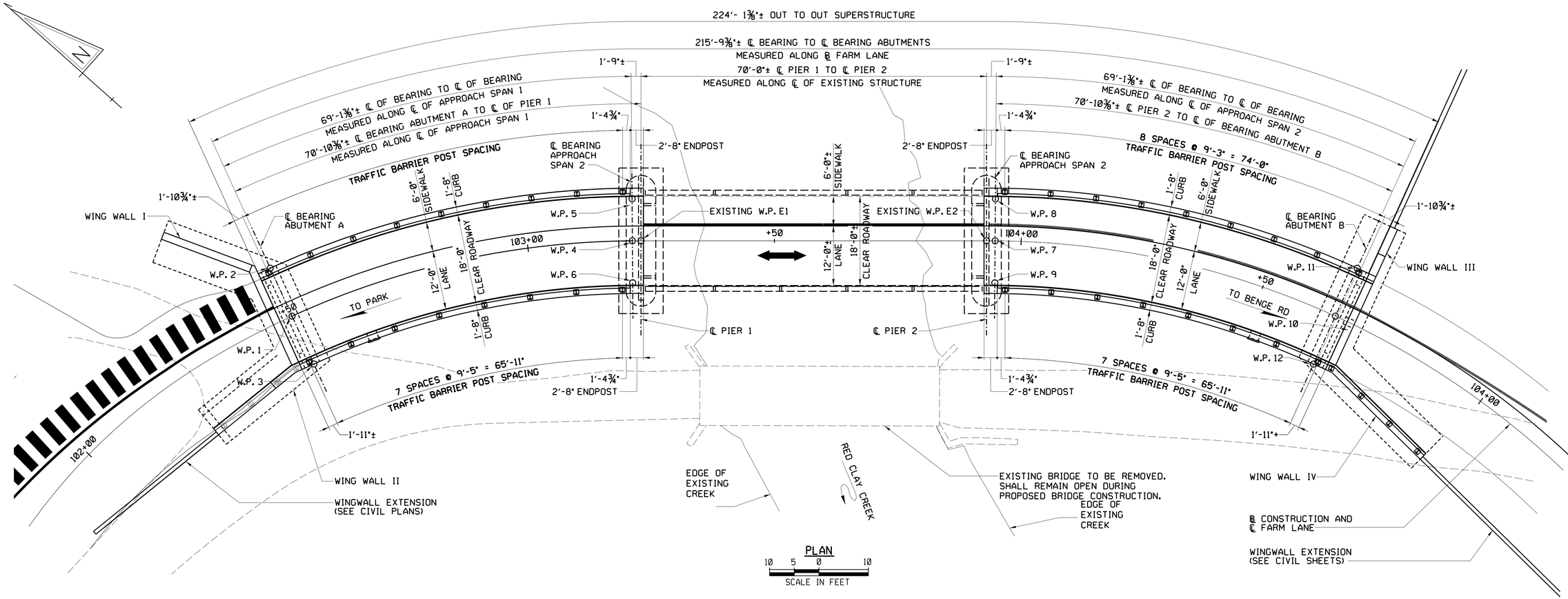

PLAN

10 5 0 10
SCALE IN FEET

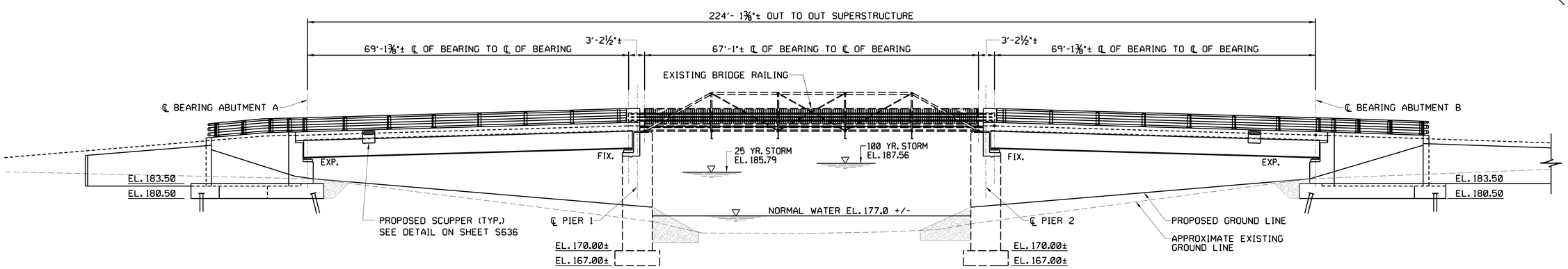

ELEVATION

10 5 0 10
SCALE IN FEET

SCOUR ANALYSIS :

A. SCOUR DESIGN FREQUENCY : (100-YEAR)
B. SCOUR DESIGN FLOOD DISCHARGE : 8,760 C.F.S.
C. SCOUR DESIGN FLOOD VELOCITY : 4.97 F.P.S
D. WATER SURFACE ELEVATION : 187.78 FT.
E. CALCULATED SCOUR DEPTH AT EACH SUBSTRUCTURE UNIT :
   1. ABUTMENT A: 16.5 FT.
      ABUTMENT B: 19.5 FT.
   2. PIER : 16.0 FT.
F. SCOUR COUNTERMEASURES HAVE BEEN DESIGNED FOR THE SCOUR DESIGN FLOOD IN ACCORDANCE WITH THE HEC 23-BRIDGE SCOUR AND STREAM INSTABILITY COUNTERMEASURES.

REVISIONS:

DATE:	DESCRIPTION:	BY:

NVF AUBURN HEIGHTS STATE PARK
FARM LANE BRIDGE REPLACEMENT

BRIDGE PLAN AND ELEVATION

SI

WALTER J. HOEY, III
LICENSE
No. 11204
DELAWARE
PROFESSIONAL ENGINEER
8/13/2021

CIVIL ENGINEER:

CENTURY ENGINEERING
CONSULTING ENGINEERS, SURVEYORS
550 BAY ROAD
DOVER, DELAWARE 19901

CONTRACT NO.: 175013.09

DESIGNED BY: BMC
DRAWN BY: BMC
CHECKED BY: TSW
DATE: OCTOBER 2020
SCALE: AS NOTED
SHEET NO.: S601
CONTRACT NO.:

STRUCTURAL GENERAL NOTES

CONSTRUCTION SPECIFICATIONS

1. PROVIDE MATERIAL AND PERFORM WORK IN ACCORDANCE TO THE DELAWARE DEPARTMENT OF TRANSPORTATION (DELDOT) STANDARD SPECIFICATIONS (AUGUST 2016), CONSTRUCTION DETAILS, AND CONTRACT SPECIAL PROVISIONS.

DESIGN SPECIFICATIONS

1. DELDOT BRIDGE DESIGN MANUAL, 2017 EDITION.
2. AASHTO LRFD BRIDGE SPECIFICATIONS, 2014, 7TH EDITION, CUSTOMARY U.S. UNITS INCLUDING 2015 AND 2016 INTERIMS.

LOADING

1. HL-93 WITH PROVISION FOR 2" FUTURE WEARING SURFACE
2. PEDESTRIAN LIVE LOAD = 90 PSF.
3. HORIZONTAL LOADS ARE IN ACCORDANCE WITH AASHTO.

EXISTING CONDITIONS

1. ALL EXISTING DIMENSIONS AND ELEVATIONS SHOWN ARE BASED ON THE BEST AVAILABLE INFORMATION AND ARE APPROXIMATE ONLY. THE CONTRACTOR SHALL FIELD VERIFY ALL EXISTING DIMENSIONS, GEOMETRY, AND ELEVATIONS AS NECESSARY PRIOR TO ORDERING ANY MATERIALS AND COMMENCING CONSTRUCTION TO ENSURE PROPER FIT OF THE PROPOSED CONSTRUCTION.

UTILITIES

1. BEFORE BEGINNING WORK, THE CONTRACTOR SHALL GIVE NOTIFICATION BY TELEPHONE BY CALLING "MISS UTILITY" AT 1-800-282-8555 A MINIMUM OF 48 HOURS PRIOR TO START OF WORK. VERIFY AND LOCATE ALL UTILITIES PRIOR TO STARTING WORK.
2. COORDINATE THE REQUIREMENTS FOR PROTECTION OF ANY UTILITIES WITH THE UTILITY OWNER PRIOR TO STARTING WORK.
3. CONDUCT OPERATIONS IN A MANNER WHICH ENSURES THAT THE UTILITIES WILL NOT BE DISTURBED OR ENDANGERED. ANY DAMAGE INCURRED TO THESE UTILITIES OR ANY OTHER UTILITIES, SHOWN OR NOT SHOWN ON THE PLANS, DUE TO THE CONTRACTOR'S OPERATIONS SHALL BE REPAIRED AT THE CONTRACTOR'S EXPENSE TO THE SATISFACTION OF THE APPROPRIATE UTILITY COMPANY. DNREC DOES NOT ASSUME RESPONSIBILITY FOR REIMBURSEMENT, PARTICIPATION IN DESIGN AND/OR REVISIONS, OR LIABILITY FOR ACCURACY OF TYPE, SIZE AND LOCATION OF THAT UTILITY.
4. THE CONTRACTOR IS RESPONSIBLE FOR TEMPORARILY SUPPORTING, PROTECTING, OR RELOCATING ANY UTILITIES DURING CONSTRUCTION. WHERE NECESSARY, THE COST FOR THIS WORK WILL BE INCIDENTAL TO THE CONTRACT.

CEMENT CONCRETE

1. USE PORTLAND CEMENT CONCRETE (f'c = 28 DAY COMPRESSIVE STRENGTH) FOR CAST-IN-PLACE ELEMENTS AS FOLLOWS :
   - CLASS A - ABUTMENT BACKWALL, ABUTMENT CROSS BEAM, BRIDGE DECK, END DIAPHRAGMS, BRIDGE CURB AND ENDPOST (f'c = 4.5 KSI).
   - CLASS B - ABUTMENT FOOTING, ABUTMENT STEM, PIER BEAM SEAT (f'c = 3.0 KSI)
   - CLASS C - NOT USED (f'c = 2.0 KSI)
   - CLASS D - NOT USED (f'c = 4.5 KSI)
2. CHAMFER ALL EXPOSED EDGES ¾" x ¾" UNLESS OTHERWISE NOTED.
3. CONCRETE SEALER LIMITS SHOWN IN THE PLANS SHALL BE INCIDENTAL TO THE CONCRETE ITEM BEING PROTECTED. CONCRETE SEALER SHALL MEET SECTION 613 OF THE STANDARD SPECIFICATIONS.

BAR REINFORCEMENT

1. REINFORCING STEEL SHALL CONFORM TO AASHTO M31 (ASTM A615), GRADE 60.
2. REINFORCING STEEL SHALL HAVE A 3" CLEAR COVER IF CAST AGAINST EARTH OR A 2" CLEAR COVER ELSEWHERE, UNLESS OTHERWISE SPECIFIED ON THE PLANS.
3. ALL REINFORCING STEEL SHALL BE PROTECTED WITH FUSION BONDED EPOXY. EPOXY COATED REINFORCING STEEL SHALL CONFORM TO AASHTO M284 (ASTM D3963).
4. ANY FIELD CUTTING OR FIELD BENDING MUST BE APPROVED BY THE ENGINEER.
5. GALVANIZED REINFORCING STEEL MAY BE SUBSTITUTED FOR EPOXY COATED REINFORCING STEEL AT NO ADDITIONAL COST TO DNREC WITH APPROVAL OF THE ENGINEER.
6. WELDING OF THE REINFORCING STEEL DURING FABRICATION OR CONSTRUCTION IS NOT PERMITTED UNLESS SPECIFIED.
7. LAPS AND DEVELOPMENT LENGTHS NOT SHOWN SHALL BE PER AASHTO LRFD BRIDGE DESIGN SPECIFICATIONS.
8. CONCRETE FINISHING SHALL BE PER THE DELDOT STANDARD SPECIFICATIONS.

STRUCURAL STEEL

1. STRUCTURAL STEEL SHALL CONFORM TO AASHTO M270, GRADE 50 DESIGNATION.
2. ALL FASTENERS ARE ⅞" DIAMETER ASTM A325 HIGH STRENGTH BOLTS, TYPE 1 OR 3 UNLESS OTHERWISE NOTED.
3. GIRDER WEBS SHALL BE ERECTED IN THE STEEL DEAD LOAD FIT CONDITION AS DESCRIBED IN SECTION 106.8.9.1.3 OF THE DELDOT BRIDGE DESIGN MANUAL.
4. CORRUGATED STEEL STAY-IN-PLACE FORMS ARE ALLOWED ON THIS PROJECT EXCEPT WHERE NOTED OTHERWISE. NO ADDITIONAL COMPENSATION SHALL BE PROVIDED FOR ADDITIONAL CONCRETE WHERE STAY-IN-PLACE FORMS ARE USED.

BEARINGS

1. FOR BEARING GENERAL NOTES, SEE SHEET S622.

REFERENCE DRAWINGS

1. DRAWINGS FOR THE SUPERSTRUCTURE OF THE EXISTING STRUCTURE, PREPARED BY THE SCHIFFER GROUP, INC., ARE PROVIDED FOR REFERENCE ONLY. THE SUPERSTRUCTURE IS TO BE INSTALLED BY OTHERS AND IS NOT PART OF THIS CONTRACT. SEE COORDINATION REQUIREMENTS ELSEWHERE IN THE CONTRACT DOCUMENTS.

GENERAL

1. ALL DIMENSIONS SHOWN ARE HORIZONTAL EXCEPT AS NOTED.
2. STRUCTURE BACKFILL SHALL CONFORM TO THE REQUIREMENTS OF DELDOT BORROW TYPE C.
3. THE CONTRACTOR IS RESPONSIBLE FOR THE STABILITY OF ALL EXCAVATED SLOPES. DIRECT ALL SURFACE RUNOFF AWAY FROM EXCAVATION USING CURBING OR A BARRIER ALONG TOP OF SLOPE. IF REQUIRED, COVER THE EXCAVATED SLOPES WITH PLASTIC TO PROTECT AGAINST INFILTRATION.
4. THE FOLLOWING LEGEND APPLIES TO ALL DRAWINGS :

F.F. = FRONT FACE	T = TOP	C/C = CENTER TO CENTER
R.F. = REAR FACE	B = BOTTOM	OHW = ORDINARY HIGH WATER
E.F. = EACH FACE	FIX. = FIXED BEARINGS	ℬ = BASELINE
CLR. = CLEAR	EXP. = EXPANSION BEARINGS	℄ = CENTERLINE
MIN. = MINIMUM	W.P. = WORK POINT	EL. = ELEVATION
MAX. = MAXIMUM	SPA. = SPACES	
STA. = STATION	BRGS. = BEARINGS	
TYP. = TYPICAL	JT. = JOINT	

FOUNDATION NOTES

1. GROUNDWATER WILL LIKELY BE ENCOUNTERED DURING EXCAVATION FOR THE FOUNDATIONS. WHEN GROUNDWATER IS ENCOUNTERED, APPROPRIATE DEWATERING SHALL BE CARRIED OUT SO THAT CONSTRUCTION IS PERFORMED IN A DRY CONDITION. COST FOR DETWATERING SHALL BE INCLUDED IN THE LUMP SUM PRICE BID FOR THE PROJECT.
2. CONTRACTOR SHALL BE RESPONSIBLE FOR THE DESIGN AND CONSTRUCTION OF TEMPORARY SUPPORT AND EXCAVATION WHERE REQUIRED. CONTRACTOR SHALL SUBMIT SHOP DRAWINGS AND DESIGN COMPUTATIONS SEALED BY A PROFESSIONAL ENGINEER LICENSED IN THE STATE OF DELAWARE FOR REVIEW AND APPROVAL.

MICROPILE NOTES

1. MICROPILE DESIGN BASED ON FHWA; MICROPILE DESIGN AND CONSTRUCTION MANUAL DATED 2005 AND AASHTO LRFD BRIDGE DESIGN SPECIFICATIONS 8TH EDITION.

CLASS B CONCRETE BAR LAPS

BAR SIZE	CENTER TO CENTER SPACING							
	3"		4"		5"		≥ 6"	
#4	3'-1"	2'-9"	2'-10"	2'-2"	2'-10"	2'-2"	2'-10"	2'-2"
#5	4'-0"	3'-7"	3'-10"	3'-5"	3'-7"	2'-9"	3'-7"	2'-9"
#6	5'-9"	5'-1"	4'-8"	4'-1"	4'-8"	4'-1"	4'-8"	4'-1"
#7	7'-10"	6'-9"	5'-11"	5'-1"	5'-5"	4'-8"	5'-5"	4'-8"
#8	10'-3"	9'-1"	7'-8"	6'-10"	6'-2"	5'-5"	6'-2"	5'-5"
#9	13'-0"	11'-6"	9'-9"	8'-8"	7'-10"	6'-11"	7'-8"	6'-9"
#10	-	-	12'-5"	10'-11"	9'-11"	8'-9"	9'-5"	8'-4"
#11	-	-	15'-3"	13'-6"	12'-3"	10'-9"	11'-4"	10'-10"

= BARS IN HORIZONTAL LAYERS WITH 12" OR MORE OF CONCRETE BELOW

= ALL OTHER BARS

CLASS A AND CLASS D CONCRETE BAR LAPS

BAR SIZE	CENTER TO CENTER SPACING							
	3"		4"		5"		≥ 6"	
#4	2'-8"	2'-5"	2'-6"	1'-11"	2'-6"	1'-11"	2'-6"	1'-11"
#5	3'-6"	3'-1"	3'-4"	3'-0"	3'-1"	2'-5"	3'-1"	2'-5"
#6	5'-0"	4'-5"	4'-0"	3'-7"	4'-0"	3'-7"	4'-0"	3'-7"
#7	6'-10"	6'-0"	5'-1"	4'-6"	4'-8"	4'-2"	4'-8"	4'-2"
#8	8'-11"	7'-10"	6'-8"	5'-11"	5'-4"	4'-9"	5'-4"	4'-9"
#9	11'-3"	10'-0"	8'-6"	7'-6"	6'-9"	6'-0"	6'-7"	5'-10"
#10	-	-	10'-9"	9'-6"	8'-7"	7'-7"	8'-2"	7'-2"
#11	-	-	13'-3"	11'-8"	10'-7"	9'-4"	9'-9"	8'-8"

= BARS IN HORIZONTAL LAYERS WITH 12" OR MORE OF CONCRETE BELOW

= ALL OTHER BARS

REVISIONS:

DATE:	DESCRIPTION:	BY:

NVF AUBURN HEIGHTS STATE PARK
FARM LANE BRIDGE REPLACEMENT

STRUCTURAL GENERAL NOTES

SI

WALTER J. HOEF, III
LICENSE
No. 11204
DELAWARE
PROFESSIONAL ENGINEER
8/19/2021

CIVIL ENGINEER:
CENTURY ENGINEERING
CONSULTING ENGINEERS, SURVEYORS
550 BAY ROAD
DOVER, DELAWARE 19901

CONTRACT NO.: 175013.09

DESIGNED BY: CAP
DRAWN BY: BMC
CHECKED BY: TSW
DATE: OCTOBER 2020
SCALE: AS NOTED
SHEET NO.: S602
CONTRACT NO.:

WORKING POINTS				
W.P.	STATION	OFFSET	NORTHING	EASTING
1	102+50.08	0.00	658758.1055	581745.6072
2	102+50.08	10.67 LT.	658767.8668	581749.9079
3	102+50.08	10.67 RT.	658748.3443	581741.3065
4	103+21.22	0.00	658716.7624	581802.8533
5	103+21.22	8.67 LT.	658722.4615	581809.1596
6	103+21.22	8.67 RT.	658711.0633	581796.5469
7	103+94.72	0.00	658661.8702	581851.7316
8	103+94.72	8.67 LT.	658667.4753	581858.1216
9	103+94.72	8.67 RT.	658656.2637	581845.3427
10	104+65.86	0.00	658600.2295	581886.1784
11	104+65.86	10.67 LT.	658603.3729	581896.3714
12	104+65.86	10.67 RT.	658597.0861	581875.9854

EXISTING WORKING POINTS				
W.P.	STATION	OFFSET	NORTHING	EASTING
E1	103+22.8	0.00	658715.4574	581804.0186
E2	103+92.8	0.00	658663.1791	581850.5695

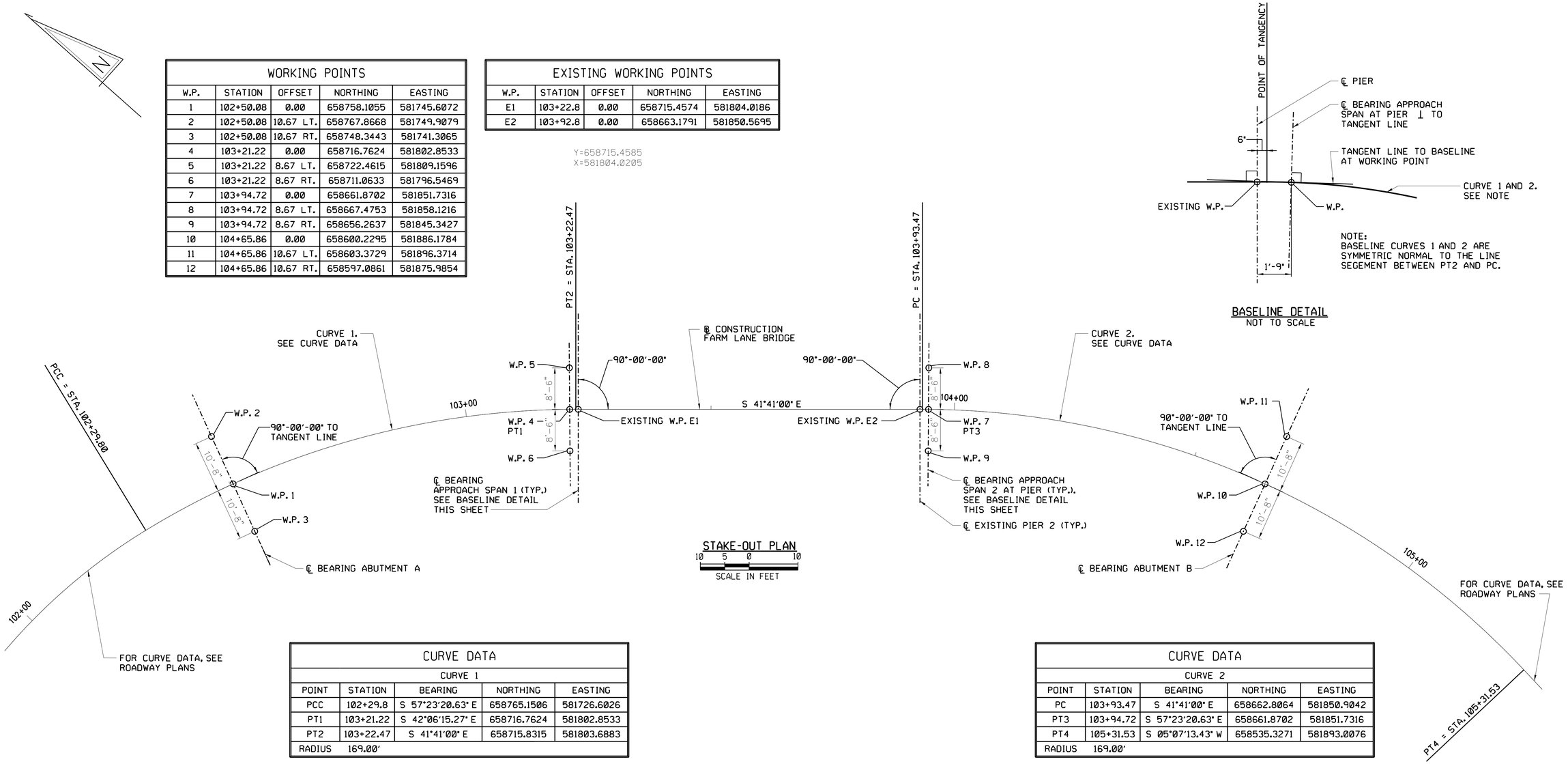

STAKE-OUT PLAN

10 5 0 10

SCALE IN FEET

NOTE:
BASELINE CURVES 1 AND 2 ARE SYMMETRIC NORMAL TO THE LINE SEGEMENT BETWEEN PT2 AND PC.

BASELINE DETAIL

NOT TO SCALE

CURVE DATA				
CURVE 1				
POINT	STATION	BEARING	NORTHING	EASTING
PCC	102+29.8	S 57°23'20.63" E	658765.1506	581726.6026
PT1	103+21.22	S 42°06'15.27" E	658716.7624	581802.8533
PT2	103+22.47	S 41°41'00" E	658715.8315	581803.6883
RADIUS	169.00'			

CURVE DATA				
CURVE 2				
POINT	STATION	BEARING	NORTHING	EASTING
PC	103+93.47	S 41°41'00" E	658662.8064	581850.9042
PT3	103+94.72	S 57°23'20.63" E	658661.8702	581851.7316
PT4	105+31.53	S 05°07'13.43" W	658535.3271	581893.0076
RADIUS	169.00'			

CURVE DATA		
	CURVE 1	CURVE 2
RADIUS	169.00'	169.00'
ARC	92.67'	138.06'
DELTA	31°25'03.36"	46°48'21.96"
TANGENT	47.52'	73.16'
CHORD	91.51'	134.25'
CHORD BEARING	S 57°23'20.63" E	S 18°16'37.79" E

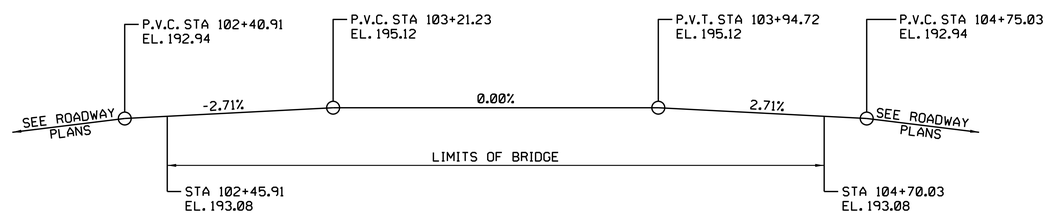

VERTICAL CURVE DATA

NOT TO SCALE

REVISIONS:

DATE:	DESCRIPTION:	BY:

NVF AUBURN HEIGHTS STATE PARK
FARM LANE BRIDGE REPLACEMENT

STAKE-OUT PLAN

SI

WALTER J. HOEY, III
LICENSE
No. 11204
DELAWARE
PROFESSIONAL ENGINEER
8/19/2021

CIVIL ENGINEER:

CENTURY ENGINEERING
CONSULTING ENGINEERS, SURVEYORS
550 BAY ROAD
DOVER, DELAWARE 19901

CONTRACT NO.: 175013.09

DESIGNED BY: BMC

DRAWN BY: BMC

CHECKED BY: TSW

DATE: OCTOBER 2020

SCALE: AS NOTED

SHEET NO.: S603

CONTRACT NO.:

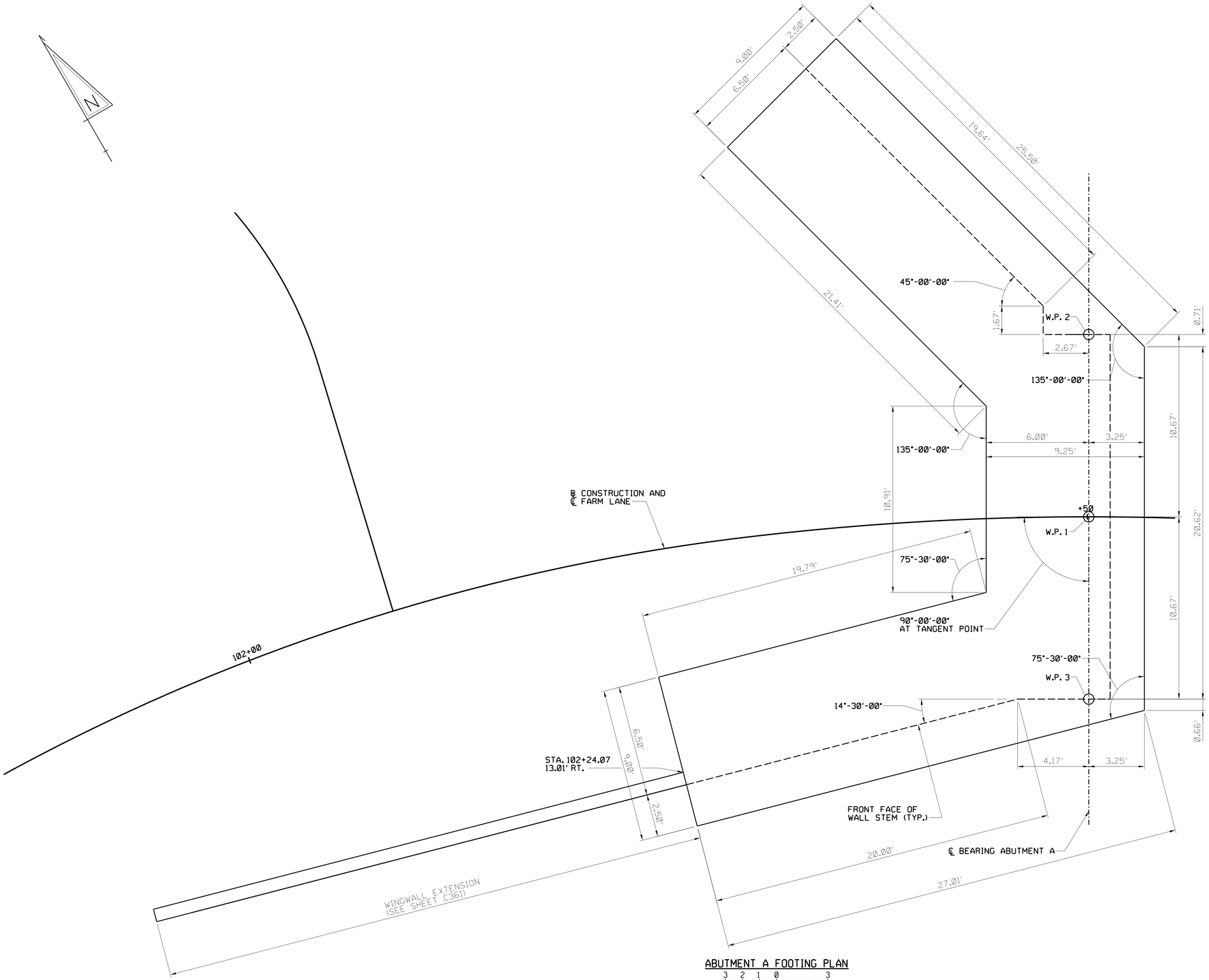

ABUTMENT A FOOTING PLAN

3 2 1 0 3

SCALE IN FEET

NOTE:

ALL FOOTING CORNERS ARE 90°-00'-00" UNLESS OTHERWISE NOTED

REVISIONS:

DATE:	DESCRIPTION:	BY:

NVF AUBURN HEIGHTS STATE PARK
FARM LANE BRIDGE REPLACEMENT

ABUTMENT A FOOTING PLAN

SI

WALTER J. HOEY, III
LICENSE
No. 11204
DELAWARE
PROFESSIONAL ENGINEER

8/19/2021

CIVIL ENGINEER:

CENTURY ENGINEERING
CONSULTING ENGINEERS, SURVEYORS
550 BAY ROAD
DOVER, DELAWARE 19901

CONTRACT NO.: 175013.09

DESIGNED BY: BMC

DRAWN BY: BMC

CHECKED BY: TSW

DATE: OCTOBER 2020

SCALE: AS NOTED

SHEET NO.: S605

CONTRACT NO.:

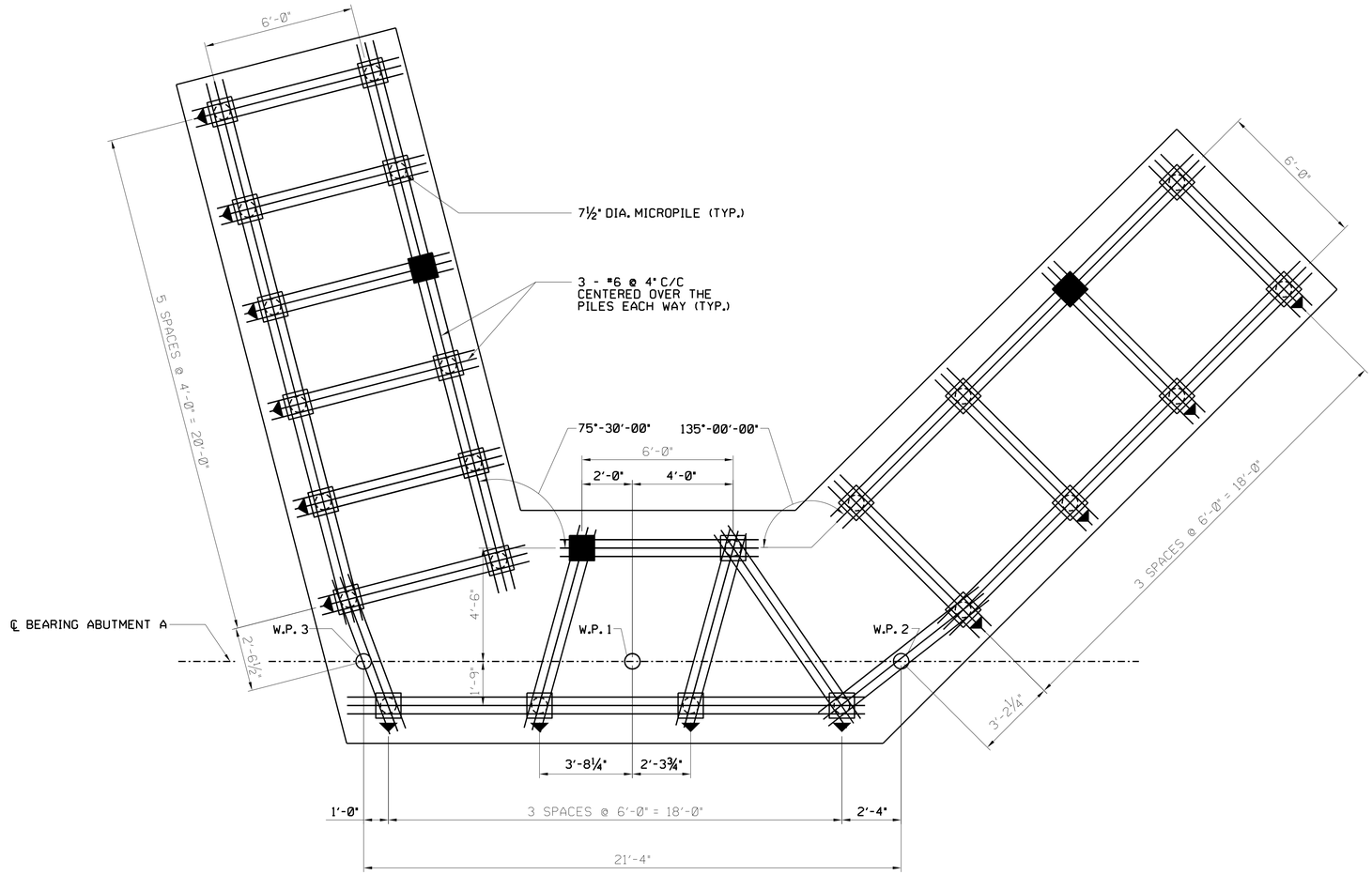

ABUTMENT A PILE PLAN

3 2 1 0 3

SCALE IN FEET

LEGEND

- DENOTES PLUMB PILE
- DENOTES BATTERED PILE AND DIRECTION OF BATTER (4:1 BATTER)
- DENOTES PILE FOR VERIFICATION TEST
- DENOTES PILE FOR PROOF TEST

PILE NOTES:

1. THE ESTIMATED PILE TIP ELEVATION = 140.5'
2. THE FACTORED AXIAL CAPACITY OF THE 7.5" DIAMETER GRAVITY GROUT MICROPILE IS 200 KIPS.
3. VERIFICATION TESTS AND PROOF TESTS FOR MICROPILES ARE INCIDENTAL TO THE MICROPILE ITEM.

REVISIONS:

DATE:	DESCRIPTION:	BY:

NVF AUBURN HEIGHTS STATE PARK
FARM LANE BRIDGE REPLACEMENT

ABUTMENT A FOOTING REINFORCEMENT PLAN

SI

WALTER J. HOEY, III
LICENSE
No. 11204
DELAWARE
PROFESSIONAL ENGINEER
8/19/2021

CIVIL ENGINEER:

CENTURY ENGINEERING
CONSULTING ENGINEERS, SURVEYORS
550 BAY ROAD
DOVER, DELAWARE 19901

CONTRACT NO.: 175013.09

DESIGNED BY: BMC

DRAWN BY: BMC

CHECKED BY: TSW

DATE: OCTOBER 2020

SCALE: AS NOTED

SHEET NO.: S606

CONTRACT NO.:

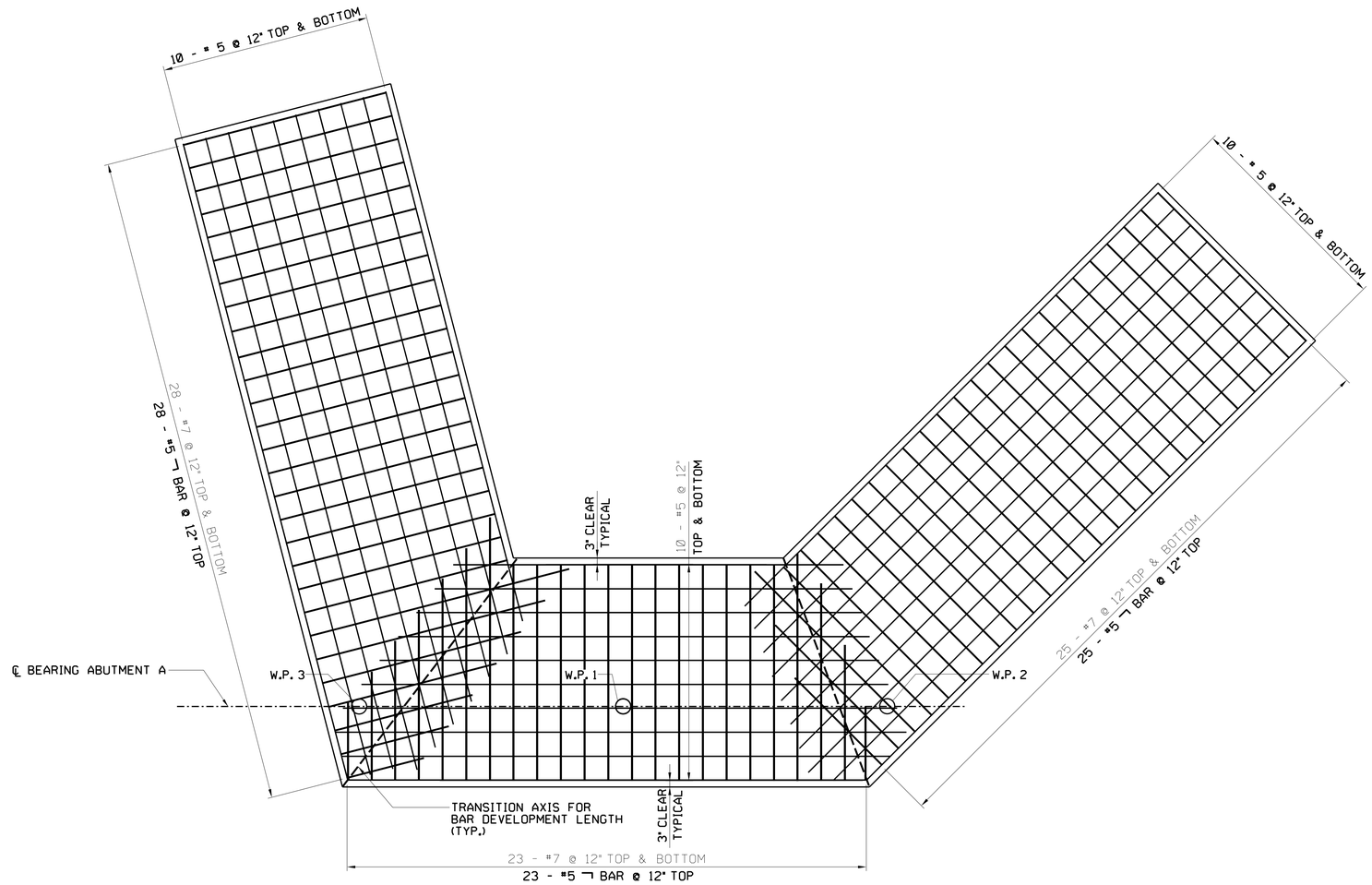

ABUTMENT A FOOTING REINFORCEMENT PLAN

3 2 1 0 3

SCALE IN FEET

REVISIONS:

DATE:	DESCRIPTION:	BY:

NVF AUBURN HEIGHTS STATE PARK FARM LANE BRIDGE REPLACEMENT

ABUTMENT A FOOTING REINFORCEMENT PLAN

SI

WALTER J. HOEY, III
LICENSE
No. 11204
DELAWARE
PROFESSIONAL ENGINEER
8/19/2021

CIVIL ENGINEER:

CENTURY ENGINEERING
CONSULTING ENGINEERS, SURVEYORS
550 BAY ROAD
DOVER, DELAWARE 19901

CONTRACT NO.: 175013.09

DESIGNED BY: BMC

DRAWN BY: BMC

CHECKED BY: TSW

DATE: OCTOBER 2020

SCALE: AS NOTED

SHEET NO.: S607

CONTRACT NO.:

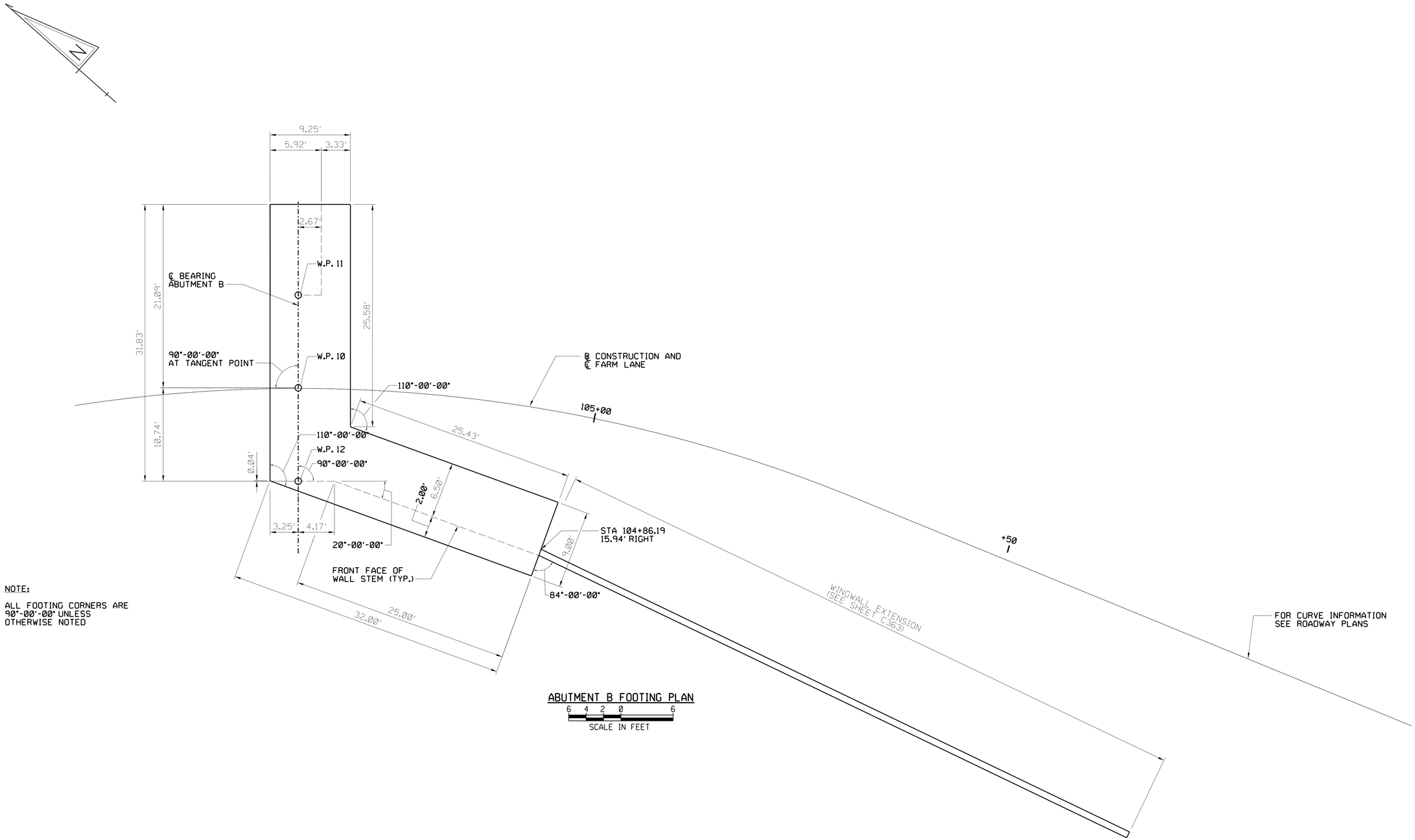

NOTE:

ALL FOOTING CORNERS ARE 90°-00'-00" UNLESS OTHERWISE NOTED

ABUTMENT B FOOTING PLAN

6 4 2 0 6

SCALE IN FEET

REVISIONS:

DATE:	DESCRIPTION:	BY:

NVF AUBURN HEIGHTS STATE PARK
FARM LANE BRIDGE REPLACEMENT

ABUTMENT B FOOTING PLAN

SI

WALTER J. HOEY, III
LICENSE
No. 11204
DELAWARE
PROFESSIONAL ENGINEER
8/13/2021

CIVIL ENGINEER:

CENTURY ENGINEERING
CONSULTING ENGINEERS, SURVEYORS
550 BAY ROAD
DOVER, DELAWARE 19901

CONTRACT NO.: 175013.09

DESIGNED BY: BMC

DRAWN BY: BMC

CHECKED BY: TSW

DATE: OCTOBER 2020

SCALE: AS NOTED

SHEET NO.: S608

CONTRACT NO.:

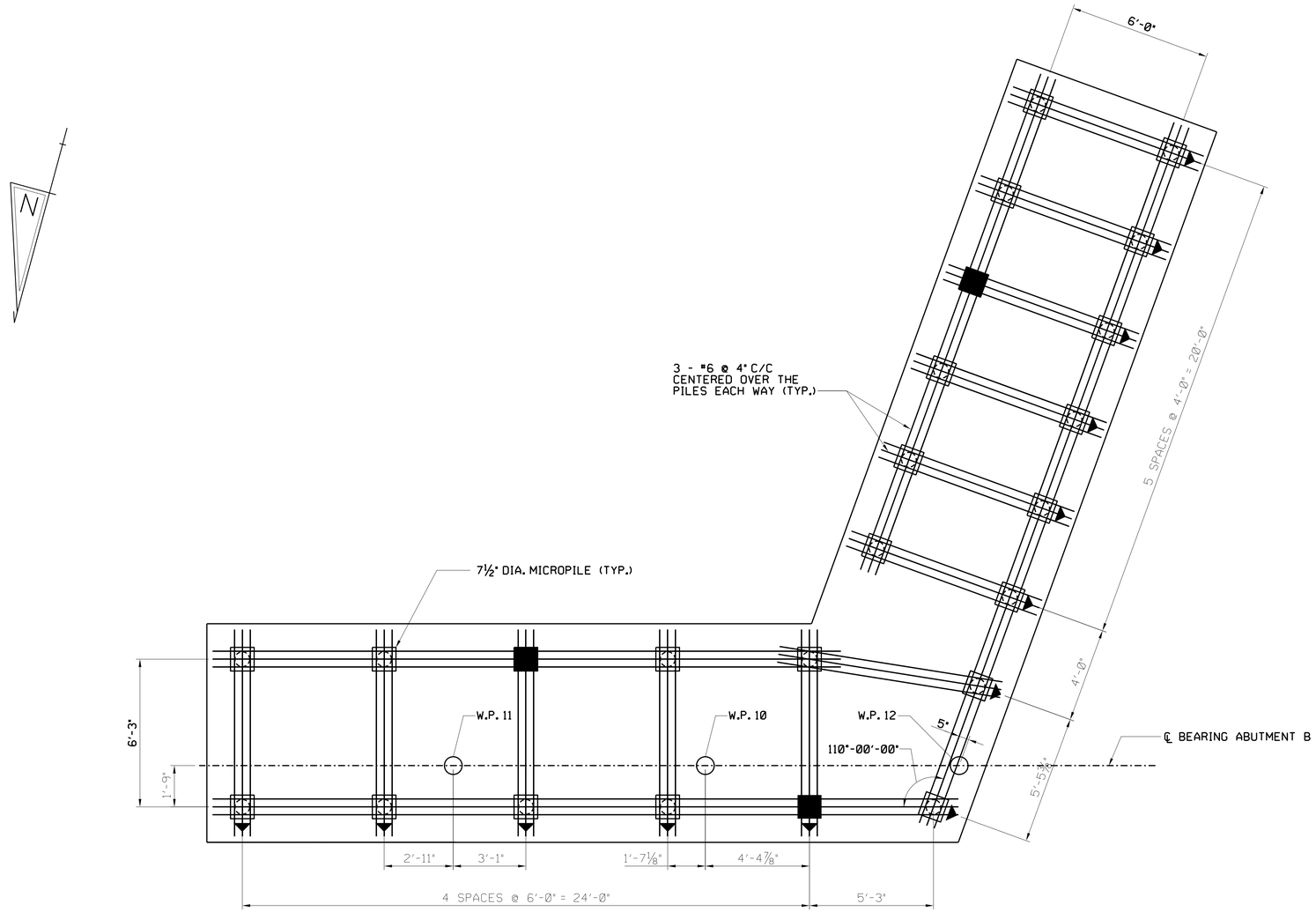

FOOTING REINFORCEMENT PLAN - ABUTMENT B

3 2 1 0 3

SCALE IN FEET

LEGEND

- DENOTES PLUMB PILE
- DENOTES BATTERED PILE AND DIRECTION OF BATTER (4:1 BATTER)
- DENOTES PILE FOR VERIFICATION TEST
- DENOTES PILE FOR PROOF TEST

PILE NOTES:

1. THE ESTIMATED PILE TIP ELEVATION = 140.5'
2. THE FACTORED AXIAL CAPACITY OF THE 7.5" DIAMETER GRAVITY GROUT MICROPILE IS 200 KIPS.
3. VERIFICATION TESTS AND PROOF TESTS FOR MICROPILES ARE INCIDENTAL TO THE MICROPILE ITEM.

REVISIONS:

DATE:	DESCRIPTION:	BY:

NVF AUBURN HEIGHTS STATE PARK
FARM LANE BRIDGE REPLACEMENT

ABUTMENT B FOOTING REINFORCEMENT PLAN

SI

WALTER J. HOEY, III
LICENSE
No. 11204
DELAWARE
PROFESSIONAL ENGINEER
8/19/2021

CIVIL ENGINEER:

CENTURY ENGINEERING
CONSULTING ENGINEERS, SURVEYORS
550 BAY ROAD
DOVER, DELAWARE 19901

CONTRACT NO.: 175013.09

DESIGNED BY: BMC

DRAWN BY: BMC

CHECKED BY: TSW

DATE: OCTOBER 2020

SCALE: AS NOTED

SHEET NO.: S609

CONTRACT NO.:

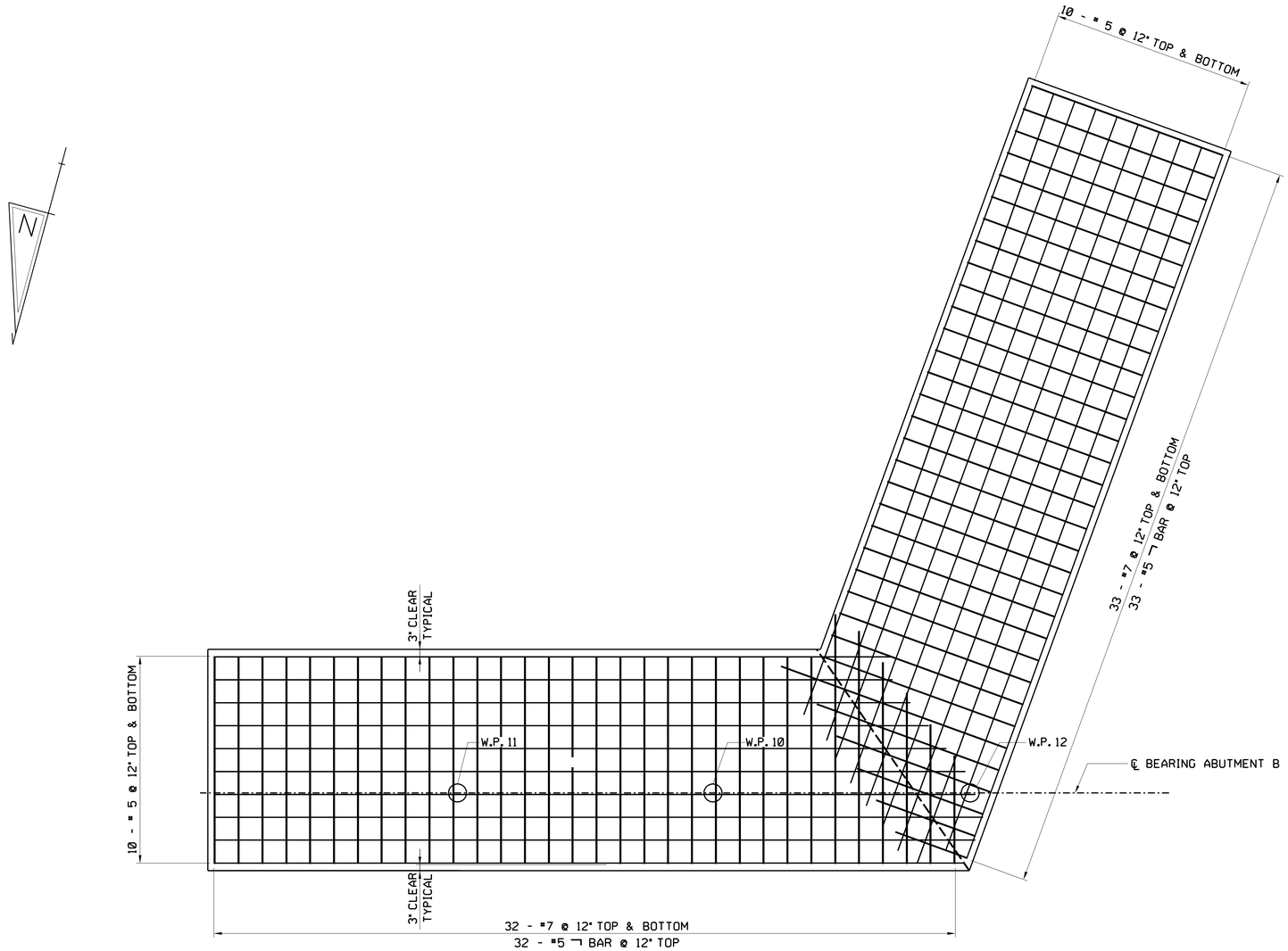

FOOTING REINFORCEMENT PLAN - ABUTMENT B

3 2 1 0 3

SCALE IN FEET

REVISIONS:

DATE:	DESCRIPTION:	BY:

NVF AUBURN HEIGHTS STATE PARK
FARM LANE BRIDGE REPLACEMENT

ABUTMENT B FOOTING REINFORCEMENT PLAN

SI

WALTER J. HOEY, III
LICENSE
No. 11204
DELAWARE
PROFESSIONAL ENGINEER
8/19/2021

CIVIL ENGINEER:

CENTURY ENGINEERING
CONSULTING ENGINEERS, SURVEYORS
550 BAY ROAD
DOVER, DELAWARE 19901

CONTRACT NO.: 175013.09

DESIGNED BY: BMC

DRAWN BY: BMC

CHECKED BY: TSW

DATE: OCTOBER 2020

SCALE: AS NOTED

SHEET NO.: S610

CONTRACT NO.:

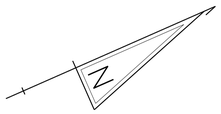

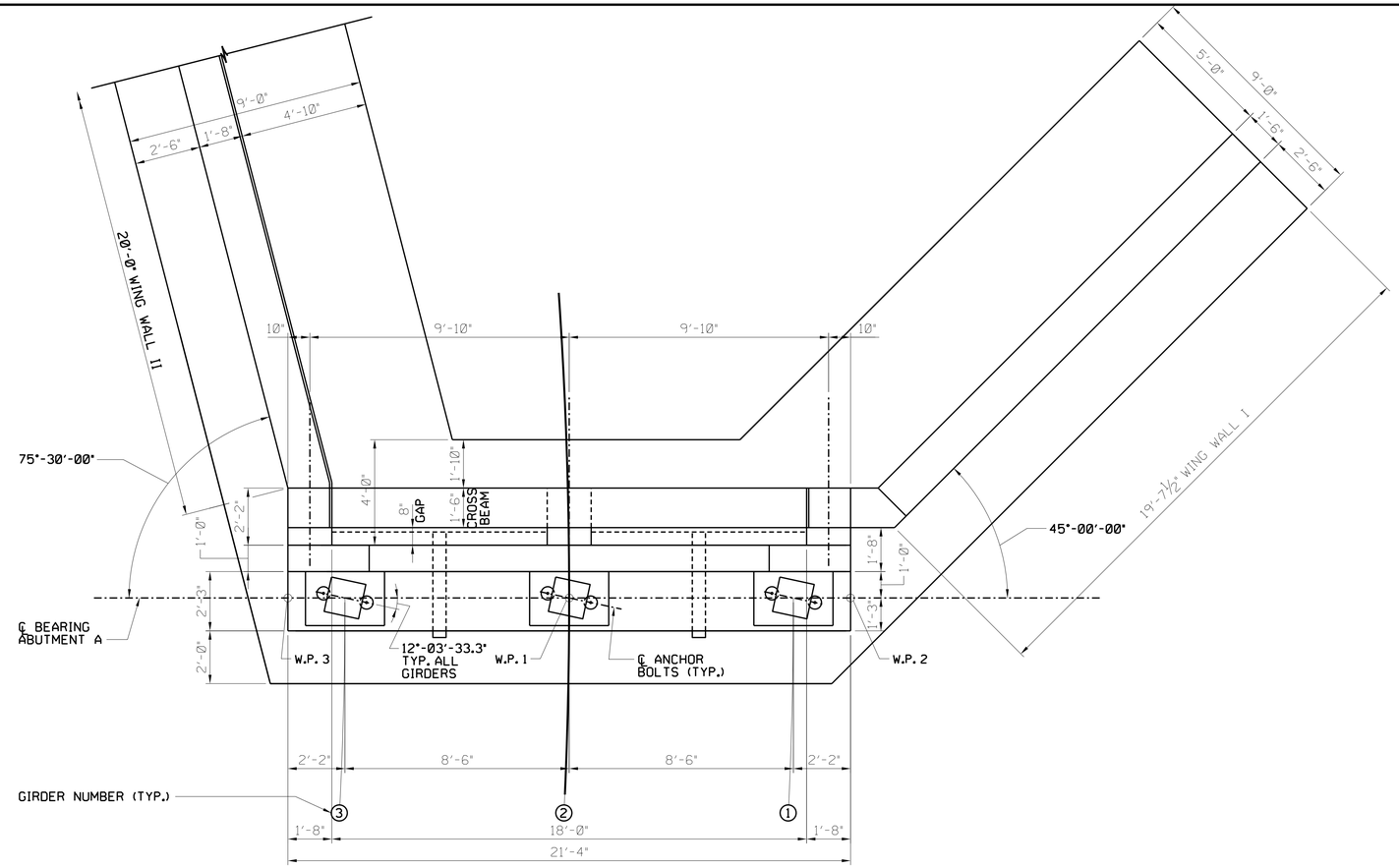

ABUTMENT A PLAN

3 2 1 0 3
SCALE IN FEET

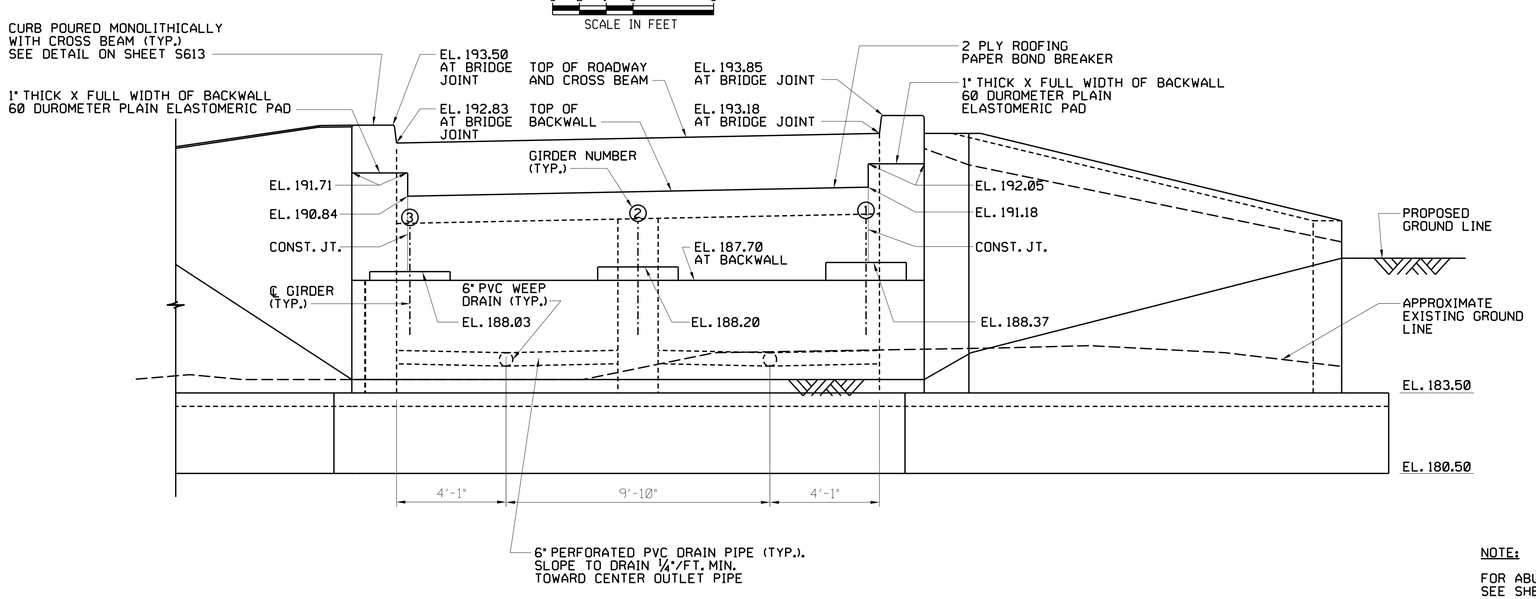

DATUM EL. 175.00

ABUTMENT A ELEVATION

3 2 1 0 3
SCALE IN FEET

NOTE:

FOR ABUTMENT SECTION, SEE SHEET S612

FOR WING WALL ELEVATIONS, SEE SHEETS S614 AND S615.

REVISIONS:

DATE:	DESCRIPTION:	BY:

NVF AUBURN HEIGHTS STATE PARK
FARM LANE BRIDGE REPLACEMENT

ABUTMENT A PLAN AND ELEVATION

SI

WALTER J. HOEY, III
LICENSE
No. 11204
DELAWARE
PROFESSIONAL ENGINEER
8/19/2021

CIVIL ENGINEER:

CENTURY ENGINEERING
CONSULTING ENGINEERS, SURVEYORS
550 BAY ROAD
DOVER, DELAWARE 19901

CONTRACT NO.: 175013.09

DESIGNED BY: BMC

DRAWN BY: BMC

CHECKED BY: TSW

DATE: OCTOBER 2020

SCALE: AS NOTED

SHEET NO.: S611

CONTRACT NO.:

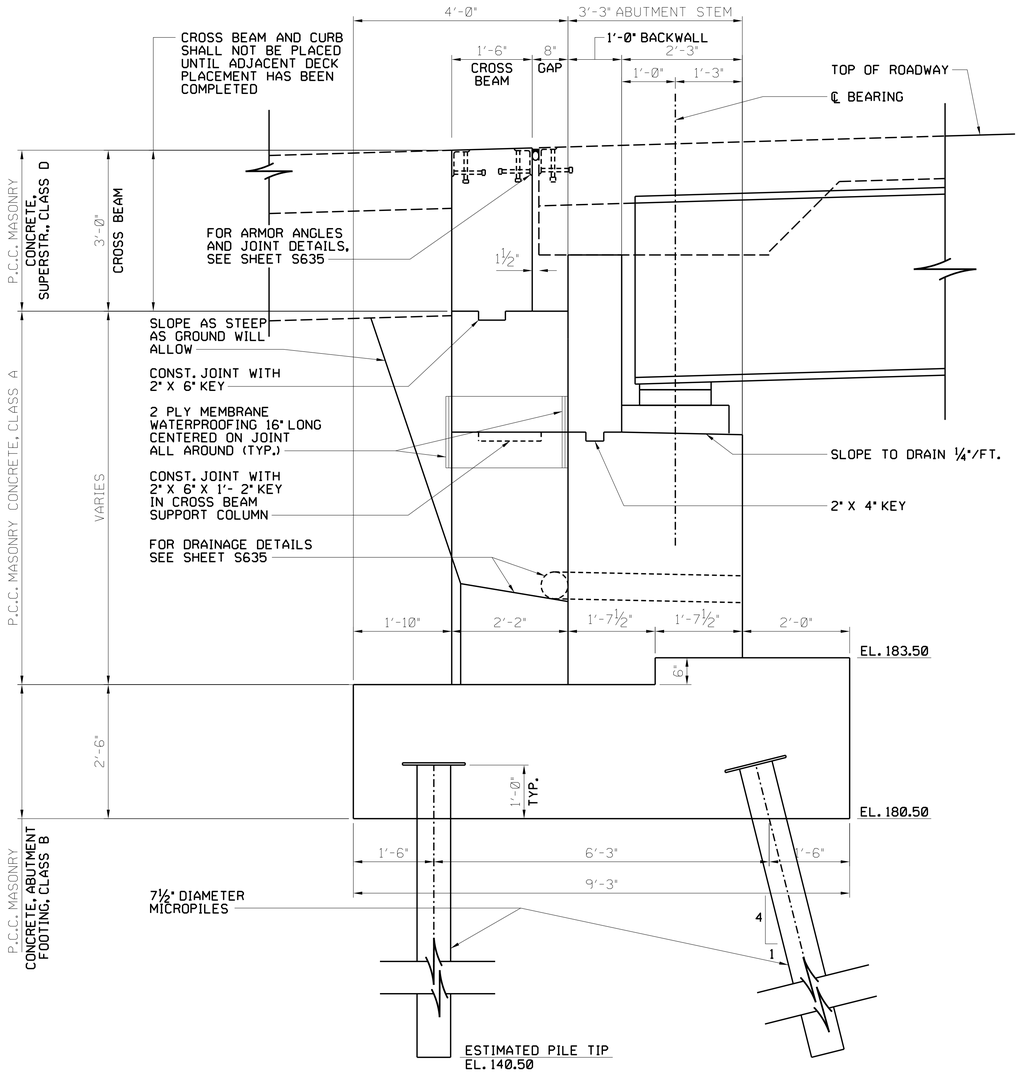

ABUTMENT A TYPICAL SECTION

1 0 1
SCALE IN FEET

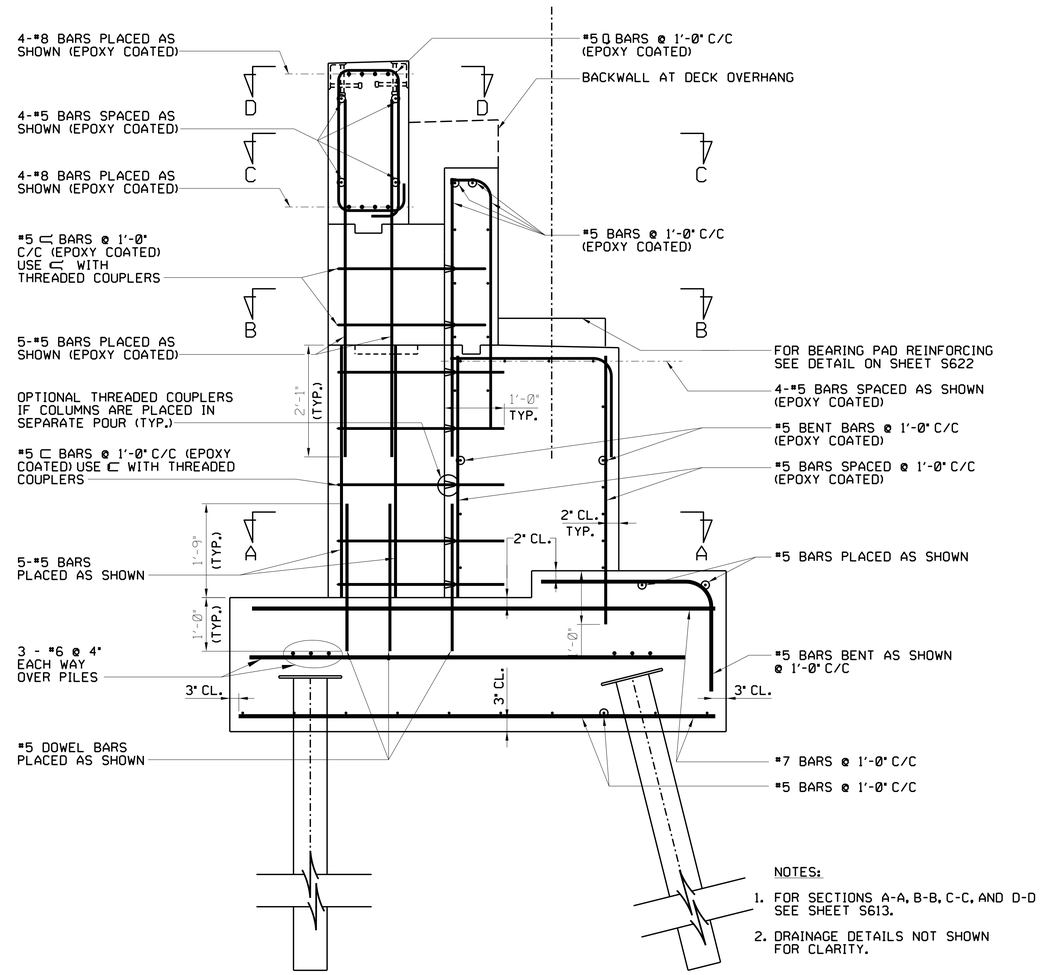

NOTES:

1. FOR SECTIONS A-A, B-B, C-C, AND D-D SEE SHEET S613.
2. DRAINAGE DETAILS NOT SHOWN FOR CLARITY.

ABUTMENT A TYPICAL SECTION REINFORCEMENT

1 0 1
SCALE IN FEET

REVISIONS:

DATE:	DESCRIPTION:	BY:

NVF AUBURN HEIGHTS STATE PARK
FARM LANE BRIDGE REPLACEMENT

ABUTMENT A TYPICAL SECTION

SI

WALTER J. HOEY, III
LICENSE
No. 11204
DELAWARE
PROFESSIONAL ENGINEER
8/19/2021

CIVIL ENGINEER:

CENTURY ENGINEERING
CONSULTING ENGINEERS, SURVEYORS
550 BAY ROAD
DOVER, DELAWARE 19901

CONTRACT NO.: 175013.09

DESIGNED BY: BMC
DRAWN BY: BMC
CHECKED BY: TSW
DATE: OCTOBER 2020
SCALE: AS NOTED
SHEET NO.: S612
CONTRACT NO.:

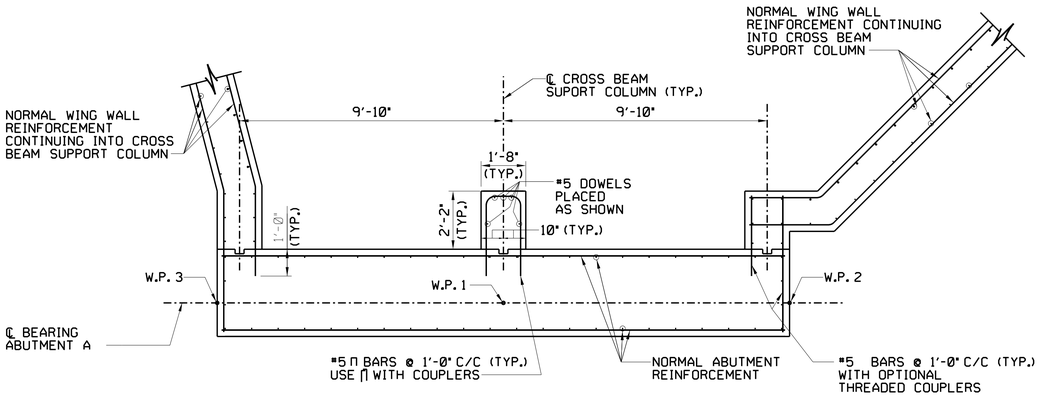

SECTION A-A - BELOW BEAM SEAT

3 2 1 0 3
SCALE IN FEET

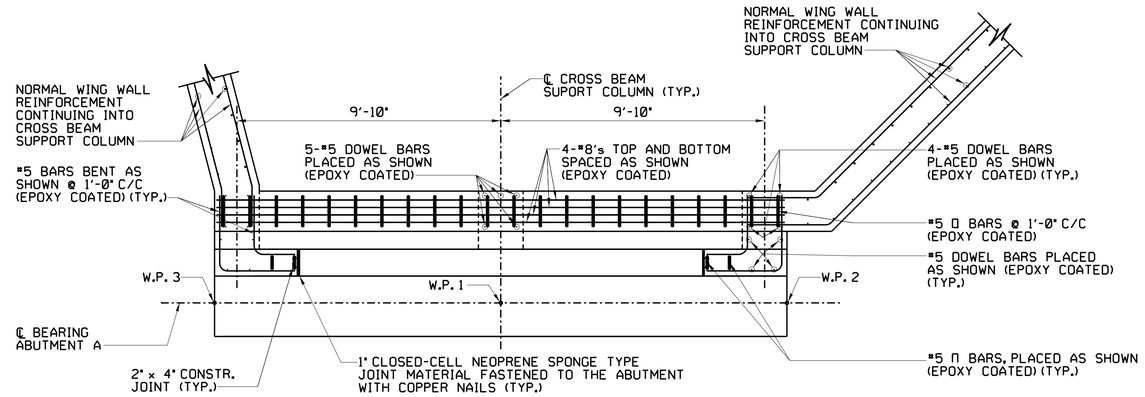

SECTION C-C - ABOVE BEAM SEAT THROUGH CROSS BEAM

3 2 1 0 3
SCALE IN FEET

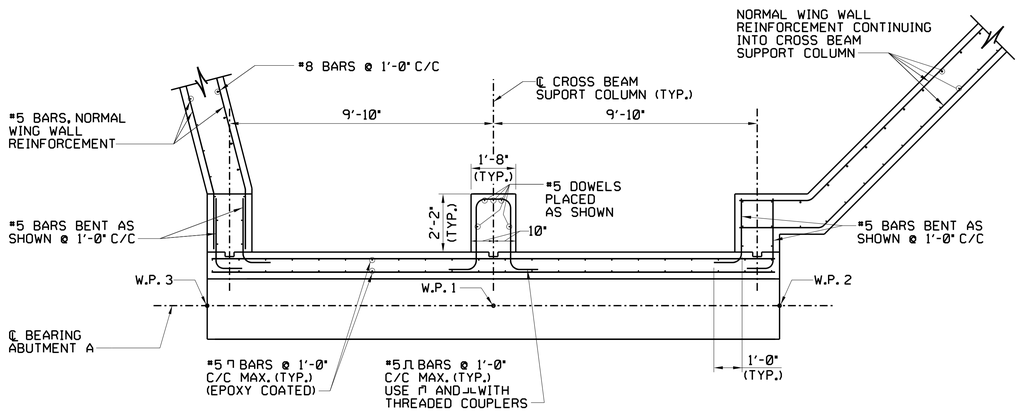

SECTION B-B - ABOVE BEAM SEAT

3 2 1 0 3
SCALE IN FEET

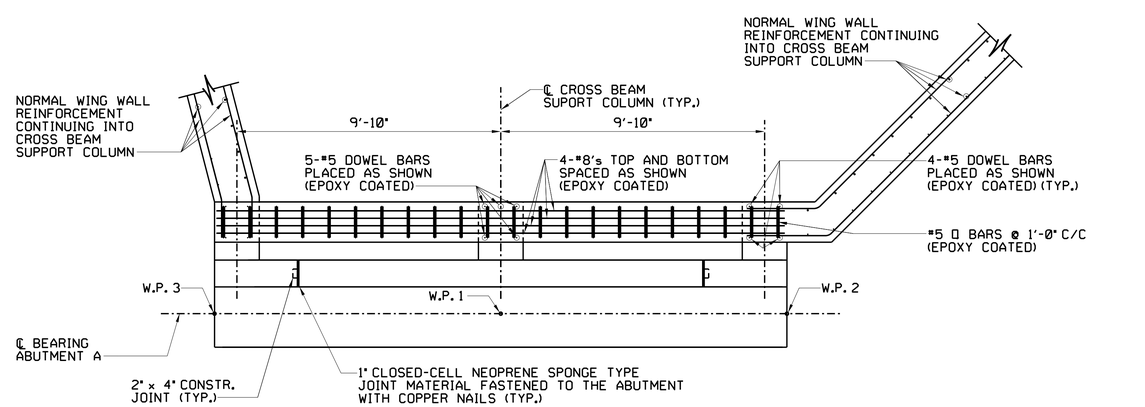

SECTION D-D - THROUGH CROSS BEAM

3 2 1 0 3
SCALE IN FEET

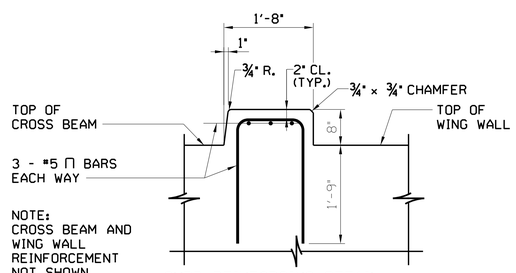

NOTE:
CROSS BEAM AND WING WALL REINFORCEMENT NOT SHOWN FOR CLARITY.

CURB REINFORCING DETAIL

1 0 1
SCALE IN FEET

NOTES:

1. FOR SECTION LOCATIONS, SEE SHEET S612.
2. FOR ABUTMENT A DIMENSIONS, SEE SHEET S611 & S612.
3. FOR WING WALL DIMENSIONS, SEE SHEETS S614 AND S615.

REVISIONS:

DATE:	DESCRIPTION:	BY:

NVF AUBURN HEIGHTS STATE PARK
FARM LANE BRIDGE REPLACEMENT

ABUTMENT A CORNER SECTIONS AND DETAILS

SI

WALTER J. HOEY, III
LICENSE
No. 11204
DELAWARE
PROFESSIONAL ENGINEER
8/19/2021

CIVIL ENGINEER:

CENTURY ENGINEERING
CONSULTING ENGINEERS, SURVEYORS
550 BAY ROAD
DOVER, DELAWARE 19901

CONTRACT NO.: 175013.09

DESIGNED BY: BMC
DRAWN BY: MAZ
CHECKED BY: TSW
DATE: OCTOBER 2020
SCALE: AS NOTED
SHEET NO.: S613
CONTRACT NO.:

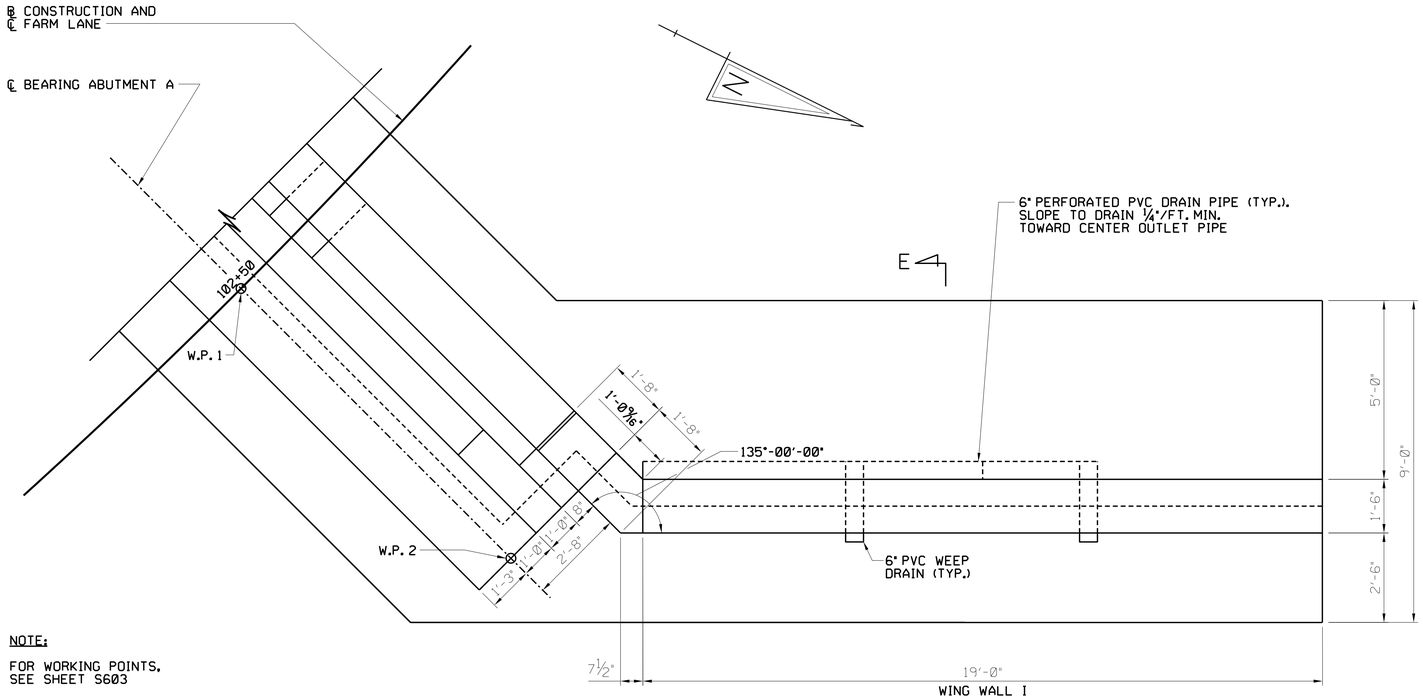

NOTE:

FOR WORKING POINTS,
SEE SHEET S603

WING WALL I PLAN

2 1 0 2
SCALE IN FEET

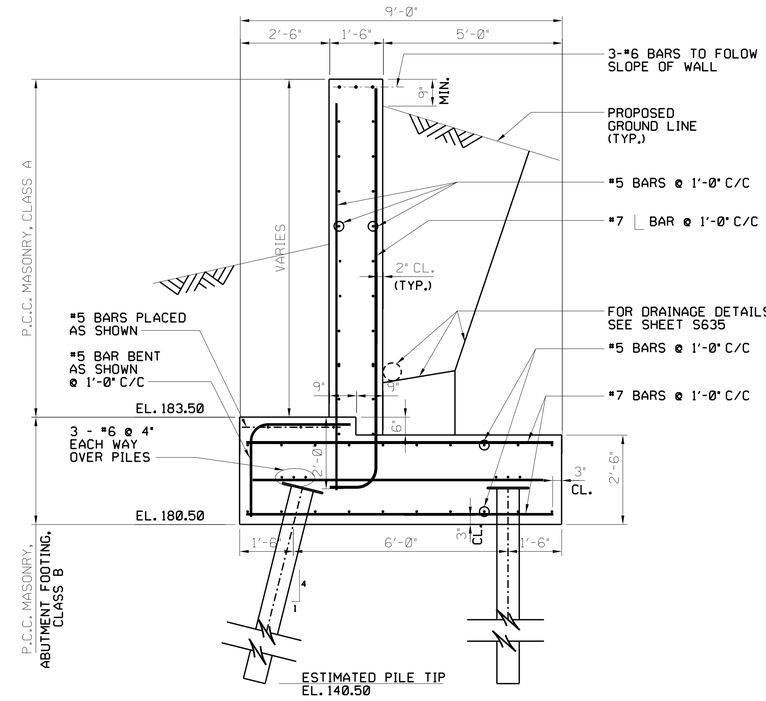

SECTION E-E

2 1 0 2
SCALE IN FEET

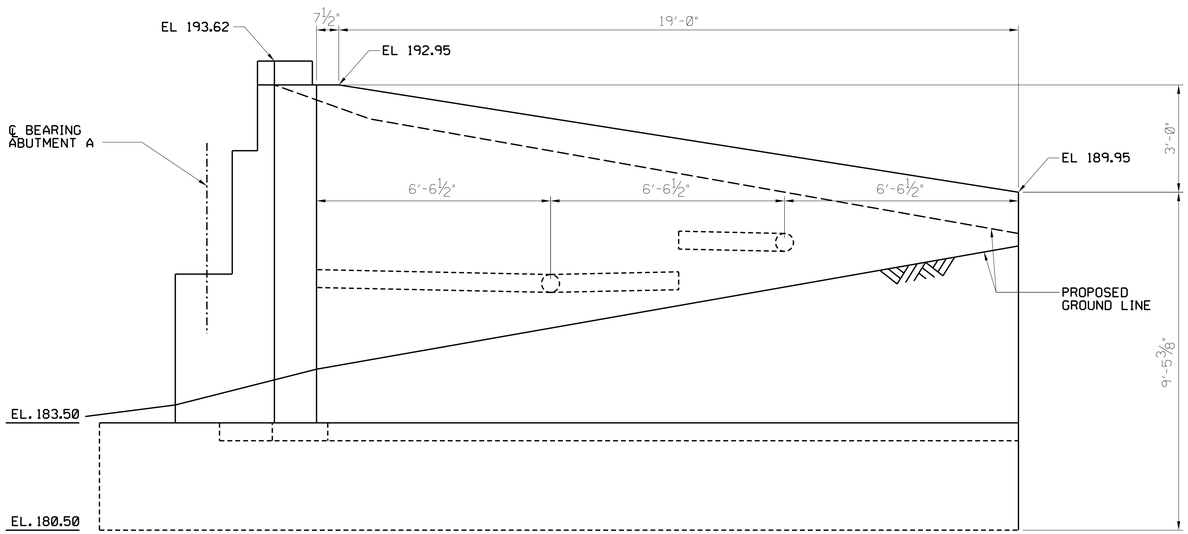

WING WALL I ELEVATION

2 1 0 2
SCALE IN FEET

REVISIONS:

DATE:	DESCRIPTION:	BY:

NVF AUBURN HEIGHTS STATE PARK
FARM LANE BRIDGE REPLACEMENT

WING WALL I PLAN, ELEVATION, AND SECTION

SI

WALTER J. HOEY, III
LICENSE
No. 11204
DELAWARE
PROFESSIONAL ENGINEER
8/19/2021

CIVIL ENGINEER:

CENTURY ENGINEERING
CONSULTING ENGINEERS, SURVEYORS
550 BAY ROAD
DOVER, DELAWARE 19901

CONTRACT NO.: 175013.09

DESIGNED BY: BMC

DRAWN BY: BMC

CHECKED BY: TSW

DATE: OCTOBER 2020

SCALE: AS NOTED

SHEET NO.: S614

CONTRACT NO.:

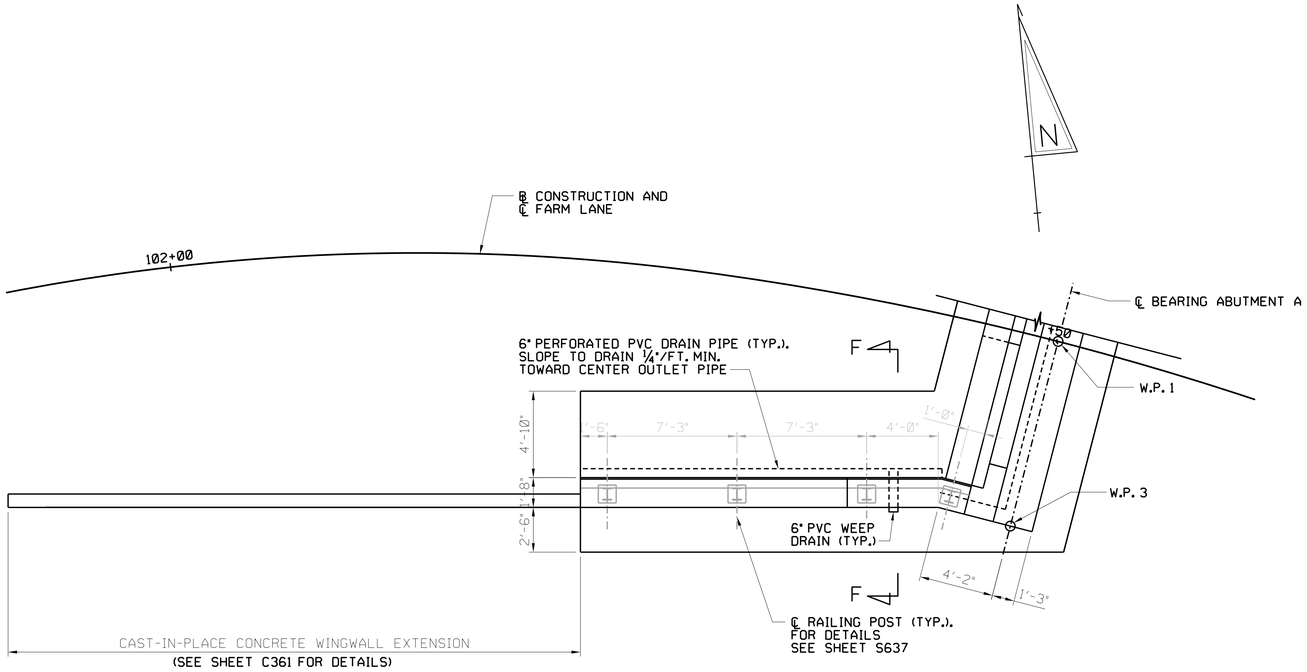

WING WALL II PLAN

4 2 0 4

SCALE IN FEET

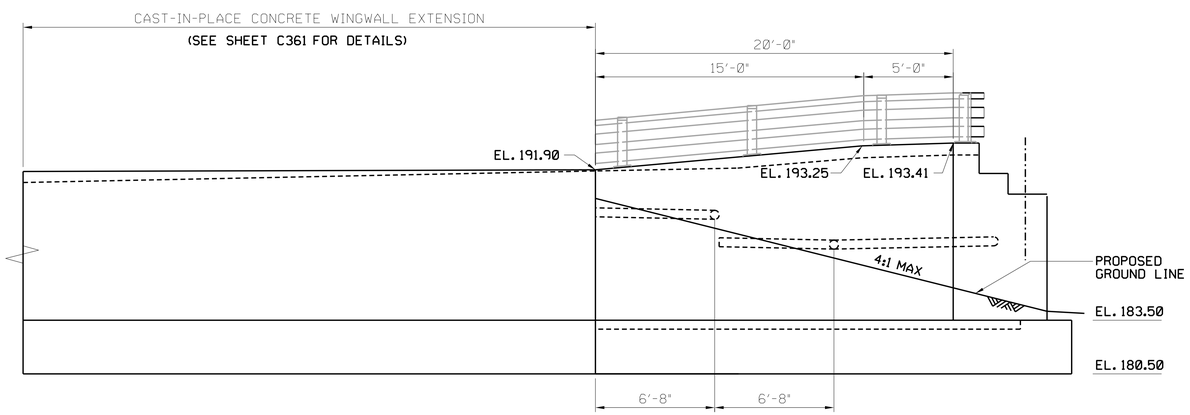

WING WALL II ELEVATION

4 2 0 4

SCALE IN FEET

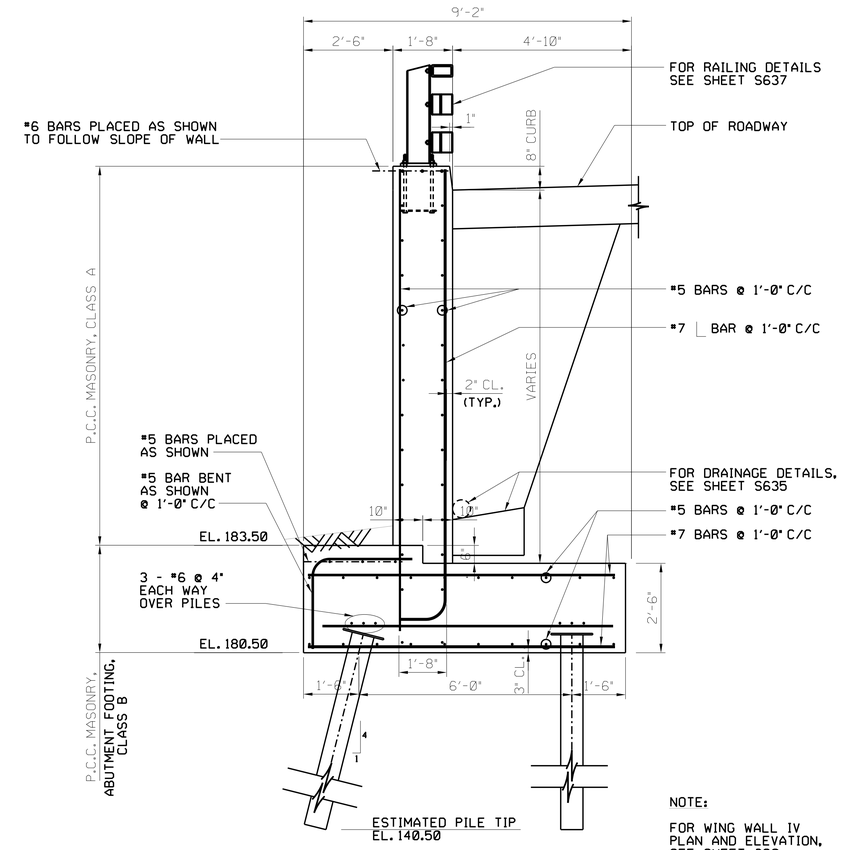

NOTE:

FOR WING WALL IV
PLAN AND ELEVATION,
SEE SHEET 620

SECTION F-F - WING WALL II AND IV

2 1 0 2

SCALE IN FEET

REVISIONS:

DATE:	DESCRIPTION:	BY:

NVF AUBURN HEIGHTS STATE PARK
FARM LANE BRIDGE REPLACEMENT

WING WALL II PLAN, ELEVATION, AND SECTION

SI

WALTER J. HOEY, III
LICENSE
No. 11204
DELAWARE
PROFESSIONAL ENGINEER
8/13/2021

CIVIL ENGINEER:

CENTURY ENGINEERING
CONSULTING ENGINEERS, SURVEYORS
550 BAY ROAD
DOVER, DELAWARE 19901

CONTRACT NO.: 175013.09

DESIGNED BY:

DRAWN BY:

CHECKED BY: TSW

DATE: OCTOBER 2020

SCALE: AS NOTED

SHEET NO.: S615

CONTRACT NO.:

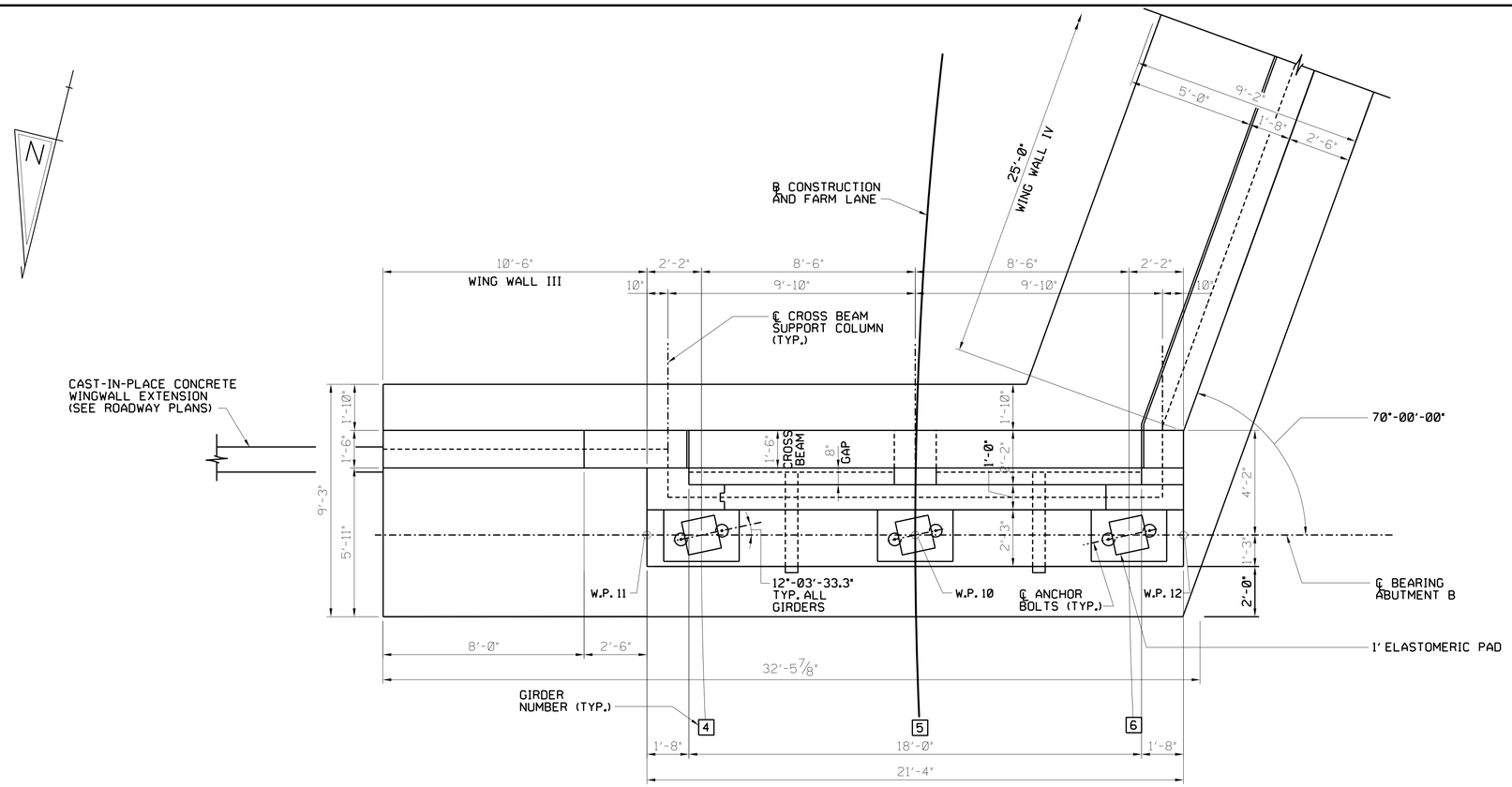

ABUTMENT B PLAN

3 2 1 0 3

SCALE IN FEET

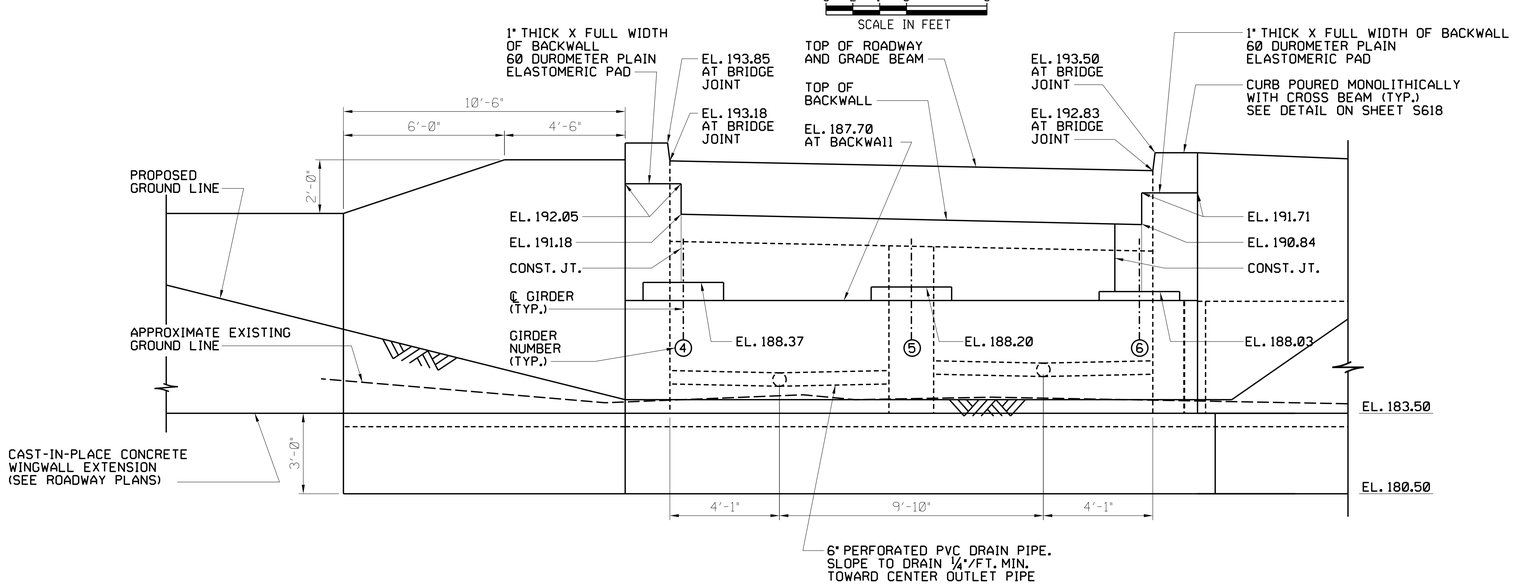

DATUM EL. 175.00

ABUTMENT B ELEVATION

3 2 1 0 3

SCALE IN FEET

NOTE:

FOR ABUTMENT SECTION, SEE SHEET S617.

FOR WING WALL ELEVATIONS, SEE SHEET S619 AND S620.

REVISIONS:

DATE:	DESCRIPTION:	BY:

NVF AUBURN HEIGHTS STATE PARK
FARM LANE BRIDGE REPLACEMENT

ABUTMENT B PLAN AND ELEVATION

SI

WALTER J. HOEY, III
LICENSE
No. 11204
DELAWARE
PROFESSIONAL ENGINEER
8/19/2021

CIVIL ENGINEER:

CENTURY ENGINEERING
CONSULTING ENGINEERS, SURVEYORS
550 BAY ROAD
DOVER, DELAWARE 19901

CONTRACT NO.: 175013.09

DESIGNED BY: BMC

DRAWN BY: BMC

CHECKED BY: TSW

DATE: OCTOBER 2020

SCALE: AS NOTED

SHEET NO.: S616

CONTRACT NO.:

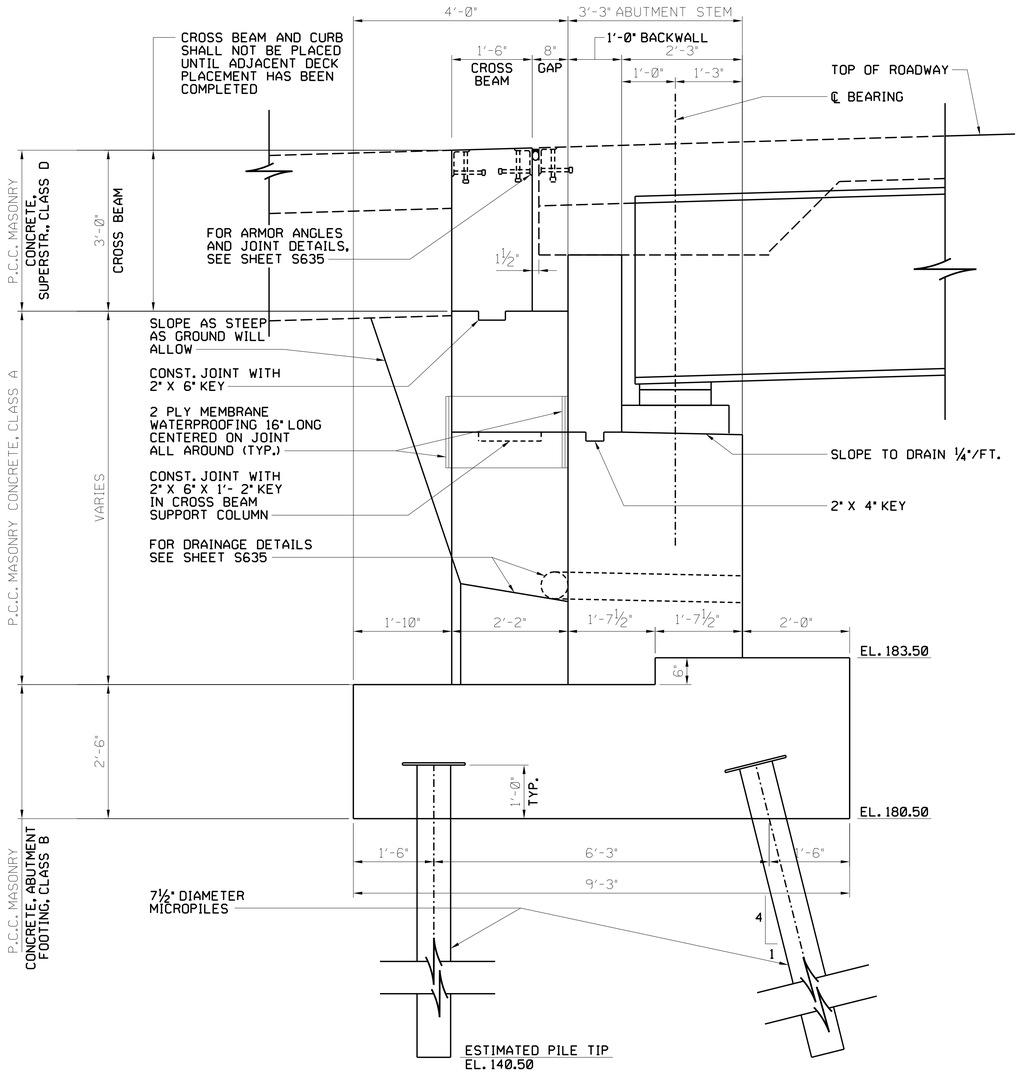

ABUTMENT B TYPICAL SECTION

1 0 1
SCALE IN FEET

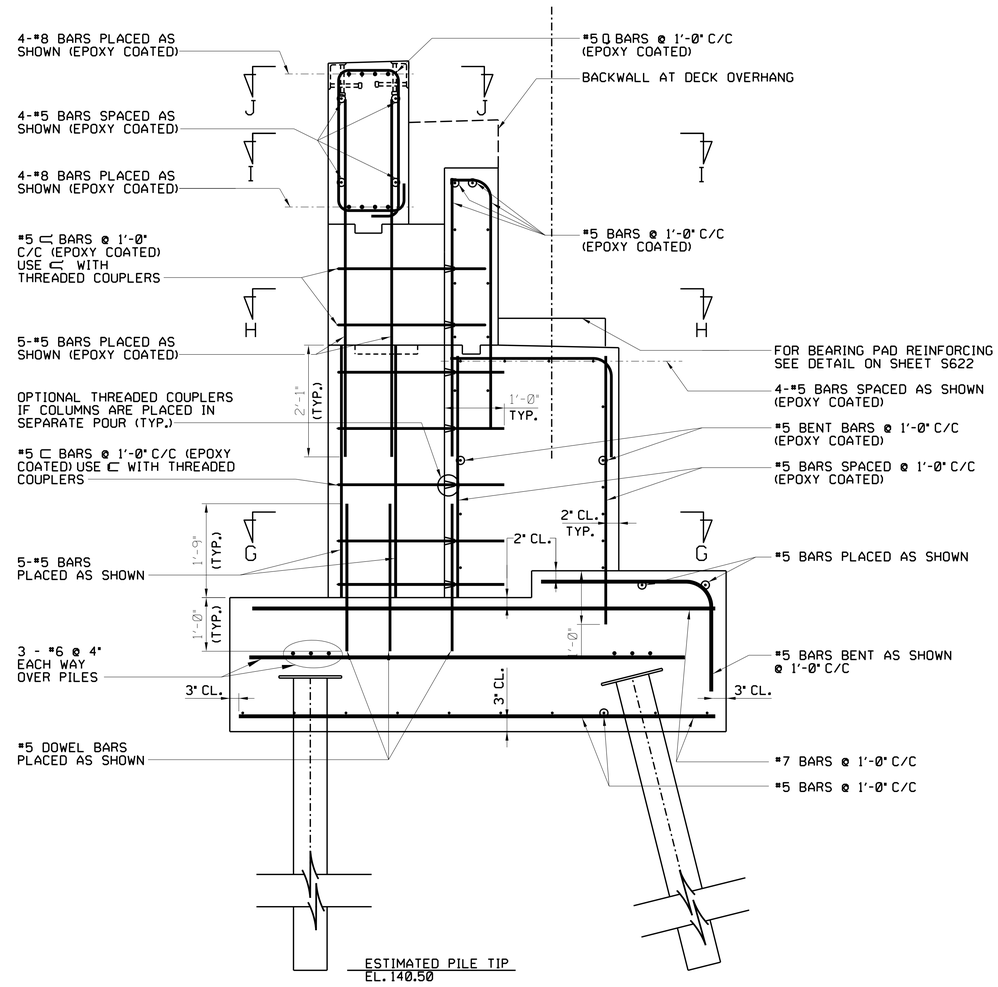

ABUTMENT B TYPICAL SECTION REINFORCEMENT

1 0
SCALE IN FEET

NOTE:

FOR SECTIONS G-G, H-H, I-I, AND J-J SEE SHEET S618.

REVISIONS:

DATE:	DESCRIPTION:	BY:

NVF AUBURN HEIGHTS STATE PARK
FARM LANE BRIDGE REPLACEMENT

ABUTMENT B TYPICAL SECTION

SI

WALTER J. HOEY, III
LICENSE
No. 11204
DELAWARE
PROFESSIONAL ENGINEER
8/19/2021

CIVIL ENGINEER:

CENTURY ENGINEERING
CONSULTING ENGINEERS, SURVEYORS
550 BAY ROAD
DOVER, DELAWARE 19901

CONTRACT NO.: 175013.09

DESIGNED BY: BMC

DRAWN BY: BMC

CHECKED BY: TSW

DATE: OCTOBER 2020

SCALE: AS NOTED

SHEET NO.: S617

CONTRACT NO.:

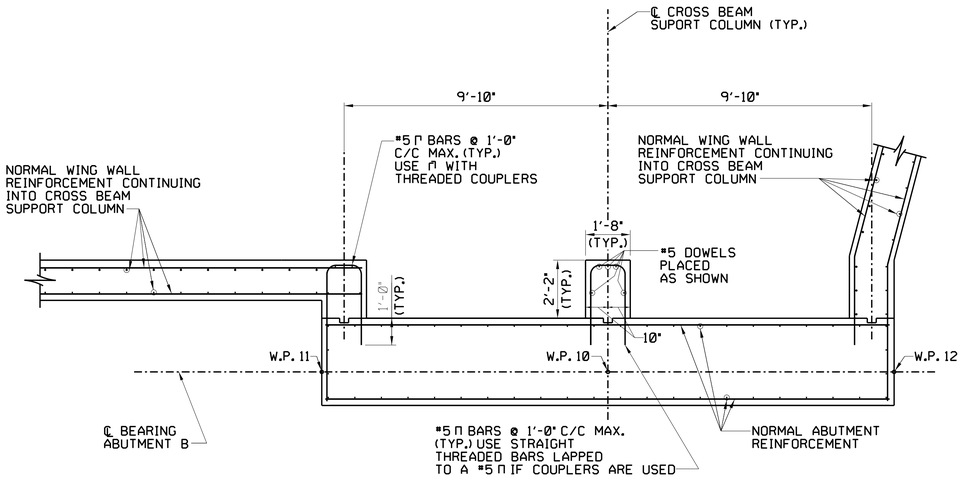

SECTION G-G - BELOW BEAM SEAT

3 2 1 0 3
SCALE IN FEET

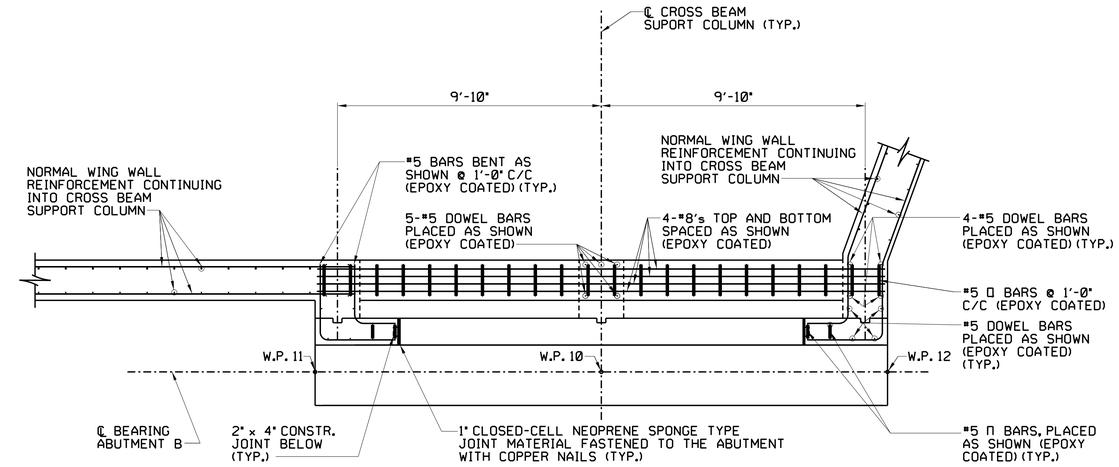

SECTION I-I - ABOVE BEAM SEAT THROUGH CROSS BEAM

3 2 1 0 3
SCALE IN FEET

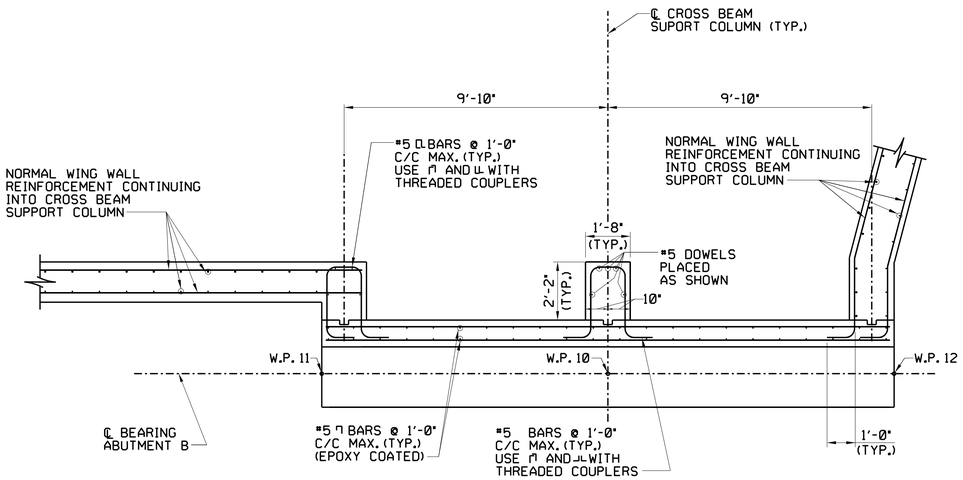

SECTION H-H - ABOVE BEAM SEAT

3 2 1 0 3
SCALE IN FEET

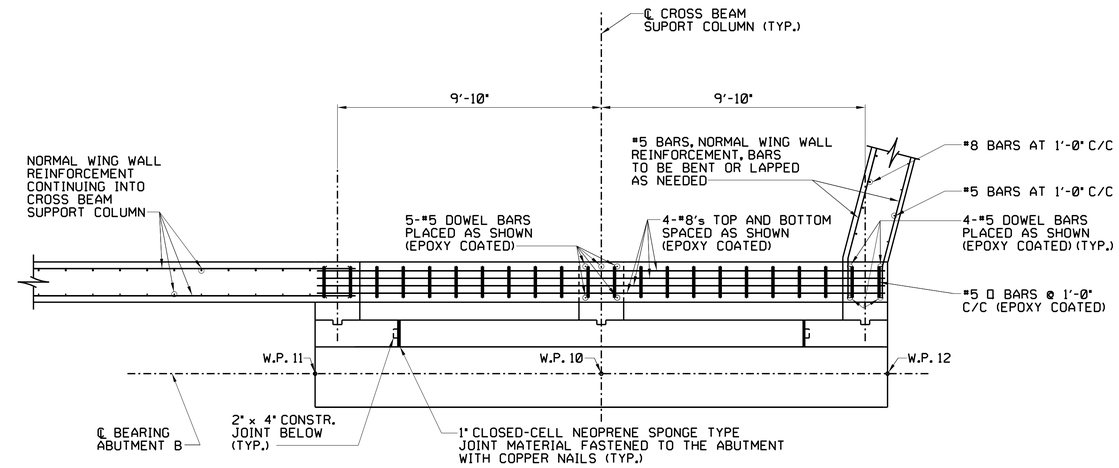

SECTION J-J - THROUGH CROSS BEAM

3 2 1 0 3
SCALE IN FEET

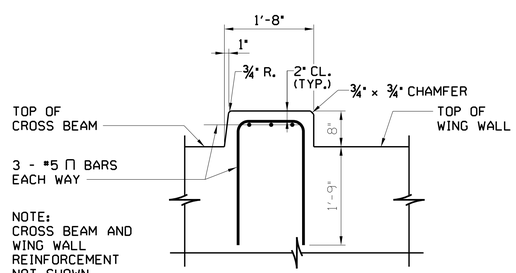

NOTE:
CROSS BEAM AND
WING WALL
REINFORCEMENT
NOT SHOWN
FOR CLARITY.

CURB REINFORCING DETAIL

1 0 1
SCALE IN FEET

NOTES:

1. FOR ABUTMENT B SECTION, SEE SHEET S617.
2. FOR ABUTMENT B DIMENSIONS, SEE SHEET S616.
3. FOR WING WALL DIMENSIONS SEE SHEETS S619 AND S620.

REVISIONS:

DATE:	DESCRIPTION:	BY:

NVF AUBURN HEIGHTS STATE PARK
FARM LANE BRIDGE REPLACEMENT

ABUTMENT B CORNER SECTIONS AND DETAILS

SI

WALTER J. HOEL, III
LICENSE
No. 11204
DELAWARE
PROFESSIONAL ENGINEER
8/19/2021

CIVIL ENGINEER:

CENTURY ENGINEERING
CONSULTING ENGINEERS, SURVEYORS
550 BAY ROAD
DOVER, DELAWARE 19901

CONTRACT NO.: 175013.09

DESIGNED BY: BMC
DRAWN BY: MAZ
CHECKED BY: TSW
DATE: OCTOBER 2020
SCALE: AS NOTED
SHEET NO.: S618
CONTRACT NO.:

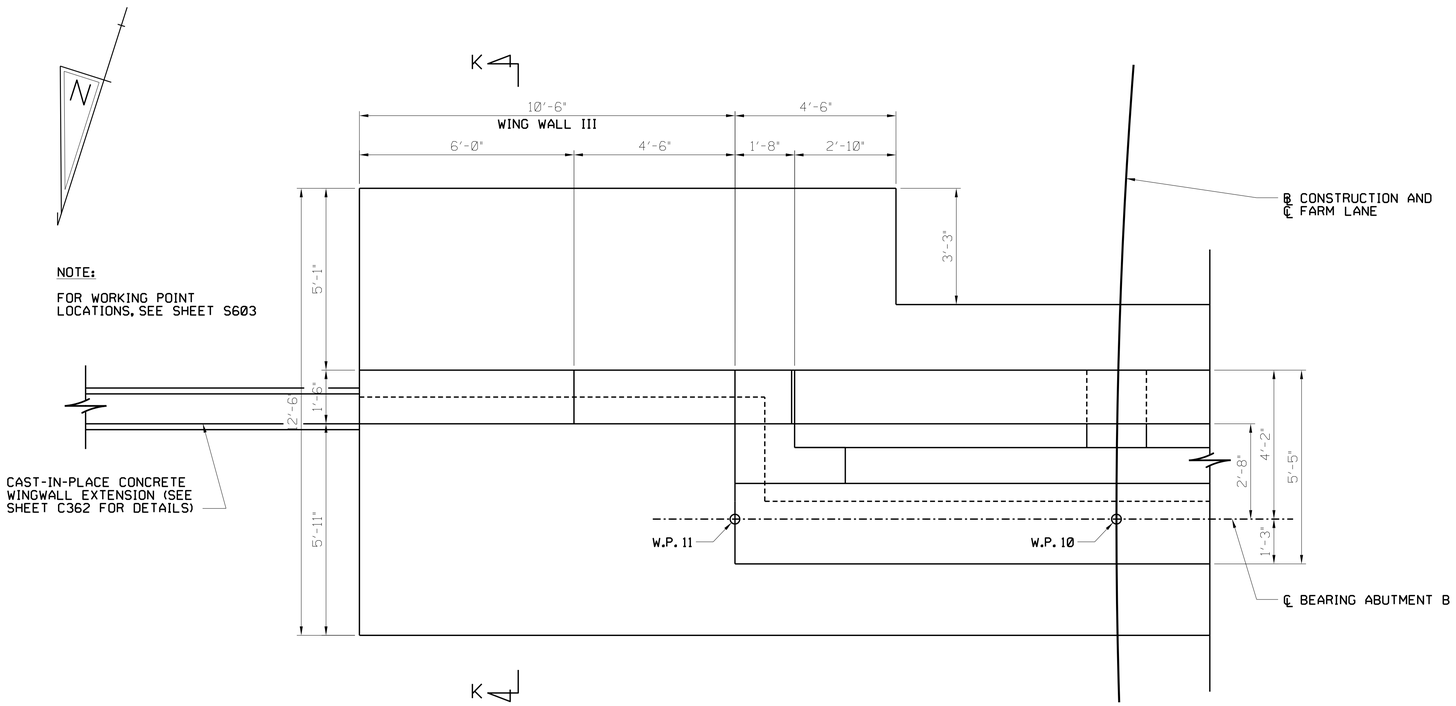

WING WALL III PLAN

2 1 0 2

SCALE IN FEET

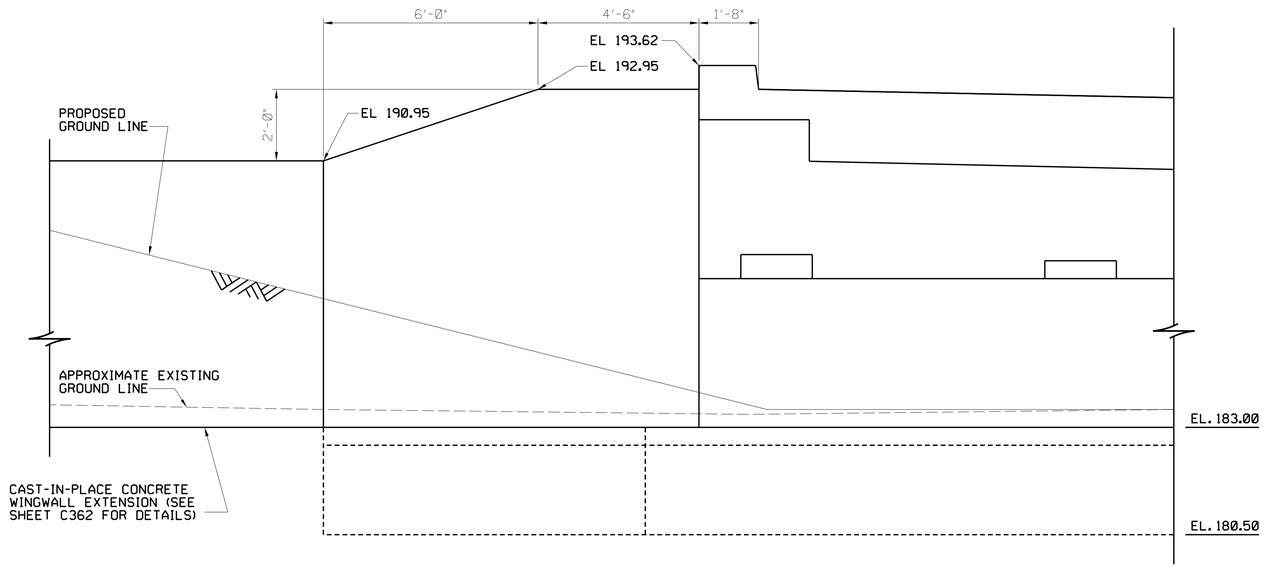

WING WALL III ELEVATION

2 1 0 2

SCALE IN FEET

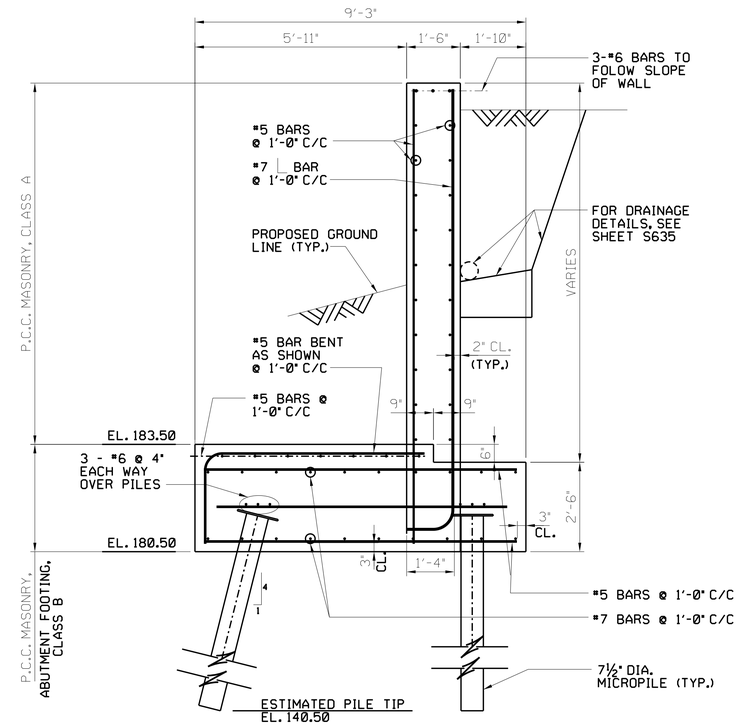

SETION K-K - WING WALL III

2 1 0 2

SCALE IN FEET

REVISIONS:

DATE:	DESCRIPTION:	BY:

NVF AUBURN HEIGHTS STATE PARK
FARM LANE BRIDGE REPLACEMENT

WING WALL III PLAN, ELEVATION, AND SECTION

SI

WALTER J. HOEY, III
LICENSE
No. 11204
DELAWARE
PROFESSIONAL ENGINEER
8/19/2021

CIVIL ENGINEER:

CENTURY ENGINEERING
CONSULTING ENGINEERS, SURVEYORS
550 BAY ROAD
DOVER, DELAWARE 19901

CONTRACT NO.: 175013.09

DESIGNED BY: BMC

DRAWN BY: BMC

CHECKED BY: TSW

DATE: OCTOBER 2020

SCALE: AS NOTED

SHEET NO.: S619

CONTRACT NO.:

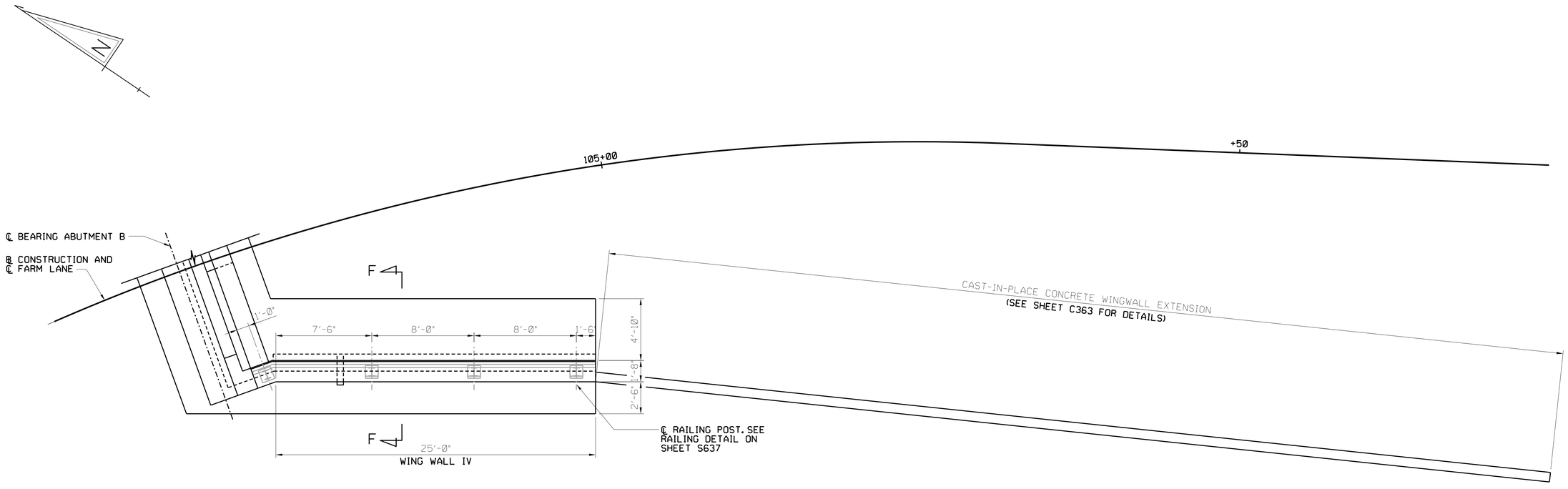

WING WALL IV PLAN

4 2 0 4

SCALE IN FEET

NOTES:

1. FOR WORKING POINTS, SEE SHEET S603
2. FOR WING WALL IV SECTION, SEE SECTION F-F ON SHEET S615

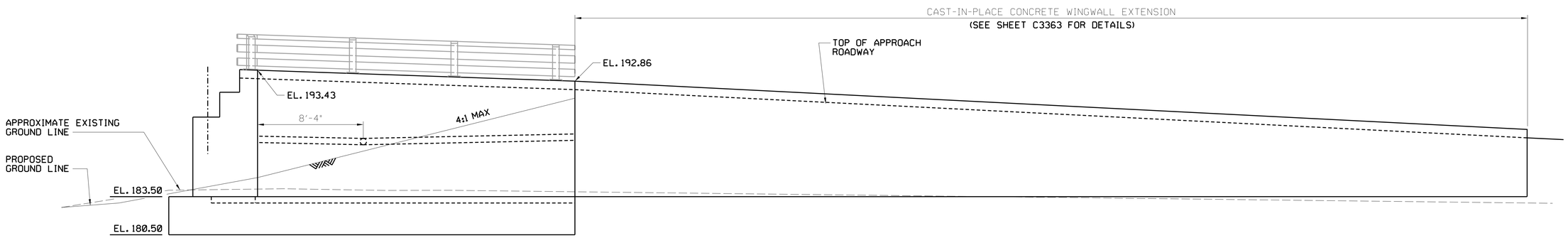

4 0 4

SCALE IN FEET

WING WALL IV ELEVATION

2

REVISIONS:

DATE:	DESCRIPTION:	BY:

NVF AUBURN HEIGHTS STATE PARK
FARM LANE BRIDGE REPLACEMENT

WING WALL IV PLAN AND ELEVATION

SI

WALTER J. HOEY, III
LICENSE
No. 11204
DELAWARE
PROFESSIONAL ENGINEER
8/19/2021

CIVIL ENGINEER:

CENTURY ENGINEERING
CONSULTING ENGINEERS, SURVEYORS
550 BAY ROAD
DOVER, DELAWARE 19901

CONTRACT NO.: 175013.09

DESIGNED BY: BMC

DRAWN BY: BMC

CHECKED BY: TSW

DATE: OCTOBER 2020

SCALE: AS NOTED

SHEET NO.: S620

CONTRACT NO.:

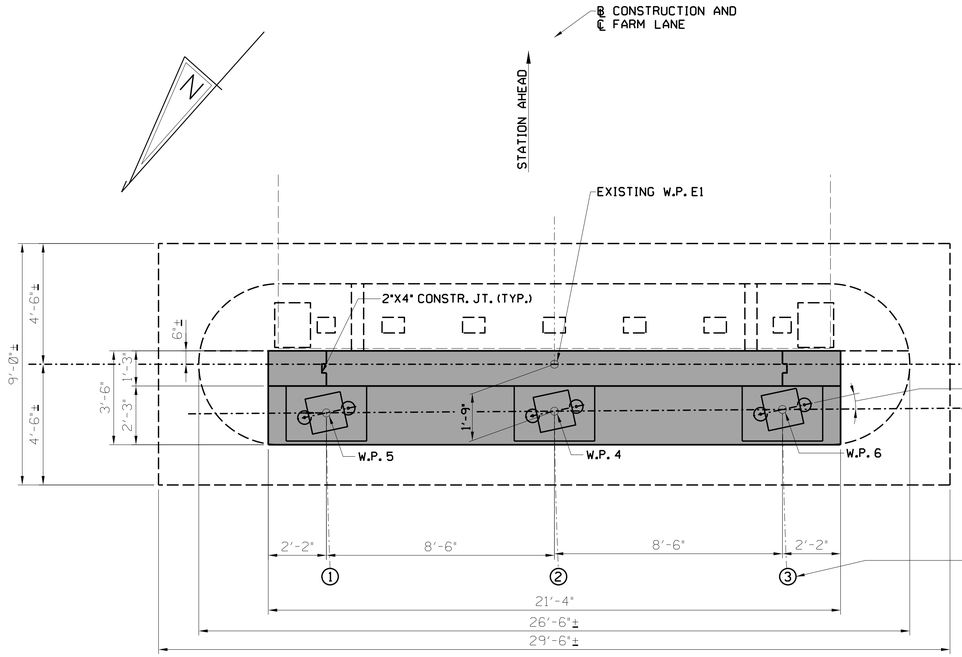

PIER 1 PLAN

3 2 1 0 3

SCALE IN FEET

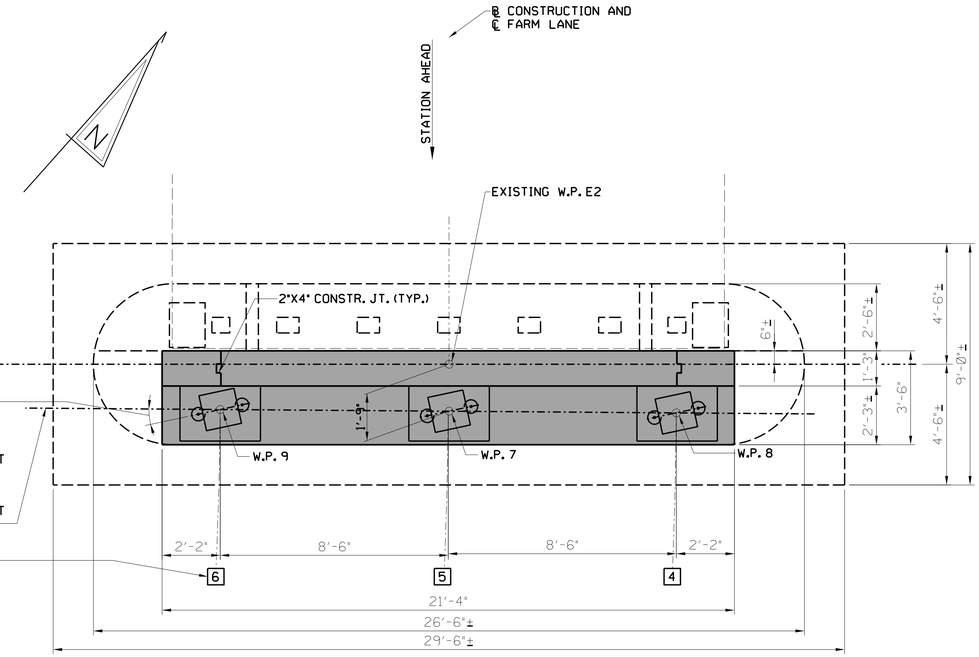

PIER 2 PLAN

3 2 1 0 3

SCALE IN FEET

℄ EXISTING PIER 1

℄ EXISTING PIER 2

12"-03'-33.3"
TYP. APPROACH SPAN GIRDERS

℄ BEARING APPROACH SPAN 1
FOR GEOMETRY SEE STAKE-OUT
PLAN ON SHEET S603

℄ BEARING APPROACH SPAN 2
FOR GEOMETRY SEE STAKE-OUT
PLAN ON SHEET S603

GIRDER NUMBER (TYP.)

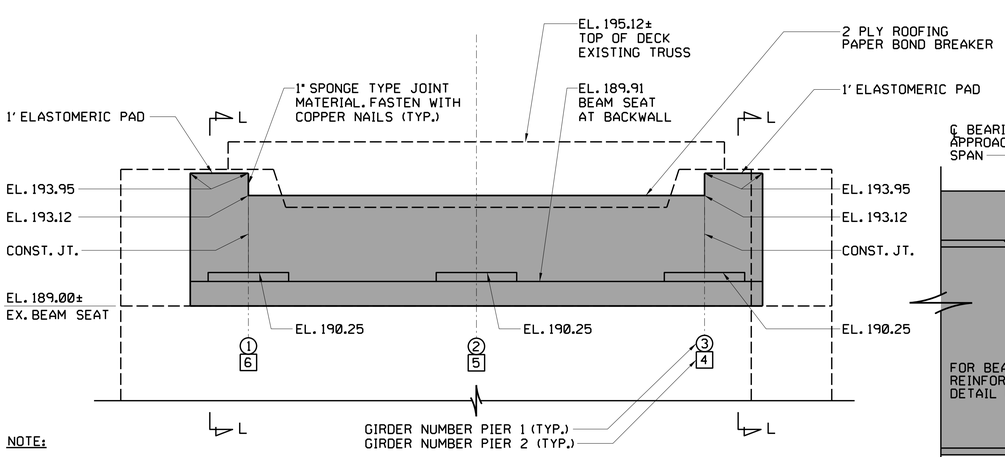

NOTE:

ELEVATIONS FOR BOTH
APPROACH SPANS SHOWN

PIER ELEVATION

3 2 1 0 3

SCALE IN FEET

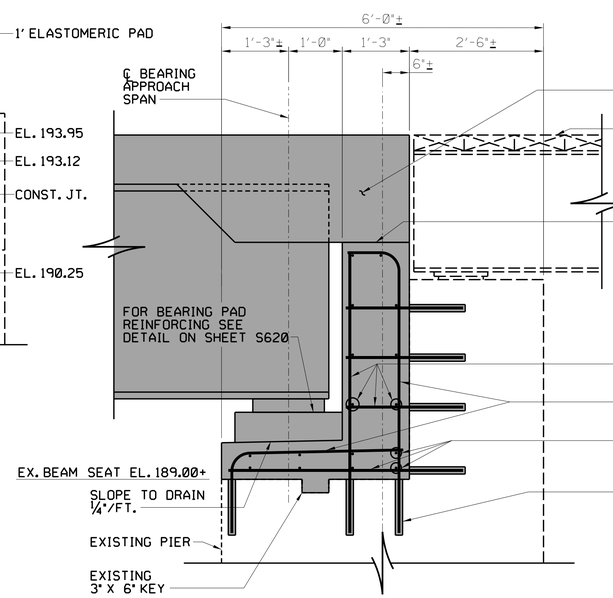

PIER TYPICAL SECTION

1 0 1

SCALE IN FEET

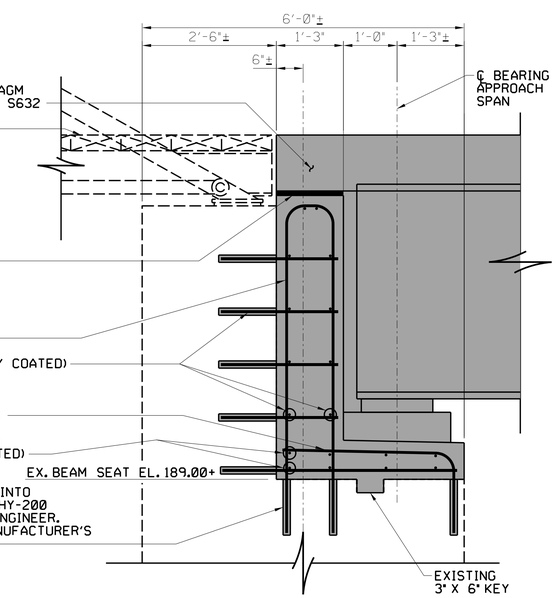

SECTION L-L

1 0 1

SCALE IN FEET

NOTE:

CONTRACTOR SHALL CAREFULLY
DRILL/CORE EXISTING PIER TO
ACCEPT NEW REINFORCEMENT.

LEGEND

EXISTING PIER AND SUPERSTRUCTURE ELEMENTS

PROPOSED CONSTRUCTION

REVISIONS:

DATE:	DESCRIPTION:	BY:

NVF AUBURN HEIGHTS STATE PARK
FARM LANE BRIDGE REPLACEMENT

PIER PLAN, ELEVATION, AND SECTION

SI

WALTER J. HOEY, III
LICENSE
No. 11204
DELAWARE
PROFESSIONAL ENGINEER
8/19/2021

CIVIL ENGINEER:

CENTURY ENGINEERING
CONSULTING ENGINEERS, SURVEYORS
550 BAY ROAD
DOVER, DELAWARE 19901

CONTRACT NO.: 175013.09

DESIGNED BY: BMC

DRAWN BY: BMC

CHECKED BY: TSW

DATE: OCTOBER 2020

SCALE: AS NOTED

SHEET NO.: S621

CONTRACT NO.:

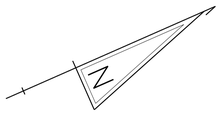

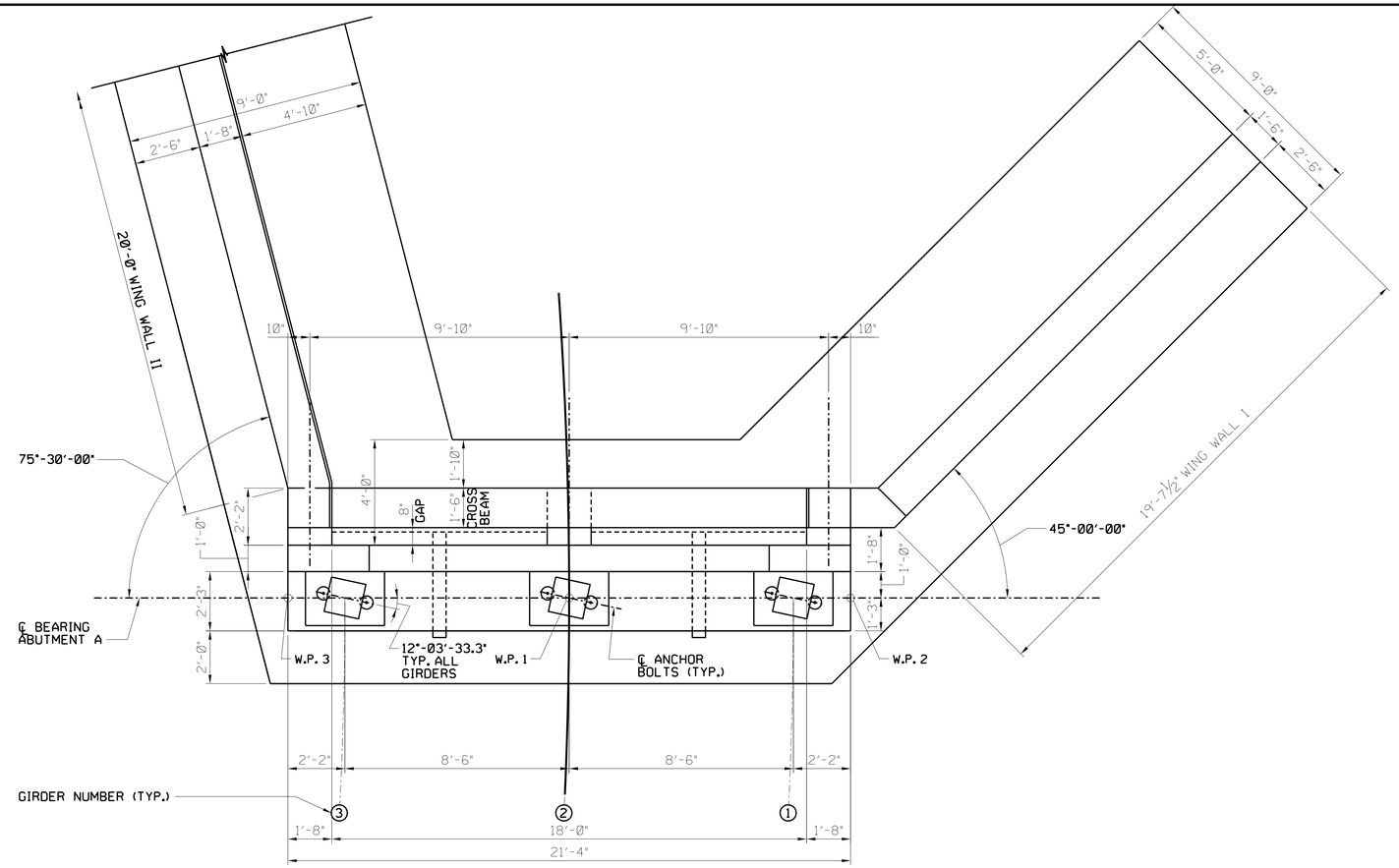

ABUTMENT A PLAN

3 2 1 0 3
SCALE IN FEET

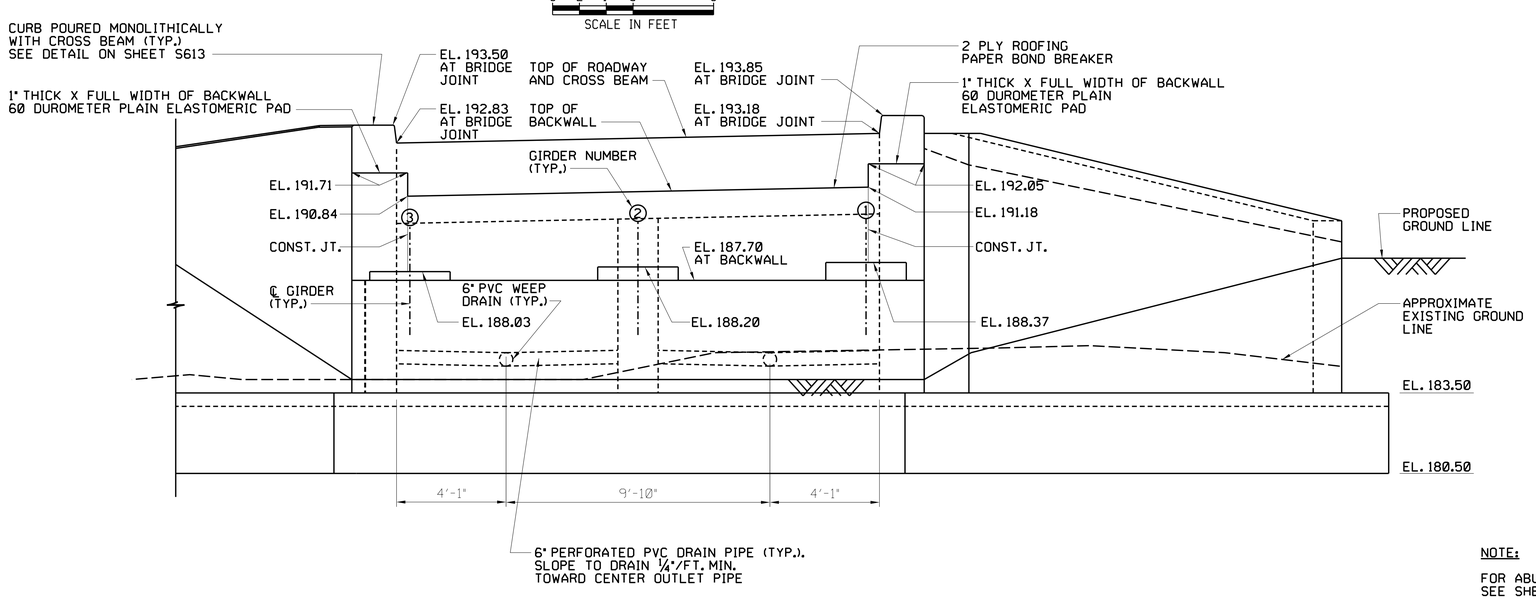

DATUM EL. 175.00

ABUTMENT A ELEVATION

3 2 1 0 3
SCALE IN FEET

NOTE:

FOR ABUTMENT SECTION, SEE SHEET S612

FOR WING WALL ELEVATIONS, SEE SHEETS S614 AND S615.

REVISIONS:

DATE:	DESCRIPTION:	BY:

NVF AUBURN HEIGHTS STATE PARK
FARM LANE BRIDGE REPLACEMENT

ABUTMENT A PLAN AND ELEVATION

SI

WALTER J. HOEY, III
LICENSE
No. 11204
DELAWARE
PROFESSIONAL ENGINEER
8/19/2021

CIVIL ENGINEER:

CENTURY ENGINEERING
CONSULTING ENGINEERS, SURVEYORS
550 BAY ROAD
DOVER, DELAWARE 19901

CONTRACT NO.: 175013.09

DESIGNED BY: BMC

DRAWN BY: BMC

CHECKED BY: TSW

DATE: OCTOBER 2020

SCALE: AS NOTED

SHEET NO.: S611

CONTRACT NO.:

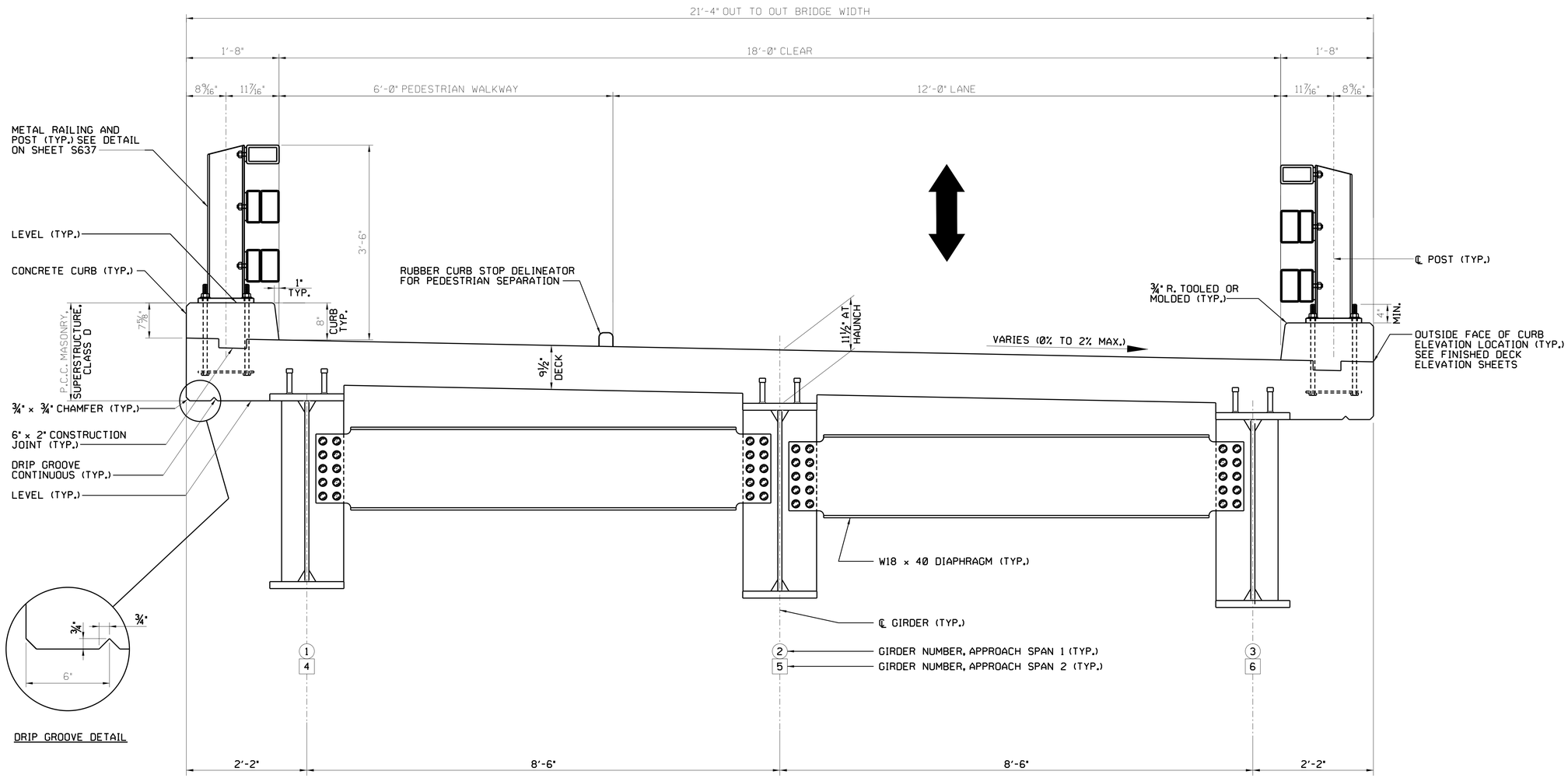

SUPERSTRUCTURE TYPICAL SECTION

1 0 1

SCALE IN FEET

NOTES:

1. FOR GIRDER DETAILS SEE SHEETS S625 - S627.
2. FOR DIAPHRAGM DETAILS SEE SHEET S629.

REVISIONS:

DATE:	DESCRIPTION:	BY:

NVF AUBURN HEIGHTS STATE PARK
FARM LANE BRIDGE REPLACEMENT

SUPERSTRUCTURE TYPICAL SECTION

SI

WALTER J. HOEL, III
LICENSE
No. 11204
DELAWARE
PROFESSIONAL ENGINEER
8/19/2021

CIVIL ENGINEER:

CENTURY ENGINEERING
CONSULTING ENGINEERS, SURVEYORS
550 BAY ROAD
DOVER, DELAWARE 19901

CONTRACT NO.: 175013.09

DESIGNED BY: CAP

DRAWN BY: MAZ

CHECKED BY: TSW

DATE: OCTOBER 2020

SCALE: AS NOTED

SHEET NO.: S623

CONTRACT NO.:

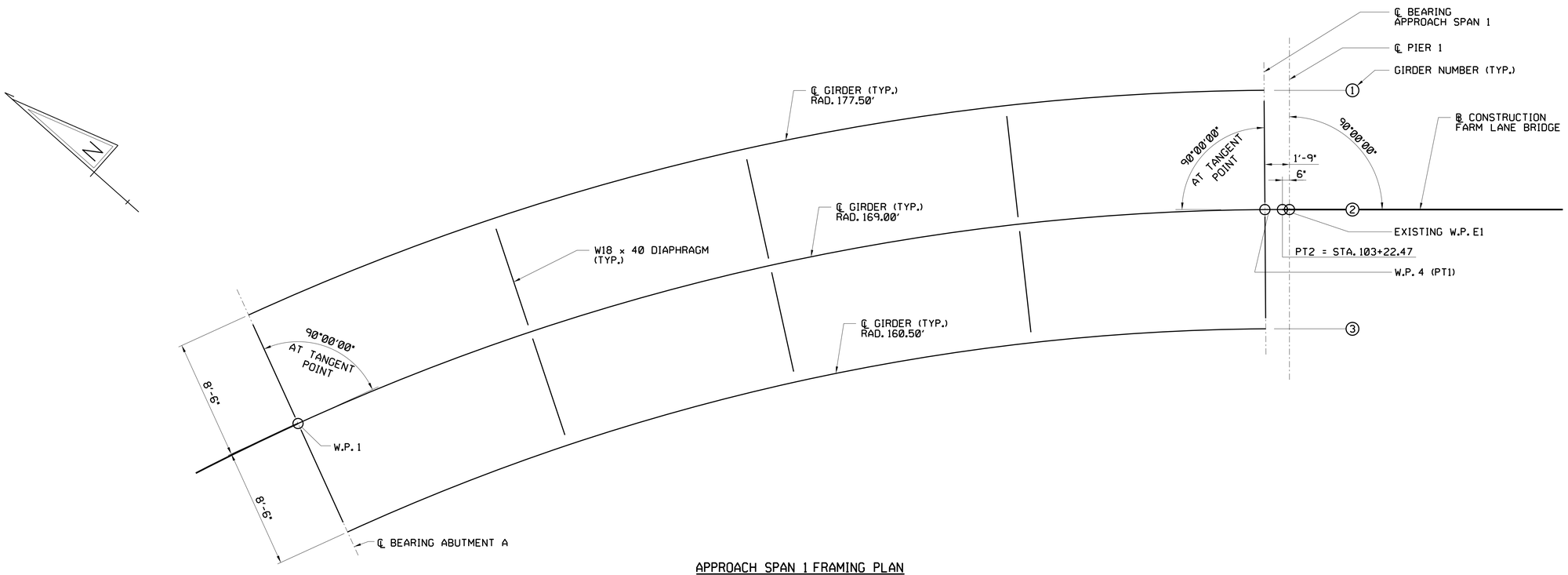

APPROACH SPAN 1 FRAMING PLAN

4 2 0 4
SCALE IN FEET

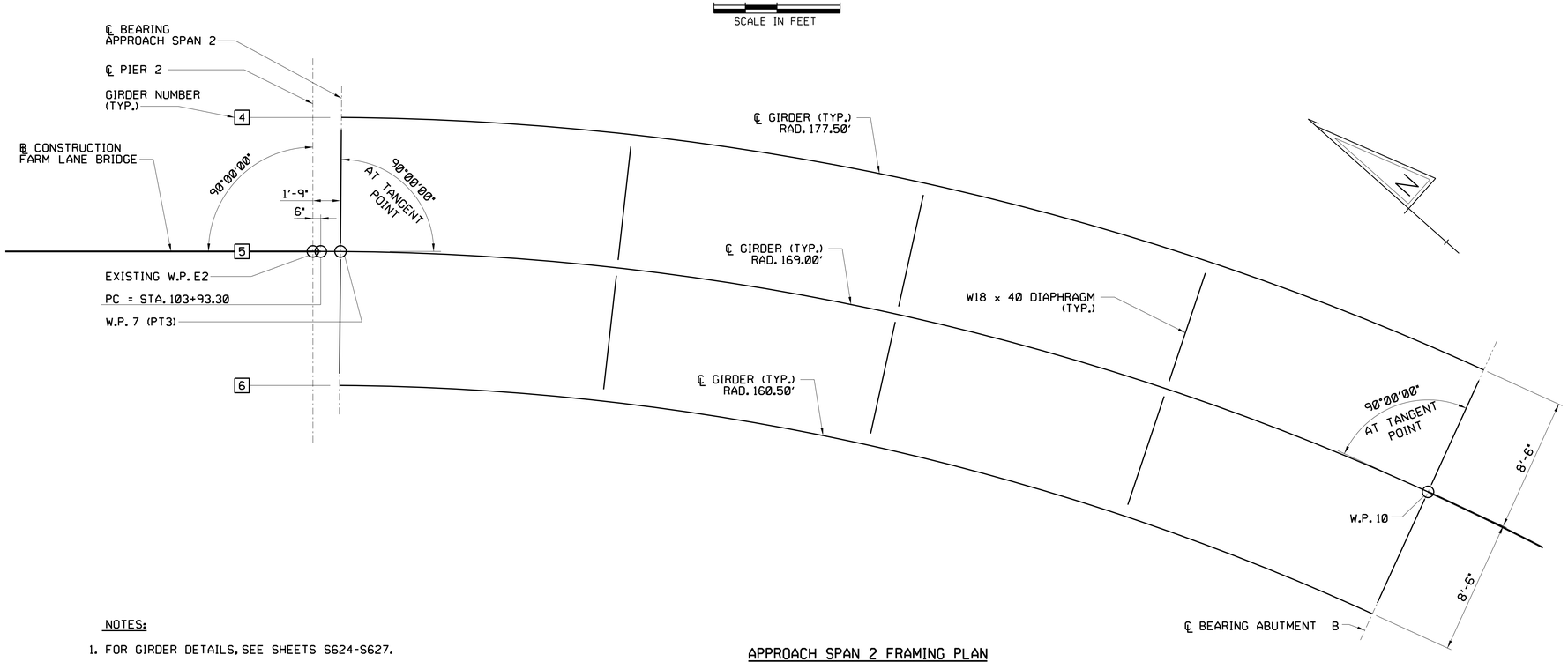

NOTES:

1. FOR GIRDER DETAILS, SEE SHEETS S624-S627.
2. FOR DIAPHRAGM DETAILS, SEE SHEET S629.

APPROACH SPAN 2 FRAMING PLAN

4 2 0 4
SCALE IN FEET

REVISIONS:

DATE:	DESCRIPTION:	BY:

NVF AUBURN HEIGHTS STATE PARK
FARM LANE BRIDGE REPLACEMENT

FRAMING PLAN

SI

WALTER J. HOEY, III
LICENSE
No. 11204
DELAWARE
PROFESSIONAL ENGINEER
8/19/2021

CIVIL ENGINEER:

CENTURY ENGINEERING
CONSULTING ENGINEERS, SURVEYORS
550 BAY ROAD
DOVER, DELAWARE 19901

CONTRACT NO.: 175013.09

DESIGNED BY: BMC
DRAWN BY: MAZ
CHECKED BY: TSW
DATE: OCTOBER 2020
SCALE: AS NOTED
SHEET NO.: S624
CONTRACT NO.:

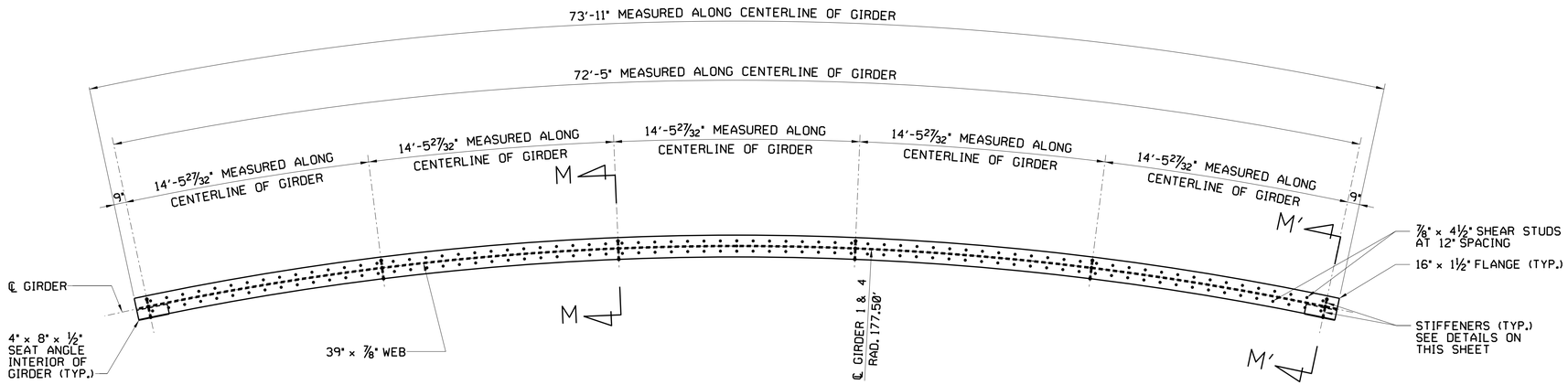

GIRDER 1 AND 4 - PLAN

4 2 0 4
SCALE IN FEET

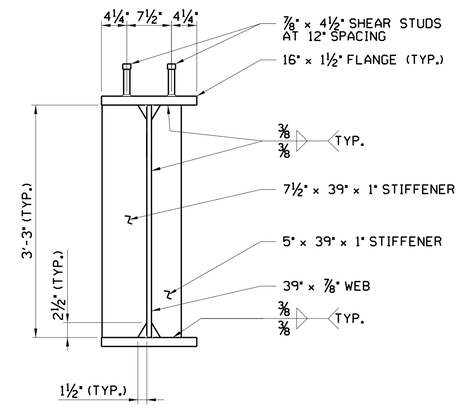

SECTION M-M

1 0 1
SCALE IN FEET

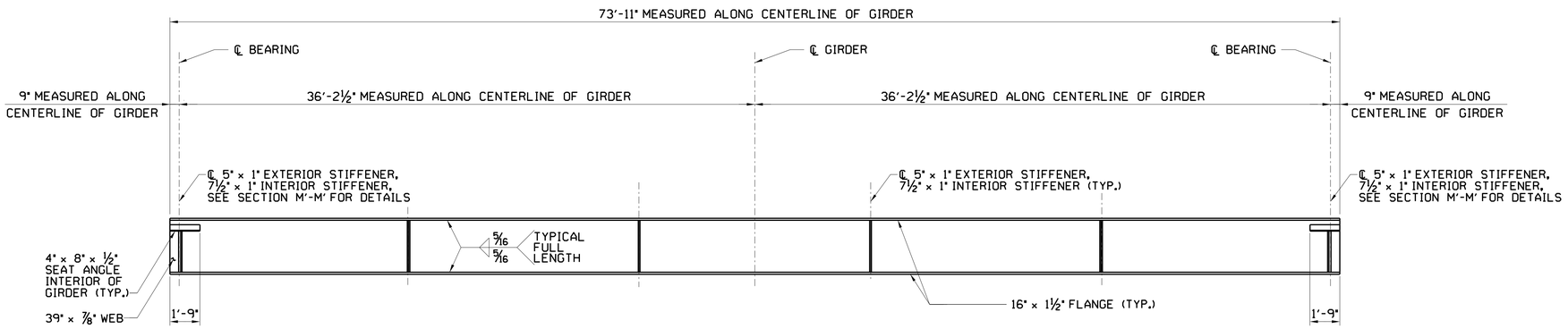

GIRDER 1 AND 4 - ELEVATION

4 2 0 4
SCALE IN FEET

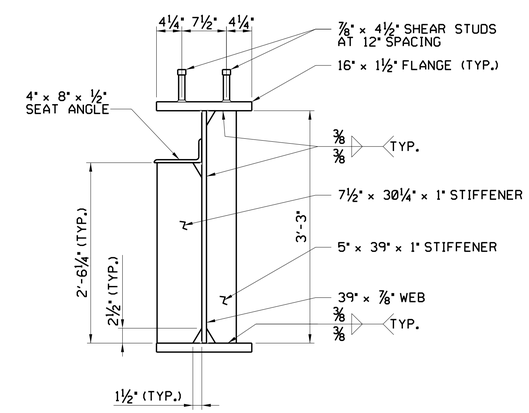

SECTION M'-M'

1 0 1
SCALE IN FEET

REVISIONS:

DATE:	DESCRIPTION:	BY:

NVF AUBURN HEIGHTS STATE PARK
FARM LANE BRIDGE REPLACEMENT

GIRDER 1 AND 4 - PLAN, ELEVATION AND SECTION

SI

WALTER J. HOEY, III
LICENSE
No. 11204
DELAWARE
PROFESSIONAL ENGINEER
8/3/2021

CIVIL ENGINEER:

CENTURY ENGINEERING
CONSULTING ENGINEERS, SURVEYORS
550 BAY ROAD
DOVER, DELAWARE 19901

CONTRACT NO.: 175013.09

DESIGNED BY: CAP

DRAWN BY: MAZ

CHECKED BY: TSW

DATE: OCTOBER 2020

SCALE: AS NOTED

SHEET NO.: S625

CONTRACT NO.:

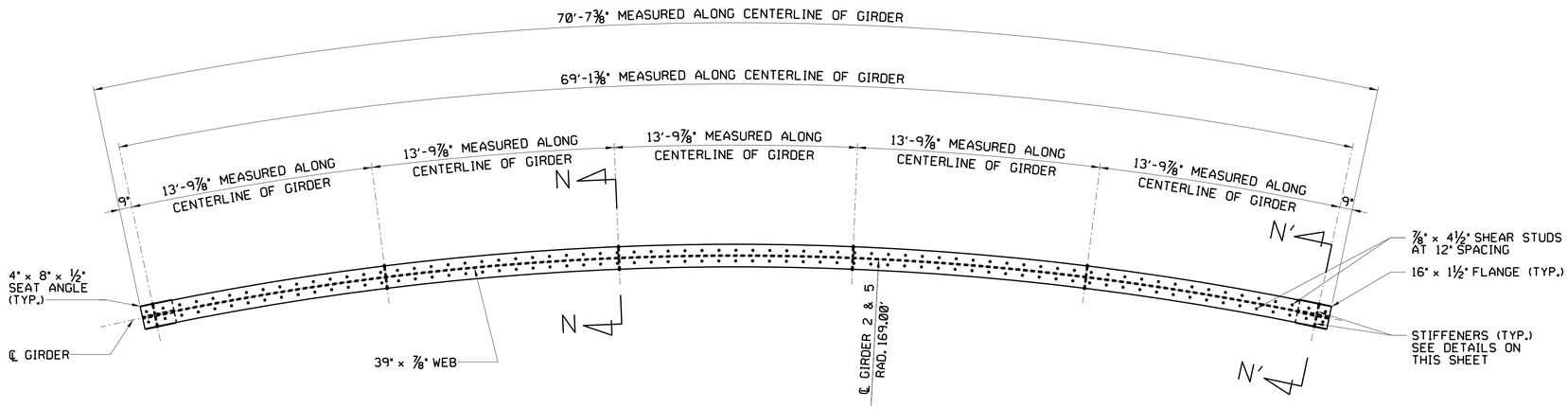

GIRDER 2 AND 5 - PLAN

4 2 0 4
SCALE IN FEET

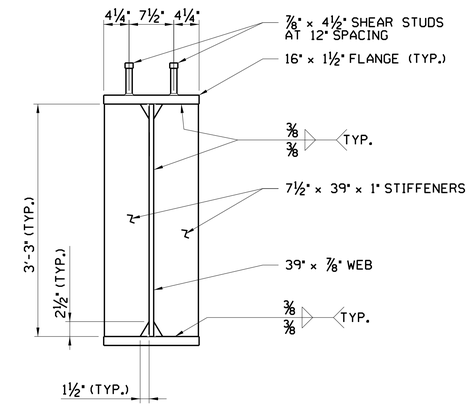

SECTION N-N

1 0 1
SCALE IN FEET

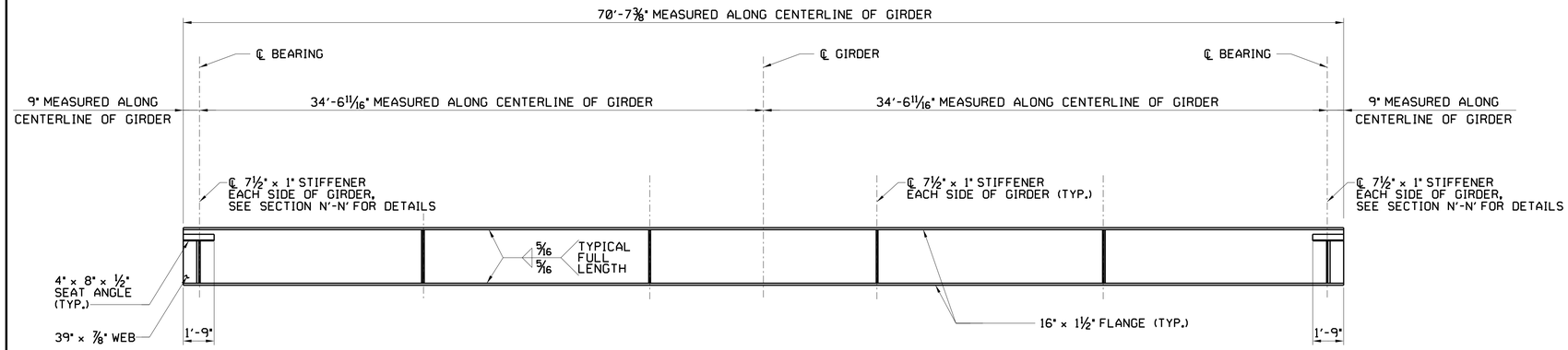

GIRDER 2 AND 5 - ELEVATION

4 2 0 4
SCALE IN FEET

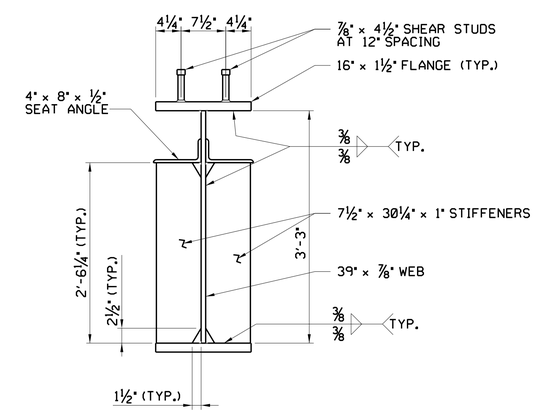

SECTION N'-N'

1 0 1
SCALE IN FEET

REVISIONS:

DATE:	DESCRIPTION:	BY:

NVF AUBURN HEIGHTS STATE PARK
FARM LANE BRIDGE REPLACEMENT

BRIDGE GIRDER 2 AND 5 - PLAN, ELEVATION AND SECTION

SI

WALTER J. HOEY, III
LICENSE
No. 11204
DELAWARE
PROFESSIONAL ENGINEER
8/19/2021

CIVIL ENGINEER:

CENTURY ENGINEERING
CONSULTING ENGINEERS, SURVEYORS
550 BAY ROAD
DOVER, DELAWARE 19901

CONTRACT NO.: 175013.09

DESIGNED BY: CAP

DRAWN BY: MAZ

CHECKED BY: TSW

DATE: OCTOBER 2020

SCALE: AS NOTED

SHEET NO.: S626

CONTRACT NO.:

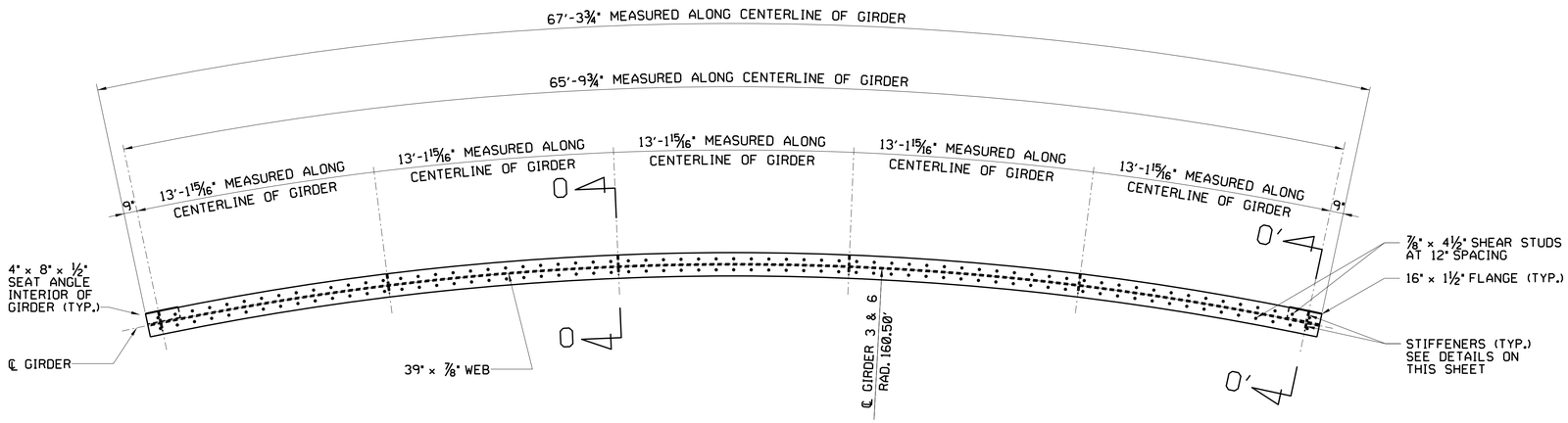

GIRDER 3 AND 6 - PLAN

4 2 0 4
SCALE IN FEET

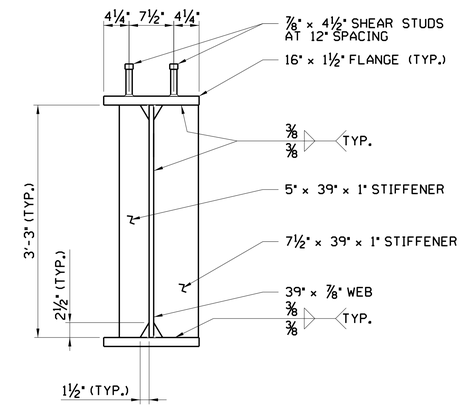

SECTION 0-0

1 0 1
SCALE IN FEET

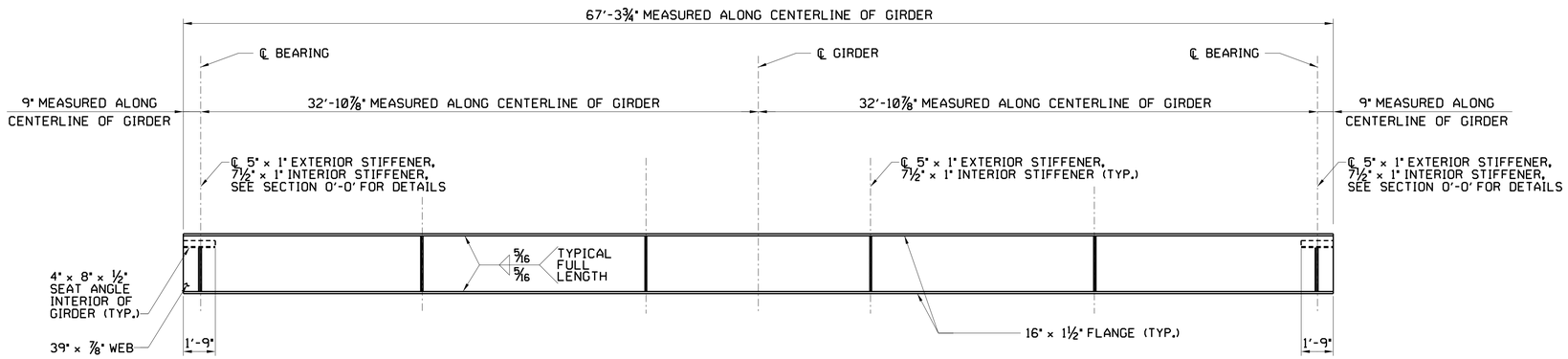

GIRDER 3 AND 6 - ELEVATION

4 2 0 4
SCALE IN FEET

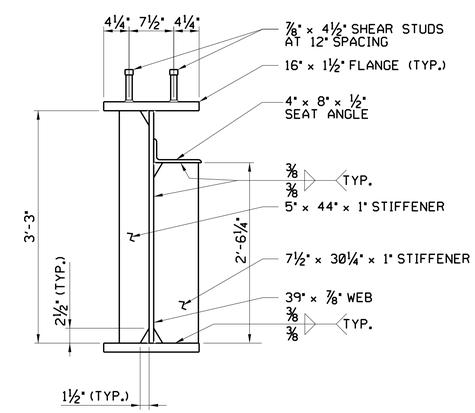

SECTION 0'-0'

1 0 1
SCALE IN FEET

REVISIONS:

DATE:	DESCRIPTION:	BY:

NVF AUBURN HEIGHTS STATE PARK
FARM LANE BRIDGE REPLACEMENT

GIRDER 3 AND 6 - PLAN, ELEVATION AND SECTION

SI

WALTER J. HOEF, III
LICENSE
No. 11204
DELAWARE
PROFESSIONAL ENGINEER
8/31/2021

CIVIL ENGINEER:

CENTURY ENGINEERING
CONSULTING ENGINEERS, SURVEYORS
550 BAY ROAD
DOVER, DELAWARE 19901

CONTRACT NO.: 175013.09

DESIGNED BY: CAP

DRAWN BY: MAZ

CHECKED BY: TSW

DATE: OCTOBER 2020

SCALE: AS NOTED

SHEET NO.: S627

CONTRACT NO.:

	℄ BRG. ABUT. A	1/4	1/2	3/4	℄ BRG. PIER 1	℄ BRG. PIER 2	1/4	1/2	3/4	℄ BRG. ABUT. B
△ STEEL	0	1/4	5/16	1/4	0	0	1/4	5/16	1/4	0
△ CONCRETE	0	1/2	11/16	1/2	0	0	1/2	11/16	1/2	0
△ S.D.L.	0	1/16	1/16	1/16	0	0	1/16	1/16	1/16	0
△ F.W.S.	0	1/16	1/16	1/16	0	0	1/16	1/16	1/16	0
TOTAL CAMBER	0	13/16	1 1/8	13/16	0	0	13/16	1 1/8	13/16	0
△ STEEL	0	1/2	11/16	5/8	0	0	1/2	11/16	5/8	0
△ CONCRETE	0	1 1/8	1 3/16	1 1/8	0	0	1 1/8	1 3/16	1 1/8	0
△ S.D.L.	0	1/16	1/8	1/16	0	0	1/16	1/8	1/16	0
△ F.W.S.	0	1/16	1/16	1/16	0	0	1/16	1/16	1/16	0
TOTAL CAMBER	0	1 11/16	2 3/8	1 13/16	0	0	1 11/16	2 3/8	1 13/16	0
△ STEEL	0	13/16	1 3/16	13/16	0	0	13/16	1 3/16	13/16	0
△ CONCRETE	0	1 13/16	2 5/8	1 13/16	0	0	1 13/16	2 5/8	1 13/16	0
△ S.D.L.	0	1/8	3/16	1/8	0	0	1/8	3/16	1/8	0
△ F.W.S.	0	1/8	3/16	1/8	0	0	1/8	3/16	1/8	0
TOTAL CAMBER	0	2 15/16	4 1/8	2 15/16	0	0	2 15/16	4 1/8	2 15/16	0

LEGEND:

STEEL = DEFLECTION DUE TO WEIGHT OF STEEL GIRDER
CONCRETE = DEFLECTION DUE TO WEIGHT OF CONCRETE SLAB
S.D.L. = DEFLECTION DUE TO WEIGHT OF SUPERIMPOSED DEAD LOAD
F.W.S. = DEFLECTION DUE TO WEIGHT OF FUTURE WEARING SURFACE
TOTAL CAMBER = TOTAL CAMBER REQUIRED

NOTES:

POSITIVE DEFLECTIONS ARE DOWNWARD DEFLECTIONS
POSITIVE CAMBERS ARE UPWARD CAMBERS

ALL GIRDERS SHALL BE CAMBERED FOR DEAD LOAD DEFLECTION AND VERTICAL CURVE ORDINATES TO THE DIMENSIONS SHOWN ON PLANS. THE CAMBER TOLERANCE IS NOTHING UNCDER TO ONE HALF INCH OVER.

REVISIONS:

DATE:	DESCRIPTION:	BY:

NVF AUBURN HEIGHTS STATE PARK
FARM LANE BRIDGE REPLACEMENT

CAMBER TABLE

SI

WALTER J. HOEF, III
LICENSE
No. 11204
DELAWARE
PROFESSIONAL ENGINEER
8/19/2021

CIVIL ENGINEER:
CENTURY ENGINEERING
CONSULTING ENGINEERS, SURVEYORS
550 BAY ROAD
DOVER, DELAWARE 19901

CONTRACT NO.: 175013.09

DESIGNED BY: CAP
DRAWN BY: MAZ
CHECKED BY: TSW
DATE: OCTOBER 2020
SCALE: AS NOTED
SHEET NO.: S628
CONTRACT NO.:

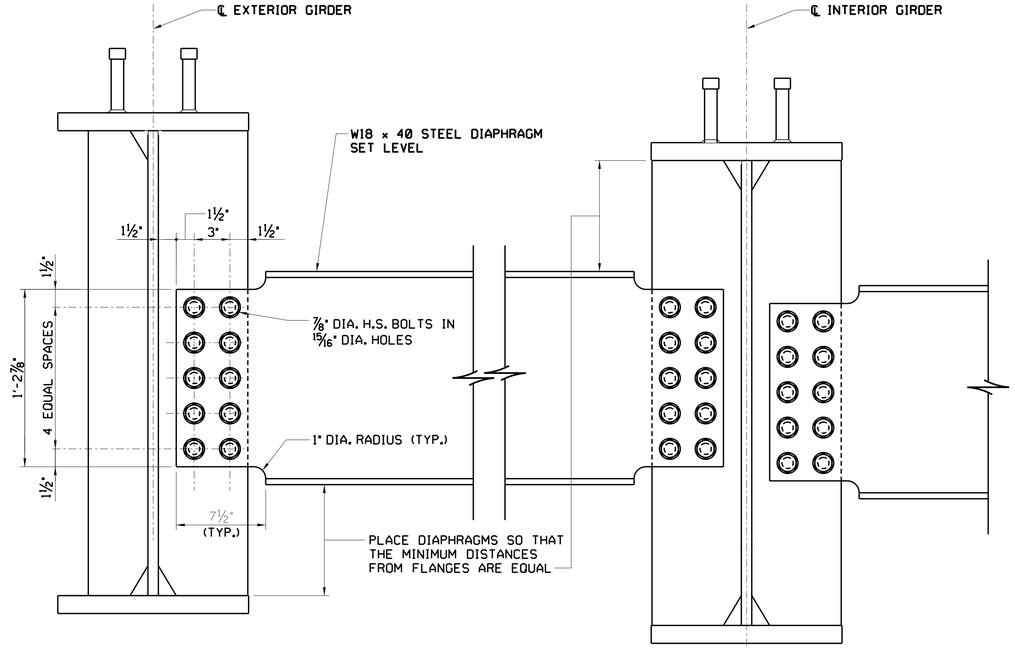

INTERMEDIATE DIAPHRAGM DETAILS

2 1 0 2
SCALE IN FEET

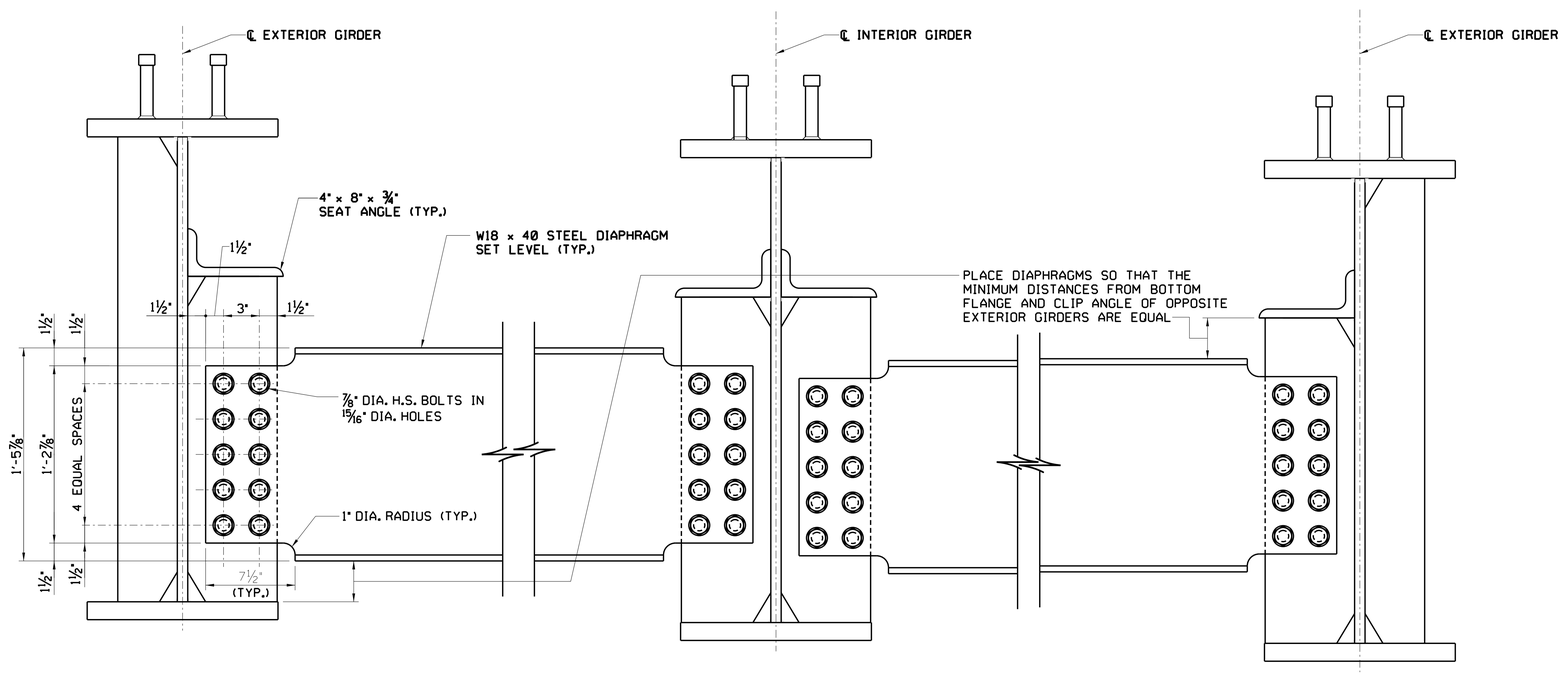

ABUTMENT AND PIER DIAPHRAGM DETAILS

2 1 0 2
SCALE IN FEET

NOTES:

1. FOR TYPICAL SECTION, SEE SHEET S623.
2. FOR FRAMING PLAN, SEE SHEET S624.
3. FOR GIRDER DETAILS, SEE SHEETS S625 - S627.

REVISIONS:

DATE:	DESCRIPTION:	BY:

NVF AUBURN HEIGHTS STATE PARK
FARM LANE BRIDGE REPLACEMENT

STEEL DIAPHRAGM DETAILS

SI

WALTER J. HOEY, III
LICENSE
No. 11204
DELAWARE
PROFESSIONAL ENGINEER
8/13/2021

CIVIL ENGINEER:

CENTURY ENGINEERING
CONSULTING ENGINEERS, SURVEYORS
550 BAY ROAD
DOVER, DELAWARE 19901

CONTRACT NO.: 175013.09

DESIGNED BY: CAP
DRAWN BY: MAZ
CHECKED BY: TSW
DATE: OCTOBER 2020
SCALE: AS NOTED
SHEET NO.: S629
CONTRACT NO.:

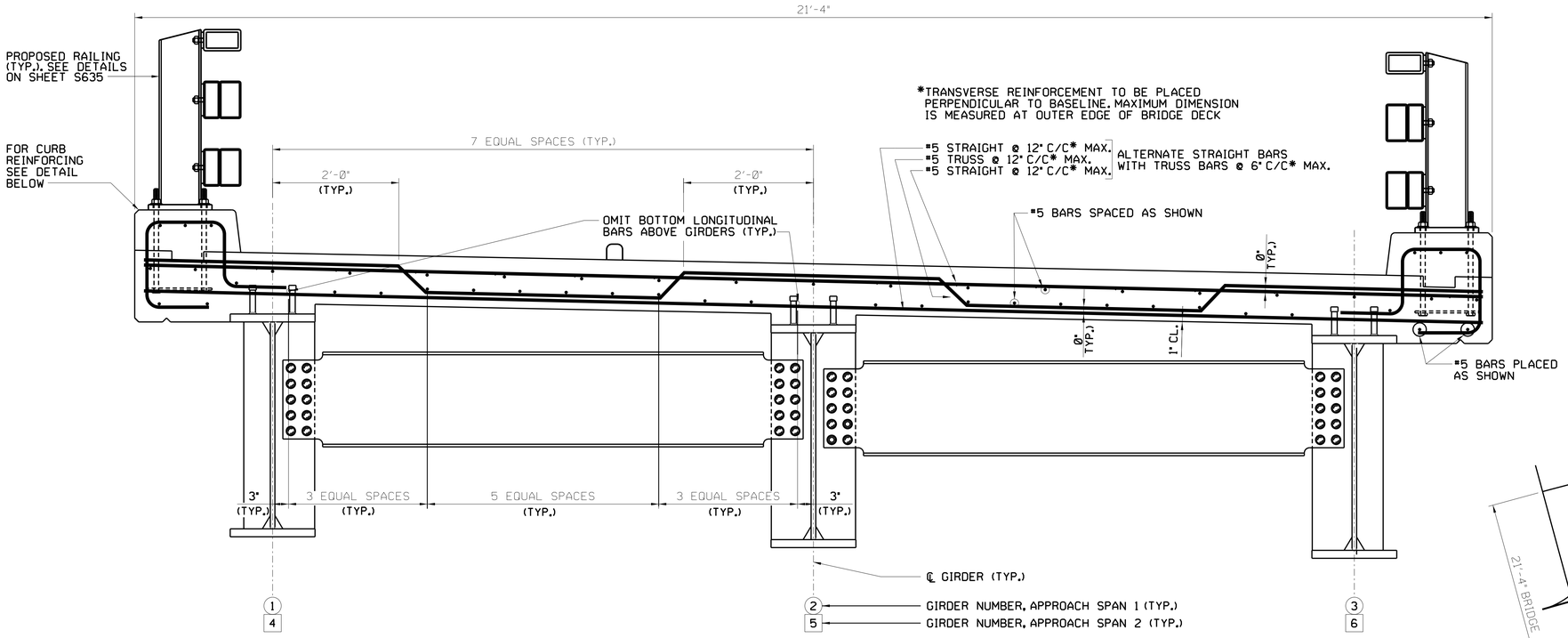

TYPICAL SECTION - REINFORCING

1 0 1
SCALE IN FEET

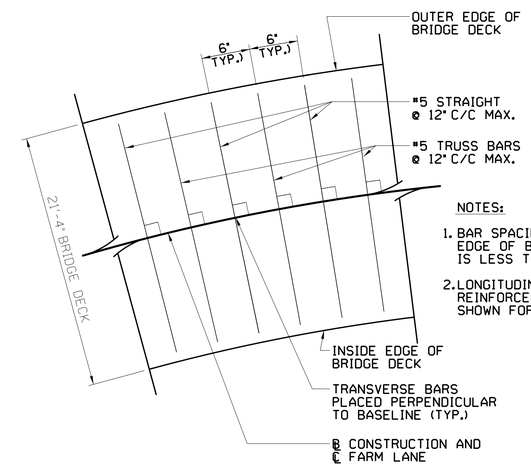

NOTES:

1. BAR SPACING AT INSIDE EDGE OF BRIDGE DECK IS LESS THAN 6".
2. LONGITUDINAL DECK REINFORCEMENT NOT SHOWN FOR CLARITY.

TRANSVERSE BAR LAYOUT PLAN

NOT TO SCALE

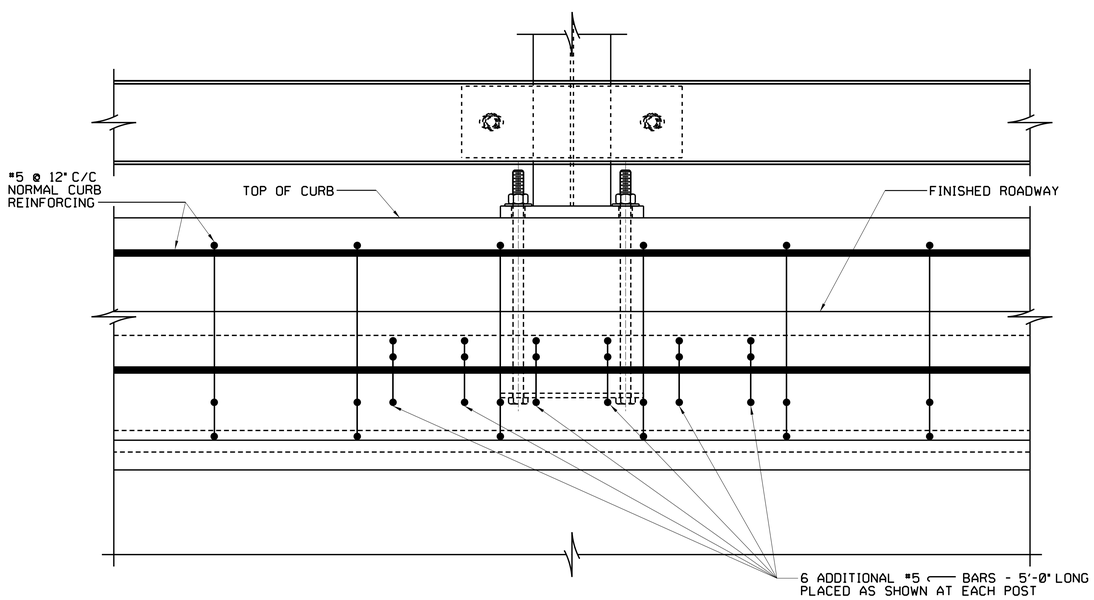

CURB REINFORCEMENT AT RAILING POST

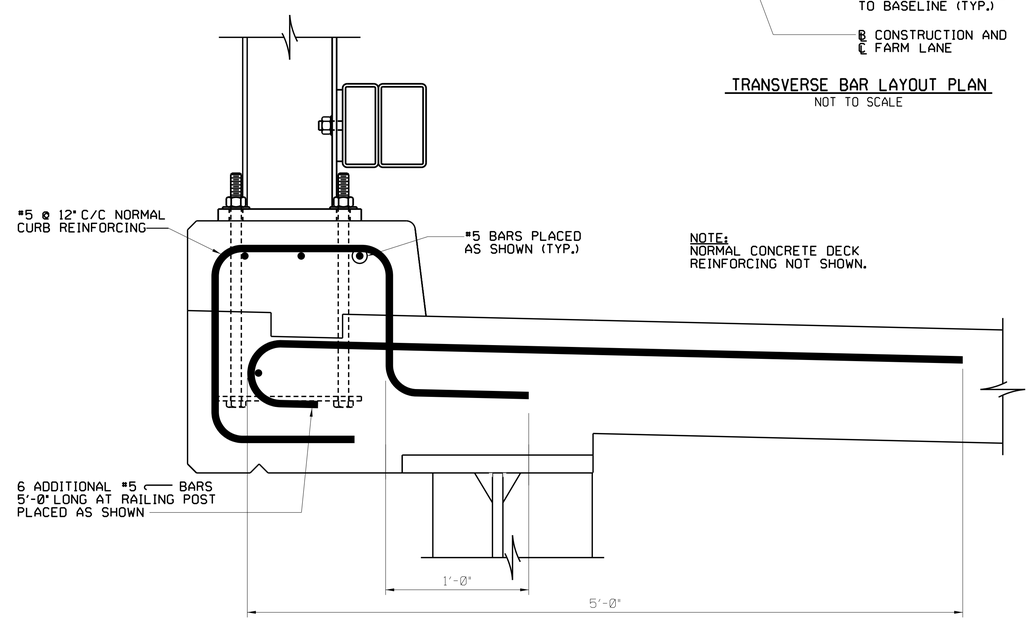

NOTE:
NORMAL CONCRETE DECK REINFORCING NOT SHOWN.

TYPICAL CURB SECTION

CURB REINFORCING DETAILS

2 1 0 2
SCALE IN FEET

NOTES:

1. FOR DIMENSIONS AND NOTES, SEE BRIDGE TYPICAL SECTION ON SHEET S623.
2. FOR BRIDGE RAILING DETAILS, SEE RAILING DETAILS ON SHEET S637.

REVISIONS:

DATE:	DESCRIPTION:	BY:

NVF AUBURN HEIGHTS STATE PARK
FARM LANE BRIDGE REPLACEMENT

BRIDGE DECK REINFORCING DETAILS

SI

WALTER J. HOEY, III
LICENSE
No. 11204
DELAWARE
PROFESSIONAL ENGINEER
8/19/2021

CIVIL ENGINEER:

CENTURY ENGINEERING
CONSULTING ENGINEERS, SURVEYORS
550 BAY ROAD
DOVER, DELAWARE 19901

CONTRACT NO.: 175013.09

DESIGNED BY: CAP
DRAWN BY: MAZ
CHECKED BY: TSW
DATE: OCTOBER 2020
SCALE: AS NOTED
SHEET NO.: S630
CONTRACT NO.:

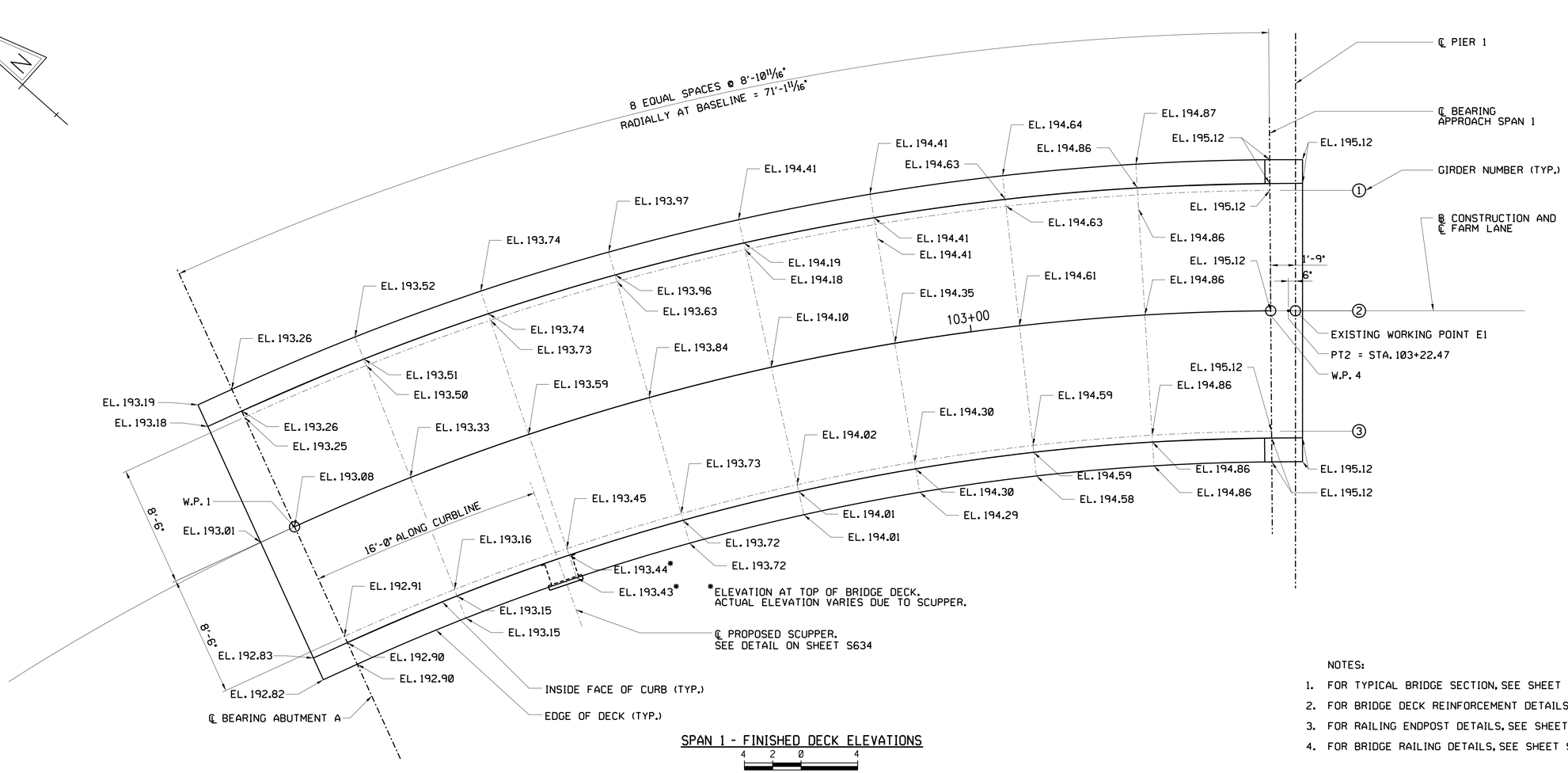

SPAN 1 - FINISHED DECK ELEVATIONS

4 2 0 4
SCALE IN FEET

NOTES:

1. FOR TYPICAL BRIDGE SECTION, SEE SHEET S623.
2. FOR BRIDGE DECK REINFORCEMENT DETAILS, SEE SHEET S630.
3. FOR RAILING ENDPOST DETAILS, SEE SHEET S636.
4. FOR BRIDGE RAILING DETAILS, SEE SHEET S637.

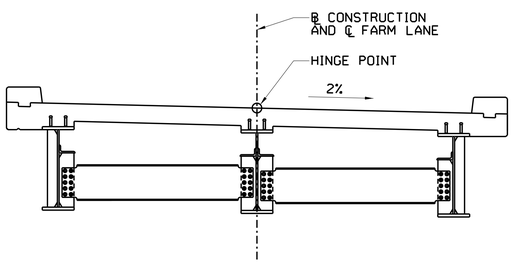

STA 102+47.45 TO STA 102+60.00
FULL 2% SUPERELEVATION

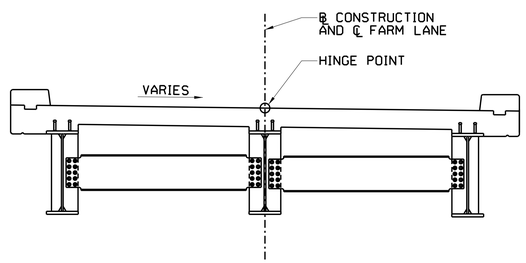

STA 102+60.00 TO STA 103+10.00
LIMITS OF TRANSITION FROM 2% TO 0%

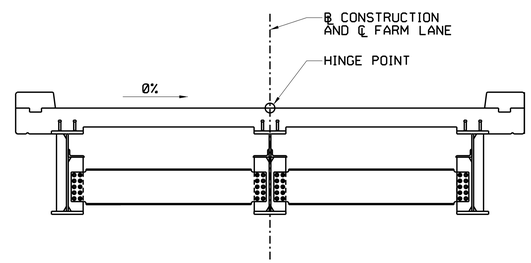

STA 103+10.00 TO STA 103+23.48
0% SUPERELEVATION

BRIDGE SUPERELEVATION DETAIL

REVISIONS:

DATE:	DESCRIPTION:	BY:

NVF AUBURN HEIGHTS STATE PARK
FARM LANE BRIDGE REPLACEMENT

APPROACH SPAN 1 FINISHED DECK ELEVATIONS

SEAL
WALTER J. HOEY, III
LICENSE
No. 11204
DELAWARE
PROFESSIONAL ENGINEER
8/19/2021

CIVIL ENGINEER:
CENTURY ENGINEERING
CONSULTING ENGINEERS, SURVEYORS
550 BAY ROAD
DOVER, DELAWARE 19901

CONTRACT NO.: 175013.09

DESIGNED BY: BMC
DRAWN BY: BMC
CHECKED BY: TSW
DATE: OCTOBER 2020
SCALE: AS NOTED
SHEET NO.: S631
CONTRACT NO.:

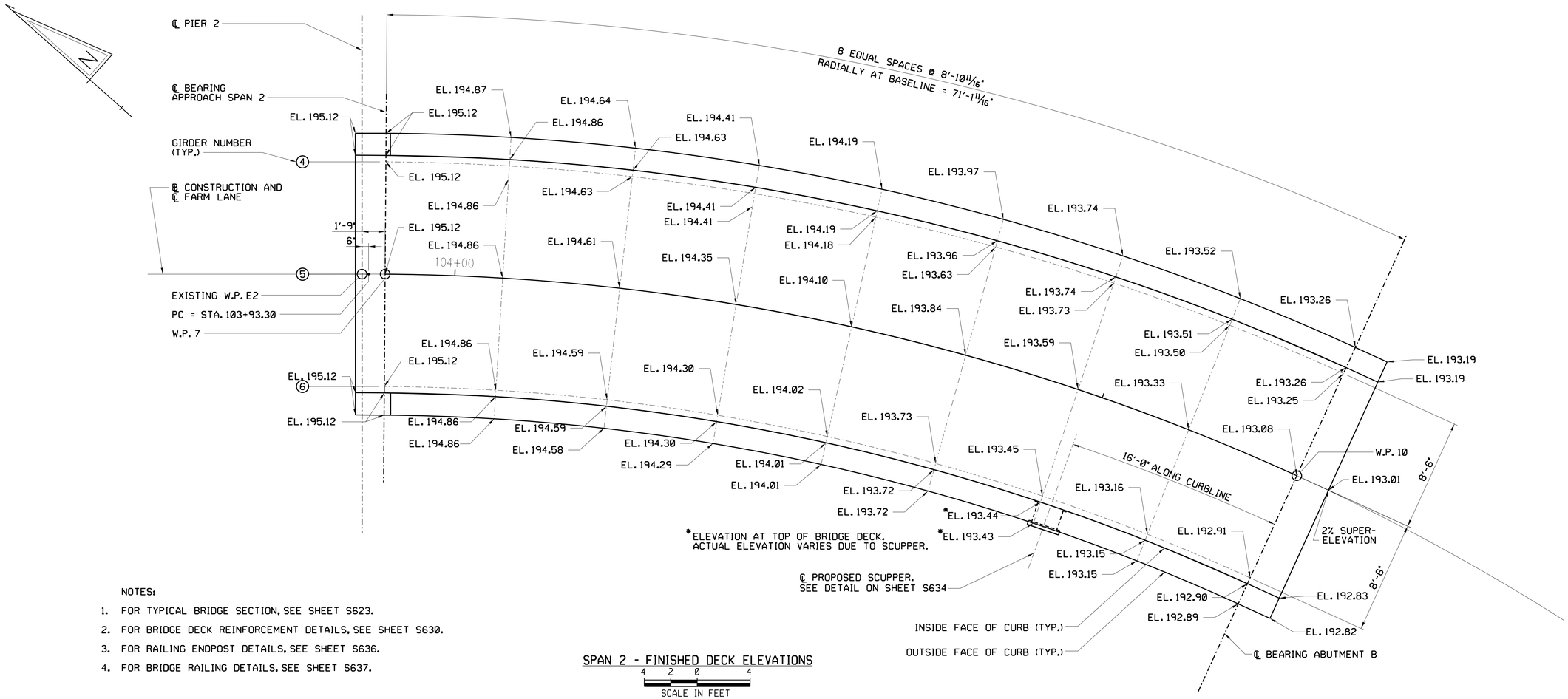

NOTES:

1. FOR TYPICAL BRIDGE SECTION, SEE SHEET S623.
2. FOR BRIDGE DECK REINFORCEMENT DETAILS, SEE SHEET S630.
3. FOR RAILING ENDPOST DETAILS, SEE SHEET S636.
4. FOR BRIDGE RAILING DETAILS, SEE SHEET S637.

SPAN 2 - FINISHED DECK ELEVATIONS

4 2 0 4
SCALE IN FEET

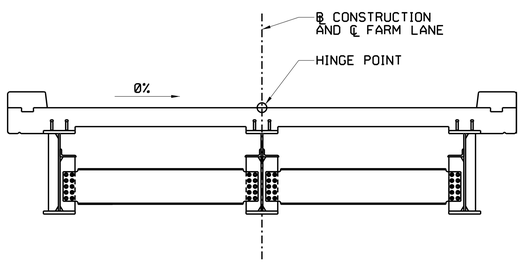

STA. 103+92.30 TO STA. 104+05.95
0% SUPERELEVATION

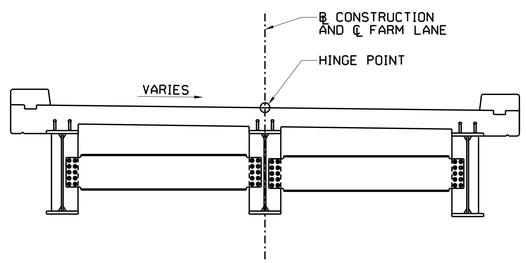

STA. 104+05.95 TO STA. 104+55.95
LIMITS OF TRANSITION FROM 0% TO 2%

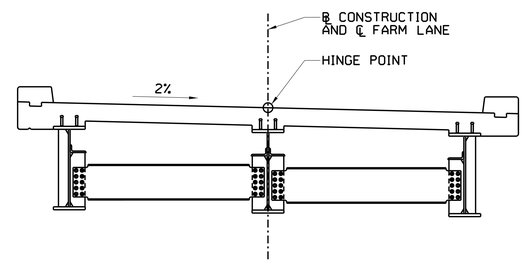

STA. 104+55.95 TO STA 104+68.50
FULL 2% SUPERELEVATION

BRIDGE SUPERELEVATION DETAIL

6 4 2 0 6
SCALE IN FEET

REVISIONS:

DATE:	DESCRIPTION:	BY:

NVF AUBURN HEIGHTS STATE PARK
FARM LANE BRIDGE REPLACEMENT

APPROACH SPAN 2 FINISHED DECK ELEVATIONS

SI

WALTER J. HOEY, III
LICENSE
No. 11204
DELAWARE
PROFESSIONAL ENGINEER
8/19/2021

CIVIL ENGINEER:

CENTURY ENGINEERING
CONSULTING ENGINEERS, SURVEYORS
550 BAY ROAD
DOVER, DELAWARE 19901

CONTRACT NO.: 175013.09

DESIGNED BY: BMC
DRAWN BY: BMC
CHECKED BY: TSW
DATE: OCTOBER 2020
SCALE: AS NOTED
SHEET NO.: S632
CONTRACT NO.:

NOTE:
RAILING NOT SHOWN
FOR CLARITY.

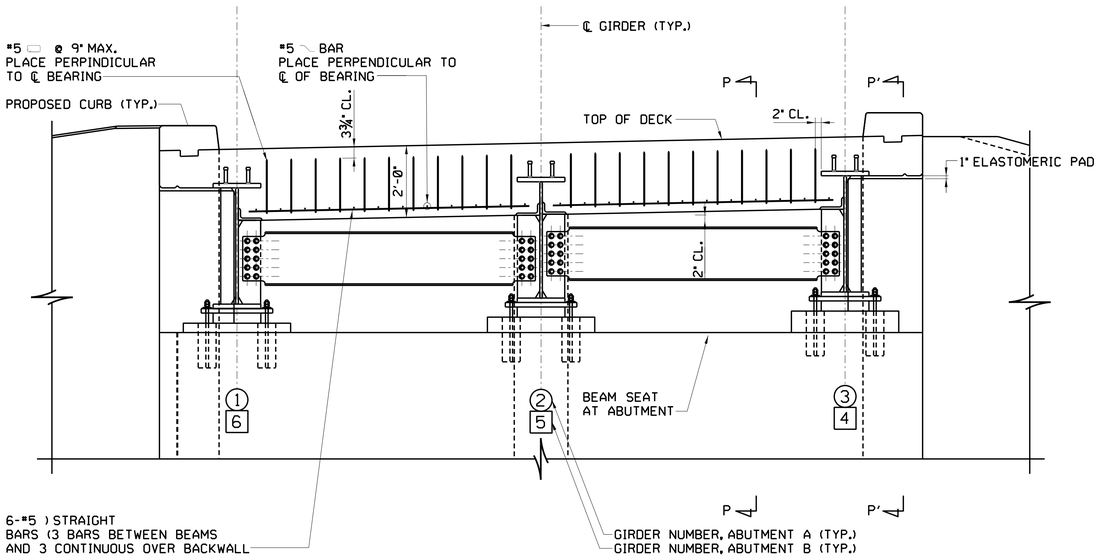

ELEVATION AT BRIDGE SEAT AREA OVER GIRDERS AT ABUTMENT

2 1 0 2
SCALE IN FEET

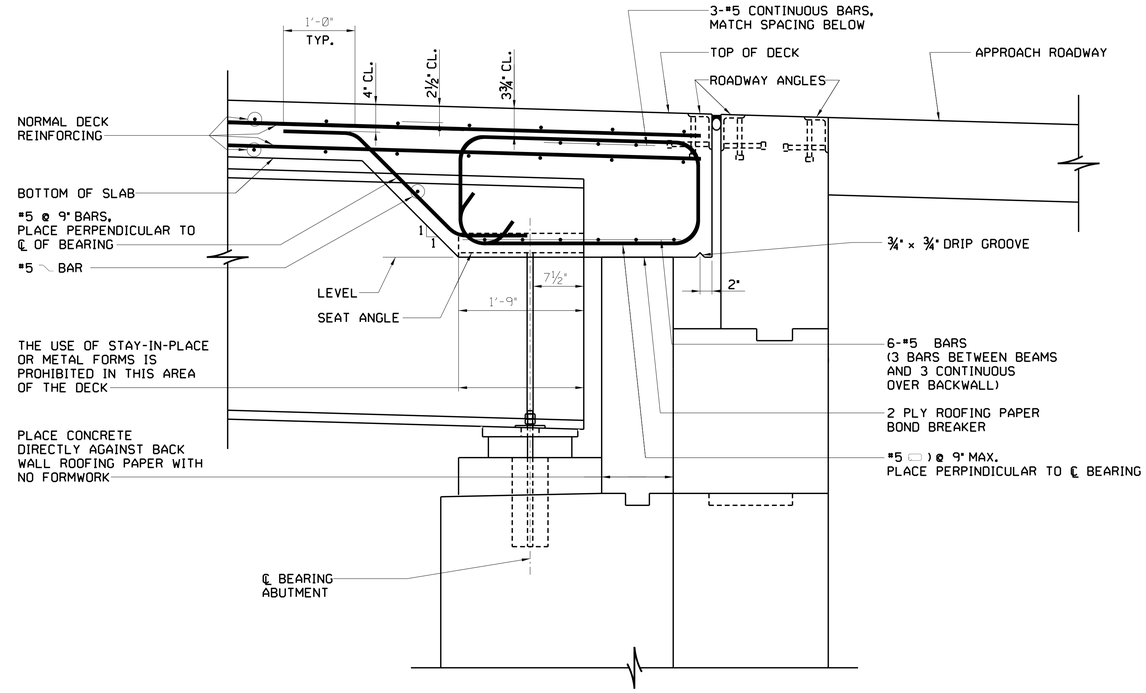

SECTION P-P

1 0 1
SCALE IN FEET

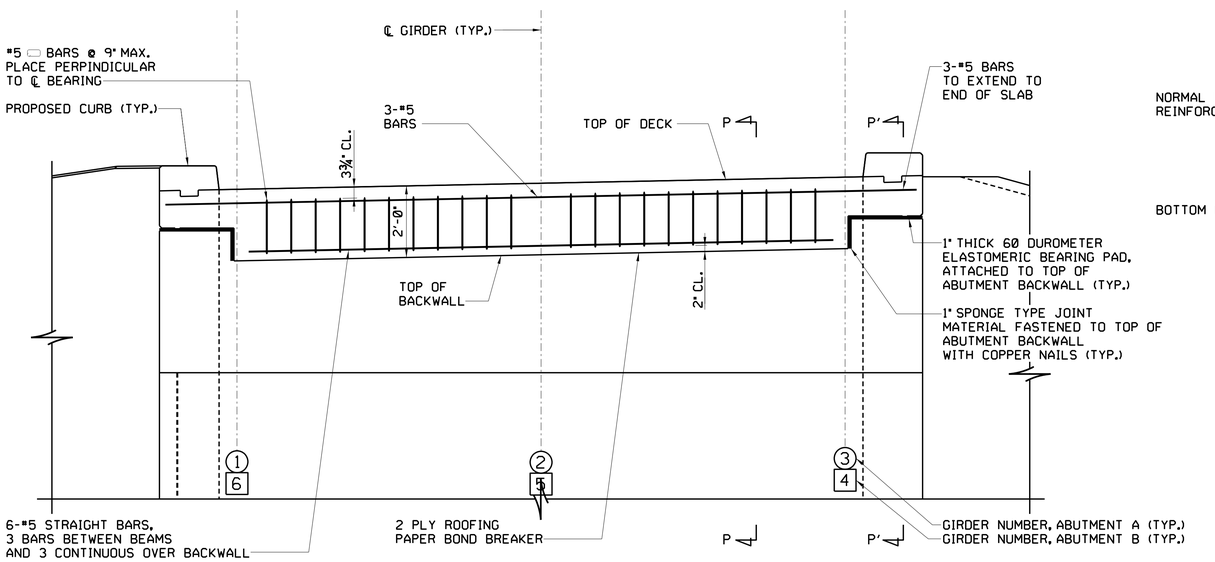

ELEVATION AT BRIDGE SEAT AREA OVER ABUTMENT BACKWALL

2 1 0 2
SCALE IN FEET

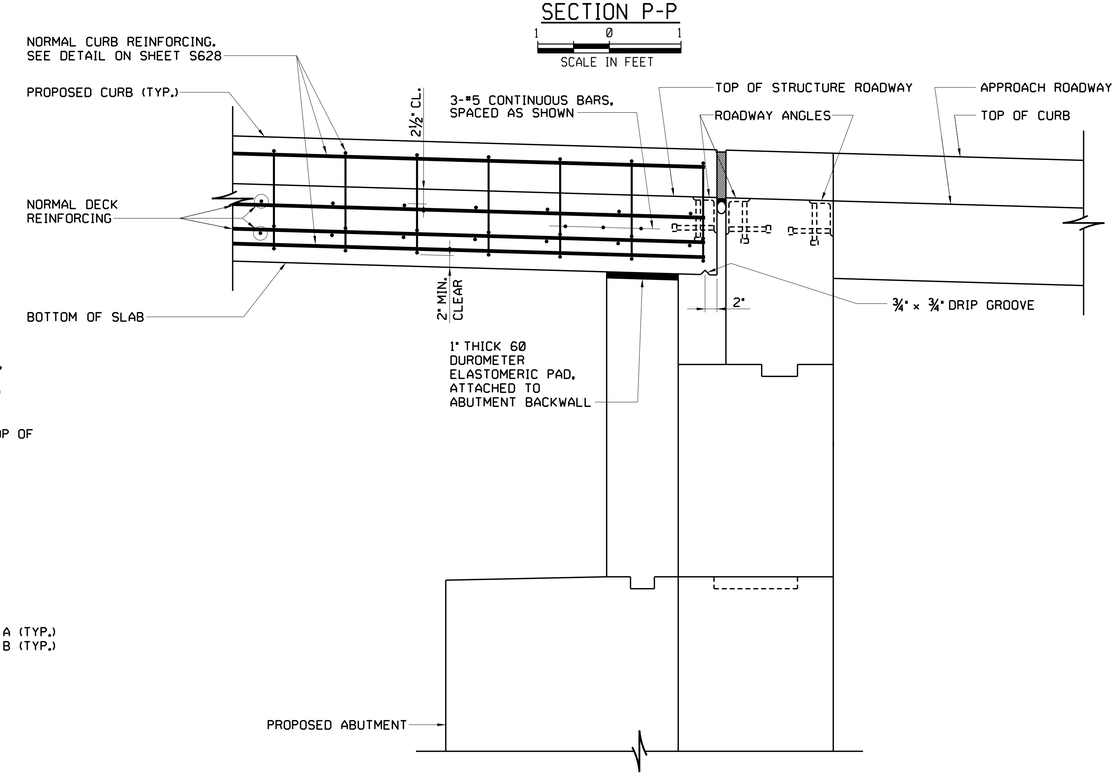

SECTION P'-P'

1 0 1
SCALE IN FEET

REVISIONS:

DATE:	DESCRIPTION:	BY:

NVF AUBURN HEIGHTS STATE PARK
FARM LANE BRIDGE REPLACEMENT

CONCRETE DIAPHRAGM DETAILS AT ABUTMENT

SI

WALTER J. HOEY, III
LICENSE
No. 11204
DELAWARE
PROFESSIONAL ENGINEER
8/19/2021

CIVIL ENGINEER:
CENTURY ENGINEERING
CONSULTING ENGINEERS, SURVEYORS
550 BAY ROAD
DOVER, DELAWARE 19901

CONTRACT NO.: 175013.09

DESIGNED BY: CAP
DRAWN BY: MAZ
CHECKED BY: TSW
DATE: OCTOBER 2020
SCALE: AS NOTED
SHEET NO.: S633
CONTRACT NO.:

NOTE:
RAILING NOT SHOWN FOR CLARITY.

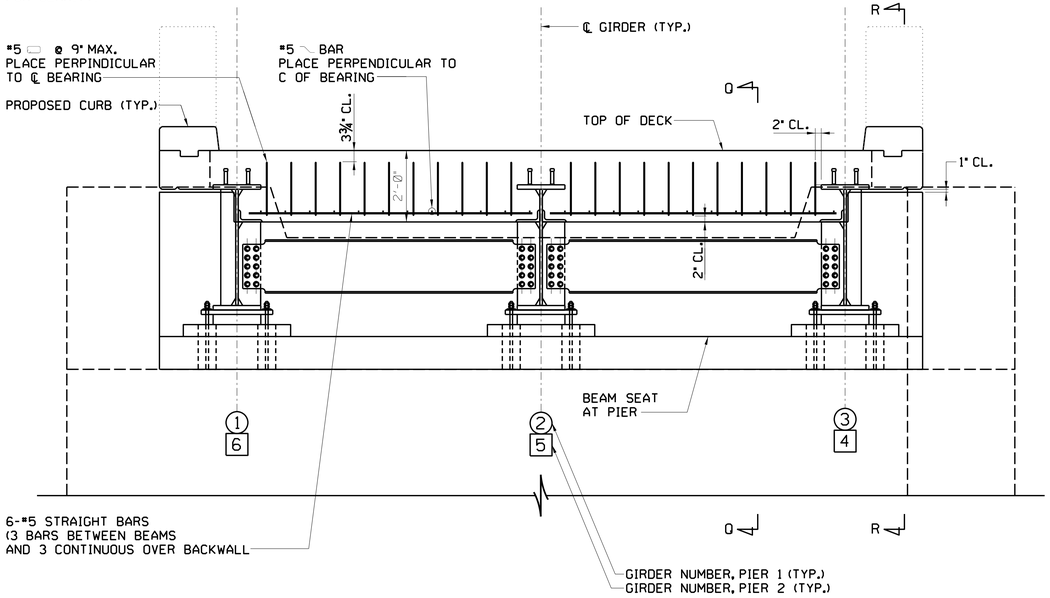

ELEVATION AT BRIDGE SEAT AREA OVER GIRDERS AT PIER

2 1 0 2
SCALE IN FEET

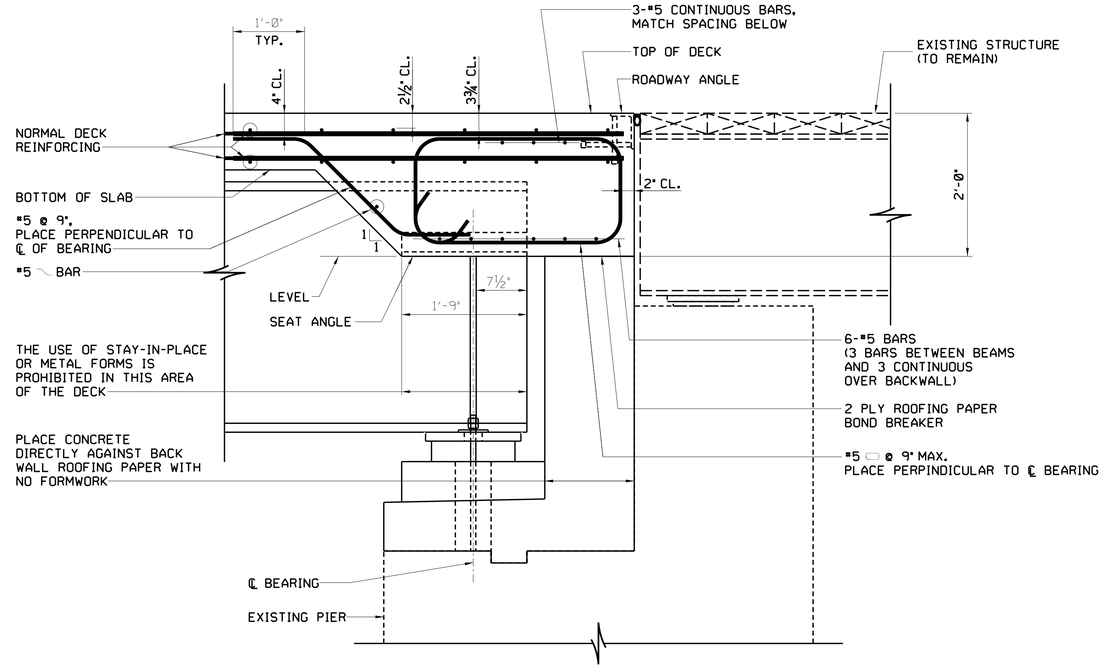

SECTION Q-Q

1 0 1
SCALE IN FEET

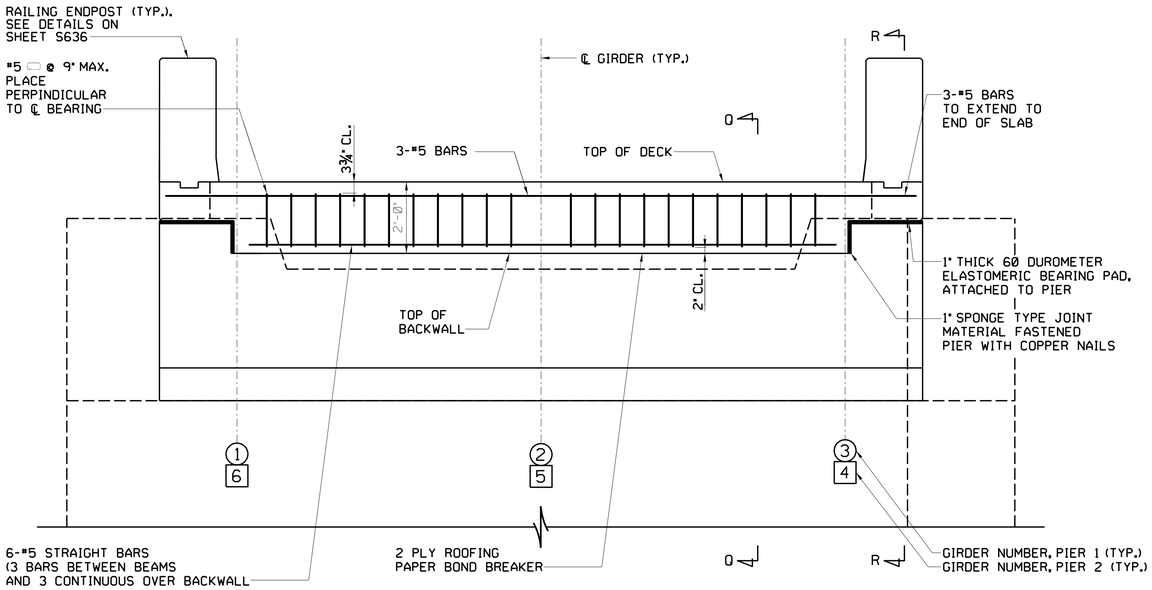

ELEVATION AT BRIDGE SEAT AREA OVER PIER BACKWALL

2 1 0 2
SCALE IN FEET

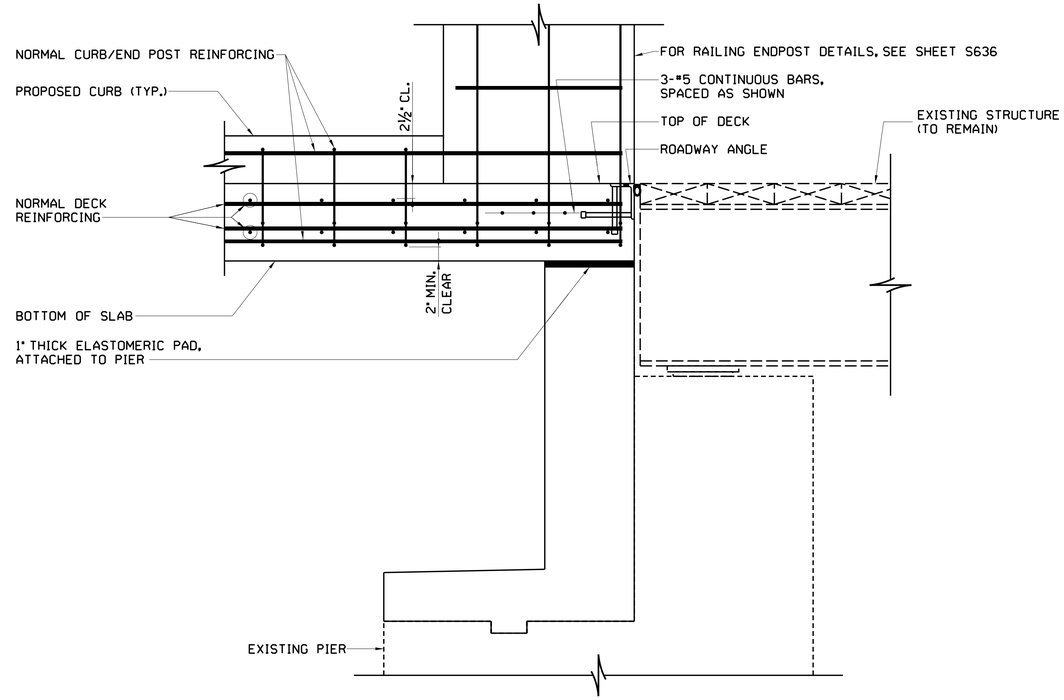

SECTION R-R

1 0 1
SCALE IN FEET

REVISIONS:

DATE:	DESCRIPTION:	BY:

NVF AUBURN HEIGHTS STATE PARK
FARM LANE BRIDGE REPLACEMENT

CONCRETE DIAPHRAGM DETAILS AT PIER

SI

WALTER J. HOEL, III
LICENSE No. 11204
DELAWARE PROFESSIONAL ENGINEER
8/19/2021

CIVIL ENGINEER:
CENTURY ENGINEERING
CONSULTING ENGINEERS, SURVEYORS
550 BAY ROAD
DOVER, DELAWARE 19901

CONTRACT NO.: 175013.09

DESIGNED BY: CAP
DRAWN BY: MAZ
CHECKED BY: TSW
DATE: OCTOBER 2020
SCALE: AS NOTED
SHEET NO.: S634
CONTRACT NO.:

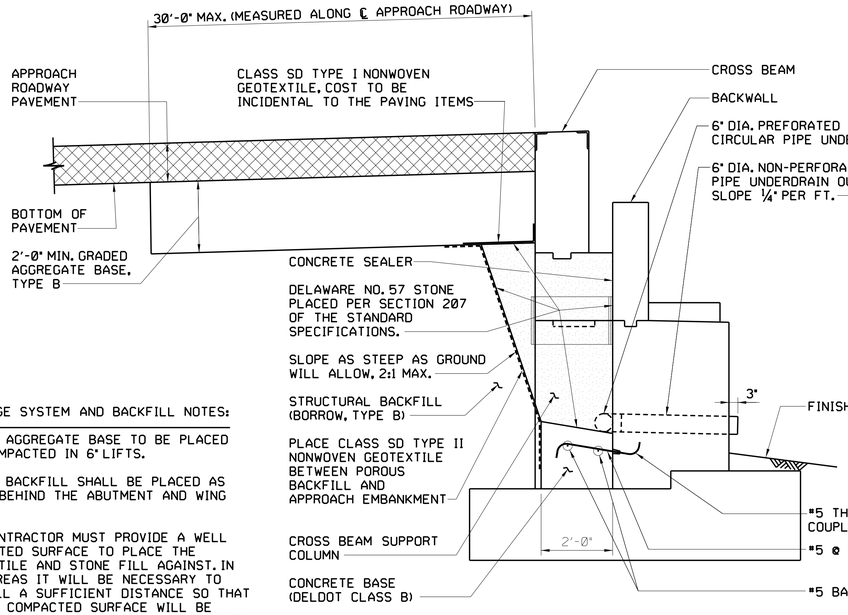

DRAINAGE SYSTEM AND BACKFILL NOTES:

1. GRADED AGGREGATE BASE TO BE PLACED AND COMPACTED IN 6" LIFTS.
2. POROUS BACKFILL SHALL BE PLACED AS SHOWN BEHIND THE ABUTMENT AND WING WALLS.
3. THE CONTRACTOR MUST PROVIDE A WELL COMPACTED SURFACE TO PLACE THE GEOTEXTILE AND STONE FILL AGAINST. IN FILL AREAS IT WILL BE NECESSARY TO OVERFILL A SUFFICIENT DISTANCE SO THAT A WELL COMPACTED SURFACE WILL BE PRODUCED WHEN THE OVERFILL IS REMOVED. THE REMOVED MATERIAL WILL BE INCIDENTAL TO THE PERTINENT STRUCTURE CONCRETE ITEMS.
4. THE COST OF THE GEOTEXTILE WITHIN THE LIMITS SHOWN WILL BE INCIDENTAL TO THE PERTINENT STRUCTURE CONCRETE ITEMS.
5. SEE PLAN SHEE S602, CONSTRUCTION SPECIFICATIONS NOTE 1 FOR ADDITIONAL INFORMATION.

SECTION - ABUTMENT

2 1 0 2
SCALE IN FEET

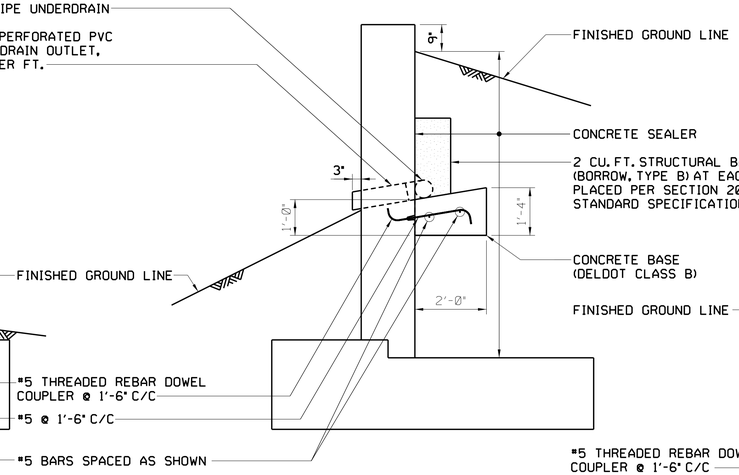

WING WALL I AND III DRAINAGE DETAILS

2 1 0 2
SCALE IN FEET

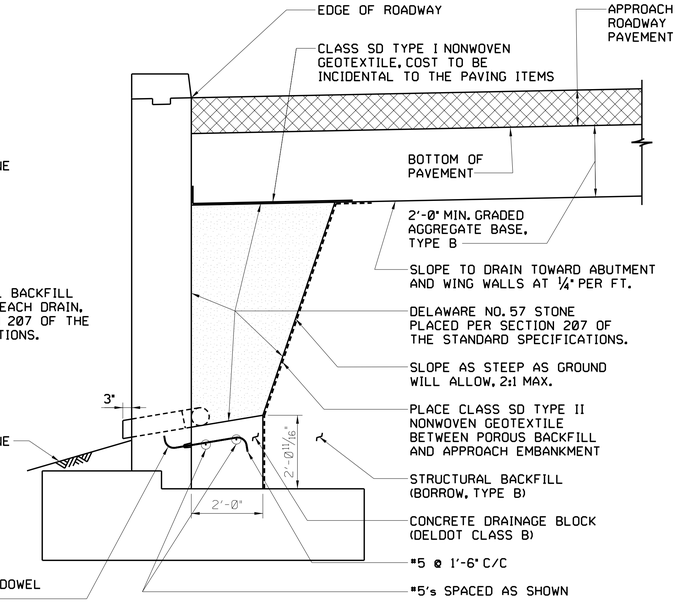

WING WALL II AND IV DRAINAGE DETAILS

2 1 0 2
SCALE IN FEET

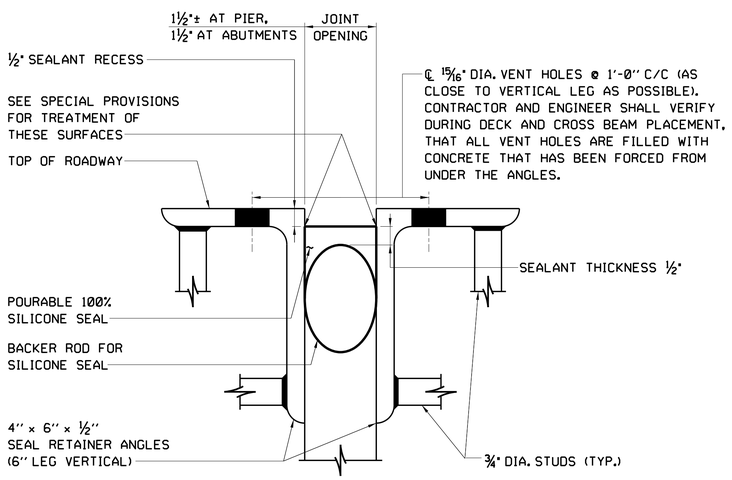

SECTION - POURABLE JOINT SEAL

NOT TO SCALE

NOTE:
JOINT AREA TO BE THOROUGHLY CLEANED IN ACCORDANCE WITH JOINT MANUFACTURER'S RECOMMENDATIONS JUST PRIOR TO PLACING OF SEAL.

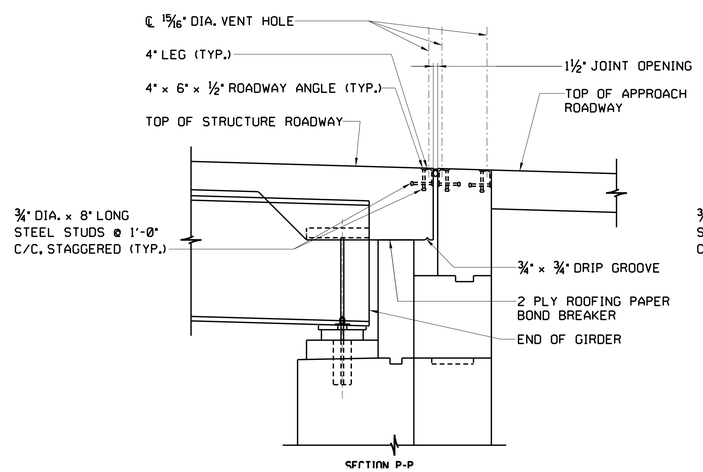

EXPANSION JOINT ANGLE DETAIL AT ABUTMENT

2 1 0 2
SCALE IN FEET

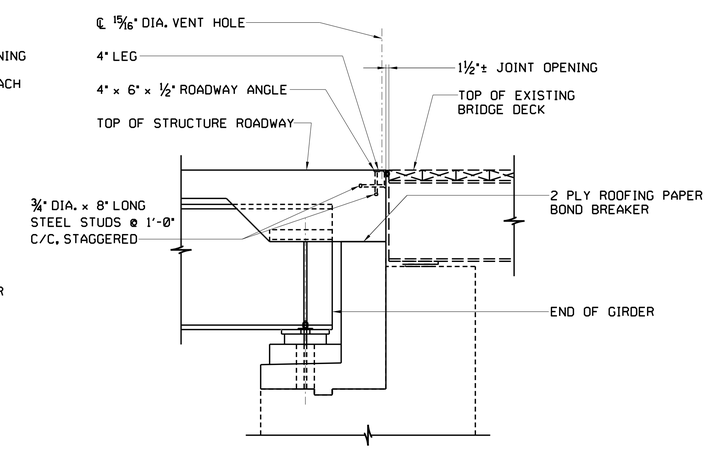

EXPANSION JOINT DETAIL AT PIER

2 1 0 2
SCALE IN FEET

REVISIONS:

DATE:	DESCRIPTION:	BY:

NVF AUBURN HEIGHTS STATE PARK
FARM LANE BRIDGE REPLACEMENT

DETAILS - I

SI

WALTER J. HOEF, III
LICENSE
No. 11204
DELAWARE
PROFESSIONAL ENGINEER
8/19/2021

CIVIL ENGINEER:
CENTURY ENGINEERING
CONSULTING ENGINEERS, SURVEYORS
550 BAY ROAD
DOVER, DELAWARE 19901

CONTRACT NO.: 175013.09

DESIGNED BY: CAP
DRAWN BY: MAZ
CHECKED BY: TSW
DATE: OCTOBER 2020
SCALE: AS NOTED
SHEET NO.: S635
CONTRACT NO.:

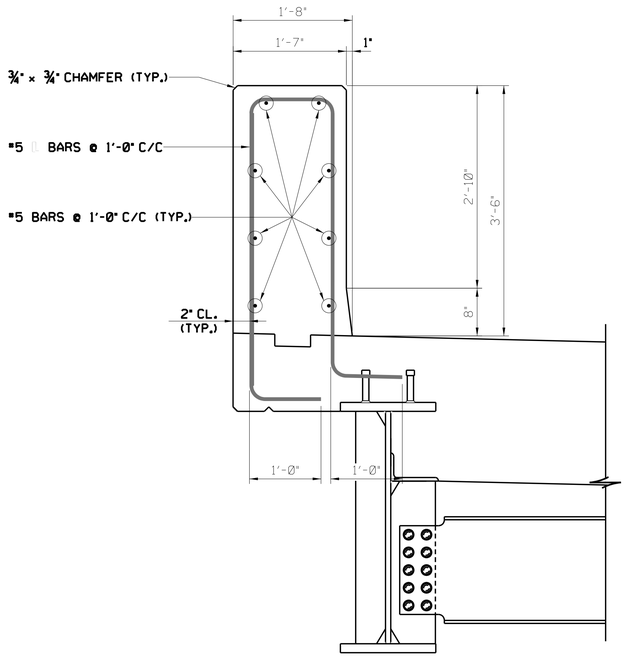

TYPICAL ENDPOST SECTION

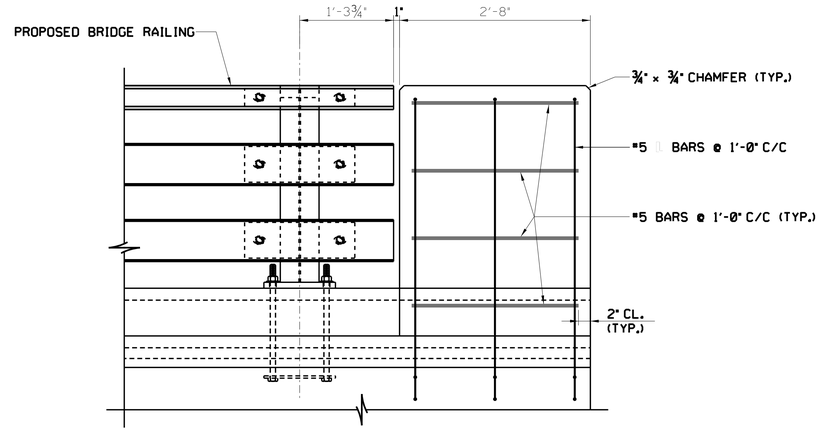

ENDPOST ELEVATION

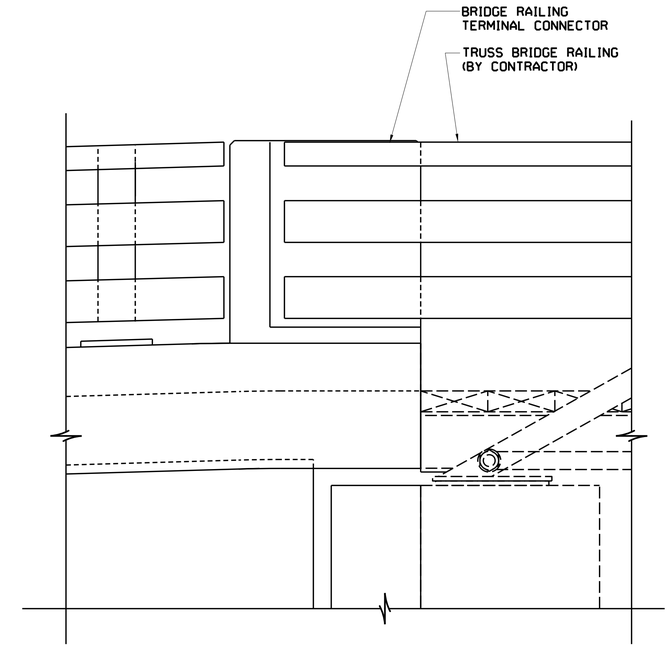

TRUSS BRIDGE RAILING CONNECTION

ENDPOST DETAILS AT PIERS

1 0 1

SCALE IN FEET

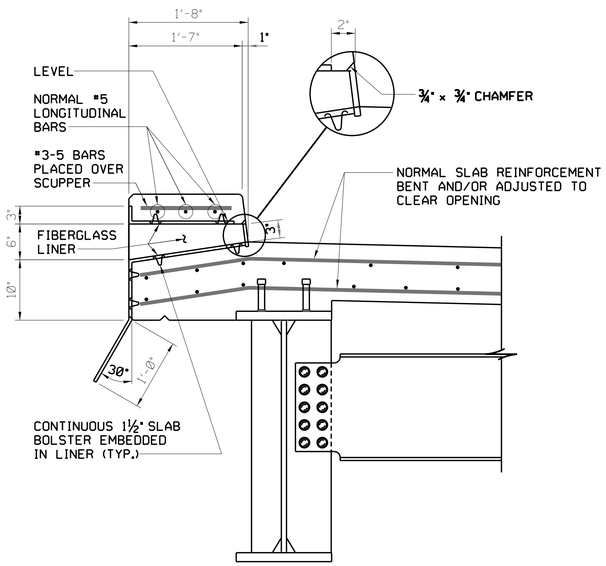

SECTION T-T

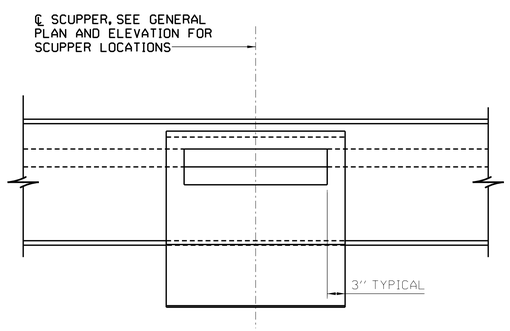

EXTERIOR ELEVATION

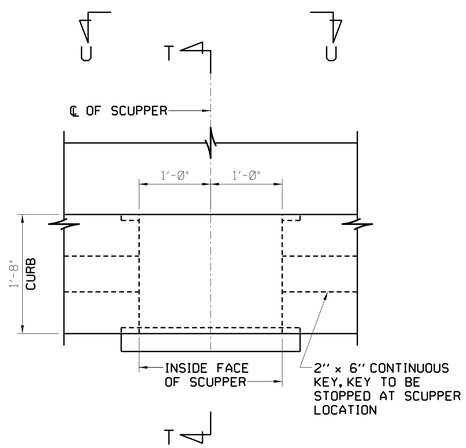

PLAN

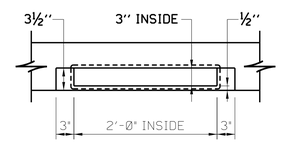

VIEW U-U

SCUPPER DETAILS

1 0 1

SCALE IN FEET

NOTES:

1. FIBERGLASS LINING SHALL EXTEND 3" BEYOND SIDES AND TOP OF OPENING ON EXTERIOR FACE OF PARAPET AND 3" MIN. BELOW BOTTOM OF SLAB ON EXTERIOR FACE OF PARAPET. SLAB BOLSTERS SHALL HAVE UPTURNED FEET EMBEDDED IN THE FIBERGLASS.
2. NORMAL PARAPET AND SIDEWALK REINFORCING SHALL BE PROVIDED IN ALL SECTIONS WITHOUT OPENINGS.
3. THE SURFACE OF THE FIBERGLASS DESIGNED TO BOND WITH OTHER MATERIALS SHALL BE FREE OF BOND INHIBITING AGENTS.

REVISIONS:

DATE:	DESCRIPTION:	BY:

NVF AUBURN HEIGHTS STATE PARK
FARM LANE BRIDGE REPLACEMENT

DETAILS - II

SI

WALTER J. HOEY, III
LICENSE
No. 11204
DELAWARE
PROFESSIONAL ENGINEER
8/19/2021

CIVIL ENGINEER:

CENTURY ENGINEERING
CONSULTING ENGINEERS, SURVEYORS
550 BAY ROAD
DOVER, DELAWARE 19901

CONTRACT NO.: 175013.09

DESIGNED BY: CAP

DRAWN BY: MAZ

CHECKED BY: TSW

DATE: OCTOBER 2020

SCALE: AS NOTED

SHEET NO.: S636

CONTRACT NO.:

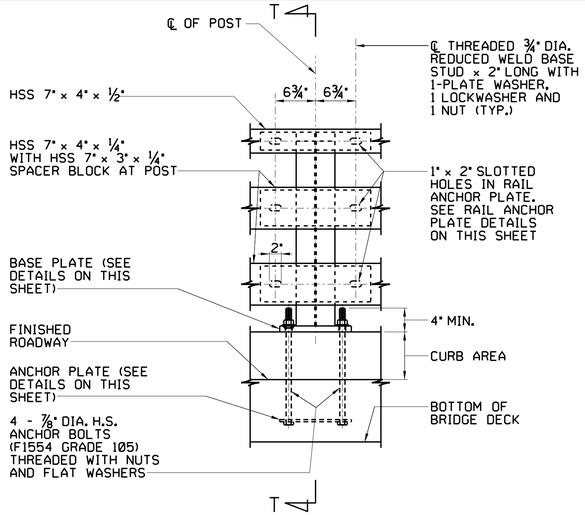

ELEVATION

1 0 1
SCALE IN FEET

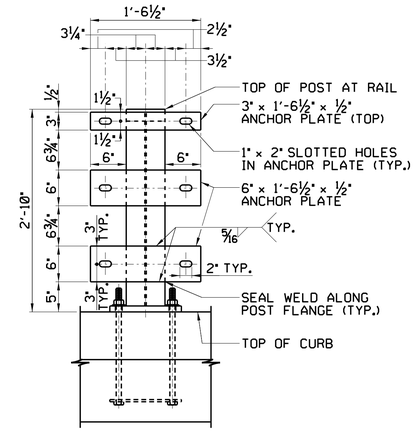

ELEVATION - RAIL ANCHOR PLATE DETAIL

1 0 1
SCALE IN FEET

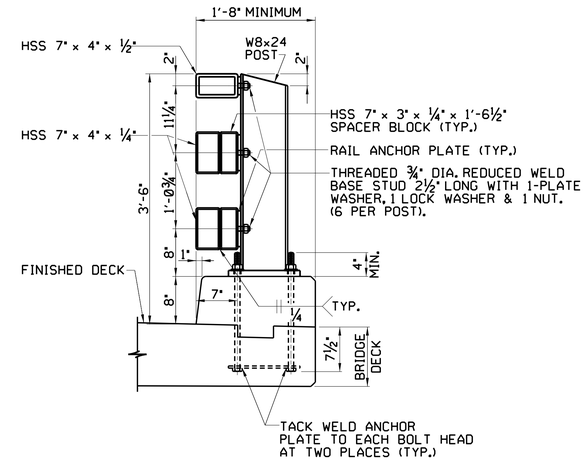

SECTION T-T

1 0 1
SCALE IN FEET

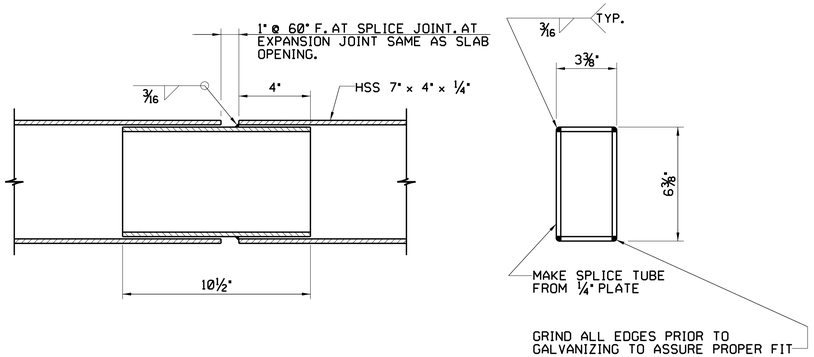

PLAN

SECTION - SPLICE TUBE

RAIL SPLICE DETAILS (TS 7" x 4" x 1/4")

4 2 0 4
SCALE IN INCHES

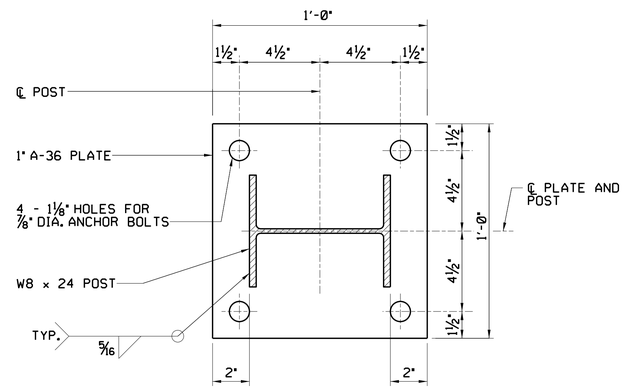

PLAN

BASE PLATE DETAIL

4 2 0 4
SCALE IN INCHES

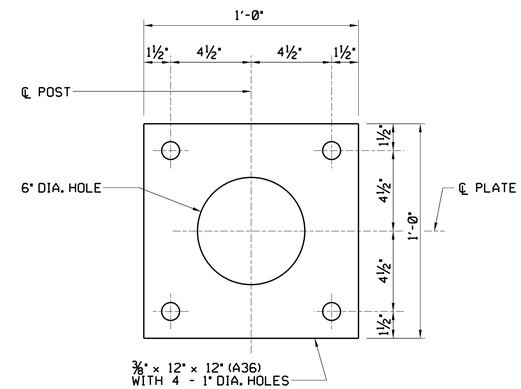

PLAN

ANCHOR PLATE DETAIL

4 2 0 4
SCALE IN INCHES

PLAN

SECTION - SPLICE TUBE

RAIL SPLICE DETAILS (TS 7" x 4" x 1/2")

4 2 0 4
SCALE IN INCHES

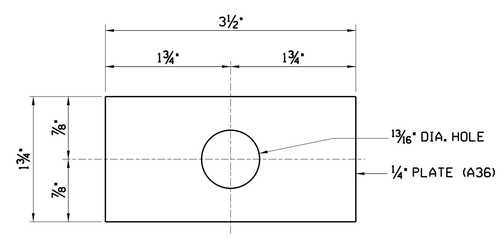

PLAN

PLATE WASHER
NOT TO SCALE

RAILING GENERAL NOTES

1. ALL RAILINGS SHALL BE FABRICATED AND ERECTED AS INDICATED ON THE PLANS.
2. RAILS SHALL BE PARALLEL TO THE GRADE OF THE ROADWAY. RAIL SECTIONS SHALL BE ATTACHED TO AS MANY POSTS AS POSSIBLE, BUT NOT LESS THAN TWO.
3. THE CENTER LINE OF ANY SPLICE AND/OR EXPANSION JOINT SHALL BE LOCATED AT LEAST 2'-0" AWAY FROM CENTER LINE OF A POST EXCEPT WHERE INDICATED OTHERWISE ON PLANS. EXPANSION AND/OR SPLICE JOINTS FOR EACH STRAND OF THREE STRAND RAILING SHALL BE PLACED IN THE SAME LOCATION AND IN THE SAME PANEL.
4. RAIL ELEMENTS SHALL BE STRUCTURAL TUBING IN ACCORDANCE WITH ASTM A500 GRADE B, A618 OR A501.
5. STEEL POSTS AND PLATES SHALL CONFORM TO ASTM A36 UNLESS OTHERWISE NOTED.
6. POSTS SHALL BE SET PERPENDICULAR TO TOP OF CURB. FOR POST SPACING SEE PLANS (MAXIMUM 10'-0" SPACING).
7. ALL STRUCTURAL STEEL INCLUDING FASTENERS SHALL BE HOT-DIP GALVANIZED AS PER ASTM A-123 AFTER FABRICATION, EXCEPT AS NOTED. ALL ANCHOR PLATES SHALL BE ATTACHED BEFORE GALVANIZING.
8. IN SETTING ANCHOR BOLTS BE SURE ENOUGH THREADS ARE EXPOSED SO THAT NUTS CAN BE COMPLETELY ATTACHED (4" MIN.).

REVISIONS:

DATE:	DESCRIPTION:	BY:

NVF AUBURN HEIGHTS STATE PARK
FARM LANE BRIDGE REPLACEMENT

RAILING DETAILS

SI

WALTER J. HOEY, III
LICENSE
No. 11204
DELAWARE
PROFESSIONAL ENGINEER
8/19/2021

CIVIL ENGINEER:
CENTURY ENGINEERING
CONSULTING ENGINEERS, SURVEYORS
550 BAY ROAD
DOVER, DELAWARE 19901

CONTRACT NO.: 175013.09

DESIGNED BY: CAP
DRAWN BY: MAZ
CHECKED BY: TSW
DATE: OCTOBER 2020
SCALE: AS NOTED
SHEET NO.: S637
CONTRACT NO.: